Canon

GX2000 series

Online Manual

English

Contents

Appendix. 13

Symbols Used in This Document. 14

Trademarks and Licenses. 15

Trademarks. 16

Licenses. 17

Main Components and Their Use. 43

Main Components. 44

Front View. 45

Rear View. 48

Inside View. 49

Operation Panel. 50

Using Touch Screen. 51

Entering Numbers, Letters, and Symbols. 55

Power Supply. 57

Turning the Printer On and Off. 58

Loading Paper. 60

Loading Plain Paper. 61

Loading Photo Paper. 67

Loading Envelopes. 72

Loading Originals. 77

Where to Load Originals. 78

Loading Originals on Platen. 80

Loading Documents in the ADF (Auto Document Feeder). 82

Loading Based on Use. 84

Supported Originals. 87

Refilling Ink Tanks. 89

Refilling Ink Tanks. 90

Checking Ink Level. 95

Restrictions. 96

Network Connection Tips (Windows/macOS). 98

Detect Same Printer Name. 99

Switching Printer's Connection to Network or Devices. 100

Wi-Fi Connection Assistant (Windows). 102

Wi-Fi Connection Assistant. 103

Starting Up Wi-Fi Connection Assistant. 104

Diagnosing and Repairing Network Settings. 105

Performing/Changing Network Settings. 106

Canon Wi-Fi Connection Assistant Screen. 107

Performing Network Settings. 111

Performing/Changing Wired LAN Connection (Ethernet Cable) Settings（Supported models only）. 112

Performing/Changing Wi-Fi Settings. 115

Assigning Printer Information. 120

List of Models Which Does Not Support Diagnosis and Repair Function. 121

List of Models Which Does Not Support IPv6 Configuration via USB Connection. 122

Wi-Fi Connection Assistant (macOS). 124

Wi-Fi Connection Assistant. 125

Starting Up Wi-Fi Connection Assistant. 126

Diagnosing and Repairing Network Settings. 127

List of Models Which Does Not Support Diagnosis and Repair Function. 128

Performing Maintenance Functions from the Printer. 129

Maintenance Procedure. 130

Printing the Nozzle Check Pattern. 132

Examining the Nozzle Check Pattern. 133

Cleaning the Print Head. 135

Deep Print Head Cleaning. 137

Aligning the Print Head. 139

Aligning the Print Head Manually. 141

Performing Maintenance Functions from Your Computer (macOS). 144

Opening Remote UI for Maintenance. 145

Cleaning the Print Heads. 146

Adjusting Print Head Position. 148

Cleaning. 149

Cleaning Paper Feed Rollers. 150

Cleaning Inside the Printer (Bottom Plate Cleaning). 152

Replacing the Maintenance Cartridge. 155
Replacing the Maintenance Cartridge. 156
Checking Maintenance Cartridge Status on Touch Screen. 161
Changing Settings. 162
Changing Printer Settings from Your Computer (Windows). 163
Changing the Print Options. 164
Changing the Printer Operation Mode. 165
Changing Printer Settings from Your Computer (macOS). 166
Managing the Printer Power. 167
Changing the Printer Operation Mode. 168
Changing Settings from Operation Panel. 169
Changing Settings from Operation Panel. 170
Setting Items on Operation Panel. 172
Security Settings. 173
Fax settings. 174
Print settings. 179
LAN settings. 181
Other printer settings. 187
Rearrange home screen icons. 190
Language selection. 191
Firmware update. 192
Administrator password settings. 193
User management settings. 195
Reset settings. 196
Feed settings. 198
Web service setup. 199
ECO settings. 200
Quiet setting. 202
System information. 204
Job management. 205
Registering Favorite Settings (My Presets). 206
Checking the Total Number of Uses of Printer. 209
Basic Information. 210
Safety. 211
Safety Precautions. 212

Regulatory Information. 216
WEEE. 220
Handling Precautions. 233
Legal Restrictions on Scanning/Copying. 234
Printer Handling Precautions. 235
Transporting Your Printer. 236
When Repairing, Lending, or Disposing of the Printer. 240
Keeping Print Quality High. 241
Ink Tips. 242
Specifications. 243
Product Specifications. 244
Supported Paper Sizes and Weights. 248
Paper Load Limit. 250
Supported Media Types. 252
Unsupported Media Types. 254
Handling Paper. 255
Economy Mode. 256
Printing. 257
Printing Photos and Documents. 258
Printing from Computer. 259
Printing from Application Software (Windows Printer Driver). 260
Basic Printing Setup. 261
Main Controls (Basic Settings Tab). 263
Basic Settings Tab Description. 264
Paper Settings on the Printer Driver and the Printer (Media Type). 272
Paper Settings on the Printer Driver and the Printer (Paper Size). 274
Printing on Postcards. 276
Setting Up Envelope Printing. 277
Registering a Frequently Used Printing Profile. 278
Set Media Type, Quality, etc. (Media/Quality Tab). 280
Media/Quality Tab Description. 281
Set the Layout of Printed Documents (Page Setup Tab). 285
Page Setup Tab Description. 286

Setting the Number of Copies and Printing Order. 298
Page Layout Printing. 300
Duplex Printing. 301
Perform maintenance or settings (Maintenance tab). 303
Maintenance Tab Description. 304
Cleaning the Print Heads. 309
Adjusting Print Head Position Automatically. 311
Adjusting Print Head Position Manually. 312
Printing a Nozzle Check Pattern. 315
Overview of the Printer Driver. 316
Canon IJ Printer Driver. 317
Opening Printer Driver's Setup Screen. 318
Canon IJ Status Monitor. 319
Instructions for Use (Printer Driver). 320
Maintenance Tab Description. 304
Canon IJ Status Monitor Description. 327
Updating the Driver. 330
Printing from Application Software (macOS AirPrint). 332
Printing. 333
Printing on Postcards. 336
Adding Printer. 337
How to Open Printer Settings Screen. 338
Displaying the Printing Status Screen. 339
Deleting the Undesired Print Job. 340
Removing Printer That Is No Longer Required from List of Printers. 341
Printing Using Canon Application Software. 342
Printing from Smartphone/Tablet. 343
Printing Hagaki and Envelopes. 344
Printing on Postcards. 276
Printing on Postcards. 336
Setting Up Envelope Printing. 277
Other Various Printing Features. 348
Paper Settings. 349
Copying. 352

Making Copies. 353
Setting Items for Copying. 356
Scanning. 359
Scanning and Saving to a Computer. 360
Scanning in Windows. 361
Scanning According to Item Type or Purpose (Scan Utility). 362
Scan Utility Features. 363
Scanning Easily (Auto Scan). 365
Scanning Documents and Photos. 366
Creating/Editing PDF Files. 367
Scanning Using Application Software (ScanGear). 371
What Is ScanGear (Scanner Driver)?. 372
Starting ScanGear (Scanner Driver). 374
Scanning in Basic Mode. 375
ScanGear (Scanner Driver) Screens. 378
Basic Mode Tab. 379
Advanced Mode Tab. 387
General Notes (Scanner Driver). 393
Scanning Tips. 395
Positioning Originals (Scanning from Computer). 396
Network Scan Settings. 397
Scanning in macOS. 401
Scanning According to Item Type or Purpose (IJ Scan Utility Lite). 402
IJ Scan Utility Lite Features. 403
Scanning Easily (Auto Scan). 405
Scanning Documents and Photos. 406
Scanning Tips. 407
Positioning Originals (Scanning from Computer). 408
Attaching Scanned Images to E-MAIL to Send. 411
Saving Scanned Images to Cloud Storage Folders. 412
Faxing. 413
Preparing for Faxing. 414

Connecting Telephone Line. 415
Setting Telephone Line Type. 419
Setting Receive Mode. 422
Setting Sender Information. 427
Sending Faxes. 434
Registering Recipients. 435
Registering Recipients Using Operation Panel of Printer. 436
Registering Fax/Telephone Number of Recipients. 437
Registering Recipients in Group Dial. 441
Changing Registered Information. 445
Deleting Registered Information. 447
Printing List of Registered Destinations. 448
Registering Recipients Using Speed Dial Utility2 (Windows). 449
Starting Up Speed Dial Utility2. 450
Speed Dial Utility2 Dialog box. 451
Saving Registered Telephone Directory on Printer to Your Computer. 453
Registering a Fax/telephone Number Using Speed Dial Utility2. 454
Changing a Fax/telephone Number Using Speed Dial Utility2. 456
Deleting a Fax/telephone Number Using Speed Dial Utility2. 458
Changing Sender Information Using Speed Dial Utility2. 459
Registering/Changing Rejected Number Using Speed Dial Utility2. 460
Registering Telephone Directory Has been Saved on Your Computer to Printer. 461
Registering Recipients Using Speed Dial Utility2 (macOS). 462
Starting Up Speed Dial Utility2. 463
Speed Dial Utility2 Dialog. 464
Saving Registered Telephone Directory on Printer to Your Computer. 466
Registering a Fax/telephone Number Using Speed Dial Utility2. 467
Changing a Fax/telephone Number Using Speed Dial Utility2. 469
Deleting a Fax/telephone Number Using Speed Dial Utility2. 471
Changing Sender Information Using Speed Dial Utility2. 472
Registering/Changing Rejected Number Using Speed Dial Utility2. 473
Registering Telephone Directory Has been Saved on Your Computer to Printer. 474
Sending Faxes Using Operation Panel of Printer. 475
Sending Faxes by Entering Fax/Telephone Number. 476
Resending Faxes (Redialing Busy Number). 480
Setting Items for Sending Faxes. 482

Sending Faxes from Computer (Windows). 484
Sending a FAX (Fax Driver). 485
Creating an Address Book (Fax Driver). 488
Edit or Remove a Recipient from an Address Book (Fax Driver). 492
Search for a Recipient in an Address Book (Fax Driver). 495
Cannot Send Faxes from Computer. 497
How to Open the Setting Screen of the Fax Driver. 499
General Notes (Fax Driver). 501
Sending Faxes from Computer (macOS). 502
Sending Faxes Using AirPrint. 503
General Notes (Fax Transmission Using AirPrint). 507
Receiving Faxes. 508
Receiving Faxes. 509
Changing Paper Settings. 514
Memory Reception. 516
Other Useful Fax Functions. 518
Document Stored in Printer's Memory. 519
Printing Document in Printer's Memory. 521
Deleting Document in Printer's Memory. 523
Forwarding Document in Printer's Memory to Shared Folder on Computer. 525
Frequently Asked Questions. 528
Network FAQ. 532
Network Communication Problems. 535
Cannot Find Printer on Network (Windows/macOS). 536
Cannot Find Printer on Network. 537
Cannot Proceed Beyond Printer Connection Screen (Cannot Find Printer Connected via USB). 542
Wireless Router Problems. 544
Network Key (Password) Unknown. 545
Printer Cannot Be Used After Replacing Wireless Router or Changed Router Settings. 547
Printer Settings/Smartphone/Tablet Troubles for Network. 549
Solve Network Troubles with The Printer's Diagnostic Functions. 550
Checking Network Information of Printer. 558
Printing Network Settings. 561
Restoring Printer's LAN Settings to Defaults. 571

Default Network Settings. 572
Connecting with Wireless Direct. 574
Problems While Printing (Scanning) from Smartphone/Tablet. 579
Cannot Print (Scan) from Smartphone/Tablet. 580
Printing Problems. 584
Printer Does Not Print. 585
Printer Does Not Pick Up or Feed the Paper/"No Paper" Error. 588
Resolving Print Quality Problems. 590
Ink Does Not Come Out/Blurry or Fuzzy/Inaccurate or Bleeding Colors/Streaks. 593
Printed in Black and White. 596
Lines Are Misaligned/Distorted. 597
Paper Is Smudged/Printed Surface Is Scratched/Ink Blots/Paper Curl. 598
Images Incomplete/Cannot Complete Printing. 602
Lines Incomplete or Missing (Windows). 603
Back of Paper Is Smudged. 604
Uneven or Streaked Colors. 605
Change to Offline (Windows). 606
Scanning Problems (Windows). 608
Scanning Problems. 609
Scanner Does Not Work. 610
ScanGear (Scanner Driver) Does Not Start. 611
Scanning Problems (macOS). 612
Scanning Problems. 613
Scanner Does Not Work. 614
Scanner Driver Does Not Start. 615
Faxing Problems. 616
Problems Sending Faxes. 617
Cannot Send a Fax. 618
Errors Often Occur When Send a Fax. 620
Problems Receiving Faxes/Cannot Print a Fax. 621
Cannot Print a Fax/"Fax received. Saved in memory." Appears. 622
Telephone Problems. 623
Cannot Dial. 624

Telephone Disconnects During a Call. 625
Poor Quality Fax Received. 626
Mechanical Problems. 627
Printer Does Not Turn On. 628
Printer Turns Off Unexpectedly or Repeatedly. 629
USB Connection Problems. 630
Wrong Language Appears in LCD. 632
Installation and Download Problems. 633
Failed to MP Drivers (Printer Driver) Installation (Windows). 634
Cannot Proceed Beyond Printer Connection Screen (Cannot Find Printer Connected via USB). 542
Updating MP Drivers (Printer Driver) in Network Environment (Windows). 637
Errors and Messages. 638
When Error Occurred. 639
Message Is Displayed. 641
Repairing Your Printer. 644
When Error Occurred. 639
List of Support Codes for Printer Errors. 651
What to Do When Paper Is Jammed. 653
Removing Jammed Paper inside Printer. 656
Removing Jammed Paper from Rear Side. 660
1003. 665
1200. 666
1368. 667
1496. 668
1723. 669
1724. 670
1725. 671
1726. 672
1727. 673
Cassette Is Not Installed (1876). 674
2110. 675
2200. 681

3252. 682
4103. 683
5100. 684
5212. 685
5213. 686
6000. 687
Message Is Displayed. 641

Appendix

- Online Manual
- Symbols Used in This Document
- Trademarks and Licenses

Symbols Used in This Document

Warning

Instructions that, if ignored, could result in death, serious personal injury, or property damage caused by incorrect operation of the equipment. These must be observed for safe operation.

Caution

Instructions that, if ignored, could result in personal injury or property damage caused by incorrect operation of the equipment. These must be observed for safe operation.

Important

Instructions including important information that must be observed to avoid damage and injury or improper use of the product. Be sure to read these instructions.

Note

Instructions including notes for operation and additional explanations.

Basics

Instructions explaining basic operations of your product.

Note

- Icons may vary depending on your product.

Trademarks and Licenses

- Trademarks
- Licenses

Trademarks

- Microsoft is a registered trademark of Microsoft Corporation.
- Windows is a trademark or registered trademark of Microsoft Corporation in the U.S. and/or other countries.
- Windows Vista is a trademark or registered trademark of Microsoft Corporation in the U.S. and/or other countries.
- Microsoft Edge and Excel are either trademarks or registered trademarks of Microsoft Corporation in the U.S. and/or other countries.
- Internet Explorer is a trademark or registered trademark of Microsoft Corporation in the U.S. and/or other countries.
- Microsoft Store is a trademark or registered trademark of Microsoft Corporation in the U.S. and/or other countries.
- This device incorporates exFAT technology licensed from Microsoft.
- Mac, Mac OS, macOS, OS X, AirPort, App Store, AirPrint, the AirPrint logo, Safari, Bonjour, iPad, iPad Air, iPad mini, iPadOS, iPhone and iPod touch are trademarks of Apple Inc., registered in the U.S. and other countries.
- IOS is a trademark or registered trademark of Cisco in the U.S. and other countries and is used under license.
- Google Cloud Print, Google Chrome, Chrome OS, Chromebook, Android, Google Drive, Google Apps and Google Analytics are either registered trademarks or trademarks of Google Inc. Google Play and Google Play Logo are trademarks of Google LLC.
- Adobe, Acrobat, Flash, Photoshop, Illustrator, Adobe RGB and Adobe RGB (1998) are either registered trademarks or trademarks of Adobe Systems Incorporated in the United States and/or other countries.
- Adobe, Acrobat, Flash, Photoshop, Photoshop Elements, Lightroom, Adobe RGB and Adobe RGB (1998) are either registered trademarks or trademarks of Adobe Systems Incorporated in the United States and/or other countries.
- Amazon, Echo and Alexa are trademarks of Amazon.com, Inc. or its affiliates.
- Google, Google Home, and Android are trademarks of Google LLC.
- LINE is a registered trademark or trademark of LINE Corporation.
- LINE Clova is a registered trademark of LINE Corporation.
- Google Docs, and Google Drive are trademarks of Google LLC.
- App Store is a trademark of Apple Inc., registered in the U.S. and other countries.
- Bluetooth is a trademark of Bluetooth SIG, Inc., U.S.A. and licensed to Canon Inc.
- QR Code is a registered trademark of DENSO WAVE INCORPORATED in Japan and in other countries.
- The Mopria® word mark and the Mopria® Logo are registered and/or unregistered trademarks of Mopria Alliance, Inc. in the United States and other countries. Unauthorized use is strictly prohibited.
- Mozilla Firefox is a trademark or registered trademark of Mozilla Foundation in the U.S. and/or other countries.
- Wi-Fi, WPA, WPA2 and WPA3 are either registered trademarks or trademarks of Wi-Fi Alliance.
- All other company names and products mentioned in this guide may be registered trademarks or trademarks of their respective companies.

Licenses

Copyright (c) 2003-2015 Apple Inc. All rights reserved.

Redistribution and use in source and binary forms, with or without modification, are permitted provided that the following conditions are met:

1. Redistributions of source code must retain the above copyright notice, this list of conditions and the following disclaimer.
2. Redistributions in binary form must reproduce the above copyright notice, this list of conditions and the following disclaimer in the documentation and/or other materials provided with the distribution.
3. Neither the name of Apple Inc. ("Apple") nor the names of its contributors may be used to endorse or promote products derived from this software without specific prior written permission.

THIS SOFTWARE IS PROVIDED BY APPLE AND ITS CONTRIBUTORS "AS IS" AND ANY EXPRESS OR IMPLIED WARRANTIES, INCLUDING, BUT NOT LIMITED TO, THE IMPLIED WARRANTIES OF MERCHANTABILITY AND FITNESS FOR A PARTICULAR PURPOSE ARE DISCLAIMED. IN NO EVENT SHALL APPLE OR ITS CONTRIBUTORS BE LIABLE FOR ANY DIRECT, INDIRECT, INCIDENTAL, SPECIAL, EXEMPLARY, OR CONSEQUENTIAL DAMAGES (INCLUDING, BUT NOT LIMITED TO, PROCUREMENT OF SUBSTITUTE GOODS OR SERVICES; LOSS OF USE, DATA, OR PROFITS; OR BUSINESS INTERRUPTION) HOWEVER CAUSED AND ON ANY THEORY OF LIABILITY, WHETHER IN CONTRACT, STRICT LIABILITY, OR TORT (INCLUDING NEGLIGENCE OR OTHERWISE) ARISING IN ANY WAY OUT OF THE USE OF THIS SOFTWARE, EVEN IF ADVISED OF THE POSSIBILITY OF SUCH DAMAGE.

Apache License

Version 2.0, January 2004

http://www.apache.org/licenses/
TERMS AND CONDITIONS FOR USE, REPRODUCTION, AND DISTRIBUTION

1. Definitions.

   "License" shall mean the terms and conditions for use, reproduction, and distribution as defined by Sections 1 through 9 of this document.

   "Licensor" shall mean the copyright owner or entity authorized by the copyright owner that is granting the License.

   "Legal Entity" shall mean the union of the acting entity and all other entities that control, are controlled by, or are under common control with that entity. For the purposes of this definition, "control" means (i) the power, direct or indirect, to cause the direction or management of such entity, whether by contract or otherwise, or (ii) ownership of fifty percent (50%) or more of the outstanding shares, or (iii) beneficial ownership of such entity.

   "You" (or "Your") shall mean an individual or Legal Entity exercising permissions granted by this License.

   "Source" form shall mean the preferred form for making modifications, including but not limited to software source code, documentation source, and configuration files.

"Object" form shall mean any form resulting from mechanical transformation or translation of a Source form, including but not limited to compiled object code, generated documentation, and conversions to other media types.

"Work" shall mean the work of authorship, whether in Source or Object form, made available under the License, as indicated by a copyright notice that is included in or attached to the work (an example is provided in the Appendix below).

"Derivative Works" shall mean any work, whether in Source or Object form, that is based on (or derived from) the Work and for which the editorial revisions, annotations, elaborations, or other modifications represent, as a whole, an original work of authorship. For the purposes of this License, Derivative Works shall not include works that remain separable from, or merely link (or bind by name) to the interfaces of, the Work and Derivative Works thereof.

"Contribution" shall mean any work of authorship, including the original version of the Work and any modifications or additions to that Work or Derivative Works thereof, that is intentionally submitted to Licensor for inclusion in the Work by the copyright owner or by an individual or Legal Entity authorized to submit on behalf of the copyright owner. For the purposes of this definition, "submitted" means any form of electronic, verbal, or written communication sent to the Licensor or its representatives, including but not limited to communication on electronic mailing lists, source code control systems, and issue tracking systems that are managed by, or on behalf of, the Licensor for the purpose of discussing and improving the Work, but excluding communication that is conspicuously marked or otherwise designated in writing by the copyright owner as "Not a Contribution."

"Contributor" shall mean Licensor and any individual or Legal Entity on behalf of whom a Contribution has been received by Licensor and subsequently incorporated within the Work.

2. Grant of Copyright License. Subject to the terms and conditions of this License, each Contributor hereby grants to You a perpetual, worldwide, non-exclusive, no-charge, royalty-free, irrevocable copyright license to reproduce, prepare Derivative Works of, publicly display, publicly perform, sublicense, and distribute the Work and such Derivative Works in Source or Object form.
3. Grant of Patent License. Subject to the terms and conditions of this License, each Contributor hereby grants to You a perpetual, worldwide, non-exclusive, no-charge, royalty-free, irrevocable (except as stated in this section) patent license to make, have made, use, offer to sell, sell, import, and otherwise transfer the Work, where such license applies only to those patent claims licensable by such Contributor that are necessarily infringed by their Contribution(s) alone or by combination of their Contribution(s) with the Work to which such Contribution(s) was submitted. If You institute patent litigation against any entity (including a cross-claim or counterclaim in a lawsuit) alleging that the Work or a Contribution incorporated within the Work constitutes direct or contributory patent infringement, then any patent licenses granted to You under this License for that Work shall terminate as of the date such litigation is filed.
4. Redistribution. You may reproduce and distribute copies of the Work or Derivative Works thereof in any medium, with or without modifications, and in Source or Object form, provided that You meet the following conditions:

    1. You must give any other recipients of the Work or Derivative Works a copy of this License; and
    2. You must cause any modified files to carry prominent notices stating that You changed the files; and

3. You must retain, in the Source form of any Derivative Works that You distribute, all copyright, patent, trademark, and attribution notices from the Source form of the Work, excluding those notices that do not pertain to any part of the Derivative Works; and
4. If the Work includes a "NOTICE" text file as part of its distribution, then any Derivative Works that You distribute must include a readable copy of the attribution notices contained within such NOTICE file, excluding those notices that do not pertain to any part of the Derivative Works, in at least one of the following places: within a NOTICE text file distributed as part of the Derivative Works; within the Source form or documentation, if provided along with the Derivative Works; or, within a display generated by the Derivative Works, if and wherever such third-party notices normally appear. The contents of the NOTICE file are for informational purposes only and do not modify the License. You may add Your own attribution notices within Derivative Works that You distribute, alongside or as an addendum to the NOTICE text from the Work, provided that such additional attribution notices cannot be construed as modifying the License.

   You may add Your own copyright statement to Your modifications and may provide additional or different license terms and conditions for use, reproduction, or distribution of Your modifications, or for any such Derivative Works as a whole, provided Your use, reproduction, and distribution of the Work otherwise complies with the conditions stated in this License.

5. Submission of Contributions. Unless You explicitly state otherwise, any Contribution intentionally submitted for inclusion in the Work by You to the Licensor shall be under the terms and conditions of this License, without any additional terms or conditions. Notwithstanding the above, nothing herein shall supersede or modify the terms of any separate license agreement you may have executed with Licensor regarding such Contributions.
6. Trademarks. This License does not grant permission to use the trade names, trademarks, service marks, or product names of the Licensor, except as required for reasonable and customary use in describing the origin of the Work and reproducing the content of the NOTICE file.
7. Disclaimer of Warranty. Unless required by applicable law or agreed to in writing, Licensor provides the Work (and each Contributor provides its Contributions) on an "AS IS" BASIS, WITHOUT WARRANTIES OR CONDITIONS OF ANY KIND, either express or implied, including, without limitation, any warranties or conditions of TITLE, NON-INFRINGEMENT, MERCHANTABILITY, or FITNESS FOR A PARTICULAR PURPOSE. You are solely responsible for determining the appropriateness of using or redistributing the Work and assume any risks associated with Your exercise of permissions under this License.
8. Limitation of Liability. In no event and under no legal theory, whether in tort (including negligence), contract, or otherwise, unless required by applicable law (such as deliberate and grossly negligent acts) or agreed to in writing, shall any Contributor be liable to You for damages, including any direct, indirect, special, incidental, or consequential damages of any character arising as a result of this License or out of the use or inability to use the Work (including but not limited to damages for loss of goodwill, work stoppage, computer failure or malfunction, or any and all other commercial damages or losses), even if such Contributor has been advised of the possibility of such damages.
9. Accepting Warranty or Additional Liability. While redistributing the Work or Derivative Works thereof, You may choose to offer, and charge a fee for, acceptance of support, warranty, indemnity, or other liability obligations and/or rights consistent with this License. However, in accepting such obligations, You may act only on Your own behalf and on Your sole responsibility, not on behalf of any other Contributor, and only if You agree to indemnify, defend, and hold each Contributor harmless for any liability incurred by, or claims asserted against, such Contributor by reason of your accepting any

such warranty or additional liability.
END OF TERMS AND CONDITIONS

---- Part 1: CMU/UCD copyright notice: (BSD like) -----

Copyright 1989, 1991, 1992 by Carnegie Mellon University

Derivative Work - 1996, 1998-2000

Copyright 1996, 1998-2000 The Regents of the University of California

All Rights Reserved

Permission to use, copy, modify and distribute this software and its documentation for any purpose and without fee is hereby granted, provided that the above copyright notice appears in all copies and that both that copyright notice and this permission notice appear in supporting documentation, and that the name of CMU and The Regents of the University of California not be used in advertising or publicity pertaining to distribution of the software without specific written permission.

CMU AND THE REGENTS OF THE UNIVERSITY OF CALIFORNIA DISCLAIM ALL WARRANTIES WITH REGARD TO THIS SOFTWARE, INCLUDING ALL IMPLIED WARRANTIES OF MERCHANTABILITY AND FITNESS. IN NO EVENT SHALL CMU OR THE REGENTS OF THE UNIVERSITY OF CALIFORNIA BE LIABLE FOR ANY SPECIAL, INDIRECT OR CONSEQUENTIAL DAMAGES OR ANY DAMAGES WHATSOEVER RESULTING FROM THE LOSS OF USE, DATA OR PROFITS, WHETHER IN AN ACTION OF CONTRACT, NEGLIGENCE OR OTHER TORTIOUS ACTION, ARISING OUT OF OR IN CONNECTION WITH THE USE OR PERFORMANCE OF THIS SOFTWARE.

---- Part 2: Networks Associates Technology, Inc copyright notice (BSD) -----

Copyright (c) 2001-2003, Networks Associates Technology, Inc

All rights reserved.

Redistribution and use in source and binary forms, with or without modification, are permitted provided that the following conditions are met:

* Redistributions of source code must retain the above copyright notice, this list of conditions and the following disclaimer.
* Redistributions in binary form must reproduce the above copyright notice, this list of conditions and the following disclaimer in the documentation and/or other materials provided with the distribution.
* Neither the name of the Networks Associates Technology, Inc nor the names of its contributors may be used to endorse or promote products derived from this software without specific prior written permission.

THIS SOFTWARE IS PROVIDED BY THE COPYRIGHT HOLDERS AND CONTRIBUTORS ``AS IS'' AND ANY EXPRESS OR IMPLIED WARRANTIES, INCLUDING, BUT NOT LIMITED TO, THE IMPLIED WARRANTIES OF MERCHANTABILITY AND FITNESS FOR A PARTICULAR PURPOSE ARE DISCLAIMED. IN NO EVENT SHALL THE COPYRIGHT HOLDERS OR CONTRIBUTORS BE LIABLE FOR ANY DIRECT, INDIRECT, INCIDENTAL, SPECIAL, EXEMPLARY, OR CONSEQUENTIAL DAMAGES (INCLUDING, BUT NOT LIMITED TO, PROCUREMENT OF SUBSTITUTE GOODS OR SERVICES; LOSS OF USE, DATA, OR PROFITS; OR BUSINESS INTERRUPTION) HOWEVER CAUSED AND ON ANY THEORY OF LIABILITY, WHETHER IN CONTRACT, STRICT LIABILITY, OR TORT (INCLUDING NEGLIGENCE OR OTHERWISE) ARISING IN ANY WAY OUT OF THE USE OF THIS SOFTWARE, EVEN IF ADVISED OF THE POSSIBILITY OF SUCH DAMAGE.

---- Part 3: Cambridge Broadband Ltd. copyright notice (BSD) -----

Portions of this code are copyright (c) 2001-2003, Cambridge Broadband Ltd.

All rights reserved.

Redistribution and use in source and binary forms, with or without modification, are permitted provided that the following conditions are met:

* Redistributions of source code must retain the above copyright notice, this list of conditions and the following disclaimer.
* Redistributions in binary form must reproduce the above copyright notice, this list of conditions and the following disclaimer in the documentation and/or other materials provided with the distribution.
* The name of Cambridge Broadband Ltd. may not be used to endorse or promote products derived from this software without specific prior written permission.

THIS SOFTWARE IS PROVIDED BY THE COPYRIGHT HOLDER ``AS IS" AND ANY EXPRESS OR IMPLIED WARRANTIES, INCLUDING, BUT NOT LIMITED TO, THE IMPLIED WARRANTIES OF MERCHANTABILITY AND FITNESS FOR A PARTICULAR PURPOSE ARE DISCLAIMED. IN NO EVENT SHALL THE COPYRIGHT HOLDER BE LIABLE FOR ANY DIRECT, INDIRECT, INCIDENTAL, SPECIAL, EXEMPLARY, OR CONSEQUENTIAL DAMAGES (INCLUDING, BUT NOT LIMITED TO, PROCUREMENT OF SUBSTITUTE GOODS OR SERVICES; LOSS OF USE, DATA, OR PROFITS; OR BUSINESS INTERRUPTION) HOWEVER CAUSED AND ON ANY THEORY OF LIABILITY, WHETHER IN CONTRACT, STRICT LIABILITY, OR TORT (INCLUDING NEGLIGENCE OR OTHERWISE) ARISING IN ANY WAY OUT OF THE USE OF THIS SOFTWARE, EVEN IF ADVISED OF THE POSSIBILITY OF SUCH DAMAGE.

---- Part 4: Sun Microsystems, Inc. copyright notice (BSD) -----

Copyright c 2003 Sun Microsystems, Inc., 4150 Network Circle, Santa Clara, California 95054, U.S.A. All rights reserved.

Use is subject to license terms below.

This distribution may include materials developed by third parties.

Sun, Sun Microsystems, the Sun logo and Solaris are trademarks or registered trademarks of Sun Microsystems, Inc. in the U.S. and other countries.

Redistribution and use in source and binary forms, with or without modification, are permitted provided that the following conditions are met:

* Redistributions of source code must retain the above copyright notice, this list of conditions and the following disclaimer.
* Redistributions in binary form must reproduce the above copyright notice, this list of conditions and the following disclaimer in the documentation and/or other materials provided with the distribution.
* Neither the name of the Sun Microsystems, Inc. nor the names of its contributors may be used to endorse or promote products derived from this software without specific prior written permission.

THIS SOFTWARE IS PROVIDED BY THE COPYRIGHT HOLDERS AND CONTRIBUTORS ``AS IS" AND ANY EXPRESS OR IMPLIED WARRANTIES, INCLUDING, BUT NOT LIMITED TO, THE IMPLIED WARRANTIES OF MERCHANTABILITY AND FITNESS FOR A PARTICULAR PURPOSE ARE DISCLAIMED. IN NO EVENT SHALL THE COPYRIGHT HOLDERS OR CONTRIBUTORS BE LIABLE FOR ANY DIRECT, INDIRECT, INCIDENTAL, SPECIAL, EXEMPLARY, OR CONSEQUENTIAL DAMAGES (INCLUDING, BUT NOT LIMITED TO, PROCUREMENT OF SUBSTITUTE GOODS OR

SERVICES; LOSS OF USE, DATA, OR PROFITS; OR BUSINESS INTERRUPTION) HOWEVER CAUSED AND ON ANY THEORY OF LIABILITY, WHETHER IN CONTRACT, STRICT LIABILITY, OR TORT (INCLUDING NEGLIGENCE OR OTHERWISE) ARISING IN ANY WAY OUT OF THE USE OF THIS SOFTWARE, EVEN IF ADVISED OF THE POSSIBILITY OF SUCH DAMAGE.

---- Part 5: Sparta, Inc copyright notice (BSD) -----

Copyright (c) 2003-2012, Sparta, Inc

All rights reserved.

Redistribution and use in source and binary forms, with or without modification, are permitted provided that the following conditions are met:

* Redistributions of source code must retain the above copyright notice, this list of conditions and the following disclaimer.
* Redistributions in binary form must reproduce the above copyright notice, this list of conditions and the following disclaimer in the documentation and/or other materials provided with the distribution.
* Neither the name of Sparta, Inc nor the names of its contributors may be used to endorse or promote products derived from this software without specific prior written permission.

THIS SOFTWARE IS PROVIDED BY THE COPYRIGHT HOLDERS AND CONTRIBUTORS ``AS IS'' AND ANY EXPRESS OR IMPLIED WARRANTIES, INCLUDING, BUT NOT LIMITED TO, THE IMPLIED WARRANTIES OF MERCHANTABILITY AND FITNESS FOR A PARTICULAR PURPOSE ARE DISCLAIMED. IN NO EVENT SHALL THE COPYRIGHT HOLDERS OR CONTRIBUTORS BE LIABLE FOR ANY DIRECT, INDIRECT, INCIDENTAL, SPECIAL, EXEMPLARY, OR CONSEQUENTIAL DAMAGES (INCLUDING, BUT NOT LIMITED TO, PROCUREMENT OF SUBSTITUTE GOODS OR SERVICES; LOSS OF USE, DATA, OR PROFITS; OR BUSINESS INTERRUPTION) HOWEVER CAUSED AND ON ANY THEORY OF LIABILITY, WHETHER IN CONTRACT, STRICT LIABILITY, OR TORT (INCLUDING NEGLIGENCE OR OTHERWISE) ARISING IN ANY WAY OUT OF THE USE OF THIS SOFTWARE, EVEN IF ADVISED OF THE POSSIBILITY OF SUCH DAMAGE.

---- Part 6: Cisco/BUPTNIC copyright notice (BSD) -----

Copyright (c) 2004, Cisco, Inc and Information Network Center of Beijing University of Posts and Telecommunications.

All rights reserved.

Redistribution and use in source and binary forms, with or without modification, are permitted provided that the following conditions are met:

* Redistributions of source code must retain the above copyright notice, this list of conditions and the following disclaimer.
* Redistributions in binary form must reproduce the above copyright notice, this list of conditions and the following disclaimer in the documentation and/or other materials provided with the distribution.
* Neither the name of Cisco, Inc, Beijing University of Posts and Telecommunications, nor the names of their contributors may be used to endorse or promote products derived from this software without specific prior written permission.

THIS SOFTWARE IS PROVIDED BY THE COPYRIGHT HOLDERS AND CONTRIBUTORS ``AS IS'' AND ANY EXPRESS OR IMPLIED WARRANTIES, INCLUDING, BUT NOT LIMITED TO, THE IMPLIED WARRANTIES OF MERCHANTABILITY AND FITNESS FOR A PARTICULAR PURPOSE

ARE DISCLAIMED. IN NO EVENT SHALL THE COPYRIGHT HOLDERS OR CONTRIBUTORS BE LIABLE FOR ANY DIRECT, INDIRECT, INCIDENTAL, SPECIAL, EXEMPLARY, OR CONSEQUENTIAL DAMAGES (INCLUDING, BUT NOT LIMITED TO, PROCUREMENT OF SUBSTITUTE GOODS OR SERVICES; LOSS OF USE, DATA, OR PROFITS; OR BUSINESS INTERRUPTION) HOWEVER CAUSED AND ON ANY THEORY OF LIABILITY, WHETHER IN CONTRACT, STRICT LIABILITY, OR TORT (INCLUDING NEGLIGENCE OR OTHERWISE) ARISING IN ANY WAY OUT OF THE USE OF THIS SOFTWARE, EVEN IF ADVISED OF THE POSSIBILITY OF SUCH DAMAGE.

---- Part 7: Fabasoft R&D Software GmbH & Co KG copyright notice (BSD) -----

Copyright (c) Fabasoft R&D Software GmbH & Co KG, 2003 oss@fabasoft.com

Author: Bernhard Penz <bernhard.penz@fabasoft.com>

Redistribution and use in source and binary forms, with or without modification, are permitted provided that the following conditions are met:

* Redistributions of source code must retain the above copyright notice, this list of conditions and the following disclaimer.
* Redistributions in binary form must reproduce the above copyright notice, this list of conditions and the following disclaimer in the documentation and/or other materials provided with the distribution.
* The name of Fabasoft R&D Software GmbH & Co KG or any of its subsidiaries, brand or product names may not be used to endorse or promote products derived from this software without specific prior written permission.

THIS SOFTWARE IS PROVIDED BY THE COPYRIGHT HOLDER ``AS IS'' AND ANY EXPRESS OR IMPLIED WARRANTIES, INCLUDING, BUT NOT LIMITED TO, THE IMPLIED WARRANTIES OF MERCHANTABILITY AND FITNESS FOR A PARTICULAR PURPOSE ARE DISCLAIMED. IN NO EVENT SHALL THE COPYRIGHT HOLDER BE LIABLE FOR ANY DIRECT, INDIRECT, INCIDENTAL, SPECIAL, EXEMPLARY, OR CONSEQUENTIAL DAMAGES (INCLUDING, BUT NOT LIMITED TO, PROCUREMENT OF SUBSTITUTE GOODS OR SERVICES; LOSS OF USE, DATA, OR PROFITS; OR BUSINESS INTERRUPTION) HOWEVER CAUSED AND ON ANY THEORY OF LIABILITY, WHETHER IN CONTRACT, STRICT LIABILITY, OR TORT (INCLUDING NEGLIGENCE OR OTHERWISE) ARISING IN ANY WAY OUT OF THE USE OF THIS SOFTWARE, EVEN IF ADVISED OF THE POSSIBILITY OF SUCH DAMAGE.

---- Part 8: Apple Inc. copyright notice (BSD) -----

Copyright (c) 2007 Apple Inc. All rights reserved.

Redistribution and use in source and binary forms, with or without modification, are permitted provided that the following conditions are met:

1. Redistributions of source code must retain the above copyright notice, this list of conditions and the following disclaimer.
2. Redistributions in binary form must reproduce the above copyright notice, this list of conditions and the following disclaimer in the documentation and/or other materials provided with the distribution.
3. Neither the name of Apple Inc. ("Apple") nor the names of its contributors may be used to endorse or promote products derived from this software without specific prior written permission.

THIS SOFTWARE IS PROVIDED BY APPLE AND ITS CONTRIBUTORS "AS IS" AND ANY EXPRESS OR IMPLIED WARRANTIES, INCLUDING, BUT NOT LIMITED TO, THE IMPLIED WARRANTIES

OF MERCHANTABILITY AND FITNESS FOR A PARTICULAR PURPOSE ARE DISCLAIMED. IN NO EVENT SHALL APPLE OR ITS CONTRIBUTORS BE LIABLE FOR ANY DIRECT, INDIRECT, INCIDENTAL, SPECIAL, EXEMPLARY, OR CONSEQUENTIAL DAMAGES (INCLUDING, BUT NOT LIMITED TO, PROCUREMENT OF SUBSTITUTE GOODS OR SERVICES; LOSS OF USE, DATA, OR PROFITS; OR BUSINESS INTERRUPTION) HOWEVER CAUSED AND ON ANY THEORY OF LIABILITY, WHETHER IN CONTRACT, STRICT LIABILITY, OR TORT (INCLUDING NEGLIGENCE OR OTHERWISE) ARISING IN ANY WAY OUT OF THE USE OF THIS SOFTWARE, EVEN IF ADVISED OF THE POSSIBILITY OF SUCH DAMAGE.

---- Part 9: ScienceLogic, LLC copyright notice (BSD) -----

Copyright (c) 2009, ScienceLogic, LLC

All rights reserved.

Redistribution and use in source and binary forms, with or without modification, are permitted provided that the following conditions are met:

* Redistributions of source code must retain the above copyright notice, this list of conditions and the following disclaimer.
* Redistributions in binary form must reproduce the above copyright notice, this list of conditions and the following disclaimer in the documentation and/or other materials provided with the distribution.
* Neither the name of ScienceLogic, LLC nor the names of its contributors may be used to endorse or promote products derived from this software without specific prior written permission.

THIS SOFTWARE IS PROVIDED BY THE COPYRIGHT HOLDERS AND CONTRIBUTORS "AS IS" AND ANY EXPRESS OR IMPLIED WARRANTIES, INCLUDING, BUT NOT LIMITED TO, THE IMPLIED WARRANTIES OF MERCHANTABILITY AND FITNESS FOR A PARTICULAR PURPOSE ARE DISCLAIMED. IN NO EVENT SHALL THE COPYRIGHT HOLDERS OR CONTRIBUTORS BE LIABLE FOR ANY DIRECT, INDIRECT, INCIDENTAL, SPECIAL, EXEMPLARY, OR CONSEQUENTIAL DAMAGES (INCLUDING, BUT NOT LIMITED TO, PROCUREMENT OF SUBSTITUTE GOODS OR SERVICES; LOSS OF USE, DATA, OR PROFITS; OR BUSINESS INTERRUPTION) HOWEVER CAUSED AND ON ANY THEORY OF LIABILITY, WHETHER IN CONTRACT, STRICT LIABILITY, OR TORT (INCLUDING NEGLIGENCE OR OTHERWISE) ARISING IN ANY WAY OUT OF THE USE OF THIS SOFTWARE, EVEN IF ADVISED OF THE POSSIBILITY OF SUCH DAMAGE.

---- Part 10: Lennart Poettering copyright notice (BSD-like) -----

Copyright 2010 Lennart Poettering

Permission is hereby granted, free of charge, to any person
obtaining a copy of this software and associated documentation files
(the "Software"), to deal in the Software without restriction,
including without limitation the rights to use, copy, modify, merge,
publish, distribute, sublicense, and/or sell copies of the Software,
and to permit persons to whom the Software is furnished to do so,
subject to the following conditions:

The above copyright notice and this permission notice shall be
included in all copies or substantial portions of the Software.

THE SOFTWARE IS PROVIDED "AS IS", WITHOUT WARRANTY OF ANY KIND,
EXPRESS OR IMPLIED, INCLUDING BUT NOT LIMITED TO THE WARRANTIES OF
MERCHANTABILITY, FITNESS FOR A PARTICULAR PURPOSE AND
NONINFRINGEMENT. IN NO EVENT SHALL THE AUTHORS OR COPYRIGHT HOLDERS
BE LIABLE FOR ANY CLAIM, DAMAGES OR OTHER LIABILITY, WHETHER IN AN
ACTION OF CONTRACT, TORT OR OTHERWISE, ARISING FROM, OUT OF OR IN
CONNECTION WITH THE SOFTWARE OR THE USE OR OTHER DEALINGS IN THE
SOFTWARE.

---- Part 11: IETF copyright notice (BSD) -----

Copyright (c) 2013 IETF Trust and the persons identified as authors of
the code. All rights reserved.

Redistribution and use in source and binary forms, with or without
modification, are permitted provided that the following conditions are
met:

* Redistributions of source code must retain the above copyright notice,
this list of conditions and the following disclaimer.

* Redistributions in binary form must reproduce the above copyright
notice, this list of conditions and the following disclaimer in the
documentation and/or other materials provided with the distribution.

* Neither the name of Internet Society, IETF or IETF Trust, nor the
names of specific contributors, may be used to endorse or promote
products derived from this software without specific prior written
permission.

THIS SOFTWARE IS PROVIDED BY THE COPYRIGHT HOLDERS AND CONTRIBUTORS "AS
IS" AND ANY EXPRESS OR IMPLIED WARRANTIES, INCLUDING, BUT NOT LIMITED
TO, THE IMPLIED WARRANTIES OF MERCHANTABILITY AND FITNESS FOR A
PARTICULAR PURPOSE ARE DISCLAIMED. IN NO EVENT SHALL THE COPYRIGHT OWNER
OR CONTRIBUTORS BE LIABLE FOR ANY DIRECT, INDIRECT, INCIDENTAL, SPECIAL,
EXEMPLARY, OR CONSEQUENTIAL DAMAGES (INCLUDING, BUT NOT LIMITED TO,
PROCUREMENT OF SUBSTITUTE GOODS OR SERVICES; LOSS OF USE, DATA, OR
PROFITS; OR BUSINESS INTERRUPTION) HOWEVER CAUSED AND ON ANY THEORY OF
LIABILITY, WHETHER IN CONTRACT, STRICT LIABILITY, OR TORT (INCLUDING
NEGLIGENCE OR OTHERWISE) ARISING IN ANY WAY OUT OF THE USE OF THIS
SOFTWARE, EVEN IF ADVISED OF THE POSSIBILITY OF SUCH DAMAGE.

---- Part 12: Arista Networks copyright notice (BSD) ----

Copyright (c) 2013, Arista Networks, Inc.

All rights reserved.

Redistribution and use in source and binary forms, with or without modification, are permitted provided that the following conditions are met:

* Redistributions of source code must retain the above copyright notice, this list of conditions and the following disclaimer.

* Redistributions in binary form must reproduce the above copyright notice, this list of conditions and the following disclaimer in the documentation and/or other materials provided with the distribution.

* Neither the name of Arista Networks, Inc. nor the names of its contributors may be used to endorse or promote products derived from this software without specific prior written permission.

THIS SOFTWARE IS PROVIDED BY THE COPYRIGHT HOLDERS AND CONTRIBUTORS "AS IS" AND ANY EXPRESS OR IMPLIED WARRANTIES, INCLUDING, BUT NOT LIMITED TO, THE IMPLIED WARRANTIES OF MERCHANTABILITY AND FITNESS FOR A PARTICULAR PURPOSE ARE DISCLAIMED. IN NO EVENT SHALL THE COPYRIGHT HOLDERS OR CONTRIBUTORS BE LIABLE FOR ANY DIRECT, INDIRECT, INCIDENTAL, SPECIAL, EXEMPLARY, OR CONSEQUENTIAL DAMAGES (INCLUDING, BUT NOT LIMITED TO, PROCUREMENT OF SUBSTITUTE GOODS OR SERVICES; LOSS OF USE, DATA, OR PROFITS; OR BUSINESS INTERRUPTION) HOWEVER CAUSED AND ON ANY THEORY OF LIABILITY, WHETHER IN CONTRACT, STRICT LIABILITY, OR TORT (INCLUDING NEGLIGENCE OR OTHERWISE) ARISING IN ANY WAY OUT OF THE USE OF THIS SOFTWARE, EVEN IF ADVISED OF THE POSSIBILITY OF SUCH DAMAGE.

---- Part 13: VMware, Inc. copyright notice (BSD) -----

Copyright (c) 2016, VMware, Inc.

All rights reserved.

Redistribution and use in source and binary forms, with or without modification, are permitted provided that the following conditions are met:

* Redistributions of source code must retain the above copyright notice, this list of conditions and the following disclaimer.

* Redistributions in binary form must reproduce the above copyright notice, this list of conditions and the following disclaimer in the documentation and/or other materials provided with the distribution.

* Neither the name of VMware, Inc. nor the names of its contributors may be used to endorse or promote products derived from this software without specific prior written permission.

THIS SOFTWARE IS PROVIDED BY THE COPYRIGHT HOLDERS AND CONTRIBUTORS "AS IS" AND ANY EXPRESS OR IMPLIED WARRANTIES, INCLUDING, BUT NOT LIMITED TO, THE IMPLIED WARRANTIES OF MERCHANTABILITY AND FITNESS FOR A PARTICULAR PURPOSE ARE DISCLAIMED. IN NO EVENT SHALL THE COPYRIGHT HOLDERS OR CONTRIBUTORS BE LIABLE FOR ANY DIRECT, INDIRECT, INCIDENTAL, SPECIAL, EXEMPLARY, OR CONSEQUENTIAL DAMAGES (INCLUDING, BUT NOT LIMITED TO, PROCUREMENT OF SUBSTITUTE GOODS OR SERVICES; LOSS OF USE, DATA, OR PROFITS; OR BUSINESS INTERRUPTION) HOWEVER CAUSED AND ON ANY THEORY OF LIABILITY, WHETHER IN CONTRACT, STRICT LIABILITY, OR TORT (INCLUDING NEGLIGENCE OR OTHERWISE) ARISING IN ANY WAY OUT OF THE USE OF THIS SOFTWARE, EVEN IF ADVISED OF THE POSSIBILITY OF SUCH DAMAGE.

---- Part 14: USC/Information Sciences Institute copyright notice (BSD) -----

Copyright (c) 2017-2018, Information Sciences Institute

All rights reserved.

Redistribution and use in source and binary forms, with or without modification, are permitted provided that the following conditions are met:

* Redistributions of source code must retain the above copyright notice, this list of conditions and the following disclaimer.

* Redistributions in binary form must reproduce the above copyright notice, this list of conditions and the following disclaimer in the documentation and/or other materials provided with the distribution.

* Neither the name of Information Sciences Institue nor the names of its contributors may be used to endorse or promote products derived from this software without specific prior written permission.

THIS SOFTWARE IS PROVIDED BY THE COPYRIGHT HOLDERS AND CONTRIBUTORS "AS IS" AND ANY EXPRESS OR IMPLIED WARRANTIES, INCLUDING, BUT NOT LIMITED TO, THE IMPLIED WARRANTIES OF MERCHANTABILITY AND FITNESS FOR A PARTICULAR PURPOSE ARE DISCLAIMED. IN NO EVENT SHALL THE COPYRIGHT HOLDERS OR CONTRIBUTORS BE LIABLE FOR ANY DIRECT, INDIRECT, INCIDENTAL, SPECIAL, EXEMPLARY, OR CONSEQUENTIAL DAMAGES (INCLUDING, BUT NOT LIMITED TO,

PROCUREMENT OF SUBSTITUTE GOODS OR SERVICES; LOSS OF USE, DATA, OR PROFITS; OR BUSINESS INTERRUPTION) HOWEVER CAUSED AND ON ANY THEORY OF LIABILITY, WHETHER IN CONTRACT, STRICT LIABILITY, OR TORT (INCLUDING NEGLIGENCE OR OTHERWISE) ARISING IN ANY WAY OUT OF THE USE OF THIS SOFTWARE, EVEN IF ADVISED OF THE POSSIBILITY OF SUCH DAMAGE.

MIT License

Copyright (c) 1998, 1999, 2000 Thai Open Source Software Center Ltd

Permission is hereby granted, free of charge, to any person obtaining a copy of this software and associated documentation files (the "Software"), to deal in the Software without restriction, including without limitation the rights to use, copy, modify, merge, publish, distribute, sublicense, and/or sell copies of the Software, and to permit persons to whom the Software is furnished to do so, subject to the following conditions:

The above copyright notice and this permission notice shall be included in all copies or substantial portions of the Software.

THE SOFTWARE IS PROVIDED "AS IS", WITHOUT WARRANTY OF ANY KIND, EXPRESS OR IMPLIED, INCLUDING BUT NOT LIMITED TO THE WARRANTIES OF MERCHANTABILITY, FITNESS FOR A PARTICULAR PURPOSE AND NONINFRINGEMENT. IN NO EVENT SHALL THE AUTHORS OR COPYRIGHT HOLDERS BE LIABLE FOR ANY CLAIM, DAMAGES OR OTHER LIABILITY, WHETHER IN AN ACTION OF CONTRACT, TORT OR OTHERWISE, ARISING FROM, OUT OF OR IN CONNECTION WITH THE SOFTWARE OR THE USE OR OTHER DEALINGS IN THE SOFTWARE.

Copyright 2000 Computing Research Labs, New Mexico State University

Copyright 2001-2015 Francesco Zappa Nardelli

Permission is hereby granted, free of charge, to any person obtaining a copy of this software and associated documentation files (the "Software"), to deal in the Software without restriction, including without limitation the rights to use, copy, modify, merge, publish, distribute, sublicense, and/or sell copies of the Software, and to permit persons to whom the Software is furnished to do so, subject to the following conditions:

The above copyright notice and this permission notice shall be included in all copies or substantial portions of the Software.

THE SOFTWARE IS PROVIDED "AS IS", WITHOUT WARRANTY OF ANY KIND, EXPRESS OR IMPLIED, INCLUDING BUT NOT LIMITED TO THE WARRANTIES OF MERCHANTABILITY, FITNESS FOR A PARTICULAR PURPOSE AND NONINFRINGEMENT. IN NO EVENT SHALL THE COMPUTING RESEARCH LAB OR NEW MEXICO STATE UNIVERSITY BE LIABLE FOR ANY CLAIM, DAMAGES OR OTHER LIABILITY, WHETHER IN AN ACTION OF CONTRACT, TORT OR OTHERWISE, ARISING FROM, OUT OF OR IN CONNECTION WITH THE SOFTWARE OR THE USE OR OTHER DEALINGS IN THE SOFTWARE.

Written by Joel Sherrill <joel@OARcorp.com>.

COPYRIGHT (c) 1989-2000.

On-Line Applications Research Corporation (OAR).

Permission to use, copy, modify, and distribute this software for any purpose without fee is hereby granted, provided that this entire notice is included in all copies of any software which is or includes a copy or modification of this software.

THIS SOFTWARE IS BEING PROVIDED "AS IS", WITHOUT ANY EXPRESS OR IMPLIED WARRANTY. IN PARTICULAR, THE AUTHOR MAKES NO REPRESENTATION OR WARRANTY OF ANY KIND CONCERNING THE MERCHANTABILITY OF THIS SOFTWARE OR ITS FITNESS FOR ANY PARTICULAR PURPOSE.

(1) Red Hat Incorporated

Copyright (c) 1994-2009 Red Hat, Inc. All rights reserved.

This copyrighted material is made available to anyone wishing to use, modify, copy, or redistribute it subject to the terms and conditions of the BSD License. This program is distributed in the hope that it will be useful, but WITHOUT ANY WARRANTY expressed or implied, including the implied warranties of MERCHANTABILITY or FITNESS FOR A PARTICULAR PURPOSE. A copy of this license is available at http://www.opensource.org/licenses. Any Red Hat trademarks that are incorporated in the source code or documentation are not subject to the BSD License and may only be used or replicated with the express permission of Red Hat, Inc.

(2) University of California, Berkeley

Copyright (c) 1981-2000 The Regents of the University of California.

All rights reserved.

Redistribution and use in source and binary forms, with or without modification, are permitted provided that the following conditions are met:

* Redistributions of source code must retain the above copyright notice, this list of conditions and the following disclaimer.
* Redistributions in binary form must reproduce the above copyright notice, this list of conditions and the following disclaimer in the documentation and/or other materials provided with the distribution.
* Neither the name of the University nor the names of its contributors may be used to endorse or promote products derived from this software without specific prior written permission.

THIS SOFTWARE IS PROVIDED BY THE COPYRIGHT HOLDERS AND CONTRIBUTORS "AS IS" AND ANY EXPRESS OR IMPLIED WARRANTIES, INCLUDING, BUT NOT LIMITED TO, THE IMPLIED WARRANTIES OF MERCHANTABILITY AND FITNESS FOR A PARTICULAR PURPOSE ARE DISCLAIMED. IN NO EVENT SHALL THE COPYRIGHT OWNER OR CONTRIBUTORS BE LIABLE FOR ANY DIRECT, INDIRECT, INCIDENTAL, SPECIAL, EXEMPLARY, OR CONSEQUENTIAL DAMAGES (INCLUDING, BUT NOT LIMITED TO, PROCUREMENT OF SUBSTITUTE GOODS OR SERVICES; LOSS OF USE, DATA, OR PROFITS; OR BUSINESS INTERRUPTION) HOWEVER CAUSED AND ON ANY THEORY OF LIABILITY, WHETHER IN CONTRACT, STRICT LIABILITY, OR TORT (INCLUDING NEGLIGENCE OR OTHERWISE) ARISING IN ANY WAY OUT OF THE USE OF THIS SOFTWARE, EVEN IF ADVISED OF THE POSSIBILITY OF SUCH DAMAGE.

The FreeType Project LICENSE

2006-Jan-27

Copyright 1996-2002, 2006 by

David Turner, Robert Wilhelm, and Werner Lemberg

Introduction

==========

The FreeType Project is distributed in several archive packages; some of them may contain, in addition to the FreeType font engine, various tools and contributions which rely on, or relate to, the FreeType Project.

This license applies to all files found in such packages, and which do not fall under their own explicit license. The license affects thus the FreeType font engine, the test programs, documentation and makefiles, at the very least.

This license was inspired by the BSD, Artistic, and IJG (Independent JPEG Group) licenses, which all encourage inclusion and use of free software in commercial and freeware products alike. As a consequence, its main points are that:

o We don't promise that this software works. However, we will be interested in any kind of bug reports. (`as is' distribution)

o You can use this software for whatever you want, in parts or full form, without having to pay us. (`royalty-free' usage)

o You may not pretend that you wrote this software. If you use it, or only parts of it, in a program, you must acknowledge somewhere in your documentation that you have used the FreeType code. (`credits')

We specifically permit and encourage the inclusion of this software, with or without modifications, in commercial products.

We disclaim all warranties covering The FreeType Project and assume no liability related to The FreeType Project.

Finally, many people asked us for a preferred form for a credit/disclaimer to use in compliance with this license. We thus encourage you to use the following text:

"""

Portions of this software are copyright © <year> The FreeType

Project (www.freetype.org). All rights reserved.

"""

Please replace <year> with the value from the FreeType version you actually use.

Legal Terms

==========

0. Definitions

Throughout this license, the terms `package', `FreeType Project', and `FreeType archive' refer to the set of files originally distributed by the authors (David Turner, Robert Wilhelm, and Werner Lemberg) as the `FreeType Project', be they named as alpha, beta or final release.

`You' refers to the licensee, or person using the project, where `using' is a generic term including compiling the project's source code as well as linking it to form a `program' or `executable'.

This program is referred to as `a program using the FreeType engine'.

This license applies to all files distributed in the original FreeType Project, including all source code, binaries and documentation, unless otherwise stated in the file in its original, unmodified form as distributed in the original archive.

If you are unsure whether or not a particular file is covered by this license, you must contact us to verify this.

The FreeType Project is copyright (C) 1996-2000 by David Turner, Robert Wilhelm, and Werner Lemberg. All rights reserved except as specified below.

1. No Warranty

THE FREETYPE PROJECT IS PROVIDED `AS IS' WITHOUT WARRANTY OF ANY KIND, EITHER EXPRESS OR IMPLIED, INCLUDING, BUT NOT LIMITED TO, WARRANTIES OF MERCHANTABILITY AND FITNESS FOR A PARTICULAR PURPOSE. IN NO EVENT WILL ANY OF THE AUTHORS OR COPYRIGHT HOLDERS BE LIABLE FOR ANY DAMAGES CAUSED BY THE USE OR THE INABILITY TO USE, OF THE FREETYPE PROJECT.

2. Redistribution

This license grants a worldwide, royalty-free, perpetual and irrevocable right and license to use, execute, perform, compile, display, copy, create derivative works of, distribute and sublicense the FreeType Project (in both source and object code forms) and derivative works thereof for any purpose; and to authorize others to exercise some or all of the rights granted herein, subject to the following conditions:

o Redistribution of source code must retain this license file (`FTL.TXT') unaltered; any additions, deletions or changes to the original files must be clearly indicated in accompanying documentation. The copyright notices of the unaltered, original files must be preserved in all copies of source files.

o Redistribution in binary form must provide a disclaimer that states that the software is based in part of the work of the FreeType Team, in the distribution documentation. We also encourage you to put an URL to the FreeType web page in your documentation, though this isn't mandatory.

These conditions apply to any software derived from or based on the FreeType Project, not just the unmodified files. If you use our work, you must acknowledge us. However, no fee need be paid to us.

3. Advertising

Neither the FreeType authors and contributors nor you shall use the name of the other for commercial, advertising, or promotional purposes without specific prior written permission.

We suggest, but do not require, that you use one or more of the following phrases to refer to this software in your documentation or advertising materials: `FreeType Project', `FreeType Engine', `FreeType library', or `FreeType Distribution'.

As you have not signed this license, you are not required to accept it. However, as the FreeType Project is copyrighted material, only this license, or another one contracted with the authors, grants you the right to use, distribute, and modify it.

Therefore, by using, distributing, or modifying the FreeType Project, you indicate that you understand and accept all the terms of this license.

4. Contacts

There are two mailing lists related to FreeType:

o freetype@nongnu.org

Discusses general use and applications of FreeType, as well as future and wanted additions to the library and distribution.

If you are looking for support, start in this list if you haven't found anything to help you in the documentation.

o freetype-devel@nongnu.org

Discusses bugs, as well as engine internals, design issues, specific licenses, porting, etc.

Our home page can be found at

http://www.freetype.org

--- end of FTL.TXT ---

The TWAIN Toolkit is distributed as is. The developer and distributors of the TWAIN Toolkit expressly disclaim all implied, express or statutory warranties including, without limitation, the implied warranties of merchantability, noninfringement of third party rights and fitness for a particular purpose. Neither the developers nor the distributors will be liable for damages, whether direct, indirect, special, incidental, or consequential, as a result of the reproduction, modification, distribution or other use of the TWAIN Toolkit.

JSON for Modern C++

Copyright (c) 2013-2017 Niels Lohmann

Permission is hereby granted, free of charge, to any person obtaining a copy of this software and associated documentation files (the "Software"), to deal in the Software without restriction, including without limitation the rights to use, copy, modify, merge, publish, distribute, sublicense, and/or sell copies of the Software, and to permit persons to whom the Software is furnished to do so, subject to the following conditions:

The above copyright notice and this permission notice shall be included in all copies or substantial portions of the Software.

THE SOFTWARE IS PROVIDED "AS IS", WITHOUT WARRANTY OF ANY KIND, EXPRESS OR IMPLIED, INCLUDING BUT NOT LIMITED TO THE WARRANTIES OF MERCHANTABILITY, FITNESS FOR A PARTICULAR PURPOSE AND NONINFRINGEMENT. IN NO EVENT SHALL THE AUTHORS OR COPYRIGHT HOLDERS BE LIABLE FOR ANY CLAIM, DAMAGES OR OTHER LIABILITY, WHETHER IN AN ACTION OF CONTRACT, TORT OR OTHERWISE, ARISING FROM, OUT OF OR IN CONNECTION WITH THE SOFTWARE OR THE USE OR OTHER DEALINGS IN THE SOFTWARE.

Copyright (c) 2011 - 2015 ARM LIMITED

All rights reserved.

Redistribution and use in source and binary forms, with or without modification, are permitted provided that the following conditions are met:

- Redistributions of source code must retain the above copyright notice, this list of conditions and the following disclaimer.

- Redistributions in binary form must reproduce the above copyright notice, this list of conditions and the following disclaimer in the documentation and/or other materials provided with the distribution.
- Neither the name of ARM nor the names of its contributors may be used to endorse or promote products derived from this software without specific prior written permission.

THIS SOFTWARE IS PROVIDED BY THE COPYRIGHT HOLDERS AND CONTRIBUTORS "AS IS" AND ANY EXPRESS OR IMPLIED WARRANTIES, INCLUDING, BUT NOT LIMITED TO, THE IMPLIED WARRANTIES OF MERCHANTABILITY AND FITNESS FOR A PARTICULAR PURPOSE ARE DISCLAIMED. IN NO EVENT SHALL COPYRIGHT HOLDERS AND CONTRIBUTORS BE LIABLE FOR ANY DIRECT, INDIRECT, INCIDENTAL, SPECIAL, EXEMPLARY, OR CONSEQUENTIAL DAMAGES (INCLUDING, BUT NOT LIMITED TO, PROCUREMENT OF SUBSTITUTE GOODS OR SERVICES; LOSS OF USE, DATA, OR PROFITS; OR BUSINESS INTERRUPTION) HOWEVER CAUSED AND ON ANY THEORY OF LIABILITY, WHETHER IN CONTRACT, STRICT LIABILITY, OR TORT (INCLUDING NEGLIGENCE OR OTHERWISE) ARISING IN ANY WAY OUT OF THE USE OF THIS SOFTWARE, EVEN IF ADVISED OF THE POSSIBILITY OF SUCH DAMAGE.

Copyright (c) 2014, Kenneth MacKay

All rights reserved.

Redistribution and use in source and binary forms, with or without modification, are permitted provided that the following conditions are met:

* Redistributions of source code must retain the above copyright notice, this list of conditions and the following disclaimer.
* Redistributions in binary form must reproduce the above copyright notice, this list of conditions and the following disclaimer in the documentation and/or other materials provided with the distribution.

THIS SOFTWARE IS PROVIDED BY THE COPYRIGHT HOLDERS AND CONTRIBUTORS "AS IS" AND ANY EXPRESS OR IMPLIED WARRANTIES, INCLUDING, BUT NOT LIMITED TO, THE IMPLIED WARRANTIES OF MERCHANTABILITY AND FITNESS FOR A PARTICULAR PURPOSE ARE DISCLAIMED. IN NO EVENT SHALL THE COPYRIGHT HOLDER OR CONTRIBUTORS BE LIABLE FOR ANY DIRECT, INDIRECT, INCIDENTAL, SPECIAL, EXEMPLARY, OR CONSEQUENTIAL DAMAGES (INCLUDING, BUT NOT LIMITED TO, PROCUREMENT OF SUBSTITUTE GOODS OR SERVICES; LOSS OF USE, DATA, OR PROFITS; OR BUSINESS INTERRUPTION) HOWEVER CAUSED AND ON ANY THEORY OF LIABILITY, WHETHER IN CONTRACT, STRICT LIABILITY, OR TORT (INCLUDING NEGLIGENCE OR OTHERWISE) ARISING IN ANY WAY OUT OF THE USE OF THIS SOFTWARE, EVEN IF ADVISED OF THE POSSIBILITY OF SUCH DAMAGE.

Copyright (c) 2006, CRYPTOGAMS by <appro@openssl.org> All rights reserved.

Redistribution and use in source and binary forms, with or without modification, are permitted provided that the following conditions are met:

* Redistributions of source code must retain copyright notices, this list of conditions and the following disclaimer.
* Redistributions in binary form must reproduce the above copyright notice, this list of conditions and the following disclaimer in the documentation and/or other materials provided with the distribution.
* Neither the name of the CRYPTOGAMS nor the names of its copyright holder and contributors may be used to endorse or promote products derived from this software without specific prior written permission.

ALTERNATIVELY, provided that this notice is retained in full, this product may be distributed under the terms of the GNU General Public License (GPL), in which case the provisions of the GPL apply INSTEAD OF those given above.

THIS SOFTWARE IS PROVIDED BY THE COPYRIGHT HOLDER AND CONTRIBUTORS "AS IS" AND ANY EXPRESS OR IMPLIED WARRANTIES, INCLUDING, BUT NOT LIMITED TO, THE IMPLIED WARRANTIES OF MERCHANTABILITY AND FITNESS FOR A PARTICULAR PURPOSE ARE DISCLAIMED. IN NO EVENT SHALL THE COPYRIGHT OWNER OR CONTRIBUTORS BE LIABLE FOR ANY DIRECT, INDIRECT, INCIDENTAL, SPECIAL, EXEMPLARY, OR CONSEQUENTIAL DAMAGES (INCLUDING, BUT NOT LIMITED TO, PROCUREMENT OF SUBSTITUTE GOODS OR SERVICES; LOSS OF USE, DATA, OR PROFITS; OR BUSINESS INTERRUPTION) HOWEVER CAUSED AND ON ANY THEORY OF LIABILITY, WHETHER IN CONTRACT, STRICT LIABILITY, OR TORT (INCLUDING NEGLIGENCE OR OTHERWISE) ARISING IN ANY WAY OUT OF THE USE OF THIS SOFTWARE, EVEN IF ADVISED OF THE POSSIBILITY OF SUCH DAMAGE.

ISC License

Copyright (c) 2013-2017

Frank Denis <j at pureftpd dot org>

Permission to use, copy, modify, and/or distribute this software for any purpose with or without fee is hereby granted, provided that the above copyright notice and this permission notice appear in all copies.

THE SOFTWARE IS PROVIDED "AS IS" AND THE AUTHOR DISCLAIMS ALL WARRANTIES WITH REGARD TO THIS SOFTWARE INCLUDING ALL IMPLIED WARRANTIES OF MERCHANTABILITY AND FITNESS. IN NO EVENT SHALL THE AUTHOR BE LIABLE FOR ANY SPECIAL, DIRECT, INDIRECT, OR CONSEQUENTIAL DAMAGES OR ANY DAMAGES WHATSOEVER RESULTING FROM LOSS OF USE, DATA OR PROFITS, WHETHER IN AN ACTION OF CONTRACT, NEGLIGENCE OR OTHER TORTIOUS ACTION, ARISING OUT OF OR IN CONNECTION WITH THE USE OR PERFORMANCE OF THIS SOFTWARE.

Copyright (c) 2008 The NetBSD Foundation, Inc.

All rights reserved.

This code is derived from software contributed to The NetBSD Foundation
by Lennart Augustsson (lennart@augustsson.net) at
Carlstedt Research & Technology.

Redistribution and use in source and binary forms, with or without
modification, are permitted provided that the following conditions
are met:

1. Redistributions of source code must retain the above copyright notice, this list of conditions and the following disclaimer.
2. Redistributions in binary form must reproduce the above copyright notice, this list of conditions and the following disclaimer in the documentation and/or other materials provided with the distribution.

THIS SOFTWARE IS PROVIDED BY THE NETBSD FOUNDATION, INC. AND CONTRIBUTORS "AS IS" AND ANY EXPRESS OR IMPLIED WARRANTIES, INCLUDING, BUT NOT LIMITED TO, THE IMPLIED WARRANTIES OF MERCHANTABILITY AND FITNESS FOR A PARTICULAR

PURPOSE ARE DISCLAIMED. IN NO EVENT SHALL THE FOUNDATION OR CONTRIBUTORS BE LIABLE FOR ANY DIRECT, INDIRECT, INCIDENTAL, SPECIAL, EXEMPLARY, OR CONSEQUENTIAL DAMAGES (INCLUDING, BUT NOT LIMITED TO, PROCUREMENT OF SUBSTITUTE GOODS OR SERVICES; LOSS OF USE, DATA, OR PROFITS; OR BUSINESS INTERRUPTION) HOWEVER CAUSED AND ON ANY THEORY OF LIABILITY, WHETHER IN CONTRACT, STRICT LIABILITY, OR TORT (INCLUDING NEGLIGENCE OR OTHERWISE) ARISING IN ANY WAY OUT OF THE USE OF THIS SOFTWARE, EVEN IF ADVISED OF THE POSSIBILITY OF SUCH DAMAGE.

Copyright (c) 2000 Intel Corporation

All rights reserved.

Redistribution and use in source and binary forms, with or without modification, are permitted provided that the following conditions are met:

* Redistributions of source code must retain the above copyright notice, this list of conditions and the following disclaimer.
* Redistributions in binary form must reproduce the above copyright notice, this list of conditions and the following disclaimer in the documentation and/or other materials provided with the distribution.
* Neither name of Intel Corporation nor the names of its contributors may be used to endorse or promote products derived from this software without specific prior written permission.

THIS SOFTWARE IS PROVIDED BY THE COPYRIGHT HOLDERS AND CONTRIBUTORS "AS IS" AND ANY EXPRESS OR IMPLIED WARRANTIES, INCLUDING, BUT NOT LIMITED TO, THE IMPLIED WARRANTIES OF MERCHANTABILITY AND FITNESS FOR A PARTICULAR PURPOSE ARE DISCLAIMED. IN NO EVENT SHALL INTEL OR CONTRIBUTORS BE LIABLE FOR ANY DIRECT, INDIRECT, INCIDENTAL, SPECIAL, EXEMPLARY, OR CONSEQUENTIAL DAMAGES (INCLUDING, BUT NOT LIMITED TO, PROCUREMENT OF SUBSTITUTE GOODS OR SERVICES; LOSS OF USE, DATA, OR PROFITS; OR BUSINESS INTERRUPTION) HOWEVER CAUSED AND ON ANY THEORY OF LIABILITY, WHETHER IN CONTRACT, STRICT LIABILITY, OR TORT (INCLUDING NEGLIGENCE OR OTHERWISE) ARISING IN ANY WAY OUT OF THE USE OF THIS SOFTWARE, EVEN IF ADVISED OF THE POSSIBILITY OF SUCH DAMAGE.

Lua

Copyright © 1994–2014 Lua.org, PUC-Rio.

Permission is hereby granted, free of charge, to any person obtaining a copy of this software and associated
documentation files (the "Software"), to deal in the Software without restriction, including without limitation the
rights to use, copy, modify, merge, publish, distribute, sublicense, and/or sell copies of the Software, and to
permit persons to whom the Software is furnished to do so, subject to the following conditions:

The above copyright notice and this permission notice shall be included in all copies or substantial portions of
the Software.

THE SOFTWARE IS PROVIDED "AS IS", WITHOUT WARRANTY OF ANY KIND, EXPRESS OR IMPLIED,
INCLUDING BUT NOT LIMITED TO THE WARRANTIES OF MERCHANTABILITY, FITNESS FOR A PARTICULAR PURPOSE AND NONINFRINGEMENT. IN NO EVENT SHALL THE AUTHORS OR COPYRIGHT HOLDERS BE LIABLE FOR ANY CLAIM, DAMAGES OR OTHER LIABILITY, WHETHER IN AN
ACTION OF CONTRACT, TORT OR OTHERWISE, ARISING FROM, OUT OF OR IN CONNECTION WITH
THE SOFTWARE OR THE USE OR OTHER DEALINGS IN THE SOFTWARE.

LuaSocket

LuaSocket 2.0.2 license
Copyright © 2004-2007 Diego Nehab

Permission is hereby granted, free of charge, to any person obtaining a
copy of this software and associated documentation files (the "Software"),
to deal in the Software without restriction, including without limitation
the rights to use, copy, modify, merge, publish, distribute, sublicense,
and/or sell copies of the Software, and to permit persons to whom the
Software is furnished to do so, subject to the following conditions:

The above copyright notice and this permission notice shall be included in
all copies or substantial portions of the Software.

THE SOFTWARE IS PROVIDED "AS IS", WITHOUT WARRANTY OF ANY KIND, EXPRESS OR IMPLIED, INCLUDING BUT NOT LIMITED TO THE WARRANTIES OF MERCHANTABILITY, FITNESS FOR A PARTICULAR PURPOSE AND NONINFRINGEMENT. IN NO EVENT SHALL THE AUTHORS OR COPYRIGHT HOLDERS BE LIABLE FOR ANY CLAIM, DAMAGES OR OTHER LIABILITY, WHETHER IN AN ACTION OF CONTRACT, TORT OR OTHERWISE, ARISING FROM, OUT OF OR IN CONNECTION WITH THE SOFTWARE OR THE USE OR OTHER DEALINGS IN THE SOFTWARE.

LuneScript

Copyright (c) 2018 ifritJP

Permission is hereby granted, free of charge, to any person obtaining a copy
of this software and associated documentation files (the "Software"), to deal
in the Software without restriction, including without limitation the rights
to use, copy, modify, merge, publish, distribute, sublicense, and/or sell
copies of the Software, and to permit persons to whom the Software is
furnished to do so, subject to the following conditions:

The above copyright notice and this permission notice shall be included in all
copies or substantial portions of the Software.

THE SOFTWARE IS PROVIDED "AS IS", WITHOUT WARRANTY OF ANY KIND, EXPRESS OR IMPLIED, INCLUDING BUT NOT LIMITED TO THE WARRANTIES OF MERCHANTABILITY, FITNESS FOR A PARTICULAR PURPOSE AND NONINFRINGEMENT. IN NO EVENT SHALL THE AUTHORS OR COPYRIGHT HOLDERS BE LIABLE FOR ANY CLAIM, DAMAGES OR OTHER LIABILITY, WHETHER IN AN ACTION OF CONTRACT, TORT OR OTHERWISE, ARISING FROM, OUT OF OR IN CONNECTION WITH THE SOFTWARE OR THE USE OR OTHER DEALINGS IN THE SOFTWARE.

Copyright (c) 2002-2019, Jouni Malinen <j@w1.fi> and contributors
All Rights Reserved.

This software may be distributed, used, and modified under the terms of BSD license:

Redistribution and use in source and binary forms, with or without modification, are permitted provided that the following conditions are met:

1. Redistributions of source code must retain the above copyright notice, this list of conditions and the following disclaimer.
2. Redistributions in binary form must reproduce the above copyright notice, this list of conditions and the following disclaimer in the documentation and/or other materials provided with the distribution.
3. Neither the name(s) of the above-listed copyright holder(s) nor the names of its contributors may be used to endorse or promote products derived from this software without specific prior written permission.

THIS SOFTWARE IS PROVIDED BY THE COPYRIGHT HOLDERS AND CONTRIBUTORS "AS IS" AND ANY EXPRESS OR IMPLIED WARRANTIES, INCLUDING, BUT NOT LIMITED TO, THE IMPLIED WARRANTIES OF MERCHANTABILITY AND FITNESS FOR A PARTICULAR PURPOSE ARE DISCLAIMED. IN NO EVENT SHALL THE COPYRIGHT OWNER OR CONTRIBUTORS BE LIABLE FOR ANY DIRECT, INDIRECT, INCIDENTAL, SPECIAL, EXEMPLARY, OR CONSEQUENTIAL DAMAGES (INCLUDING, BUT NOT LIMITED TO, PROCUREMENT OF SUBSTITUTE GOODS OR SERVICES; LOSS OF USE, DATA, OR PROFITS; OR BUSINESS INTERRUPTION) HOWEVER CAUSED AND ON ANY THEORY OF LIABILITY, WHETHER IN CONTRACT, STRICT LIABILITY, OR TORT (INCLUDING NEGLIGENCE OR OTHERWISE) ARISING IN ANY WAY OUT OF THE USE OF THIS SOFTWARE, EVEN IF ADVISED OF THE POSSIBILITY OF SUCH DAMAGE.

Copyright (C) 2019, Broadcom Corporation. All Rights Reserved.

Permission to use, copy, modify, and/or distribute this software for any purpose with or without fee is hereby granted, provided that the above copyright notice and this permission notice appear in all copies.

THE SOFTWARE IS PROVIDED "AS IS" AND THE AUTHOR DISCLAIMS ALL WARRANTIES WITH REGARD TO THIS SOFTWARE INCLUDING ALL IMPLIED WARRANTIES OF MERCHANTABILITY AND FITNESS. IN NO EVENT SHALL THE AUTHOR BE LIABLE FOR ANY SPECIAL, DIRECT, INDIRECT, OR CONSEQUENTIAL DAMAGES OR ANY DAMAGES WHATSOEVER RESULTING FROM LOSS OF USE, DATA OR PROFITS, WHETHER IN AN ACTION OF CONTRACT, NEGLIGENCE OR OTHER TORTIOUS ACTION, ARISING OUT OF OR IN CONNECTION WITH THE USE OR PERFORMANCE OF THIS SOFTWARE.

The certificate files "Amazon Root CA 1", "Amazon Root CA 2", "Amazon Root CA 4" are licensed under a Creative Commons Attribution-NoDerivatives 4.0 International License.

The following applies only to products supporting Wi-Fi.

(c) 2009-2013 by Jeff Mott. All rights reserved.

Redistribution and use in source and binary forms, with or without modification, are permitted provided that the following conditions are met:

* Redistributions of source code must retain the above copyright notice, this list of conditions, and the following disclaimer.
* Redistributions in binary form must reproduce the above copyright notice, this list of conditions, and the following disclaimer in the documentation or other materials provided with the distribution.
* Neither the name CryptoJS nor the names of its contributors may be used to endorse or promote products derived from this software without specific prior written permission.

THIS SOFTWARE IS PROVIDED BY THE COPYRIGHT HOLDERS AND CONTRIBUTORS "AS IS," AND ANY EXPRESS OR IMPLIED WARRANTIES, INCLUDING, BUT NOT LIMITED TO, THE IMPLIED WARRANTIES OF MERCHANTABILITY AND FITNESS FOR A PARTICULAR PURPOSE, ARE DISCLAIMED. IN NO EVENT SHALL THE COPYRIGHT HOLDER OR CONTRIBUTORS BE LIABLE FOR ANY DIRECT, INDIRECT, INCIDENTAL, SPECIAL, EXEMPLARY, OR CONSEQUENTIAL DAMAGES (INCLUDING, BUT NOT LIMITED TO, PROCUREMENT OF SUBSTITUTE GOODS OR SERVICES; LOSS OF USE, DATA, OR PROFITS; OR BUSINESS INTERRUPTION) HOWEVER CAUSED AND ON ANY THEORY OF LIABILITY, WHETHER IN CONTRACT, STRICT LIABILITY, OR TORT (INCLUDING NEGLIGENCE OR OTHERWISE) ARISING IN ANY WAY OUT OF THE USE OF THIS SOFTWARE, EVEN IF ADVISED OF THE POSSIBILITY OF SUCH DAMAGE.

Copyright 2008, Google Inc.

All rights reserved.

Redistribution and use in source and binary forms, with or without modification, are permitted provided that the following conditions are met:

* Redistributions of source code must retain the above copyright notice, this list of conditions and the following disclaimer.
* Redistributions in binary form must reproduce the above copyright notice, this list of conditions and the following disclaimer in the documentation and/or other materials provided with the distribution.

* Neither the name of Google Inc. nor the names of its
contributors may be used to endorse or promote products derived from
this software without specific prior written permission.

THIS SOFTWARE IS PROVIDED BY THE COPYRIGHT HOLDERS AND CONTRIBUTORS
AS IS AND ANY EXPRESS OR IMPLIED WARRANTIES, INCLUDING, BUT NOT
LIMITED TO, THE IMPLIED WARRANTIES OF MERCHANTABILITY AND FITNESS FOR
A PARTICULAR PURPOSE ARE DISCLAIMED. IN NO EVENT SHALL THE COPYRIGHT
OWNER OR CONTRIBUTORS BE LIABLE FOR ANY DIRECT, INDIRECT, INCIDENTAL,
SPECIAL, EXEMPLARY, OR CONSEQUENTIAL DAMAGES (INCLUDING, BUT NOT
LIMITED TO, PROCUREMENT OF SUBSTITUTE GOODS OR SERVICES; LOSS OF USE,
DATA, OR PROFITS; OR BUSINESS INTERRUPTION) HOWEVER CAUSED AND ON ANY
THEORY OF LIABILITY, WHETHER IN CONTRACT, STRICT LIABILITY, OR TORT
(INCLUDING NEGLIGENCE OR OTHERWISE) ARISING IN ANY WAY OUT OF THE USE
OF THIS SOFTWARE, EVEN IF ADVISED OF THE POSSIBILITY OF SUCH DAMAGE.

Copyright (c) 1998-2010, Brian Gladman, Worcester, UK. All rights reserved.

The redistribution and use of this software (with or without changes)
is allowed without the payment of fees or royalties provided that:
source code distributions include the above copyright notice, this
list of conditions and the following disclaimer;
binary distributions include the above copyright notice, this list
of conditions and the following disclaimer in their documentation.

This software is provided 'as is' with no explicit or implied warranties
in respect of its operation, including, but not limited to, correctness
and fitness for purpose.

Disclaimer: IMPORTANT: This Apple software is supplied to you, by Apple Inc. ("Apple"), in your capacity as a current, and in good standing, Licensee in the MFi Licensing Program. Use of this Apple software is governed by and subject to the terms and conditions of your MFi License, including, but not limited to, the restrictions specified in the provision entitled "Public Software", and is further subject to your agreement to the following additional terms, and your agreement that the use, installation, modification or redistribution of this Apple software constitutes acceptance of these additional terms. If you do not agree with these additional terms, please do not use, install, modify or redistribute this Apple software.

Subject to all of these terms and in consideration of your agreement to abide by them, Apple grants you, for as long as you are a current and in good-standing MFi Licensee, a personal, non-exclusive license, under Apple's copyrights in this original Apple software (the "Apple Software"), to use, reproduce, and modify the Apple Software in source form, and to use, reproduce, modify, and redistribute the Apple Software, with or without modifications, in binary form. While you may not redistribute the Apple Software in source form, should you redistribute the Apple Software in binary form, you must retain this notice and the following text and disclaimers in all such redistributions of the Apple Software. Neither the name, trademarks, service marks, or logos of Apple Inc. may be used to endorse or promote products derived from the Apple Software without specific prior written permission from Apple. Except as expressly stated in this notice, no other rights or licenses, express or implied, are granted by Apple herein, including but not limited to any patent rights that

may be infringed by your derivative works or by other works in which the Apple Software may be incorporated.

Unless you explicitly state otherwise, if you provide any ideas, suggestions, recommendations, bug fixes or enhancements to Apple in connection with this software ("Feedback"), you hereby grant to Apple a non-exclusive, fully paid-up, perpetual, irrevocable, worldwide license to make, use, reproduce, incorporate, modify, display, perform, sell, make or have made derivative works of, distribute (directly or indirectly) and sublicense, such Feedback in connection with Apple products and services. Providing this Feedback is voluntary, but if you do provide Feedback to Apple, you acknowledge and agree that Apple may exercise the license granted above without the payment of royalties or further consideration to Participant.

The Apple Software is provided by Apple on an "AS IS" basis. APPLE MAKES NO WARRANTIES, EXPRESS OR
IMPLIED, INCLUDING WITHOUT LIMITATION THE IMPLIED WARRANTIES OF NON-INFRINGEMENT, MERCHANTABILITY
AND FITNESS FOR A PARTICULAR PURPOSE, REGARDING THE APPLE SOFTWARE OR ITS USE AND OPERATION ALONE OR
IN COMBINATION WITH YOUR PRODUCTS.

IN NO EVENT SHALL APPLE BE LIABLE FOR ANY SPECIAL, INDIRECT, INCIDENTAL OR CONSEQUENTIAL DAMAGES
(INCLUDING, BUT NOT LIMITED TO, PROCUREMENT OF SUBSTITUTE GOODS OR SERVICES; LOSS OF USE, DATA, OR
PROFITS; OR BUSINESS INTERRUPTION) ARISING IN ANY WAY OUT OF THE USE, REPRODUCTION, MODIFICATION
AND/OR DISTRIBUTION OF THE APPLE SOFTWARE, HOWEVER CAUSED AND WHETHER UNDER THEORY OF CONTRACT, TORT
(INCLUDING NEGLIGENCE), STRICT LIABILITY OR OTHERWISE, EVEN IF APPLE HAS BEEN ADVISED OF THE
POSSIBILITY OF SUCH DAMAGE.

Copyright (C) 2009 Apple Inc. All Rights Reserved.

Copyright (c) 2012-2013 Apple Inc. All rights reserved.

Copyright (C) 2013 Apple Inc. All Rights Reserved.

The following applies only to products supporting PIXUS Cloud Link, PIXMA Cloud Link, or MAXIFY Cloud Link.

THE BASIC LIBRARY FUNCTIONS

Written by: Philip Hazel
Email local part: ph10
Email domain: cam.ac.uk
University of Cambridge Computing Service, Cambridge, England.
Copyright (c) 1997-2012 University of Cambridge
All rights reserved.

PCRE JUST-IN-TIME COMPILATION SUPPORT

Written by: Zoltan Herczeg
Email local part: hzmester
Emain domain: freemail.hu
Copyright(c) 2010-2012 Zoltan Herczeg
All rights reserved.

STACK-LESS JUST-IN-TIME COMPILER

Written by: Zoltan Herczeg
Email local part: hzmester
Emain domain: freemail.hu
Copyright(c) 2009-2012 Zoltan Herczeg
All rights reserved.

THE C++ WRAPPER FUNCTIONS

Contributed by: Google Inc.
Copyright (c) 2007-2012, Google Inc.
All rights reserved.

THE "BSD" LICENCE

----------Redistribution and use in source and binary forms, with or without modification, are permitted provided that the following conditions are met:

* Redistributions of source code must retain the above copyright notice,
this list of conditions and the following disclaimer.

* Redistributions in binary form must reproduce the above copyright
notice, this list of conditions and the following disclaimer in the
documentation and/or other materials provided with the distribution.

* Neither the name of the University of Cambridge nor the name of Google
Inc. nor the names of their contributors may be used to endorse or
promote products derived from this software without specific prior
written permission.

THIS SOFTWARE IS PROVIDED BY THE COPYRIGHT HOLDERS AND CONTRIBUTORS "AS IS"
AND ANY EXPRESS OR IMPLIED WARRANTIES, INCLUDING, BUT NOT LIMITED TO, THE
IMPLIED WARRANTIES OF MERCHANTABILITY AND FITNESS FOR A PARTICULAR PURPOSE
ARE DISCLAIMED. IN NO EVENT SHALL THE COPYRIGHT OWNER OR CONTRIBUTORS BE

LIABLE FOR ANY DIRECT, INDIRECT, INCIDENTAL, SPECIAL, EXEMPLARY, OR CONSEQUENTIAL DAMAGES (INCLUDING, BUT NOT LIMITED TO, PROCUREMENT OF SUBSTITUTE GOODS OR SERVICES; LOSS OF USE, DATA, OR PROFITS; OR BUSINESS INTERRUPTION) HOWEVER CAUSED AND ON ANY THEORY OF LIABILITY, WHETHER IN CONTRACT, STRICT LIABILITY, OR TORT (INCLUDING NEGLIGENCE OR OTHERWISE) ARISING IN ANY WAY OUT OF THE USE OF THIS SOFTWARE, EVEN IF ADVISED OF THE POSSIBILITY OF SUCH DAMAGE.

This software is based in part on the work of the Independent JPEG Group.

Main Components and Their Use

- Main Components
- Power Supply
- Loading Paper
- Loading Originals

Main Components

- Front View
- Rear View
- Inside View
- Operation Panel

Front View

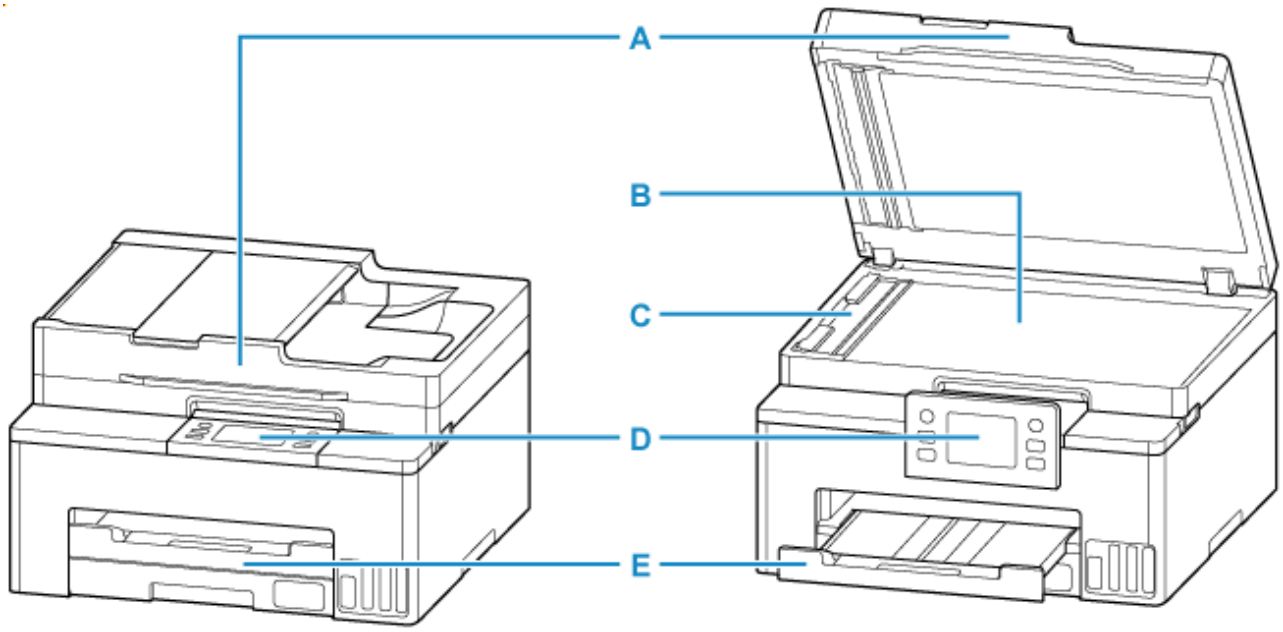

A: Document Cover

Open to load an original on the platen.

B: Platen

Load an original here.

C: ADF Scan Helper

Remove only when cleaning the ADF.

D: Operation Panel

Use to change the settings of the printer or to operate it. The panel is pushed open by the paper output tray before printing starts.

➡ Operation Panel

E: Paper Output Tray

Printed paper is ejected. Pull out it before printing.

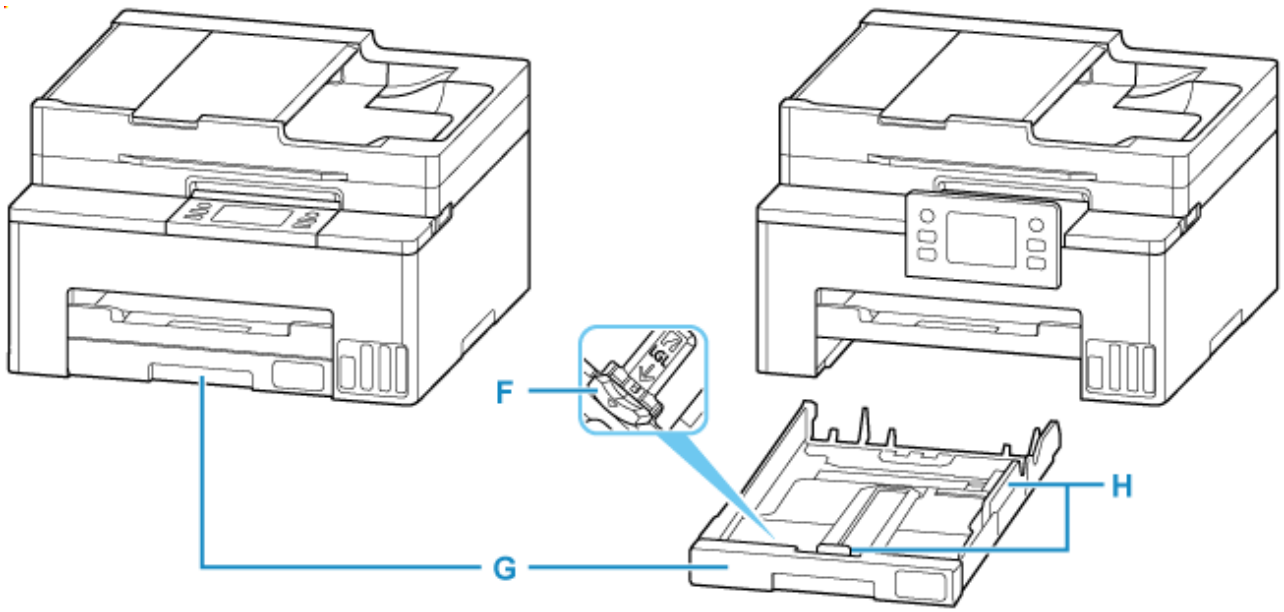

F: Resizing Tab

Use to load legal-size paper into the cassette.

G: Cassette

Loads the paper and feeds it into the printer.

➡ Loading Plain Paper

H: Paper Guides

Align with right/left/front sides of the paper stack.

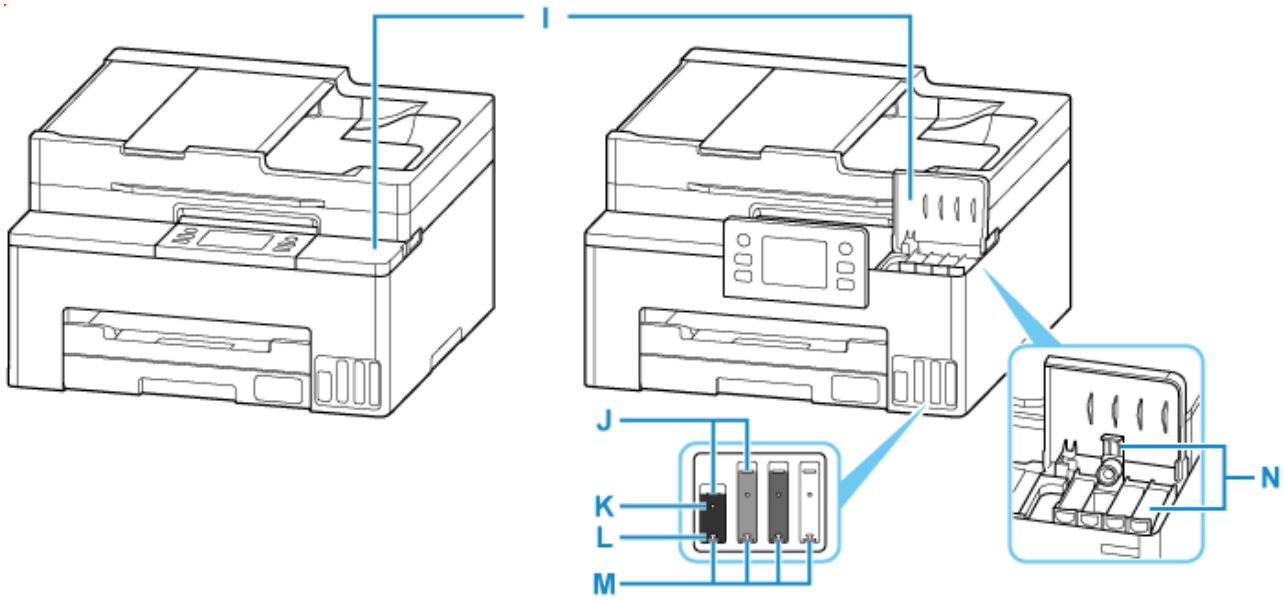

I: Ink Tank Covers

Open to refill ink tanks.

J: Upper Limit Line

Indicates the maximum capacity of the ink.

K: Single Dot

Indicates the amount of ink required when replacing ink in print head.

L: Lower Limit Line

Indicates the lower limit of the sufficient amount of ink to print. Refill the ink tank before the amount of ink is below this line.

M: Ink Tanks

The black ink tank is on the left, and the color ink tanks (cyan, magenta, and yellow) are on the right.

If any ink levels are low, refill the low tanks.

➡ Refilling Ink Tanks

N: Tank Caps

Open to refill ink tanks.

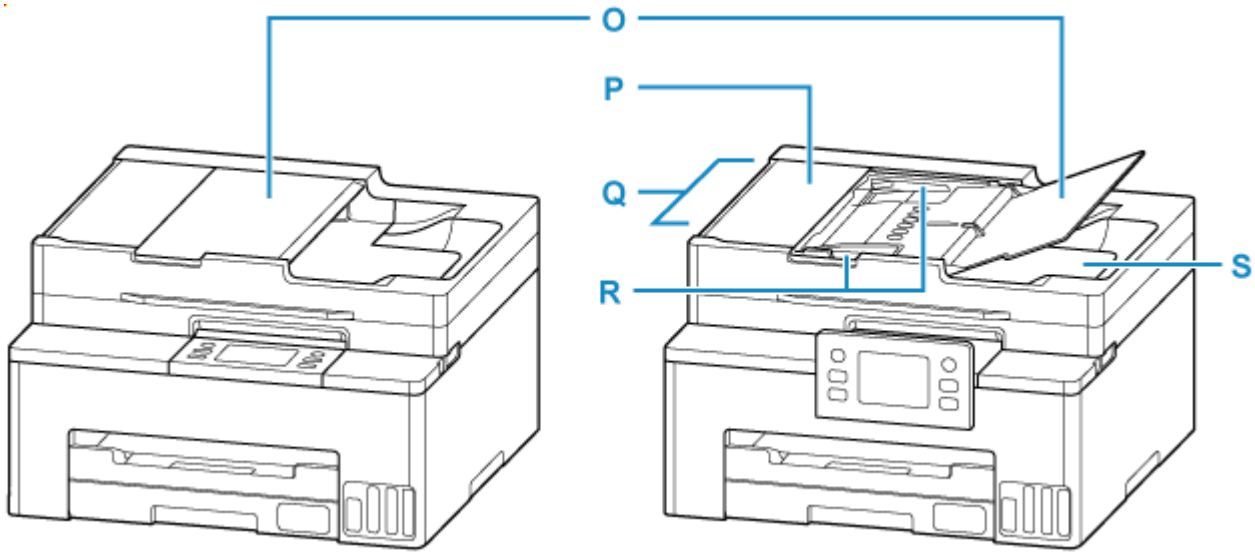

O: Document Tray

Open to load a document in the ADF. You can load two or more sheets of document of the same size and thickness. Load the document with the side you want to scan facing up.

P: Document Feeder Cover

Open when clearing jammed documents.

Q: ADF (Auto Document Feeder)

Load a document here. The documents loaded in the document tray are scanned automatically one sheet at a time.

➡ Loading Documents in the ADF (Auto Document Feeder)

R: Document Guide

Adjust this guide to match the width of document in the ADF.

S: Document Output Slot

Documents scanned from the ADF are delivered here.

Rear View

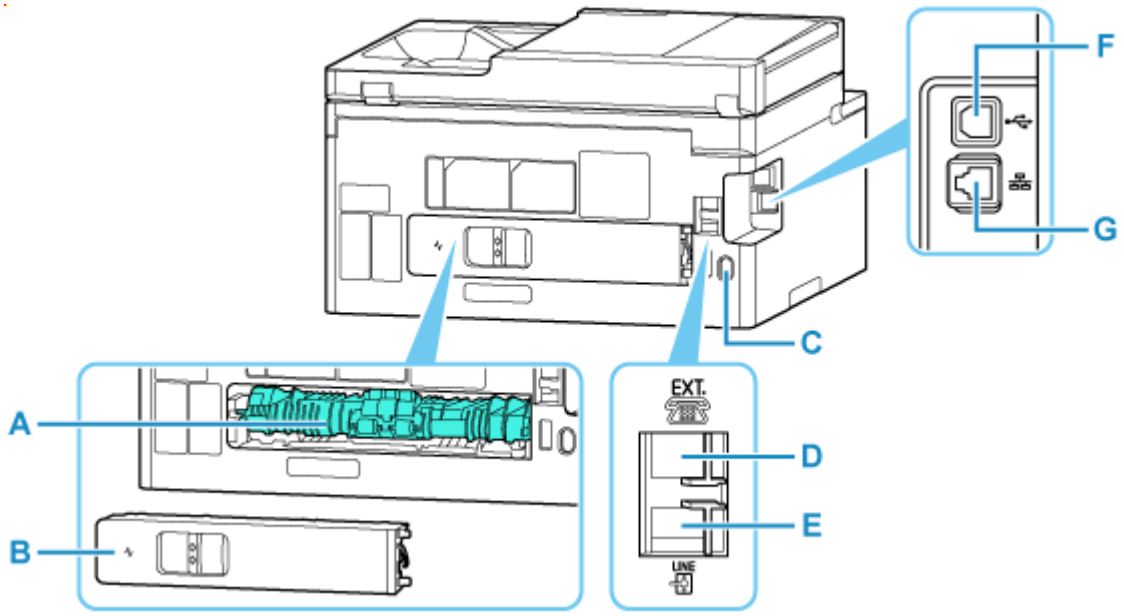

A: Transport Unit

Open when removing jammed paper. When removing the unit, do so after placing a finger on the depression in the center right.

B: Rear Cover

Detach when removing jammed paper.

C: Power Cord Connector

Plug in the supplied power cord.

D: External Device Jack

Connect an external device such as telephone or answering device.

E: Telephone Line Jack

Connect the telephone line.

F: USB Port

Plug in the USB cable to connect the printer with a computer.

G: Wired LAN Connector

Plug in the LAN cable to connect the printer to a LAN.

Important

- Do not touch the metal casing.
- Do not plug in or unplug the USB cable while the printer is printing or scanning with the computer. This can cause trouble.

Inside View

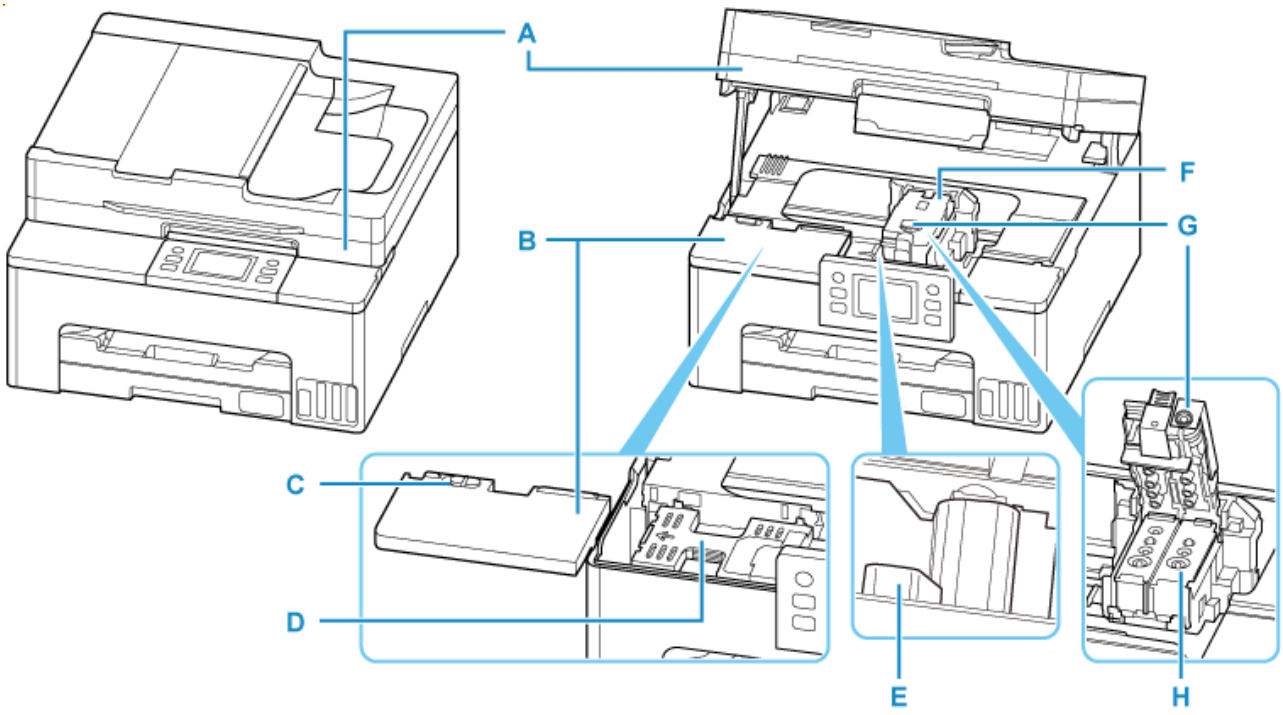

A: Scanning Unit / Cover

Scans originals. Open to refill ink tanks and to remove jammed paper.

B: Maintenance Cover

Remove when replacing the maintenance cartridge.

C: Maintenance Cover Lock

Use this when replacing the maintenance cartridge.

D: Maintenance Cartridge

Absorbs ink used for cleaning.

➡ Replacing the Maintenance Cartridge

E: Ink Valve Lever

Operate when transporting a printer.

➡ Transporting Your Printer

F: Print Head Holder

The print head is pre-installed.

G: Print Head Locking Cover

Lock the print head into place.

H: Print Head

Operation Panel

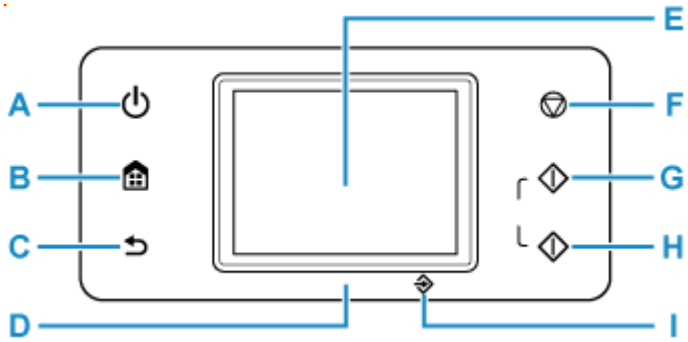

A: ON button

Turns the power on or off. Before turning on the power, make sure that the document cover is closed.

➡ Turning the Printer On and Off

B: HOME button

Used to display the HOME screen.

➡ Using Touch Screen

C: Back button

Returns to the previous screen.

D: Status light

Lights when the power is turned on.

E: Touch Screen

Displays messages, menu items, and operating status. Touch the screen lightly with your finger to select a menu item or button.

➡ Using Touch Screen

F: Stop button

Cancels operation when print, copy, scan, or fax transmission/reception job is in progress.

G: Black button

Starts black & white copying, scanning, faxing, etc.

H: Color button

Starts color copying, scanning, faxing, etc.

I: FAX Memory lamp

Lights when there are received or unsent documents stored in the printer's memory.

Using Touch Screen

The HOME screen on the touch screen appears when the printer is turned on.

Touch the HOME screen on the touch screen with your finger tip to select menus for copying, scanning, and other functions.

➡ HOME Screen
➡ Basic Operation of the touch screen

HOME Screen

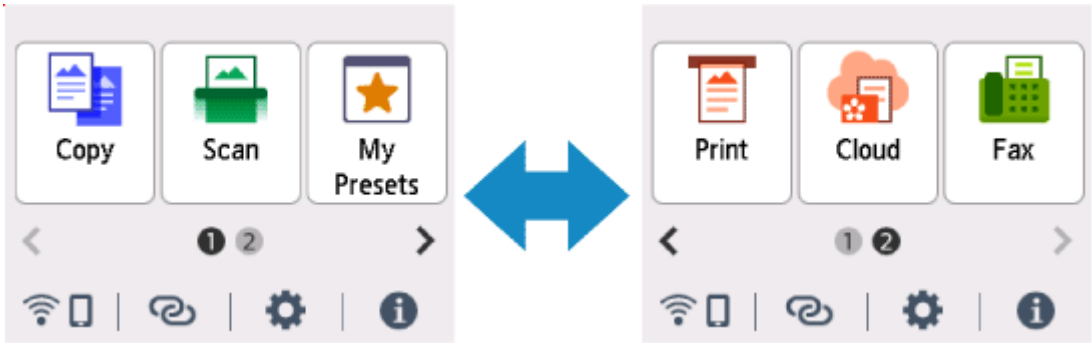

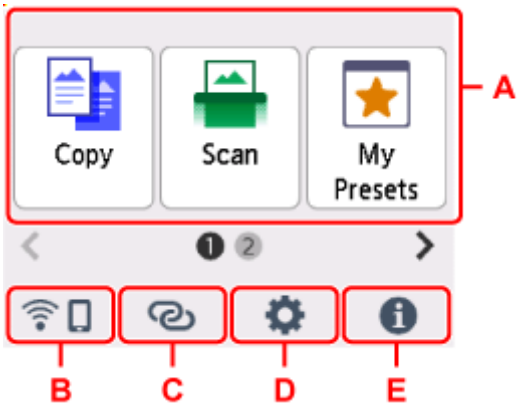

A: Basic menu

Select to copy or scan using the operation panel.

B: Network

Displays the current network status. Select to display the basic network information or to change the network settings.

The icon differs depending on the network of use or the network status.

Wi-Fi is enabled and the printer is connected to the wireless router.

Note

- Depending on the signal state, the icon will change.

(Signal strength: 81 % or more): You can use the printer over Wi-Fi without any problems.

(Signal strength: 51 % or more): The problem such as the printer cannot print may occur according to the network status. We recommend placing the printer near the wireless router.

(Signal strength: 50 % or less): The problem such as the printer cannot print may occur. Place the printer near the wireless router.

Wi-Fi is enabled but the printer is not connected to the wireless router.

Wireless Direct is enabled.

Network is disabled.

C: Wireless connect

Select to connect the printer to a smartphone/tablet over Wi-Fi through Easy wireless connect.

Tap this button to display a confirmation screen for starting a connection.

➡ Easy wireless connect

The printer has been already put into the standby mode for easy wireless connect and smartphone when a is displayed.

D: Setup

Displays the printer's setting menus or the maintenance menus.

(NEW) appears when there is an information from PIXMA/MAXIFY Cloud Link.

➡ Using PIXMA/MAXIFY Cloud Link

E: Hint

Displays quick guides about such procedures as loading paper and troubleshooting and such information as estimated ink level and system information.

If you set **Notification settings** to Enable, (NEW) is displayed when notification is sent to Canon.

➡ Notification settings

Note

- For details on how to change settings, refer to Changing Settings from Operation Panel.

Basic Operation of the touch screen

Touch the touch screen lightly with your finger tip or move your finger to access various functions or settings.

Important

- When operating the touch screen, make sure to avoid the followings, which may cause the printer to malfunction or damage the printer.
  - Strongly pressing the touch screen.
  - Pressing the touch screen with other than your finger (especially with sharpened tips, such as on ballpoint pens, pencils, or nails).
  - Touching the touch screen with wet or dirty hands.
  - Placing any objects on the touch screen.
- Do not attach a protective sheet on the touch screen. Removing it may damage the touch screen.

Tap

Touch lightly with your finger tip and immediately release.

Use to select an item or photo on the screen.

Touch

Touch lightly with your finger tip.

To move forward (or go back) menus or photos continuously, keep touching the forward (or back) mark.

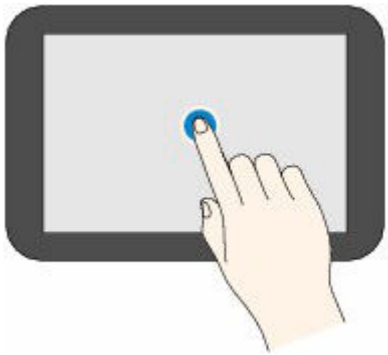

Flick

Flick your finger on the screen up, down, left, or right.

Use to switch menus or move forward or backward through photos.

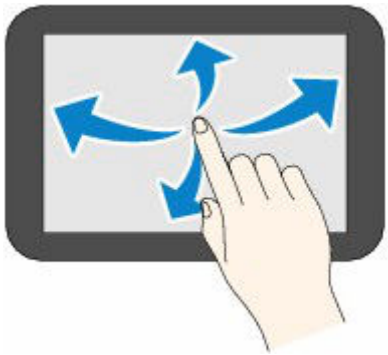

Drag

While lightly touching the screen, move your finger up, down, left, or right.

Use to view lists of items or move sliders.

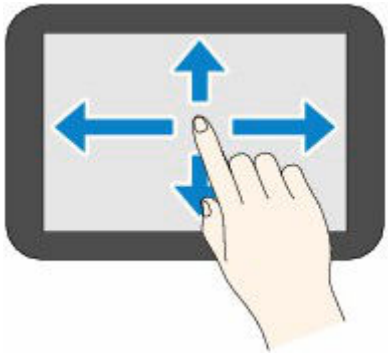

➡ Entering Numbers, Letters, and Symbols

Entering Numbers, Letters, and Symbols

In the printer, you can enter (or correct) the characters and numbers when the keyboard is displayed on the screen.

The character is allocated to each key displayed on the screen. Tap the key to enter the character.

After entry is completed, tap OK for determination.

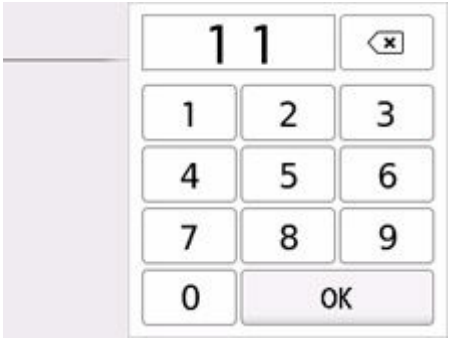

A 1@ Switch the character entry mode.

Switch the upper-/lower-case letters on a keyboard.

.@- Enter the symbols.

Input symbol

. @ - _ SP * # ! " , ; : ^ ` = / | ' ? $ % & + ( ) [ ] { } < > \ ~

SP: Blank (space) for one character

Delete the characters entered just before.

Insert a blank (space).

OK Determine the contents of entered data.

◀ ▶ Move the cursor.

To insert the character, move the cursor to the character on the right of the position where you want to insert the character.

To delete the character, move the cursor to the character you want to delete.

Note

- Only the input modes or characters available for input appear in their respective screens.
- You can switch the layout of a keyboard.

  ➡ Other printer settings

Power Supply

- Turning the Printer On and Off

Turning the Printer On and Off

- Checking that Power Is On
- Turning on the printer
- Turning off the printer

Checking that Power Is On

The touch screen is displayed when the printer is turned on.

If the status light is on, it means that the printer is on, even if the touch screen is off.

Note

- The touch screen display will turn off if the printer is not operated for about 5 minutes. To restore the display, touch the touch screen. The display is also activated again when an original is printed from a computer.

Turning on the printer

Press the ON button to turn on the printer.

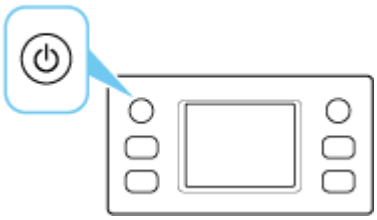

Note

- It may take a while for the printer to start printing immediately after you turn on the printer.
- If an error message is displayed on the touch screen, see When Error Occurred.
- You can set the printer to automatically turn on when a print or scan operation is performed from a computer connected by USB cable or wireless network. This feature is set to off by default.

  From the printer

  - ECO settings

  From the computer

  - Managing the Printer Power

Turning off the printer

1. Press the **ON** button to turn the printer off.

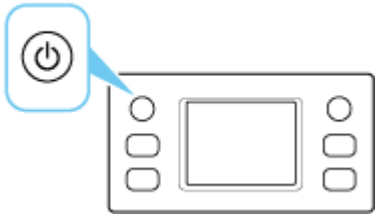

Note

- You can set the printer to automatically turn off when no operations are performed or no print jobs are sent to the printer for a certain interval. This feature is set to on by default.

2. Check that both the status light and touch screen display are off.

Important

- Before removing the power plug, press the power button and check that both the status light and the touch screen display are off. Removing the power plug while the status light is on/blinking or when the touch screen is on may cause drying or clogging of the print head, resulting in reduced print quality.

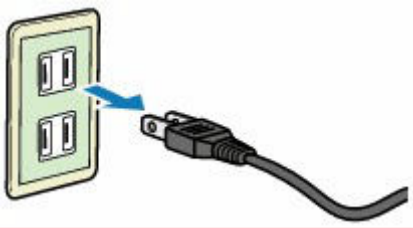

Loading Paper

- Loading Plain Paper
- Loading Photo Paper
- Loading Envelopes

Loading Plain Paper

You can load plain paper.

1. Prepare paper.

   Align the edges of paper. If paper is curled, flatten it.

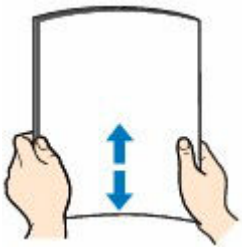

Note

- Align the edges of paper neatly before loading. Loading paper without aligning the edges may cause paper jams.
- If paper is curled, hold the curled corners and gently bend them in the opposite direction until the paper becomes completely flat.

  For more details on handling curled paper, see Check 3 in Paper Is Smudged/Printed Surface Is Scratched/Ink Blots/Paper Curl.

2. Pull out the cassette (A) from the printer.

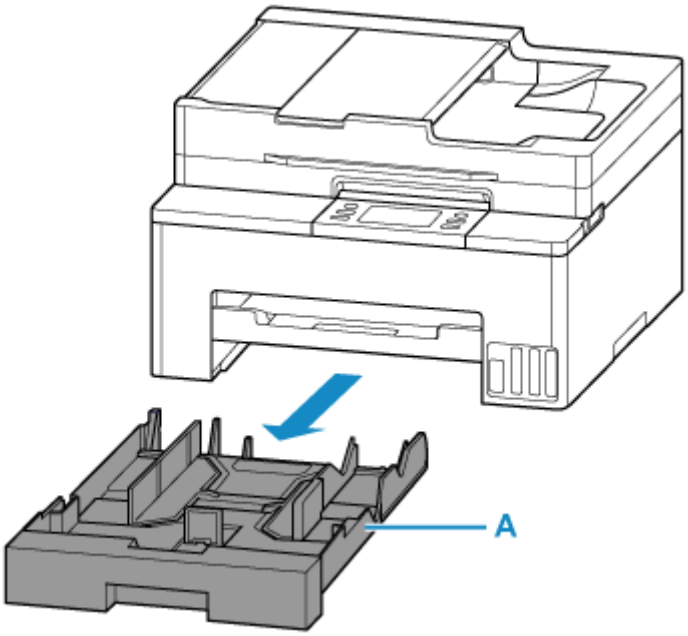

3. Slide paper guides (B) in front and (C) on right to open guides.

   Load paper stack in portrait orientation WITH THE PRINT SIDE FACING DOWN, and place it in center of cassette.

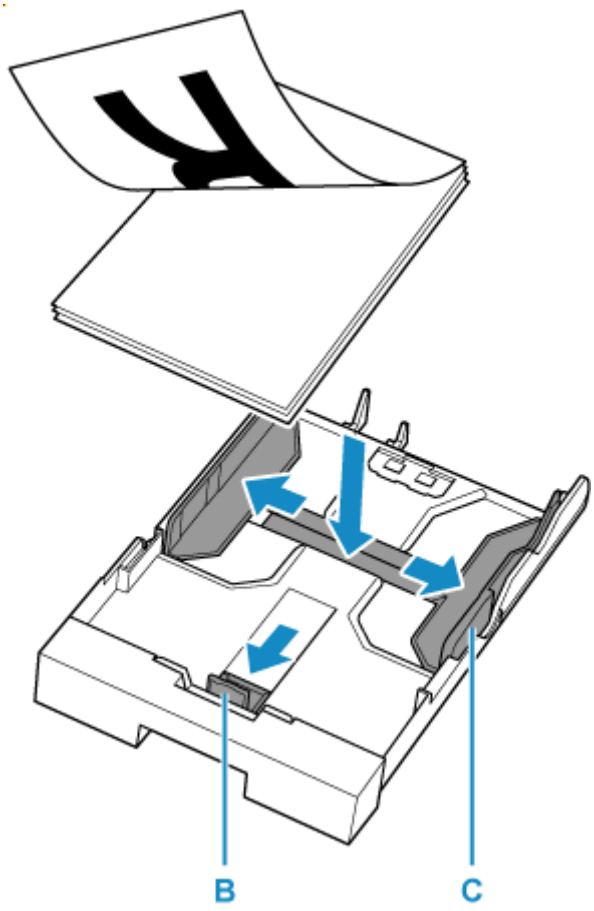

Important

- Always load paper in portrait orientation (D). Loading paper in landscape orientation (E) can cause paper jams.

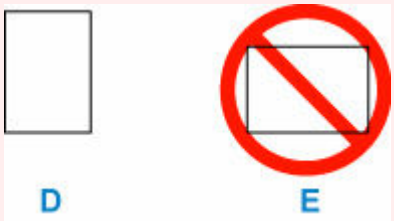

Note

- Align paper with the line on the cassette to load.

  Paper may not be fed into the printer correctly if it presses against the protrusion (F).

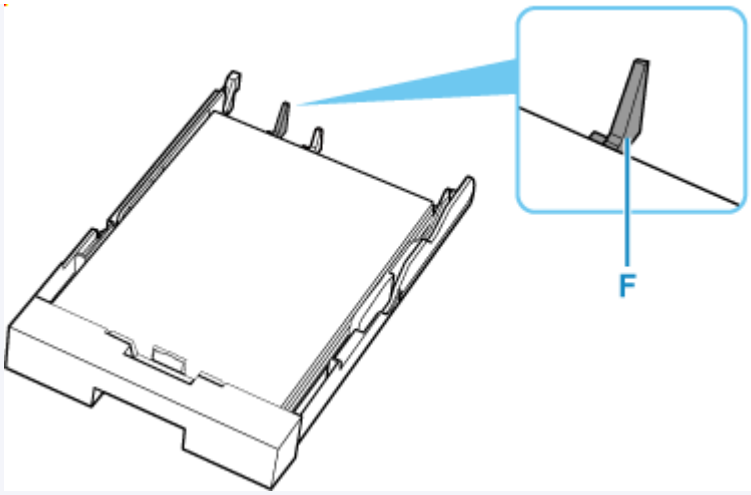

- To load legal-size paper in the cassette, pull the resizing tab (G) forward to extend the cassette. Condense the cassette while pulling the resizing tab (G) forward.

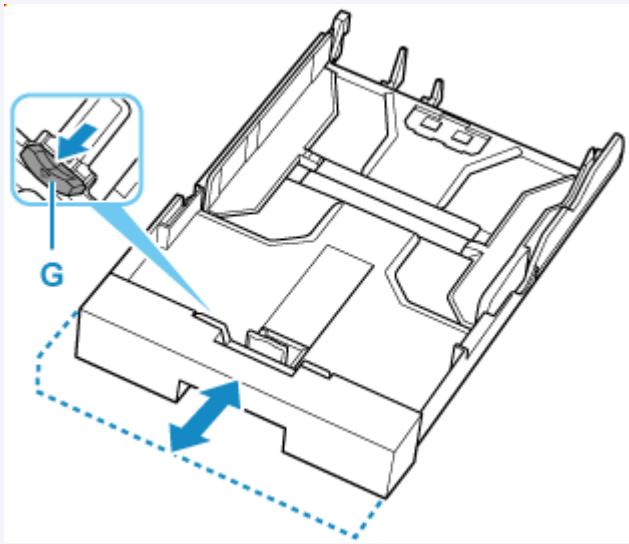

4. Move the paper guide and adjust the guides to edge of the paper stack.

Do not slide the paper guides too tightly against the paper. The paper may not be fed properly.

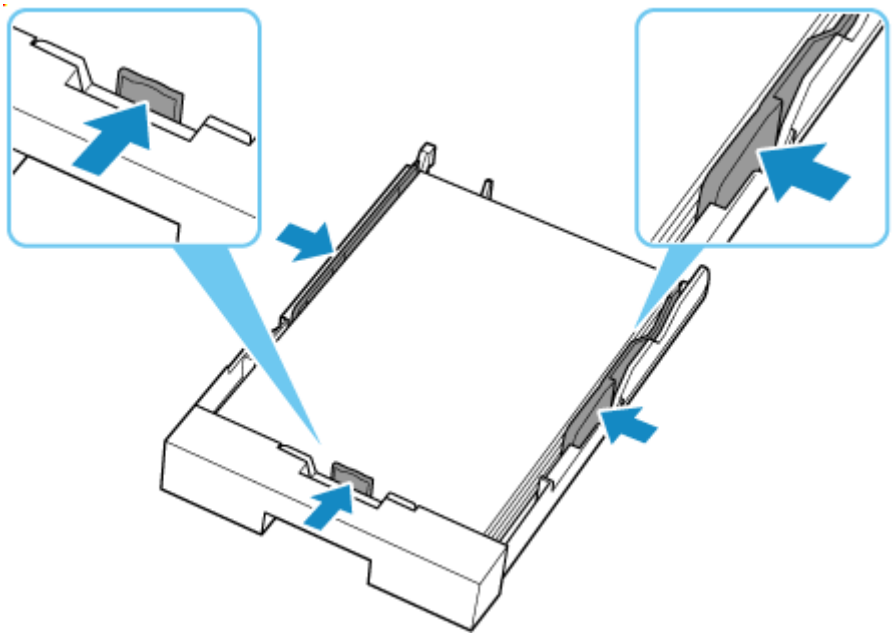

Note

- Do not load sheets of paper higher than the load limit mark (H).

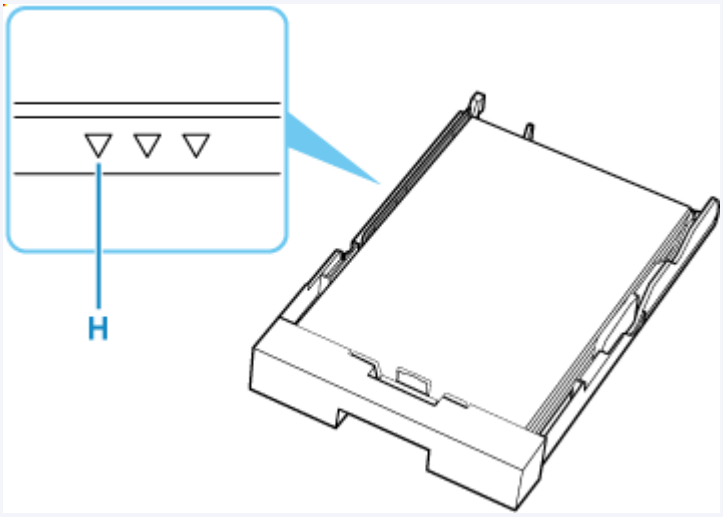

5. Insert cassette into printer.

Push the cassette into the printer until it stops.

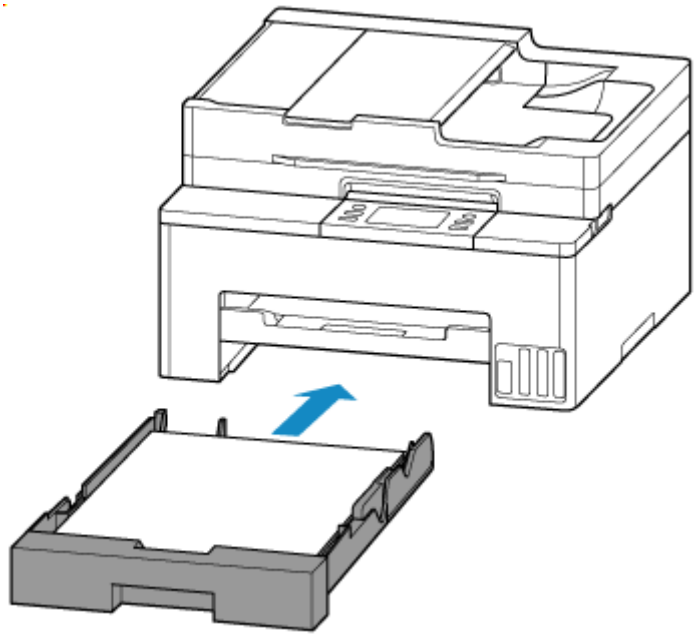

After inserting the cassette into the printer, the paper setting confirmation screen for the cassette appears on the touch screen.

Note

- When paper larger than A4 is loaded, the cassette is extended and thus stops in a protruding position from the printer. Forcefully pushing it in may cause damage to the printer or the cassette.

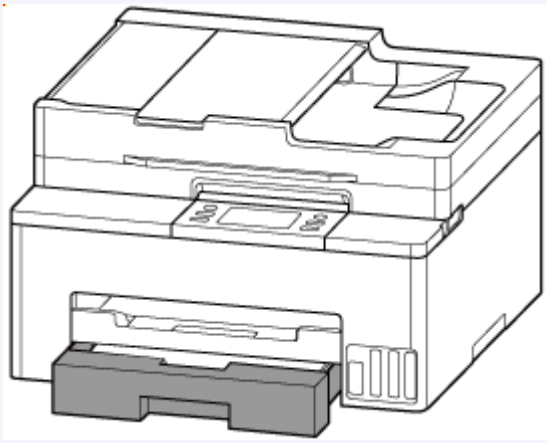

6. If page size on touch screen matches size of paper loaded in cassette, select **Yes**.

If not, select **Change** to change the settings in accordance with the size of the loaded paper.

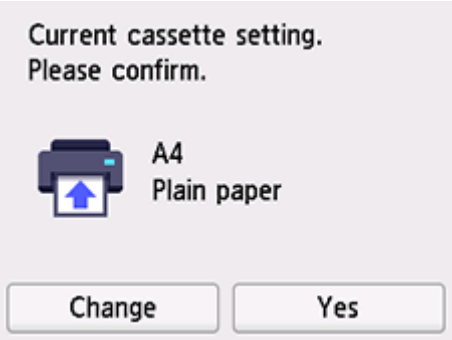

Note

- See Detect paper width when you want to hide the screen for confirming the setting of paper.

7. Pull out the paper output tray (I).

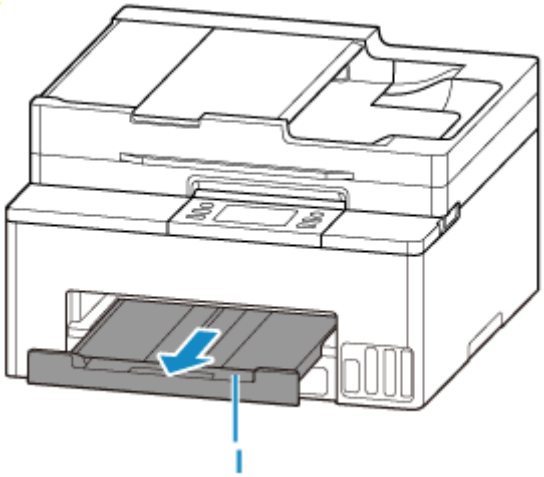

Note

- To prevent incorrect printing, this printer has a function that detects whether the settings for the paper loaded on the cassette matches the paper settings. Before printing, make print settings in accordance with the paper settings.

Related Information

- Handling Paper
- Unsupported Media Types

Loading Photo Paper

You can load photo paper.

1. Prepare paper.

   Align the edges of paper. If paper is curled, flatten it.

   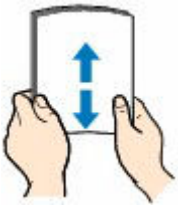

   Note

   - Align the edges of paper neatly before loading. Loading paper without aligning the edges may cause paper jams.
   - If paper is curled, hold the curled corners and gently bend them in the opposite direction until the paper becomes completely flat.

     For more details on handling curled paper, see Check 3 in Paper Is Smudged/Printed Surface Is Scratched/Ink Blots/Paper Curl.
   - When using Photo Paper Plus Semi-gloss SG-201, even if the sheet is curled, load one sheet at a time as it is. If you roll up this paper to flatten, this may cause cracks on the surface of the paper and reduce the print quality.

2. Pull out the cassette (A) from the printer.

   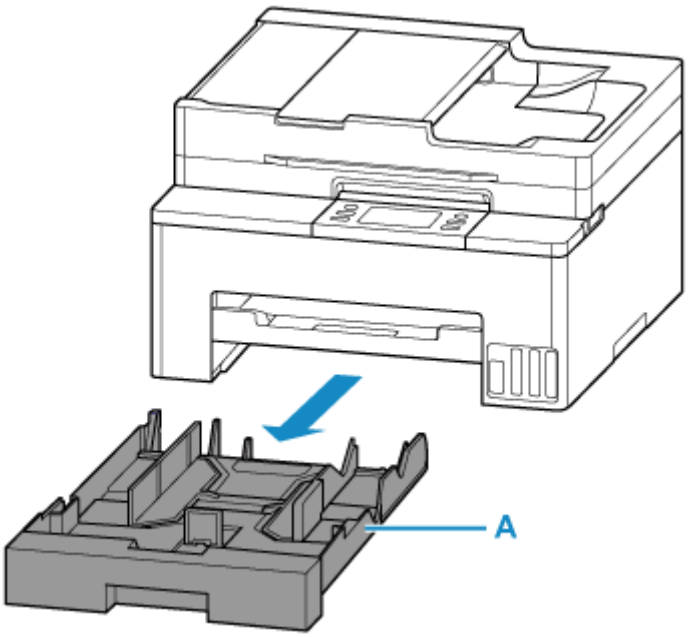

3. Slide paper guides (B) in front and (C) on right to open guides.

Load paper stack in portrait orientation WITH THE PRINT SIDE FACING DOWN, and place it in center of cassette.

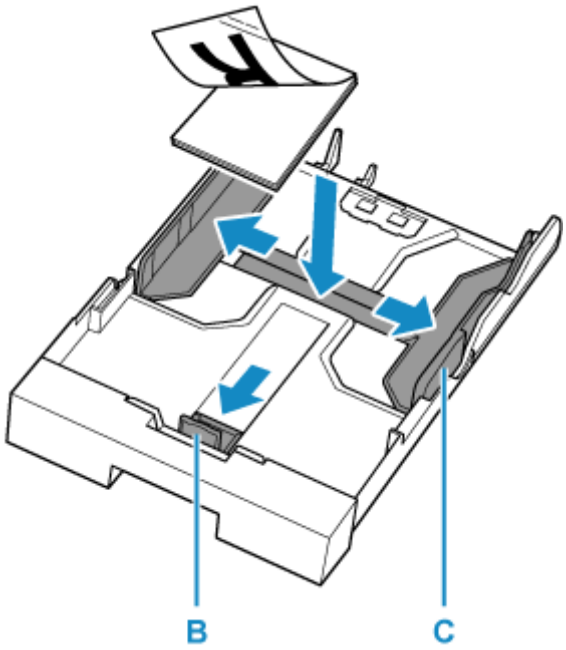

Important

- Always load paper in portrait orientation (D). Loading paper in landscape orientation (E) can cause paper jams.

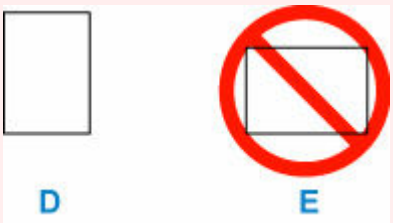

Note

- For paper with a front and a back side, such as photo papers, load the whiter side (the glossy side) face down.
- Align paper with the line on the cassette to load.

  Paper may not be fed into the printer correctly if it presses against the protrusion (F).

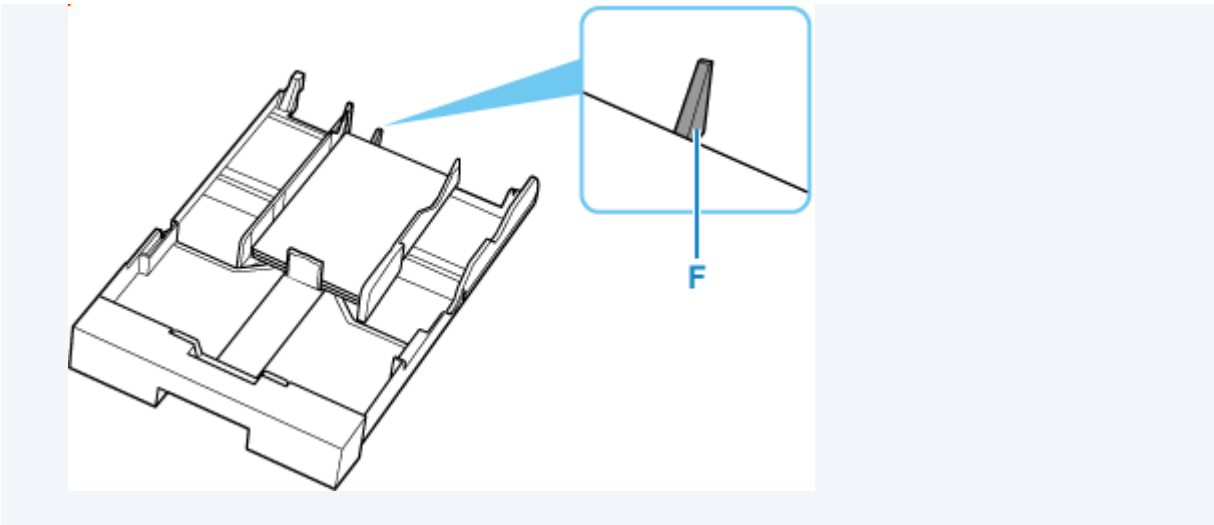

4. Move the paper guide and adjust the guides to edge of the paper stack.

Do not slide the paper guides too tightly against the paper. The paper may not be fed properly.

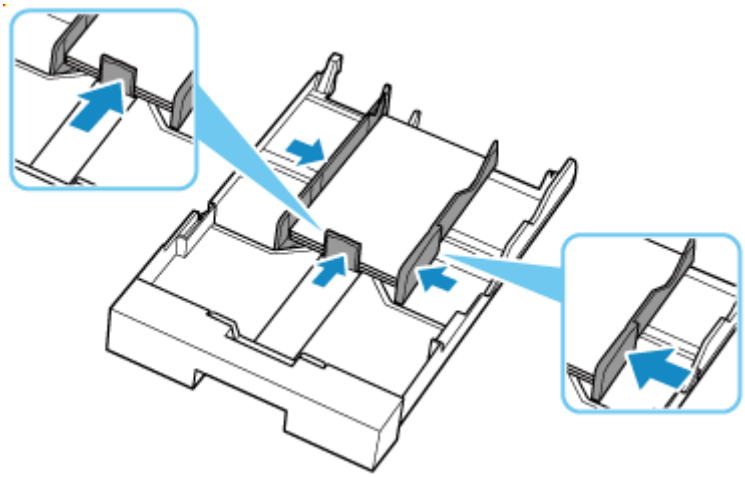

5. Insert cassette into printer.

Push the cassette into the printer until it stops.

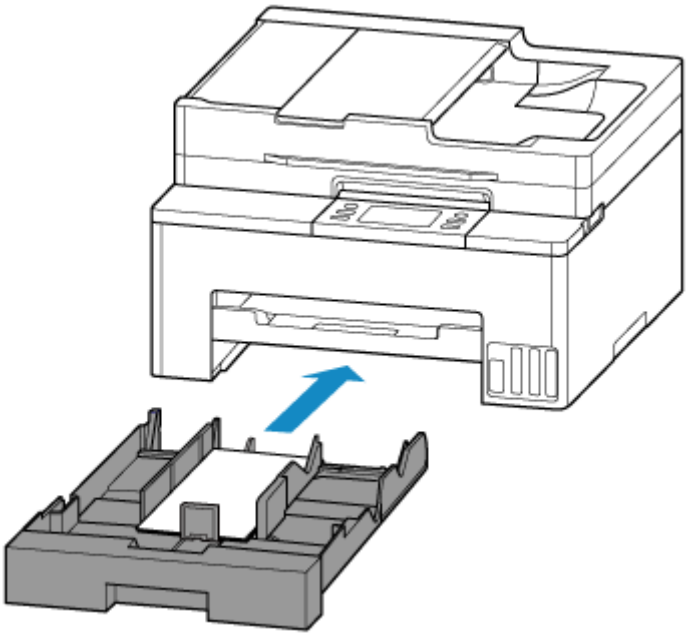

After inserting the cassette into the printer, the paper setting confirmation screen for the cassette appears on the touch screen.

6. If page size on touch screen matches size of paper loaded in cassette, select **Yes**.

If not, select **Change** to change the settings in accordance with the size of the loaded paper.

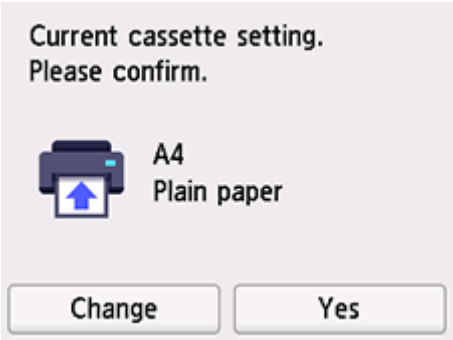

Note

- See Detect paper width when you want to hide the screen for confirming the setting of paper.

7. Pull out the paper output tray (G).

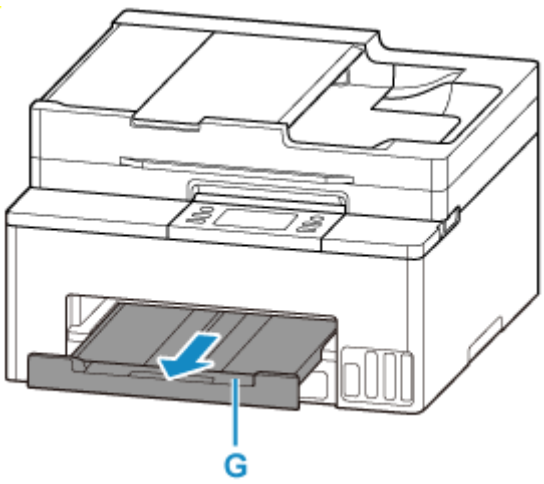

Note

- There are various types of paper, such as paper with a special surface coating for printing photos at optimal quality and paper suitable for documents. Each media type has specific preset settings (how ink is used and sprayed, distance from nozzles, etc.), that allow you to print to that type with optimal image quality. The wrong paper settings may cause poor printout color quality or scratches on the printed surface. If you notice blurring or uneven colors, increase the print quality setting and try printing again.
- To prevent incorrect printing, this printer has a function that detects whether the settings for the paper loaded on the cassette matches the paper settings. Before printing, make print settings in accordance with the paper settings.

Related Information

- Handling Paper
- Unsupported Media Types

Loading Envelopes

The address is automatically rotated and printed according to the envelope's direction by specifying with the printer driver properly.

Important

- Do not use the following envelopes. They could jam in the printer or cause the printer to malfunction.
  - Envelopes with an embossed or treated surface
  - Envelopes with a double flap
  - Envelopes whose gummed flaps are already moistened and adhesive

1. Prepare envelopes.

- Press down on all four corners and edges of the envelopes to flatten them.

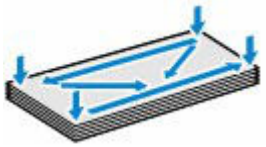

- If the envelopes are curled, hold the opposite corners and gently twist them in the opposite direction.

- If the corner of the envelope flap is folded, flatten it.
- Use a pen to press the leading edge in the inserting direction flat and sharpen the crease.

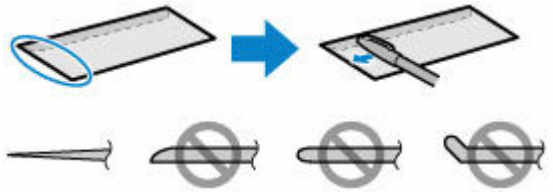

The figures above show a side view of the leading edge of the envelope.

Important

- The envelopes may jam in the printer if they are not flat or the edges are not aligned. Make sure that no curl or puff exceeds 0.12 in. (3 mm).

2. Pull out the cassette (A) from the printer.

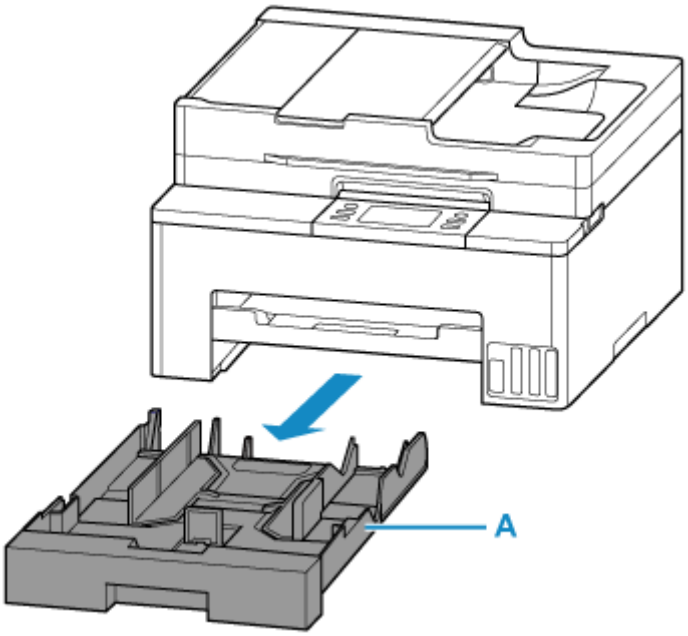

3. Slide paper guides (B) in front and (C) on right to open guides.

Load envelopes in portrait orientation WITH THE PRINT SIDE FACING DOWN, and place it in center of cassette.

Up to 10 envelopes can be loaded at once.

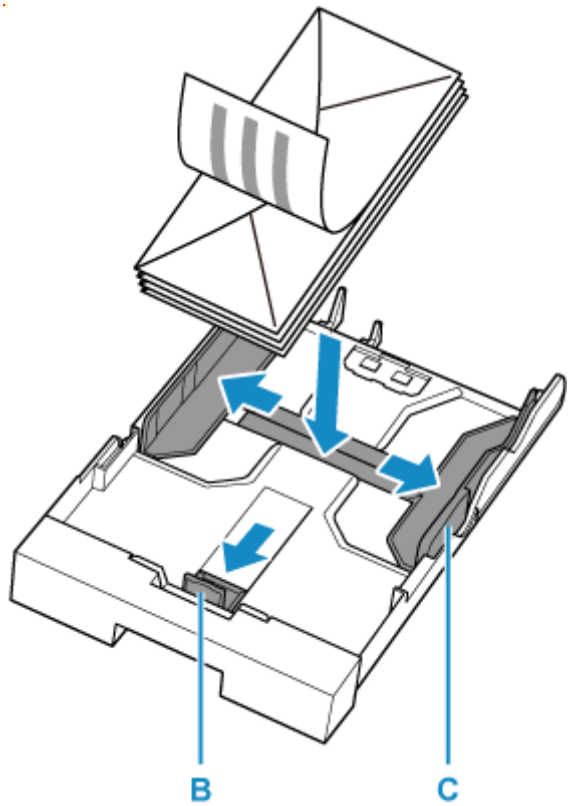

Set the envelopes in portrait orientation with the address side down and the folded flap on the left.

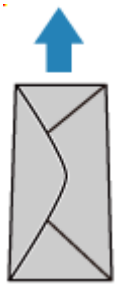

Note

- Align paper with the line on the cassette to load.

  Paper may not be fed into the printer correctly if it presses against the protrusion (D).

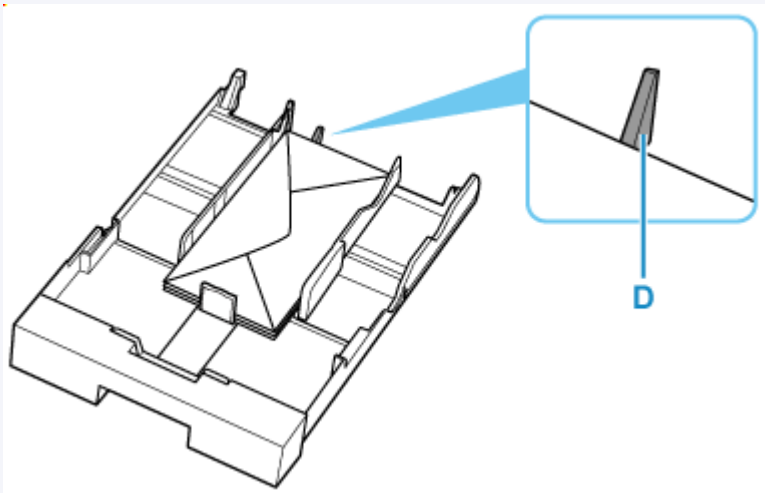

4. Move the paper guide and adjust the guides to edge of the paper stack.

Do not slide the paper guides too tightly against the paper. The paper may not be fed properly.

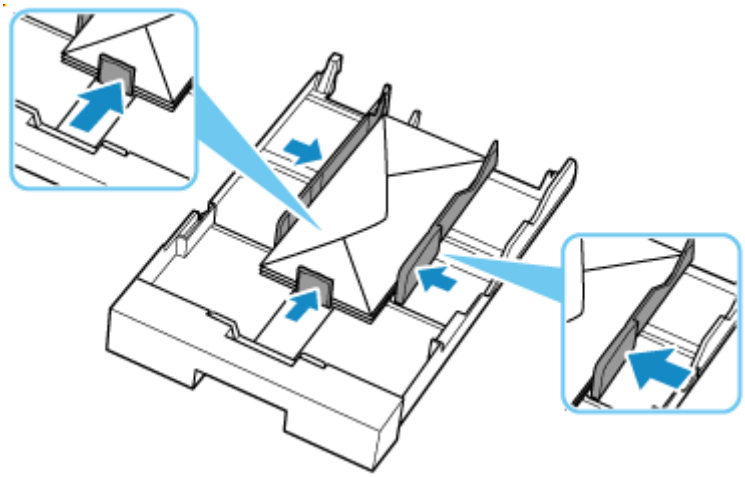

5. Insert cassette into printer.

Push the cassette into the printer until it stops.

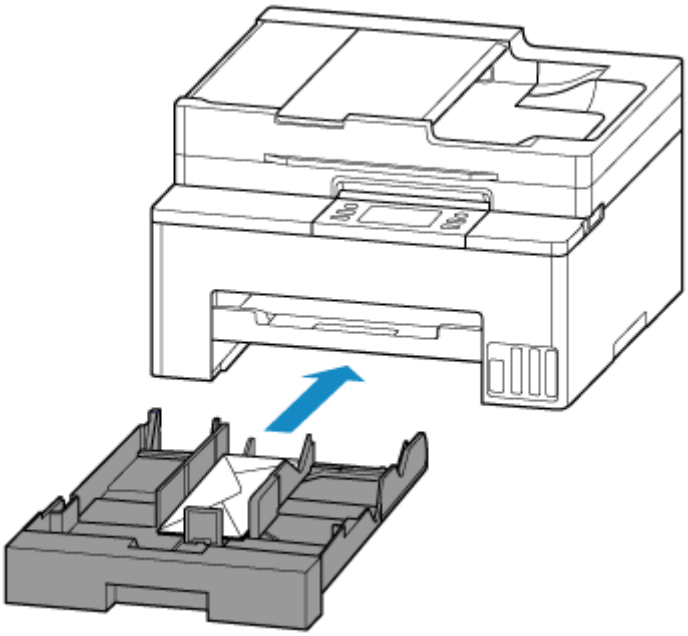

After inserting the cassette into the printer, the paper setting confirmation screen for the cassette appears on the touch screen.

6. If page size and media type shown on touch screen match size and type of paper loaded in cassette, select **Yes**.

   If not, select **Change** to change the settings in accordance with the size of the loaded paper.

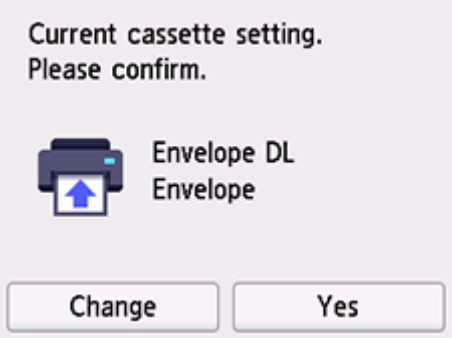

Note

- See Detect paper width when you want to hide the screen for confirming the setting of paper.

7. Pull out the paper output tray (E).

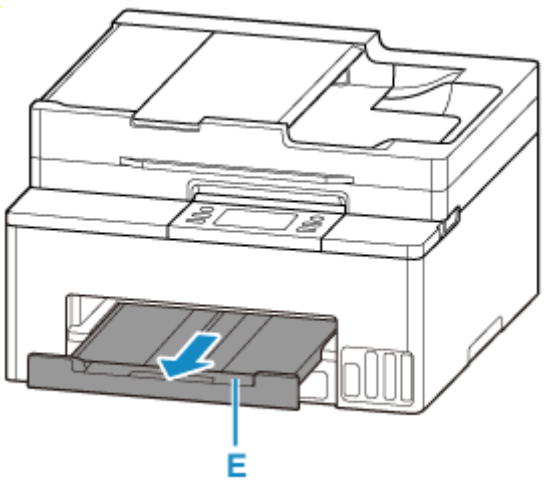

Note

- To prevent incorrect printing, this printer has a function that detects whether the settings for the paper loaded on the cassette matches the paper settings. Before printing, make print settings in accordance with the paper settings.

Related Information

- Handling Paper
- Unsupported Media Types

Loading Originals

- Where to Load Originals
- Loading Originals on Platen
- Loading Documents in the ADF (Auto Document Feeder)
- Loading Based on Use
- Supported Originals

Where to Load Originals

The printer has two positions to load originals: platen and ADF (Auto Document Feeder).

Select the position to load the original according to the size, type, or usage.

Note

- For details on the supported originals, see below.

  ➡ Supported Originals

Loading Documents, Photos, or Book on Platen

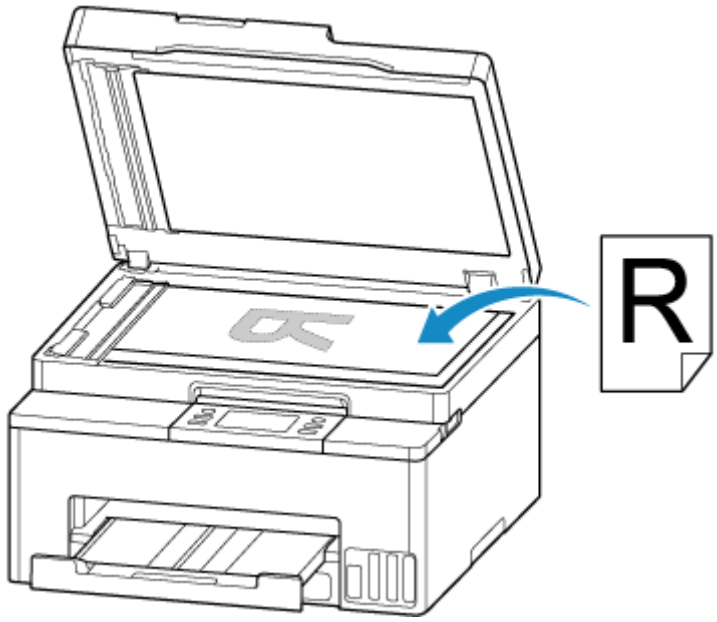

Loading Two or More Sheets of Document of the Same Size and Thickness in the ADF

You can also load a sheet of document in the ADF.

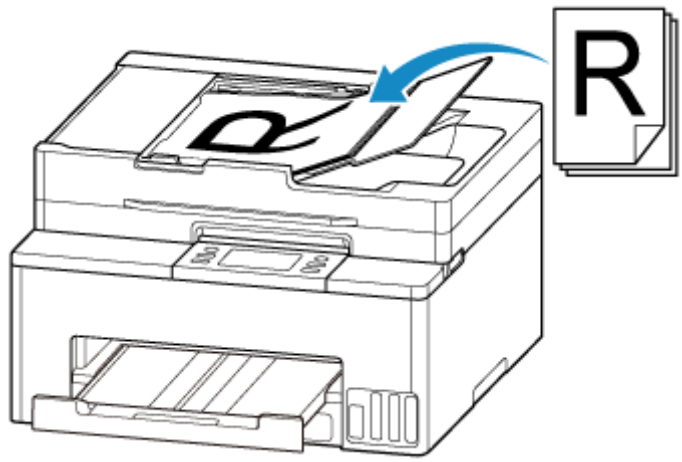

Note

- To scan the original at optimum quality, load it on the platen.

Loading Originals on Platen

1. Open the document cover (A).

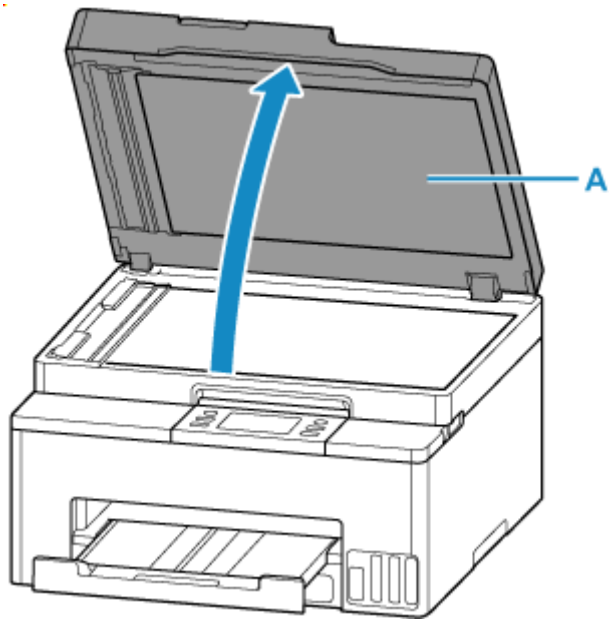

2. Load original WITH THE SIDE TO SCAN FACING DOWN on platen.

➡ Loading Based on Use
➡ Supported Originals

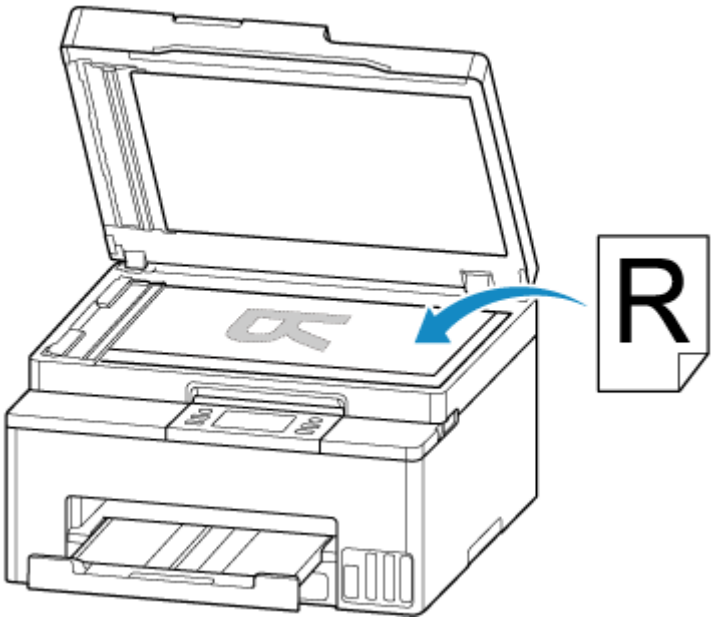

Important

- Be sure to observe the following when loading the original on the platen. Failure to observe the following may cause the scanner to malfunction or the platen glass to break.
  - Do not place any objects weighing 4.4 lb (2.0 kg) or more on the platen glass.

– Do not put any pressure of 4.4 lb (2.0 kg) or more on the platen glass, such as pressing down the original.

3. Close the document cover gently.

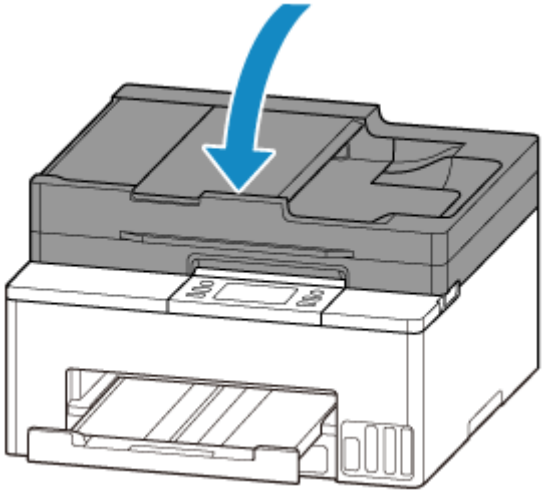

Important

- After loading the original on the platen, be sure to close the document cover before starting to copy or scan.

Loading Documents in the ADF (Auto Document Feeder)

Important

- Be careful not to let anything get inside the document output slot. It may cause damage.

Note

- To scan a document at optimum quality, load it on the platen.
- The double-sided original cannot be scanned automatically with ADF.

1. Make sure any original has been removed from platen.

2. Open document tray (A).

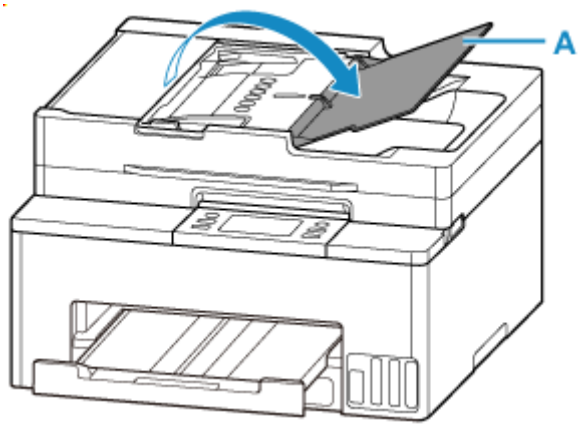

3. Slide the document guide (B) all the way out.

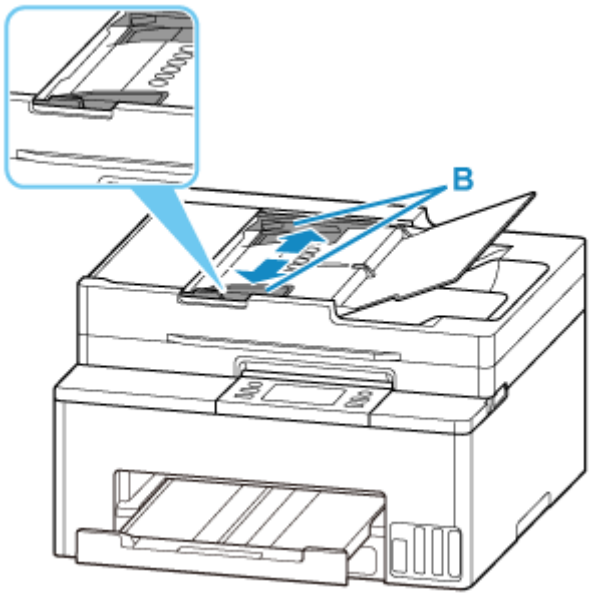

4. Insert document WITH THE SIDE TO SCAN FACING UP in document tray, until you hear a beep sound.

Insert the document until it stops.

Note

- For details on the supported originals, see below.

  ➡ Supported Originals

5. Adjust document guide to match width of document.

Do not slide the document guide too tightly against the document. The document may not be fed properly.

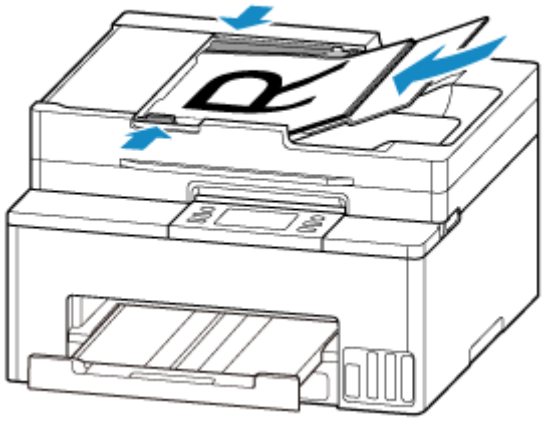

Loading Based on Use

Load the original in the correct position according to the function to use. If you do not load the original correctly, it may not be scanned properly.

Originals	Function	How to Load
Magazines, Newspapers, and Documents	**Copying or Faxing**	Loading the Original to Be Aligned with the alignment mark
	Scanning by specifying a standard size If you scan using the operation panel, select **Document** or **Photo** for **Doc.type** in **Scan** and specify a standard size for **Scan size** to scan originals.	
Photos and Postcards	**Scanning only one original** If you scan using the operation panel, follow the operation below. • Select **Photo** for **Doc.type** in **Scan** and specify **Auto scan** for **Scan size** to scan originals.	Loading Only One Original in Center of Platen
	Scanning two or more originals If you scan using the operation panel, follow the operation below. • Select **Photo** for **Doc.type** in **Scan** and specify **Auto multi scan** for **Scan size** to scan two or more originals.	Loading Two or More Originals on Platen

Loading the Original to Be Aligned with the alignment mark

Place the original WITH THE SIDE TO SCAN FACING DOWN on the platen and align it with the alignment mark . Portions placed on the diagonally striped area cannot be scanned.

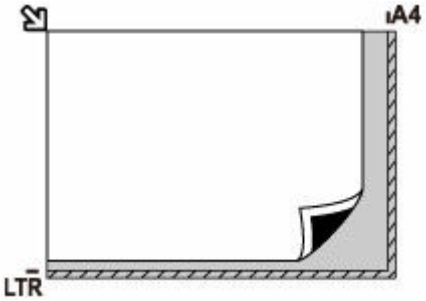

Important

- The printer cannot scan the striped area (A) (0.04 in. (1 mm) from the edges of the platen glass).

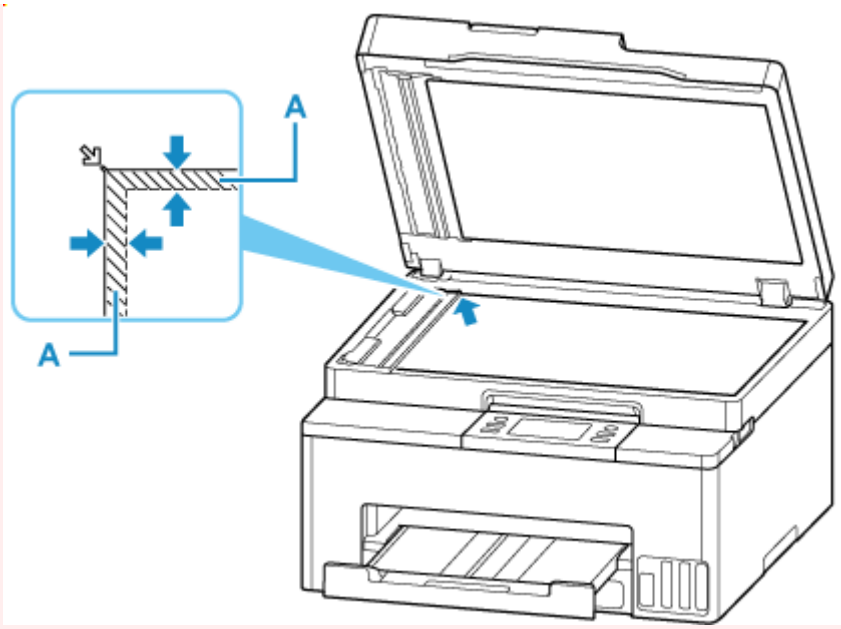

Loading Only One Original in Center of Platen

Place the original WITH THE SIDE TO SCAN FACING DOWN, with 0.40 in. (1 cm) or more space between the edges (diagonally striped area) of the platen. Portions placed on the diagonally striped area cannot be scanned.

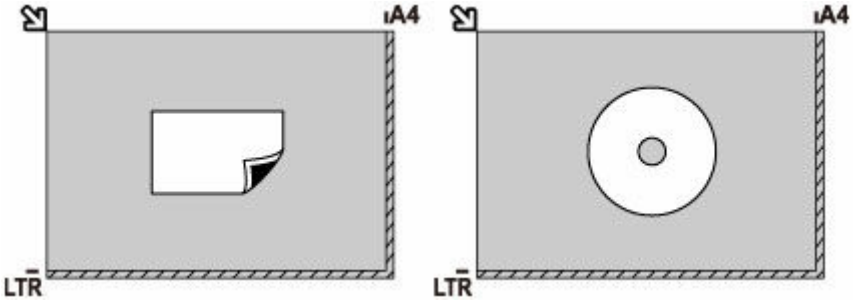

Loading Two or More Originals on Platen

Place the originals WITH THE SIDE TO SCAN FACING DOWN. Allow 0.40 in. (1 cm) or more space between the edges (diagonally striped area) of the platen and the originals, and between the originals. Portions placed on the diagonally striped area cannot be scanned.

You can place up to 12 items.

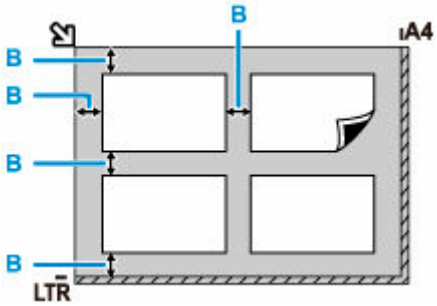

B: More than 0.40 in. (1 cm)

Note

- The Skew Correction function automatically compensates for the originals placed at an angle of up to approximately 10 degrees. Slanted photos with a long edge of 7.1 in. (180 mm) or more cannot be corrected.
- Non-rectangular or irregular shaped photos (such as cut out photos) may not be scanned properly.

Supported Originals

Platen

Item	Details
Types of originals	Text document, magazine, or newspaper Printed photo, postcard, business card, or disc (BD/DVD/CD, etc.) Documents that are not suitable for the ADF
Size (width x height)	Max. 8.5 x 11.7 in. (216 x 297 mm)
Quantity	One or more sheets*
Thickness	Max. 0.2 in. (5 mm)

* Two or more originals can be loaded on the platen depending on the selected function.

➡ Loading Based on Use

In the ADF (Auto Document Feeder)

Item	Details
Kind of original	Plain-paper documents with multiple pages of the same size, thickness, and weight
Size	A4, Letter, Legal Max. 8.5 x 14.0 in. (216 x 356 mm) Min. 8.3 x 11.0 in. (210 x 280 mm)
Quantity	A4/Letter: Max. 35 sheets (20 lb (75 g /m^2) paper), up to 0.14 in. (3.5 mm) high Legal: Max. 5 sheets (20 lb (75 g /m^2) paper), up to 0.02 in. (0.5 mm) high Other sizes: 1 sheet
Thickness	0.003 to 0.005 in. (0.07 to 0.13 mm)
Weight	16.0 to 25.3 lb (60 to 95 g /m^2)

Note

- Make sure any liquids on documents, such as glue, ink, or correction fluid are dry before loading.

  Do not load glued documents in the ADF, even if the glue is dry, because this may cause paper jams.
- Remove all staples, paper clips, or other fasteners before feeding documents.
- Load Legal-sized documents in the ADF.
- Do not load these kinds of documents in the ADF, which may cause paper jams.
  - Wrinkled or creased documents
  - Curled documents
  - Torn documents
  - Documents with holes

- Glued documents
- Documents with sticky notes
- Documents on carbon paper
- Documents on coated paper
- Documents on onion skin or other thin paper
- Photos or excessively thick documents

Refilling Ink Tanks

- Refilling Ink Tanks
- Checking Ink Level

Refilling Ink Tanks

When remaining ink cautions or errors occur, the message will appear on the touch screen to inform you of the error. In this state, the printer cannot print. Check the remaining ink level with the ink tank indicator on the front of the printer. If the ink level is near the lower limit line (A), refill the ink tank.

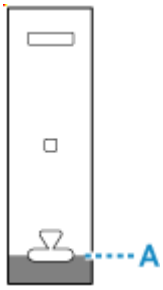

Note

- If print results become faint or streaks appear despite sufficient ink levels, see Maintenance Procedure.
- For precautionary notes on handling ink bottles, see Notes on ink bottles.

Refilling Procedure

When you refill ink tanks, follow the steps below.

Important

- Please ensure the printer remains flat after initial setup and is NOT turned upside down or on its side, as ink in the printer may leak.

1. Check that printer is turned on.

2. Open the ink tank cover (B) .

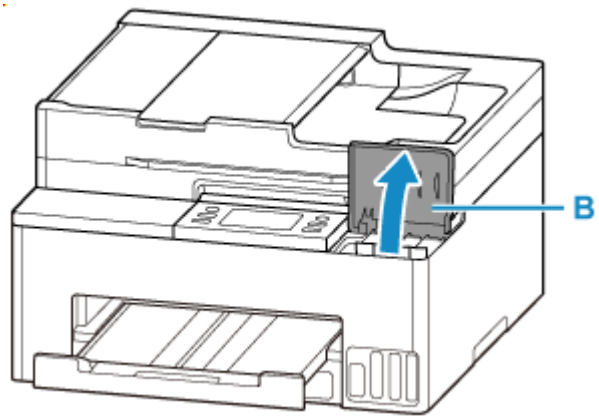

3. Unlock the ink tank (C) being refilled, then open the cap.

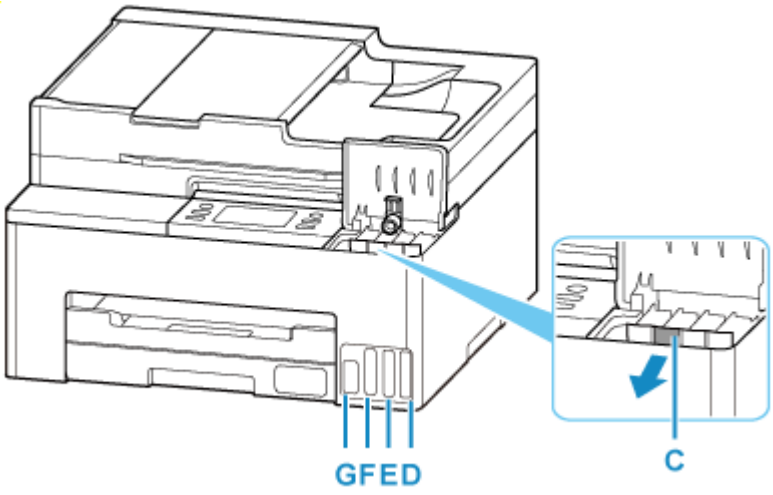

D: Yellow
E: Magenta
F: Cyan
G: Black

Important

- Carefully open the tank cap of the ink tank. Ink on the inside of the tank cap may spatter when opening it.

4. Hold the ink bottle upright and gently twist the bottle cap (H) to remove.

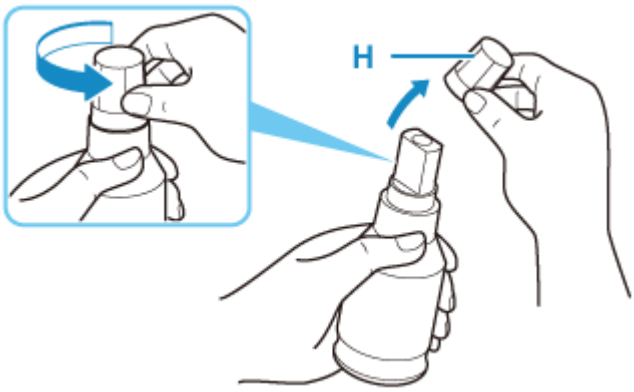

Important

- Do not shake the ink bottle. Ink may spatter when opening the cap.

5. Refill the ink tank.

Aligning the ink bottle's tip with the ink tank's inlet (I), slowly stand the bottle upside down, and push the bottle into the inlet.

The ink tank is refilled. Support the bottle with your hand so that it does not fall.

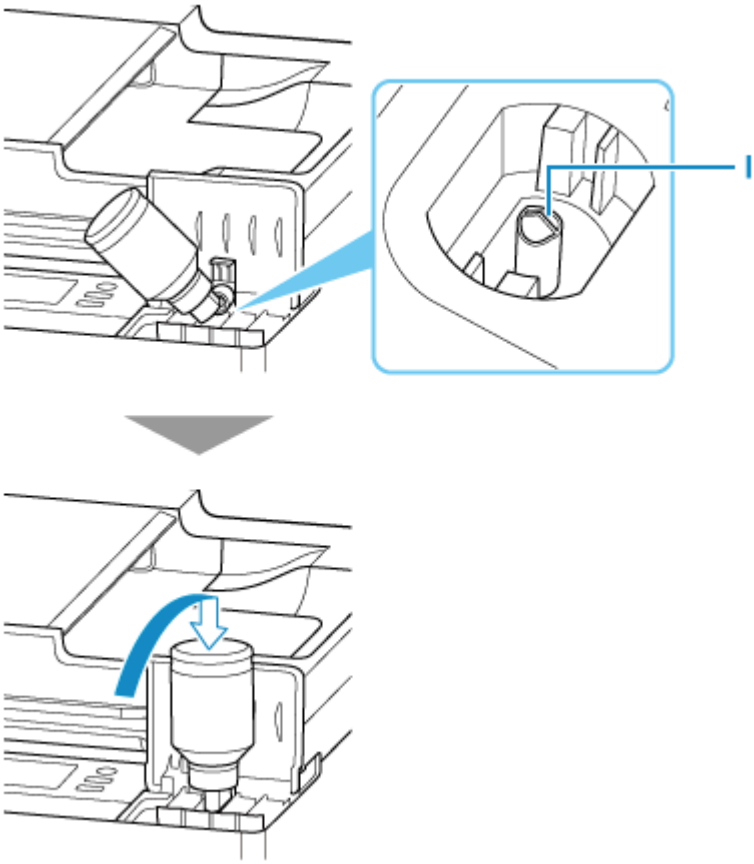

Important

- Make sure that each color of ink tanks is filled with corresponding color of ink bottles.
- If ink is not injected into the ink tank, slowly remove and insert the ink bottle.

6. Once ink reaches the upper limit line, remove the ink bottle from the inlet.

Hold up the ink bottle slightly and remove the bottle from the inlet while slowly tilting it.

Important

- Do not leave ink bottles in ink tanks.
- Close the bottle cap of the ink bottle securely and store the ink bottle upright.

7. Close the tank cap of the ink tank.

Make sure the tank cap is completely inserted.

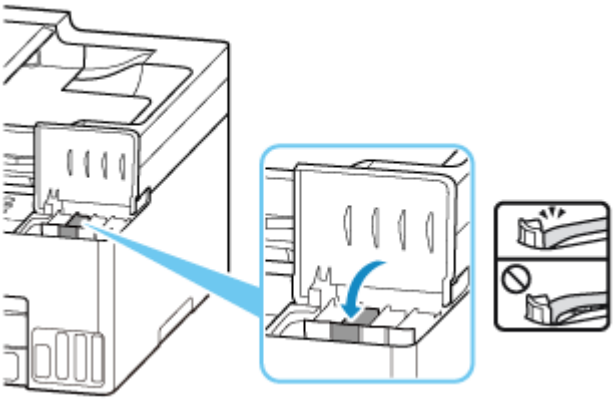

8. Close the ink tank cover.

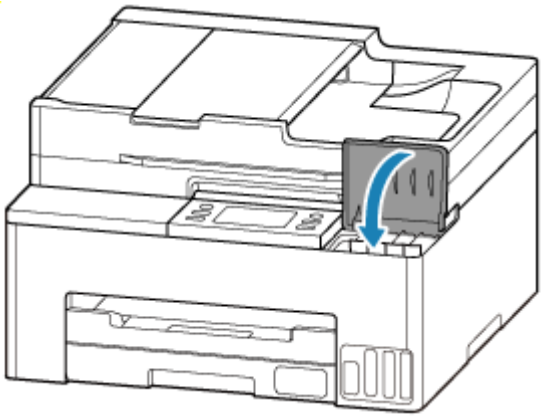

Notes on ink bottles

Important

- Keep out of reach of children.
- Do not drink ink.
- If ink is accidentally licked or swallowed, rinse out your mouth or drink one or two glasses of water and obtain medical advice immediately. If ink gets into your eyes, flush them with water right away, and obtain medical advice immediately.
- If ink gets on your skin, wash the area with soap and water immediately. If irritation to your skin persists, obtain medical advice immediately.
- When you store ink bottles, close bottle caps completely and place bottles in standing position. If the ink bottles are laid down, ink may leak.
- When refilling ink tanks, take sufficient care to prevent ink from spattering onto surroundings.
- Ink may stain clothes or other belongings permanently. Washing may not remove ink stains.
- Do not use ink bottles and ink contained therein except to refill tanks of printers specified by Canon.
- Do not leave ink bottles in areas exposed to high temperature, such as near fire or a heater or in a car. Bottles may warp and cause ink leakage or ink may become poor quality.

- Do not subject ink bottles to impacts. Ink bottles may be damaged or bottle caps may come off by such impact, and ink may leak.
- Do not transfer ink to other containers. This may result in accidental ingestion, inappropriate use, or poor ink quality.
- Do not mix ink with water or other ink. This may damage the printer.
- Once an ink bottle has been opened, do not leave it with bottle cap off. Ink will dry out, possibly preventing proper operation of the printer when an ink tank is refilled using this bottle.
- To obtain optimum print quality, we recommend to refill the ink tank with ink up to the upper limit line at least once a year.

Note

- Color ink may be consumed even when printing a black-and-white document or when black-and-white printing is specified. Every ink is also consumed in the standard cleaning and deep cleaning of the print head, which may be necessary to maintain the performance of the printer.

  When ink runs low, promptly refill it.

  ➡ Ink Tips

Checking Ink Level

Check ink level with the ink tank indicator on the front of the printer.

When ink reaches the upper limit line (A), ink is full.

When ink is near the lower limit line (B), ink is running low. Refill the ink tank.

Note

- To check the remaining ink level, visually inspect the remaining ink in the ink tank.

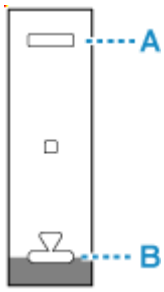

Note

- If a remaining ink error occurs, the error message appears on the touch screen.

  ➡ When Error Occurred

- To ensure you receive premium print quality and to help protect your print head, a certain amount of ink remains in the ink tank when the printer indicates to refill the ink tank. The estimated page yields of the ink bottle do not include this amount.
- Ink flows from the ink tanks to the inside of the printer. Ink may seem to run out fast due to this procedure when you start using the printer or after transporting it.

Restrictions

When connecting another device while a device (such as a computer) is already connected to the printer, connect it using the same connection method as the connected device.
If you connect using a different connection method, the connection to the device in use will be disabled.
However, you can use a Wi-Fi connection and Wireless Direct at the same time.

For restrictions, see the following.

Connect via wireless router

- You cannot use the printer over Wi-Fi and wired connections at the same time.
- Make sure your device and the wireless router are connected. For details on checking these settings, see the manual supplied with the wireless router or contact its manufacturer.
  As for a device already connected to the printer without using a wireless router, reconnect it via a wireless router.
- Configuration, router functions, setup procedures and security settings of wireless routers vary depending on the system environment. For details, see the manual for your wireless router or contact its manufacturer.
- Depending on your country or region, this printer does not support wireless networking standards using the 5 GHz band.
- If the current channel bandwidth setting on your device does not include 20 MHz, TKIP cannot be used for a security protocol. Change the setting to something that includes 20 MHz. For improved security, we recommend that you set to AES together with WPA2 or higher security.
  The connection between your device and the wireless router will be temporarily disabled while the setting is changed. Do not proceed to the next screen of this guide until setup is complete.
- When connecting to Wi-Fi outdoors, do not connect to a 5 GHz network (SSID).
  The 5 GHz band available for use with the printer includes the channels that are allowed for indoor use only, depending on your country or region.
  For details on the 5 GHz network (SSID) of your wireless router, see the manual supplied with the wireless router, or contact its manufacturer.
- For office use, especially when connecting with IEEE802.1X/EAP (WPA/WPA2/WPA3 Enterprise), consult your network administrator.
- Note that if you connect to a network with no security protection, your personal information could be disclosed to a third party.

Wireless Direct

Important

- If a device is connected to the Internet via a wireless router, and you then connect it to a printer in Wireless Direct mode, the existing connection between the device and wireless router will be disabled. In that case, the connection of the device may switch to a mobile data connection automatically depending on your device. When you connect to the Internet using a mobile data connection, charges may apply depending on your contract.

- When you connect a device and the printer using Wireless Direct, the connection information will be saved to Wi-Fi settings. The device may be connected to the printer automatically even after disconnecting it or connecting it to another wireless router.
- To prevent automatic connection to the printer in Wireless Direct mode, change the connection mode after using the printer, or set not to connect automatically in the Wi-Fi settings of the device.
  For details on changing the settings of your device, see the manual supplied with the device or contact its manufacturer.

- If you connect a device and the printer using Wireless Direct, Internet connection may become unavailable depending on your environment. In that case, web services for the printer cannot be used.
- In Wireless Direct mode, you can connect up to five devices at the same time. If you try to connect a sixth device while five devices are already connected, an error will appear.
  If an error appears, disconnect a device that does not use the printer, and then redo the settings.
- Wireless Direct connects a device (such as a computer) to the printer at 2.4 GHz.
  To connect at 5 GHz, enable Wireless Direct, and then set the frequency band to 5 GHz.
  Depending on your country or region, this printer does not support Wireless Direct using the 5 GHz band.
- Devices connected to the printer using Wireless Direct cannot communicate with each other.
- When a device has been connected to the printer without using a wireless router and you want to set it up again using the same connection method, disconnect it first. Disable the connection between the device and printer in the Wi-Fi setting screen.

Connection Using a Wired Network

- You cannot use the printer over Wi-Fi and wired connections at the same time.
- When using a router, connect the printer and computer to the LAN side (same network segment).

Network Connection Tips (Windows/macOS)

- Detect Same Printer Name
- Switching Printer's Connection to Network or Devices

Detect Same Printer Name

When the printer is detected during setup, plural printers with the same name may appear on the results screen.

Select a printer with checking the printer settings against those on detection result screen.

- **For Windows:**

  Check the printer's MAC address or serial to select the correct printer from the results.

- **For macOS:**

  The printer names appear with the MAC address added at the end or as the printer name specified by Bonjour.

  Check identifiers such as the MAC address, the printer name specified by Bonjour, and the printer's serial number to select the printer from among those that appear.

Note

- Serial number may not appear on result screen.

To check the printer's MAC address and the serial number, print out the network settings information.

➡ Printing Network Settings

Note

- You can check the serial number by displaying on the operation panel.

  ➡ System information

Switching Printer's Connection to Network or Devices

Check the following items when connecting a newly added computer to the LAN environment to the printer, changing the connection method from USB to LAN, or changing the wireless LAN (Wi-Fi) connection method.

1. Connects to Another Computer via LAN/Changes from USB to LAN Connection

2. Switching LAN Connection Method

3. Reconfiguration Method of Wi-Fi Connection

1. Connects to Another Computer via LAN/ Changes from USB to LAN Connection

To connect an additional computer to the printer via LAN, or to change from USB to LAN connection, refer to Setup Guide to setup.

2. Switching LAN Connection Method

If you want to switch the connection method (Wired LAN or Wi-Fi) when the printer is used with a LAN connection, check the following item.

For Windows:

- Refer to Setup Guide to setup.
- Enable Wi-Fi or Wired LAN on the printer's operation panel, and then configure the settings in the **Network Settings** screen of Wi-Fi Connection Assistant.

  For details on the configuration, see the following.

  ➡ Performing/Changing Wi-Fi Settings
  ➡ Performing/Changing Wired LAN Connection (Ethernet Cable) Settings

For macOS:

Refer to Setup Guide to setup.

3. Reconfiguration Method of Wi-Fi Connection

- **If you want to switch to Wireless Direct when using the printer with Wi-Fi connection:**

  Wireless Direct connection is available. Wireless Direct and Wi-Fi connection can be used together. But if you use IEEE802.1X/EAP (WPA/WPA2/WPA3 Enterprise), they can be not used together.

  ➡ Connecting with Wireless Direct

- **Switching to a Wi-Fi connection when using the printer Wireless Direct:**

  If you connect the printer to your computer or smartphone via a wireless router for the first time to print, or if you want to change the connection frequency between the printer and the wireless router, perform the setup.

  For Windows:

  Refer to Changing the Connection Mode.

  For macOS:

  Refer to Setup Guide and redo setup.

Wi-Fi Connection Assistant (Windows)

- Wi-Fi Connection Assistant
- Starting Up Wi-Fi Connection Assistant
- Diagnosing and Repairing Network Settings
- Performing/Changing Network Settings
- List of Models Which Does Not Support Diagnosis and Repair Function
- List of Models Which Does Not Support IPv6 Configuration via USB Connection

Important

- Some functions may not be available depending on your model and software version.

Wi-Fi Connection Assistant

Wi-Fi Connection Assistant allows you to diagnose or repair the network status, and to perform printer settings on network.

Use Wi-Fi Connection Assistant for:

- Searching printers on network and performing initial network setup for detected printers
- Performing initial network setup by connecting the printer and computer using a USB cable (Not available for some models)
- Changing printer network settings
- Diagnosing the settings of the printer and those of computer on which Wi-Fi Connection Assistant is installed if anything is wrong with connection. In addition, Wi-Fi Connection Assistant repairs the status of the printer and computer (Not available for some models).

Important

- Depending on the printer you are using, an administrator password is already specified for the printer at the time of purchase. When you change the network settings, authentication by the administrator password is required.

  For details:

  ➡ Administrator Password

- To use the printer over LAN, make sure you have the equipment necessary for the connection type, such as a wireless router or a LAN cable.
- When you install Wi-Fi Connection Assistant, disable block function of firewall.
- Do not change network settings using Wi-Fi Connection Assistant while printing is in progress.

Starting Up Wi-Fi Connection Assistant

Start up Wi-Fi Connection Assistant as shown below.

In Windows 11, from (**Start** button) on the taskbar, select **All apps** > **Canon Utilities** > **Wi-Fi Connection Assistant**.

Note

- In Windows 10, select **Start** > (**All apps** >) > **Canon Utilities** > **Wi-Fi Connection Assistant**.
- In Windows 7, click **Start** and select **All Programs**, **Canon Utilities**, **Wi-Fi Connection Assistant**, and then **Wi-Fi Connection Assistant**.

When you start up Wi-Fi Connection Assistant, a message appears. Check the message and select **Yes**. The screen below appears.

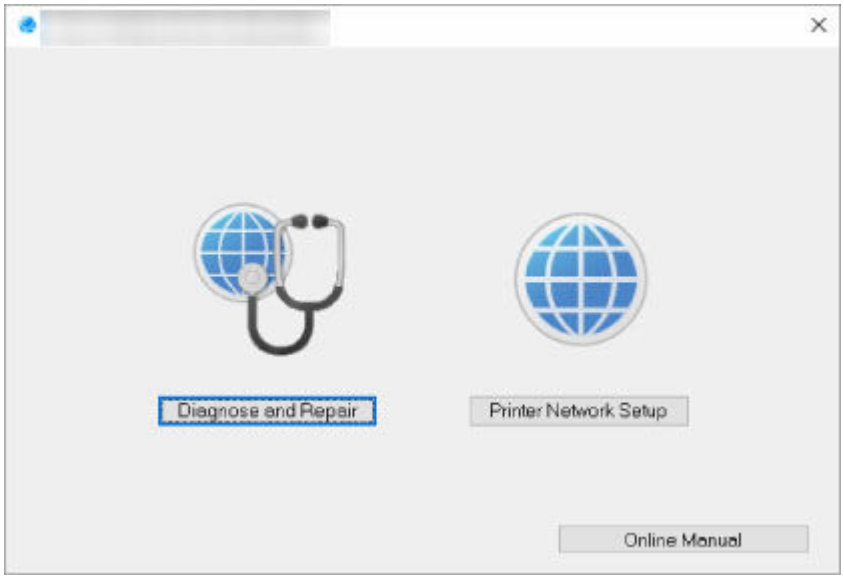

Select **Diagnose and Repair** or **Printer Network Setup** on the displayed screen.

- If you select **Diagnose and Repair**:

  ➡ Diagnosing and Repairing Network Settings

- If you select **Printer Network Setup**:

  ➡ Performing/Changing Network Settings

Diagnosing and Repairing Network Settings

Wi-Fi Connection Assistant diagnoses and repairs computer settings or connection between the computer and printer when a problem (e.g. cannot print from a printer on the network) occurs.

Important

- Some models do not support diagnosis and repair function.

  For details:

  ➡ List of Models Which Does Not Support Diagnosis and Repair Function

Follow the procedure below.

1. Start up Wi-Fi Connection Assistant.

2. Check the displayed message and select **Yes**.

3. Select **Diagnose and Repair** on the displayed screen.

   Perform operations following the instructions on the screen.

   Note

   - This function checks the following items:
     - whether the computer is connected to the router
     - whether a web page on the Internet can be viewed
     - whether the printer can be detected on the network
     - whether the signal strength or communication level is sufficient (when using Wi-Fi)
     - whether the printer port setting matches with the network setting

Performing/Changing Network Settings

- Canon Wi-Fi Connection Assistant Screen
- Performing Network Settings

Canon Wi-Fi Connection Assistant Screen

- Items on Canon Wi-Fi Connection Assistant Screen
- Menus on Canon Wi-Fi Connection Assistant Screen
- Items on Canon Wi-Fi Connection Assistant Screen Toolbar

Items on Canon Wi-Fi Connection Assistant Screen

The screen below appears when you start up Wi-Fi Connection Assistant and select **Printer Network Setup**. Detected printers are listed on the screen and the items below are shown.

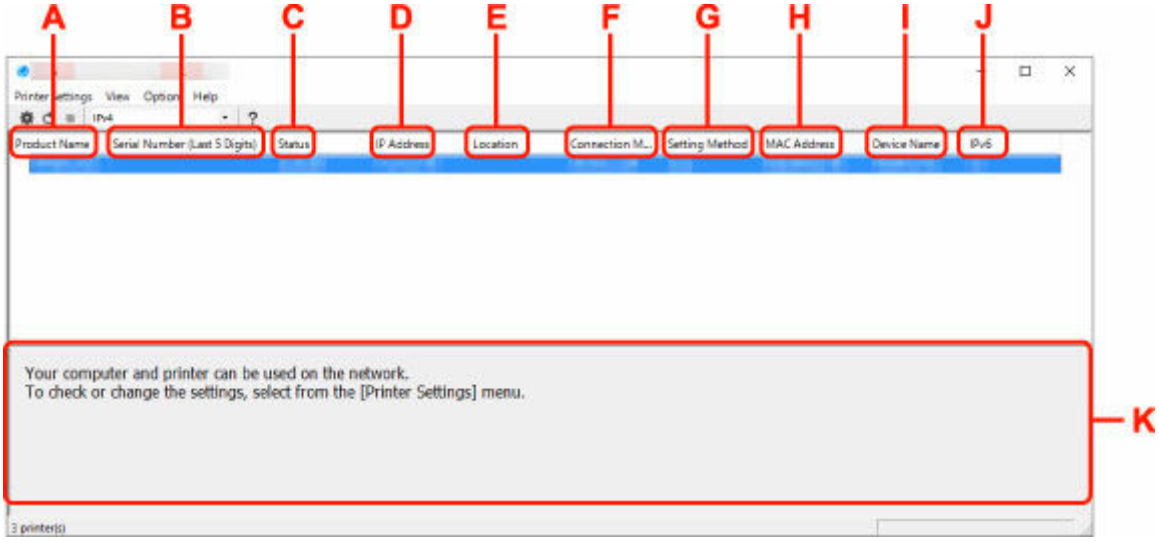

A: Product Name

Displays the product name of detected printer. The icon below appears on the left if the printer cannot be used.

: Appears when the printer requires setup or has not been configured.

: Appears when the IP address is duplicated to another printer.

: Appears when you cannot communicate with the printer.

Note

- If a printer you want to use is not detected, try to set the criteria for printer search.
  - Setting Criteria for Printer Search/Searching Specific Printer
- Right-clicking a printer displays setting items or items to confirm.

B: Serial Number (Last 5 Digits)

Displays the last five digits of printer's serial number.

C: Status

Displays the printer status as shown below.

- **Available**

  Indicates the printer is available.

- **Setup Completed**

Appears after performing network setup and clicking **Set** to close the window.

- **Requires Setup**

  Indicates the printer is required to perform Wi-Fi setup.

  ➡ Performing/Changing Wi-Fi Settings

- **Not Set**

  Indicates the printer cannot be used on network, or IPv6 is disabled. Specify an IP address or enable IPv6 on **Network Settings...**.

  ➡ Performing/Changing Wi-Fi Settings

- **IP Address Overlap**

  Indicates the IP address is duplicated to another printer.

- **Unknown**

  Indicates the printer recognized as **Available** in the past cannot be used currently.

  Note

  - If **USB** is selected from the pulldown menu on the toolbar, nothing is displayed.

D: IP Address

Displays the printer IP address. Nothing is displayed if the printer status is **Requires Setup**.

Note

- If **USB** is selected from the pulldown menu on the toolbar, "-" is displayed.

E: Location

Displays the printer location if it is registered. Nothing is displayed if the printer status is **Requires Setup**.

Note

- If **USB** is selected from the pulldown menu on the toolbar, nothing is displayed.

➡ Assigning Printer Information

F: Connection Method

Displays printer connection method (wired LAN, Wi-Fi, or USB).

Note

- If **USB** is selected from the pulldown menu on the toolbar, **USB** is displayed.
- If the printer supports both of the LAN connection methods, the printer is recognized as two printers and they are displayed separately. (The same numbers are displayed on **Serial Number (Last 5 Digits)**.)
- If the printer does not support wired LAN, wired LAN is not displayed.
- If you are using Wi-Fi Connection Assistant on the computer which does not support Wi-Fi, Wi-Fi is not displayed.

G: Setting Method

Displays printer setting method.

- **Auto**

Appears if the printer is used by IP address specified automatically.

- **Manual**

  Appears if the printer is used by IP address specified manually.

Note

- If **USB** is selected from the pulldown menu on the toolbar, "-" is displayed.

H: MAC Address

Displays the MAC address of the detected printer.

Note

- If **USB** is selected from the pulldown menu on the toolbar, "-" is displayed.

I: Device Name

Displays the printer device name if it is registered.

Note

- If **USB** is selected from the pulldown menu on the toolbar, nothing is displayed.
- The printer with **Requires Setup** displayed on **Status** is not displayed.

➡ Assigning Printer Information

J: IPv6

On appears when an IPv6 address is assigned for the printer.

Note

- If **USB** is selected from the pulldown menu on the toolbar, "-" is displayed.

K: Displays the printer status and operation guides.

Selecting a printer from the printer list displays its current status and what to do next.

Menus on Canon Wi-Fi Connection Assistant Screen

This section describes menus on **Canon Wi-Fi Connection Assistant** screen.

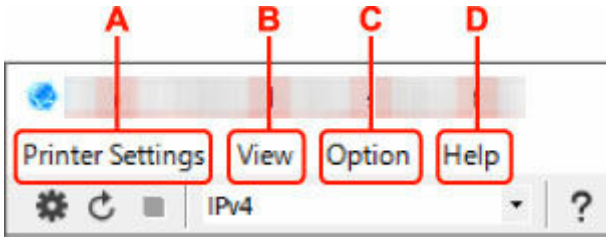

A: Printer Settings menu

➡ Printer Settings Menu

B: View menu

➡ View Menu

C: Option menu

➡ Option Menu

D: Help menu

➡ Help Menu

Items on Canon Wi-Fi Connection Assistant Screen Toolbar

This section describes items on **Canon Wi-Fi Connection Assistant** Screen toolbar.

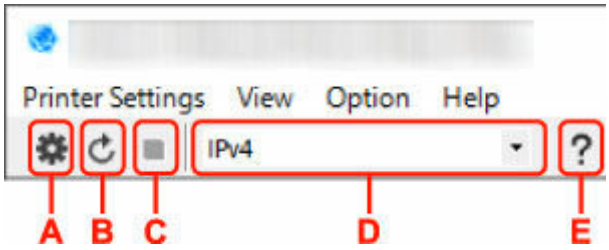

A: Perform wired or Wi-Fi setup.

Note

- This item has the same function as **Network Settings...** in the **Printer Settings** menu.

B: Redetects printers.

Note

- This item has the same function as **Update** in the **View** menu.

C: Stops detecting printers.

Note

- This item has the same function as **Cancel** in the **View** menu.

D: Switches the printer list. (IPv4, IPv6, or USB printers)

Note

- This item has the same function as **Switch View** in the **View** menu.
- You can also display the USB connected printer list. (Not available for some models.) In this case, select **USB**.

E: Displays this guide.

Note

- This item has the same function as **Online Manual** in the **Help** menu.

Performing Network Settings

- Performing/Changing Wired LAN Connection (Ethernet Cable) Settings （Supported models only）
- Performing/Changing Wi-Fi Settings
- Assigning Printer Information

Important

- Some functions may not be available depending on your model and software version.

Performing/Changing Wired LAN Connection (Ethernet Cable) Settings（Supported models only）

Follow the procedure below to perform/change wired LAN settings.

Important

- These settings are not available if your printer does not have a wired LAN connection.

Note

- For some models, you can perform network setup for a USB connected printer using Wi-Fi Connection Assistant. Select **USB** on **Switch View** under the **View** menu to display printers for which you can perform setup.

1. Start up Wi-Fi Connection Assistant.

2. Check the displayed message and select **Yes**.

3. Select **Printer Network Setup** on the displayed screen.

   Detected printers are listed.

4. Select printer to perform/change settings from printer list.

   Select the printer with **Wired LAN** displayed on **Connection Method** and **Available** displayed on **Status** to perform settings.

   You can perform settings for a printer with **Available** not displayed on **Status** via USB connection.

   To perform setup for a USB connected printer, select **USB** from the pulldown menu on the toolbar and select the printer to perform/change settings.

5. Select **Network Settings...** on **Printer Settings** menu.

   The **Confirm Printer Password** screen appears.

   For more on the password, refer to Administrator Password.

   ### Note

   - Clicking the ⚙ icon allows you to perform/change settings.
   - If you select a USB connected printer on step 4, the screen below appears after the **Confirm Printer Password** screen appears

   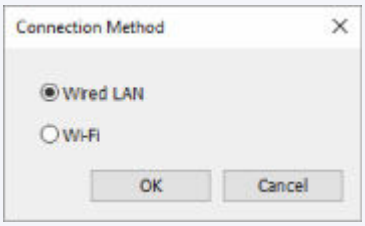

   Select **Wired LAN** and click **OK**.

6. Enter password and click **OK**.

The **Network Settings** screen appears.

7. Perform/change settings.

You can switch the screen between IPv4 and IPv6. Click the tab to switch the protocol.

- IPv4 settings

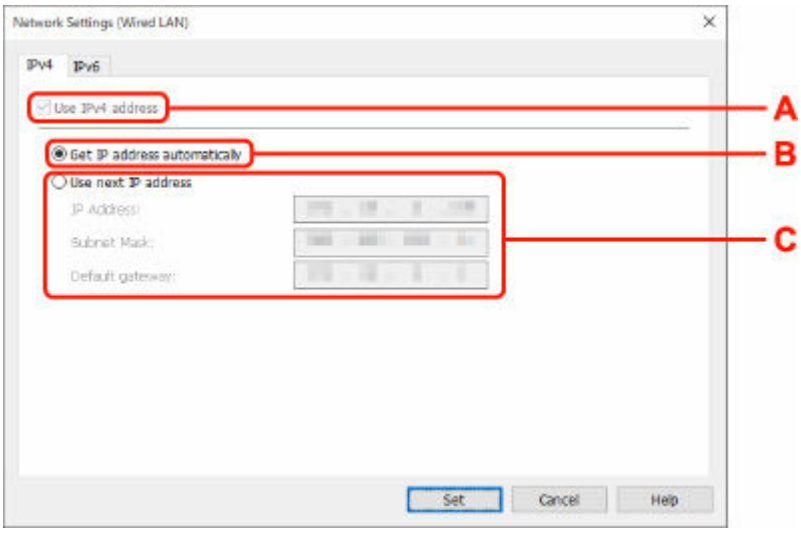

A: Use IPv4 address

Always selected. (displayed in a gray out state)

B: Get IP address automatically

Select this option to use an IP address automatically assigned by a DHCP server. DHCP server functionality must be enabled on your router.

C: Use next IP address

Select this option if no DHCP server functionality is available in your setup where you use the printer, or you want to use a fixed IP address.

Enter the IP address, subnet mask, and default gateway.

- IPv6 settings

Note

- If you select a USB connected printer on step 4, you cannot perform IPv6 settings depending on the printer you are using.

  For details, see List of Models Which Does Not Support IPv6 Configuration via USB Connection.

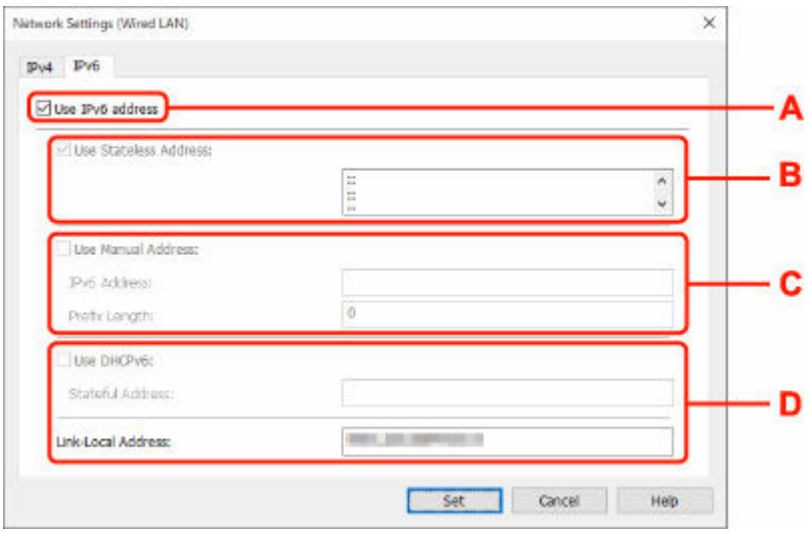

A: Use IPv6 address

Select when you use the printer with IPv6 environment.

B: Use Stateless Address:

Select when you use an IP address assigned automatically. Use a router compatible with IPv6.

Note

- This setting item is not available depending on the printer you are using.

C: Use Manual Address:

Select this option if no DHCP server functionality is available in your setup where you use the printer, or you want to use a fixed IP address.

Enter the IP address and IP address prefix length.

Note

- This setting item is not available depending on the printer you are using.

D: Use DHCPv6:

Select when you obtain an IP address using DHCPv6.

Note

- This setting item is not available depending on the printer you are using.

8. Click **Set**.

Performing/Changing Wi-Fi Settings

Follow the procedure below to perform/change Wi-Fi settings.

Important

- Enable Easy wireless connect (Cableless setup) before performing printer setup. (Not required if you change the IP address.) For details, search for "NR049" on your printer's online manual and see the page shown.
- If you plan to use a printer over Wi-Fi, make sure you perform security settings for the Wi-Fi network.

Note

- For some models, you can perform network setup for a USB connected printer using Wi-Fi Connection Assistant. Select **USB** on **Switch View** under the **View** menu to display printers.

1. Start up Wi-Fi Connection Assistant.

2. Check the displayed message and select **Yes**.

3. Select **Printer Network Setup** on the displayed screen.

   Detected printers are listed.

4. Select printer to perform/change settings from printer list.

   Select the printer with **Wi-Fi** displayed on **Connection Method** and **Available** or **Requires Setup** displayed on **Status** to perform settings.

   You can perform settings for a printer with **Available** or **Requires Setup** not displayed on **Status** via USB connection.

   To perform setup for a USB connected printer, select **USB** from the pulldown menu on the toolbar and select the printer to perform/change settings.

5. Select **Network Settings...** on **Printer Settings** menu.

   The **Confirm Printer Password** screen appears.

   For more on the password, refer to Administrator Password.

   ### Note

   - Clicking the ⚙ icon allows you to perform/change settings.
   - If you select a USB connected printer on step 4 and the selected printer is compatible with wired LAN, the screen below appears after the **Confirm Printer Password** screen appears

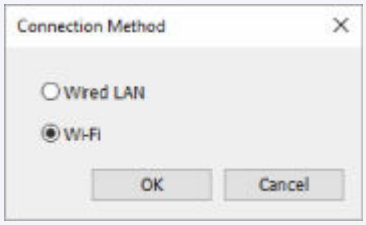

Select **Wi-Fi** and click **OK**.

6. Enter password and click **OK**.

The **Network Settings** screen appears.

7. Perform/change settings.

You can switch the screen between IPv4 and IPv6. Click the tab to switch the protocol.

- IPv4/IPv6 settings

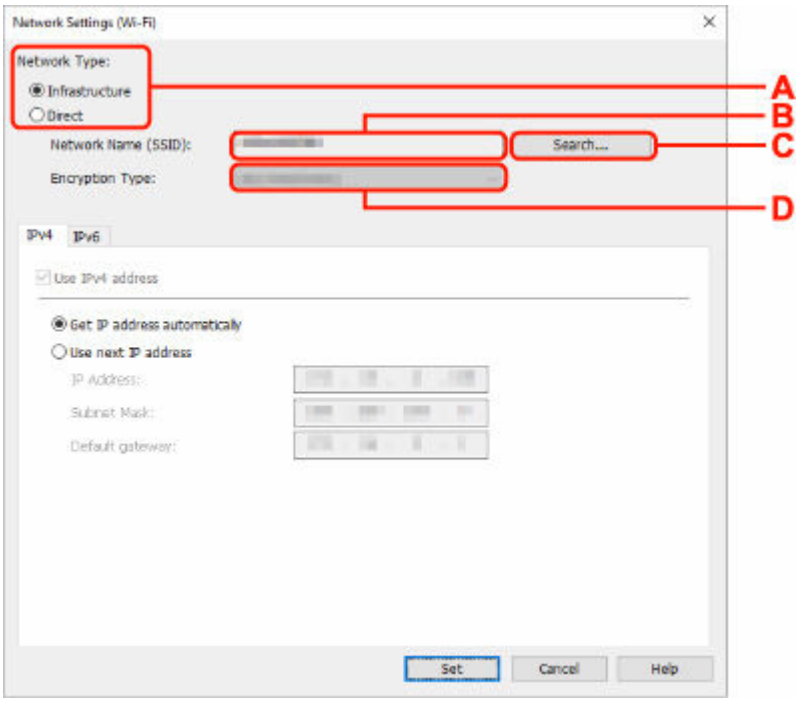

A: Network Type:

Select the Wi-Fi mode.

- **Infrastructure**

  Connects the printer to the Wi-Fi with a wireless router.

- **Direct**

  Connects the printer to wireless communication devices (smartphone or tablet) without a wireless router.

Note

- If Wi-Fi is enabled on the computer and if you select a USB connected printer on step 4, you can select **Direct** depending on the printer you are using.
- If **Direct** is selected, all items are displayed in a gray out status and you cannot perform any settings.

  In addition, you cannot connect to Internet from your computer depending on your operating environment.

B: Network Name (SSID):

The network name (SSID) of the Wi-Fi currently used is displayed.

The network name (SSID) for Wireless Direct appears while in Wireless Direct.

C: Search...

The **Detected Wireless Routers** screen is displayed to select a wireless router to connect to. For a wireless router already connected to the computer, **Available** is displayed on **Communication Status**.

If you select a wireless router with **Not Connected** on **Communication Status** from the list, clicking **Set** displays the WPA/WPA2 or WEP setting screen for a wireless router.

➡ If WEP Details Screen Appears
➡ If WPA/WPA2 Details Screen Appears

D: Encryption Type:

Displays the encryption method used over the Wi-Fi.

- IPv4 settings

Note

- The setting items below are available only when **Infrastructure** is selected for **Network Type:**.

  If **Direct** is selected, all items are displayed in a gray out status and you cannot perform any settings.

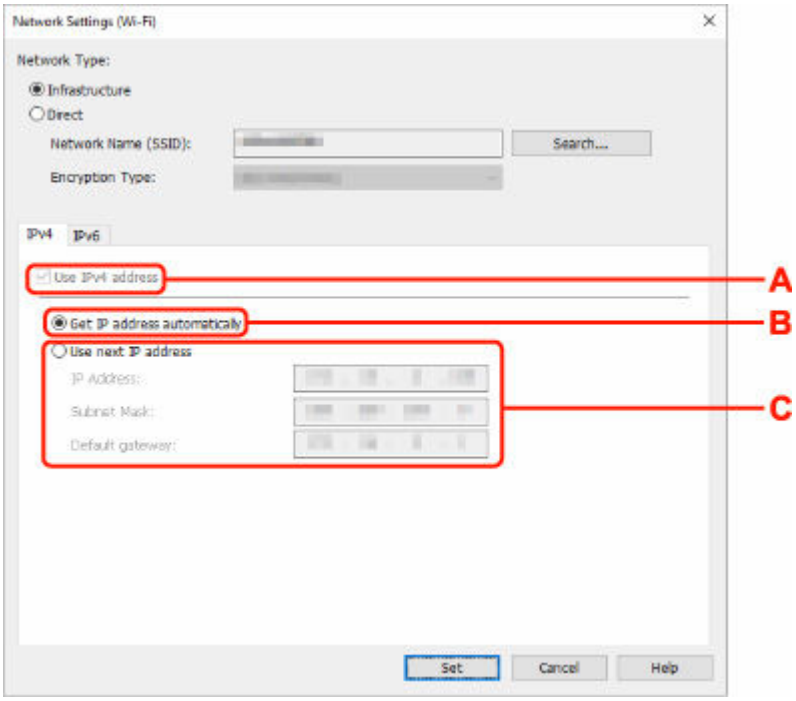

A: Use IPv4 address

Always selected. (displayed in a gray out state)

B: Get IP address automatically

Select this option to use an IP address automatically assigned by a DHCP server. DHCP server functionality must be enabled on your wireless router.

C: Use next IP address

Select this option if no DHCP server functionality is available in your setup where you use the printer, or you want to use a fixed IP address.

Enter the IP address, subnet mask, and default gateway.

- IPv6 settings

Note

- If you select a USB connected printer on step 4, you cannot perform IPv6 settings depending on the printer you are using.

  For details, see List of Models Which Does Not Support IPv6 Configuration via USB Connection.

- The setting items below are available only when **Infrastructure** is selected for **Network Type:**.

  If **Direct** is selected, all items are displayed in a gray out status and you cannot perform any settings.

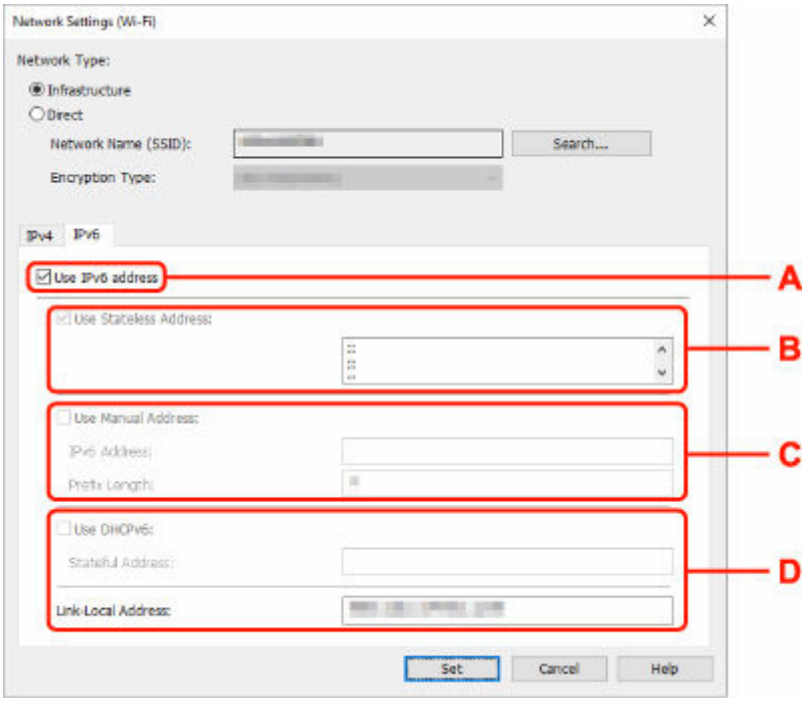

A: Use IPv6 address

Select when you use the printer with IPv6 environment.

B: Use Stateless Address:

Select when you use an IP address assigned automatically. Use a router compatible with IPv6.

Note

- This setting item is not available depending on the printer you are using.

C: Use Manual Address:

Select this option if no DHCP server functionality is available in your setup where you use the printer, or you want to use a fixed IP address.

Enter the IP address and IP address prefix length.

Note

- This setting item is not available depending on the printer you are using.

D: Use DHCPv6:

Select when you obtain an IP address using DHCPv6.

Note

- This setting item is not available depending on the printer you are using.

8. Click **Set**.

Assigning Printer Information

Follow the procedure below to assign/change printer location name or device name.

The names appear on **Device Name:** and **Location:** on the **Canon Wi-Fi Connection Assistant** screen.

Note

- If **USB** is selected from the pulldown menu on the toolbar, this setting item is not available.

1. Start up Wi-Fi Connection Assistant.

2. Check the displayed message and select **Yes**.

3. Select **Printer Network Setup** on the displayed screen.

   Detected printers are listed.

4. Select printer to assign location name and device name.

   Select the printer with **Available** displayed on **Status**.

5. Select **Detailed Printer Settings...** on **Printer Settings** menu.

   The **Confirm Printer Password** screen appears.

   For more on the password, refer to Administrator Password.

6. Enter password and click **OK**.

   The **Detailed Printer Settings** screen appears.

7. Perform/change settings.

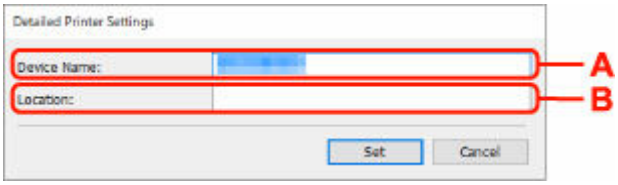

   The setting items below are available.

   A: Device Name:
   Assigns the device name.

   B: Location:
   Assigns the location name.

8. Click **Set**.

List of Models Which Does Not Support Diagnosis and Repair Function

The following models does not support "Diagnose and Repair" function of Wi-Fi Connection Assistant.

- G4000 series
- PRO-500 series
- PRO-1000 series
- MB2100 series
- MB2700 series
- MB5100 series
- MB5400 series
- iB4100 series
- PRO-520
- PRO-540
- PRO-540S
- PRO-560
- PRO-560S
- PRO-2000
- PRO-4000
- PRO-4000S
- PRO-6000
- PRO-6000S
- TS9000 series
- TS8000 series
- TS6000 series
- TS5000 series
- MG3000 series
- E470 series

List of Models Which Does Not Support IPv6 Configuration via USB Connection

For the following models, you can perform settings only for IPv4 using Wi-Fi Connection Assistant. (You cannot perform settings for IPv6.)

- iB4100 series
- MG3000 series
- E470 series
- G4000 series
- TS5000 series
- TS6000 series
- TS8000 series
- TS9000 series
- TR8500 series
- TR7500 series
- TS9100 series
- TS8100 series
- TS6100 series
- TS5100 series
- TS3100 series
- E3100 series
- TS300 series
- E300 series
- TR8580 series
- TS9180 series
- TS8180 series
- TS6180 series
- TR8530 series
- TR7530 series
- TS8130 series
- TS6130 series
- XK70 series
- XK50 series
- G4010 series
- G3010 series
- TR4500 series
- E4200 series
- TS6200 series
- TS6280 series
- TS6230 series
- TS8200 series
- XK80 series
- TS8280 series
- TS8230 series
- TS9500 series
- TS9580 series

- TR9530 series
- TS3300 series
- E3300 series

Wi-Fi Connection Assistant (macOS)

- Wi-Fi Connection Assistant
- Starting Up Wi-Fi Connection Assistant
- Diagnosing and Repairing Network Settings
- List of Models Which Does Not Support Diagnosis and Repair Function

Important

- Some functions may not be available depending on your model and software version.

Wi-Fi Connection Assistant

If anything is wrong with connection, Wi-Fi Connection Assistant diagnoses the settings of the printer and those of computer on which it is installed. In addition, Wi-Fi Connection Assistant restores the status of the printer and computer.

Important

- To use the printer over LAN, make sure you have the equipment necessary for the connection type, such as a wireless router or a LAN cable.
- When you install Wi-Fi Connection Assistant, disable block function of firewall.

Starting Up Wi-Fi Connection Assistant

Start up **Launchpad**, select **Canon Utilities**, and then select Wi-Fi Connection Assistant.

When you start up Wi-Fi Connection Assistant, the screen below appears.

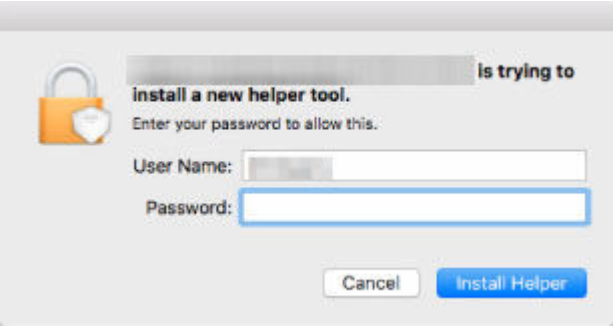

Enter the password specified for your computer and select **Install Helper**. Wi-Fi Connection Assistant starts diagnosis and repair of network.

➡ Diagnosing and Repairing Network Settings

Diagnosing and Repairing Network Settings

Wi-Fi Connection Assistant diagnoses and repairs computer settings or connection between the computer and printer when a problem (e.g. cannot print from a printer on the network) occurs.

Important

- Some models do not support diagnosis and repair function.

  For details:

  ➡ List of Models Which Does Not Support Diagnosis and Repair Function

Wi-Fi Connection Assistant starts checking the computer settings when it starts up. Perform operations following the instructions on the screen.

Note

- This function checks the following items:
  - whether the computer is connected to the router
  - whether the printer can be detected on the network
  - whether the signal strength or communication level is sufficient (when using Wi-Fi)
  - whether the printer port setting matches with the network setting

List of Models Which Does Not Support Diagnosis and Repair Function

The following models does not support "Diagnose and Repair" function of Wi-Fi Connection Assistant.

- G4000 series
- PRO-500 series
- PRO-1000 series
- MB2100 series
- MB2700 series
- MB5100 series
- MB5400 series
- iB4000 series
- PRO-520
- PRO-540
- PRO-560
- PRO-540S
- PRO-560S
- PRO-2000
- PRO-4000
- PRO-6000
- PRO-4000S
- PRO-6000S
- TS9000 series
- TS8000 series
- TS6000 series
- TS5000 series
- MG3000 series
- E470 series

Performing Maintenance Functions from the Printer

- Maintenance Procedure
- Printing the Nozzle Check Pattern
- Examining the Nozzle Check Pattern
- Cleaning the Print Head
- Deep Print Head Cleaning
- Aligning the Print Head
- Aligning the Print Head Manually

Maintenance Procedure

If print results are blurred, colors are not printed correctly, or print results are unsatisfactory (e.g. misaligned printed ruled lines), perform the maintenance procedure below.

Important

- Do not rinse or wipe the print head. This can cause trouble with the print head.

Note

- Check if ink remains in the ink tanks.
  - ➡ Checking Ink Level
- For Windows, increasing the print quality in the printer driver settings may improve the print result.
  - ➡ Set Media Type, Quality, etc. (Media/Quality Tab)

When the Print Results Are Blurred or Uneven:

Step 1 Print the nozzle check pattern.

From the printer

➡ Printing the Nozzle Check Pattern

From the computer

➡ Printing a Nozzle Check Pattern

Step 2 Examine the nozzle check pattern.

If there are missing lines or horizontal streaks in the pattern:

Step 3 Clean the print head.

From the printer

➡ Cleaning the Print Head

From the computer

➡ Cleaning the Print Heads

After cleaning the print head, print and examine the nozzle check pattern: ➡ Step 1

If the problem is not resolved after performing from step 1 to step 3 twice:

Step 4 Clean the print head deeply.

From the printer

➡ Deep Print Head Cleaning

From the computer

➡ Cleaning the Print Heads

After deep print head cleaning, print and examine the nozzle check pattern: ➡ Step 1

When you have performed the procedure until step 4 and the problem has not been resolved, turn off the power and clean the print head deeply again after 24 hours. Do not unplug the power cord when turning off the power.

If the problem is still not resolved, replace ink in print head.

Important

- Replace ink in print head consumes a great amount of ink. Frequent replace ink in print head can rapidly consume ink, so replace ink in print head only when necessary.
- Be sure to check the remaining ink level before replacing ink in print head.

➡ Perform Replace Ink in Print Head

If the symptom still persists, the print head may be defective. Contact Canon to request a repair.

When the Print Results Are Not Even such as the Ruled Lines Are Misaligned:

Step Align the print head.

From the printer

➡ Aligning the Print Head

From the computer

- For Windows:

  ➡ Adjusting Print Head Position Automatically

- For macOS:

  ➡ Adjusting Print Head Position

Printing the Nozzle Check Pattern

Print the nozzle check pattern to determine whether the ink ejects properly from the print head nozzle.

Note

- If the remaining ink level is low, the nozzle check pattern will not be printed correctly. Refill the ink tanks whose ink is low.

You need to prepare: a sheet of A4 or Letter-sized plain paper

1. Check that printer is turned on.

2. Load a sheet of A4 or Letter-sized plain paper in the cassette.

   ➡ Loading Plain Paper

3. Select (Setup) on HOME screen.

   ➡ Using Touch Screen

   The setup menu screen will appear.

4. Select **Maintenance**.

   The **Maintenance** screen will appear.

5. Select **Nozzle Check**.

   The confirmation screen will appear.

6. Select **Yes**.

   The nozzle check pattern will be printed and two pattern confirmation screens will appear on the touch screen.

7. Examine the nozzle check pattern.

Examining the Nozzle Check Pattern

Examine the nozzle check pattern, and clean the print head if necessary.

1. Check if there are missing lines in the pattern C or horizontal streaks in the pattern D.

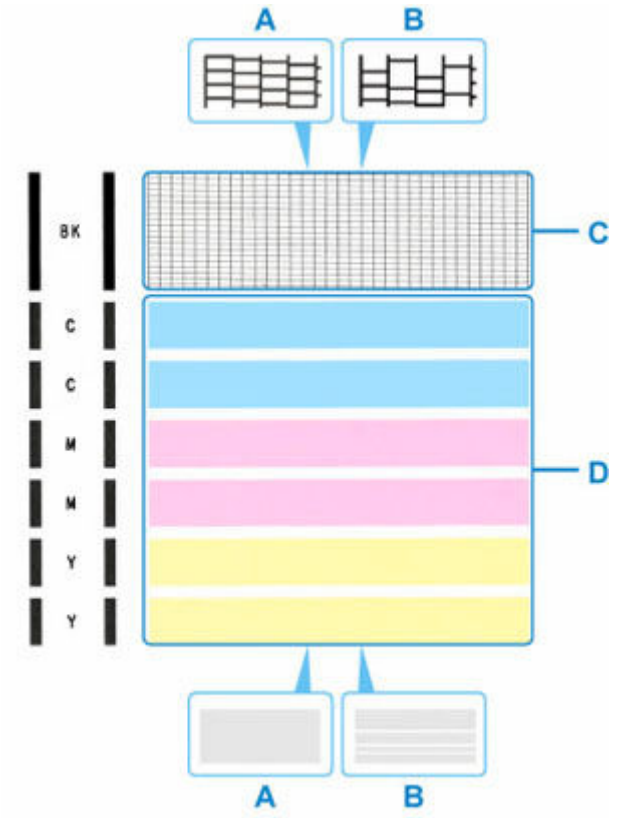

A: No missing lines/No horizontal streaks
B: Lines are missing/Horizontal streaks are present

2. Select the pattern that is closer to the printed nozzle check pattern on the confirmation screen.

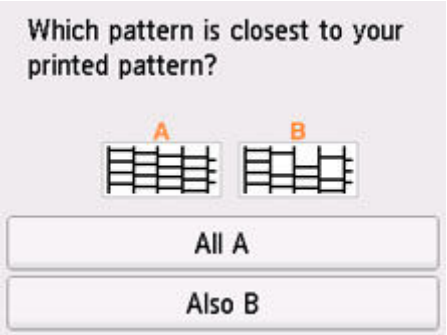

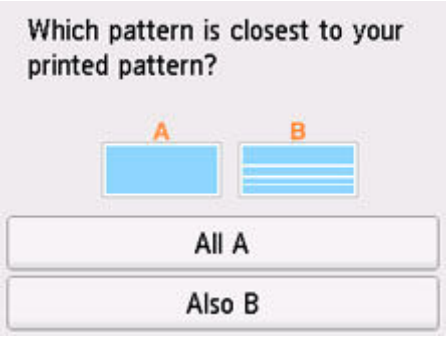

For A (no missing lines or no horizontal streaks) in both the pattern C and pattern D:

The cleaning is not required. Select **All A**, confirm the message, then select **OK**.

The screen will return to the **Maintenance** screen.

For B (lines are missing or horizontal streaks are present) in the pattern C or pattern D, or in both patterns:

The cleaning is required. Select **Also B**, then select **Yes** on the cleaning confirmation screen.

The printer starts cleaning the print head.

➡ Cleaning the Print Head

If the pattern C or any color in the pattern D is not printed:

(Example: Magenta pattern is not printed)

The cleaning is required. Select **Also B**, then select **Yes** on the cleaning confirmation screen.

The printer starts cleaning the print head.

➡ Cleaning the Print Head

Cleaning the Print Head

Clean the print head if lines are missing or if horizontal streaks are present in the printed nozzle check pattern. Cleaning unclogs the nozzles and restores the print head condition. Cleaning the print head consumes ink, so clean the print head only when necessary.

Important

- When performing the print head cleaning, check the free space in the maintenance cartridge. If there is not enough free space, replace with the new maintenance cartridge. In the case of shortage of free space in the maintenance cartridge, a message is displayed and the cleaning cannot be performed.

You need to prepare: a sheet of A4 or Letter-sized plain paper

1. Check that printer is turned on.

2. Load a sheet of A4 or Letter-sized plain paper in the cassette.

   ➡ Loading Plain Paper

3. Select (Setup) on HOME screen.

   ➡ Using Touch Screen

   The setup menu screen will appear.

4. Select **Maintenance**.

   The **Maintenance** screen will appear.

5. Select **Cleaning**.

   The confirmation screen will appear.

6. Select **Yes**.

   The printer starts cleaning the print head.

   Do not perform any other operations until the printer completes the cleaning of the print head.

The pattern print confirmation screen will appear.

7. Select **Yes**.

   The nozzle check pattern will be printed.

8. Examine the nozzle check pattern.

Note

- If the problem is not resolved after cleaning the print head twice, clean the print head deeply.

Deep Print Head Cleaning

If print quality does not improve by the standard cleaning of the print head, clean the print head deeply. Cleaning the print head deeply consumes more ink than the standard cleaning of the print head, so clean the print head deeply only when necessary.

Important

- When performing the print head deep cleaning, check the free space in the maintenance cartridge. If there is not enough free space, replace with the new maintenance cartridge. In the case of shortage of free space in the maintenance cartridge, a message is displayed and the cleaning cannot be performed.

You need to prepare: a sheet of A4 or Letter-sized plain paper

1. Check that printer is turned on.

2. Load a sheet of A4 or Letter-sized plain paper in the cassette.

   ➡ Loading Plain Paper

3. Select (Setup) on HOME screen.

   ➡ Using Touch Screen

   The setup menu screen will appear.

4. Select **Maintenance**.

   The **Maintenance** screen will appear.

5. Select **Deep Cleaning**.

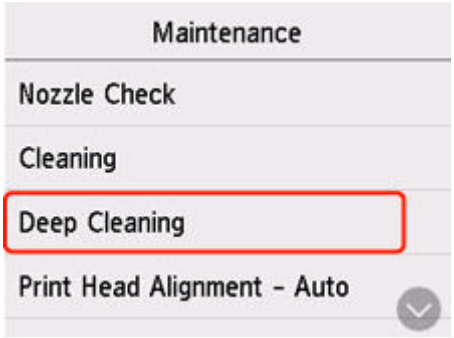

   The confirmation screen will appear.

6. Select **Yes**.

   The printer starts cleaning the print head deeply.

   Do not perform any other operations until the printer completes the deep cleaning of the print head.

The pattern print confirmation screen will appear.

7. Select **Yes**.

   The nozzle check pattern will be printed.

8. When the completion message appears, select **OK**.

9. Examine the nozzle check pattern.

If the problem is not resolved, turn off the power and clean the print head deeply again after 24 hours. Do not unplug the power cord when turning off the power.

Aligning the Print Head

If printed ruled lines are misaligned or print results are otherwise unsatisfactory, adjust the print head position.

Note

- If the remaining ink level is low, the print head alignment sheet will not be printed correctly.

  If the remaining ink level is low, refill ink tanks.
- If ink runs out as the print head alignment sheet is printed, an error message appears on the touch screen.

  ➡ When Error Occurred

You need to prepare: a sheet of A4 or Letter-sized plain paper

1. Check that printer is turned on.

2. Load a sheet of A4 or Letter-sized plain paper in cassette.

   ➡ Loading Plain Paper

3. Select (Setup) on HOME screen.

   ➡ Using Touch Screen

   The setup menu screen will appear.

4. Select **Maintenance**.

   The **Maintenance** screen will appear.

5. Select **Print Head Alignment - Auto**.

   The confirmation screen will appear.

6. Confirm the message, then select **Yes**.

   The print head alignment sheet is printed, and the print head is aligned automatically.

Note

- If automatic print head alignment fails, an error message appears on the touch screen.

  ➡ When Error Occurred

7. When the completion message appears, select **OK**.

Note

- If the print results are still not satisfactory after adjusting the print head position as described above, adjust the print head position manually.
  - For Windows:

    You can also align the print head manually from a computer.

    ➡ Adjusting Print Head Position Manually
- To print and check the current head position adjustment values, select **Print the Head Alignment Value** on the **Maintenance** screen.

Aligning the Print Head Manually

Try aligning the print head manually after automatic print head alignment if printing results are not as expected, as when printed ruled lines are misaligned.

You need to prepare: two sheets of A4 or Letter-sized plain paper

1. Check that printer is turned on.

2. Load two sheets of A4 or Letter-sized plain paper in cassette.

   ➡ Loading Plain Paper

3. Select (Setup) on HOME screen.

   ➡ Using Touch Screen

   The setup menu screen will appear.

4. Select **Maintenance**.

   The **Maintenance** screen will appear.

5. Select **Print Head Alignment - Manual**.

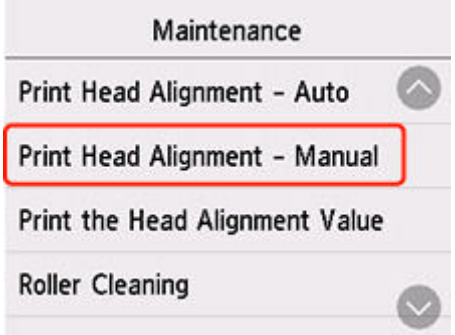

   The confirmation screen will appear.

   Note

   - To print and check the current head position alignment values, select **Print the Head Alignment Value**.

6. Check message and select **Yes**.

   The print head alignment pattern will be printed.

7. When **Did the patterns print correctly?** appears, make sure pattern was printed correctly, and if so, select **Yes**.

8. Check message and select **Next**.

The input screen for head position alignment values is displayed.

9. Examine first patterns and select **A**. In column A, find pattern in which stripes are least noticeable, and then select the number of that pattern.

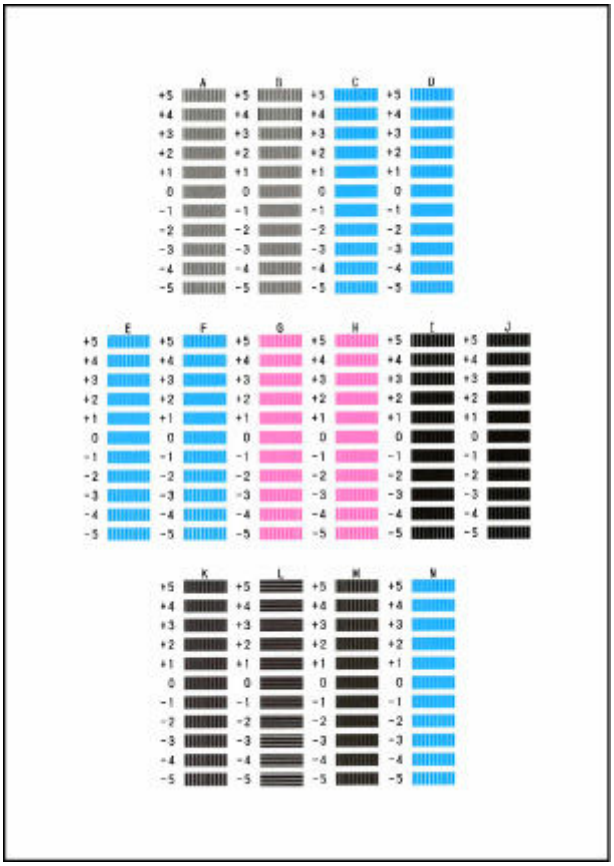

Note

- If all patterns look different, choose the pattern in which vertical stripes are least noticeable.

  Subtle vertical stripes

  Noticeable vertical stripes

- If all patterns look different, choose the pattern in which horizontal stripes are least noticeable.

  Subtle horizontal stripes

  Noticeable horizontal stripes

10. Repeat these steps until you have finished entering pattern numbers for columns B to N, and then select **OK**.

11. Check message and select **OK**.

The second set of patterns is printed.

12. Examine second patterns and select **O**. In column O, find pattern in which stripes are least noticeable, and then select the number of that pattern.

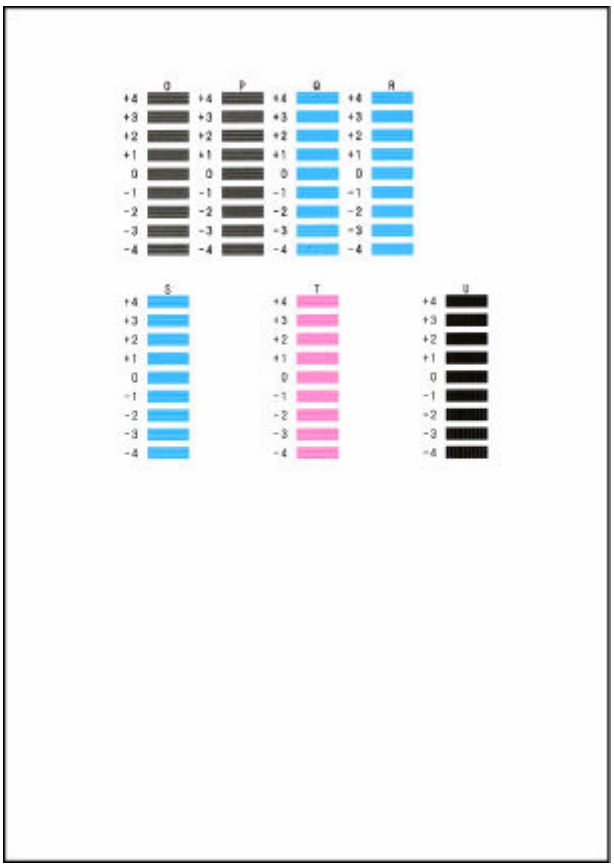

13. Repeat these steps until you have finished entering pattern numbers for columns P to U, and then select **OK**.

14. When confirmation message appears, select **OK**.

Performing Maintenance Functions from Your Computer (macOS)

- Opening Remote UI for Maintenance
- Cleaning the Print Heads
- Adjusting Print Head Position

Opening Remote UI for Maintenance

You can perform maintenance of printer and change the settings from a Remote UI.
The following is the procedure to open a Remote UI.

1. Open **System Settings**, and select **Printers & Scanners**

2. Select your model from the printer list, and click **Options & Supplies...**

3. Click **Show Printer Webpage...** in **General** tab

   Remote UI starts.

   Note

   - The password may have to be entered after Remote UI starts. In such a case, enter the password and click **OK**. In case you do not know the password, see "Passwords and cookies."

Related Topics

- Cleaning the Print Heads
- Adjusting Print Head Position
- Printing a Nozzle Check Pattern
- Managing the Printer Power
- Changing the Printer Operation Mode
- Reducing the Printer Noise

Cleaning the Print Heads

The print head Cleaning and Deep Cleaning functions allow you to clear up clogged print head nozzles. Perform print head Cleaning if printing results are not satisfactory or if a specific color fails to print, even though there is enough ink.
Before performing any operation, confirm that the maintenance cartridge has enough available space.

Cleaning

1. Select **Utilities** from Remote UI

2. Click **Cleaning**

   Before performing Cleaning, check that the printer power is on.
   Check the following. Then, if necessary, perform Cleaning.

   - Is there ink remaining?

3. Perform Cleaning

   Click **Yes**.

   Print head Cleaning starts.

4. Complete Cleaning

   Next, the message for Nozzle Check pattern printing is displayed.

5. Check the results

   To check whether the print quality has improved, click **Yes**. To cancel the check process, click **No**.

   If cleaning the head once does not resolve the print head problem, clean it once more.

Important

- **Cleaning** consumes a small amount of ink.
  Cleaning the print head frequently will rapidly deplete your printer's ink supply. Perform Cleaning only when necessary.

Deep Cleaning

Deep Cleaning is more thorough than Cleaning. Perform Deep Cleaning when two **Cleaning** attempts do not resolve the print head problem.

1. Select **Utilities** from Remote UI

2. Click **Deep Cleaning**

   Before performing Deep Cleaning, check that the printer power is on.
   Check the following. Then, if necessary, perform Deep Cleaning.

- Is there ink remaining?

3. Perform Deep Cleaning

   Click **Yes**.

   Print head Deep Cleaning starts.

4. Complete Deep Cleaning

   Next, the message for Nozzle Check pattern printing is displayed.

5. Check the results

   To check whether the print quality has improved, click **Yes**. To cancel the check process, click **No**.

Important

- **Deep Cleaning** consumes a larger amount of ink than **Cleaning**.
  Cleaning the print head frequently will rapidly deplete your printer's ink supply. Perform Deep Cleaning only when necessary.

Note

- If there is no sign of improvement after **Deep Cleaning**, turn off the printer, wait 24 hours, and then perform **Deep Cleaning** again. If there is still no sign of improvement, the ink may have run out or the print head may be worn. For details on the remedial action to be taken, see "Ink Does Not Come Out/Blurry or Fuzzy/Inaccurate or Bleeding Colors/Streaks."

Related Topic

➡ Printing a Nozzle Check Pattern

Adjusting Print Head Position

Any error in the print head installation position can cause color and line shifts. Adjusting the print head position improves print results.

Print Head Alignment - Auto

1. Select **Utilities** from Remote UI

2. Click **Print Head Alignment - Auto**

   A message appears.

3. Load paper in printer

   Load one sheet of A4 size or Letter size plain paper into the cassette.

4. Run head position adjustment

   Check that the printer power is on, and then click **Yes**.
   Head alignment starts. Proceed with the operations in accordance with the messages on the screen.

   Important

   - Do not open the scanning unit / cover while printing is in progress; otherwise, printing will stop.

Note

- You can print and check the current settings by clicking on **Print the head alignment value**.

Cleaning

- Cleaning Exterior Surfaces
- Cleaning Platen and Document Cover
- Cleaning the ADF (Auto Document Feeder)
- Cleaning Paper Feed Rollers
- Cleaning Inside the Printer (Bottom Plate Cleaning)
- Cleaning Cassette Pads

Cleaning Paper Feed Rollers

If a paper feed roller is dirty or paper powder is attached to it, paper may not be fed properly. In this case, perform Roller Cleaning. Cleaning will cause wear on rollers, so perform this only when necessary.

You need to prepare: three sheets of A4 or Letter-sized plain paper

1. Check that printer is turned on.

2. Select (Setup) on HOME screen.

   ➡ Using Touch Screen

   The setup menu screen will appear.

3. Select **Maintenance**.

   The **Maintenance** screen will appear.

4. Select **Roller Cleaning**.

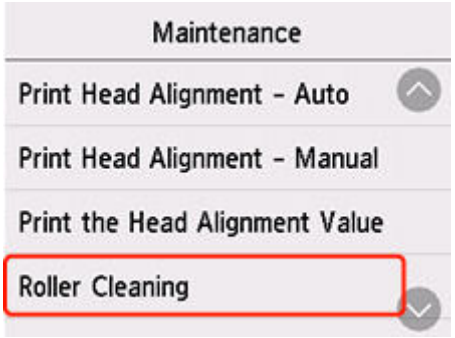

   The confirmation screen will appear.

5. Select **Yes**.

6. Remove any paper from the cassette, then push it back.

7. Select **OK**.

   The paper feed rollers will rotate as they are cleaned without paper.

8. Make sure that the paper feed roller has stopped rotating, then follow the message to load the three sheets of A4 or Letter-sized plain paper in cassette.

   ➡ Loading Plain Paper

9. Select **OK**.

   The printer starts cleaning. The cleaning will be complete when the paper is ejected.

10. When the completion message appears, select **OK**.

If the problem is not resolved after cleaning, contact Canon to request a repair.

Cleaning Inside the Printer (Bottom Plate Cleaning)

Remove stains from the inside of the printer. If the inside of the printer becomes dirty, printed paper may get dirty, so we recommend performing cleaning regularly.

You need to prepare: a sheet of A4 or Letter-sized plain paper*

* Be sure to use a new piece of paper.

1. Check that printer is turned on.

2. Select (Setup) on HOME screen.

   ➡ Using Touch Screen

   The setup menu screen will appear.

3. Select **Maintenance**.

   The **Maintenance** screen will appear.

4. Select **Bottom Plate Cleaning**.

   The confirmation screen will appear.

5. Select **Yes**.

6. Follow the message to remove any paper from the cassette, then select **OK**.

7. Fold a single sheet of A4 or Letter-sized plain paper in half widthwise, then unfold the paper.

8. Fold one side of the opened paper in another half, aligning the edge with the center crease, unfold the paper, then select **OK**.

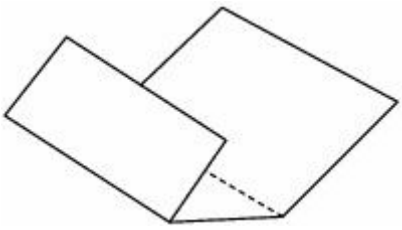

9. Load only this sheet of paper in the cassette with the ridges of the creases facing up and the edge of the half with no crease facing to the far side.

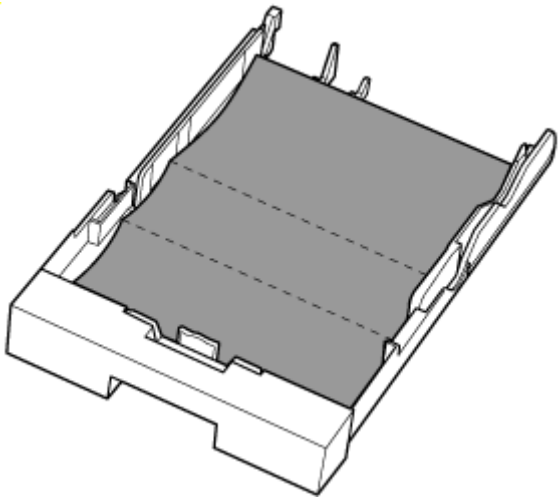

10. Insert cassette into printer.

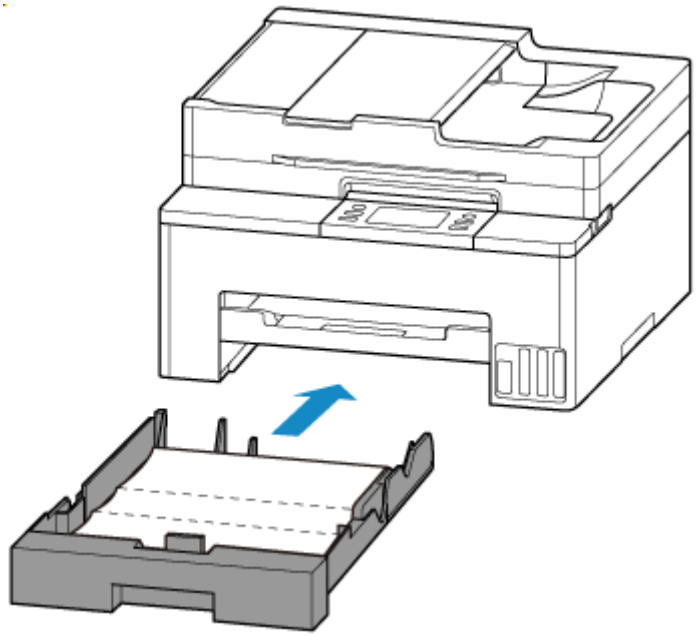

11. Select **OK**.

The paper cleans the inside of the printer as it feeds through the printer.

Check the folded parts of the ejected paper. If they are smudged with ink, perform Bottom Plate Cleaning again.

12. When the completion message appears, select **OK**.

Note

- When performing Bottom Plate Cleaning again, be sure to use a new piece of paper.

If the problem is not resolved after performing cleaning again, the protrusions inside the printer may be stained. Wipe off any ink from the protrusions using a cotton swab or the like.

Important

- Be sure to turn off the power and unplug the power cord before cleaning the printer.
  - The power cannot be turned off while the printer is sending or receiving a fax, or when unsent faxes are stored in the printer's memory. Make sure the printer has finished sending or receiving faxes before turning it off.
  - Remember that faxes cannot be sent or received while the printer is off.

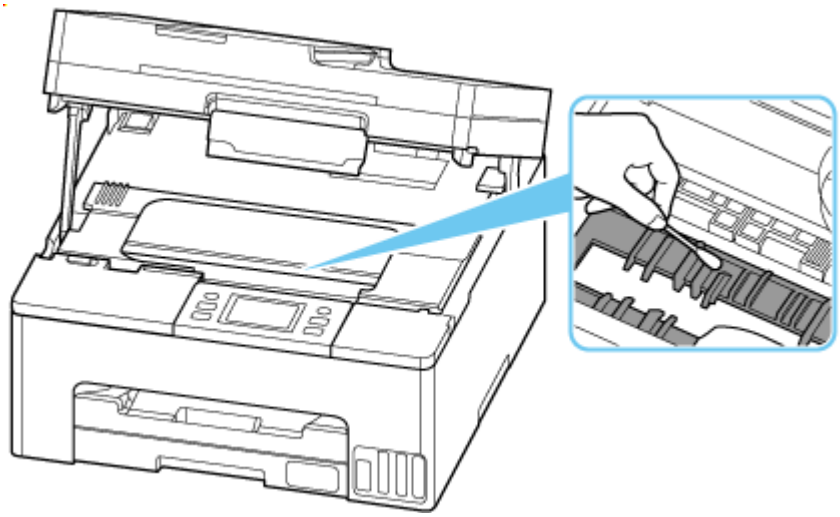

Replacing the Maintenance Cartridge

- Replacing the Maintenance Cartridge
- Checking Maintenance Cartridge Status on Touch Screen

Replacing the Maintenance Cartridge

In case of cautions or errors concerning the maintenance cartridge, an error message will appear on the touch screen to inform you of the error. Take appropriate action as prompted by the message.

➡ When Error Occurred

Important

- If a message is displayed indicating that the maintenance cartridge is nearly full, replace the maintenance cartridge as soon as possible. If the maintenance cartridge becomes full, an error message is displayed and the printer stops working until the cartridge is replaced with a new one.
- Do not touch the terminal (A) of the maintenance cartridge.

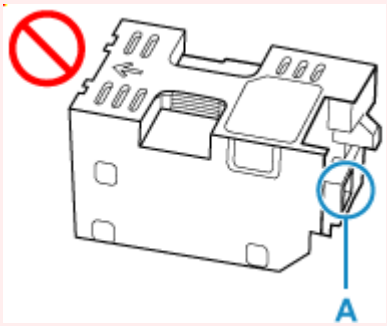

- Do not turn off the printer during replacement of the maintenance cartridge.

Note

- Use a maintenance cartridge with the model number below.

  Maintenance Cartridge MC-G05

1. Prepare a new maintenance cartridge.

   Remove the maintenance cartridge and the attached plastic bag from the package.

2. Open the scanning unit / cover (B).

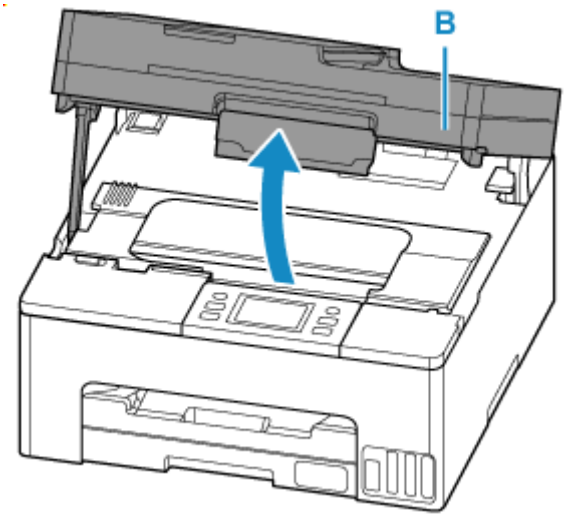

Important

- Do not touch tubes or other parts inside the printer. This can cause trouble with the printer.
- Do not put your hands inside the printer, as ink may adhere to your hands.

3. Unlock the maintenance cover lock.

Slide the maintenance cover lock to the right.

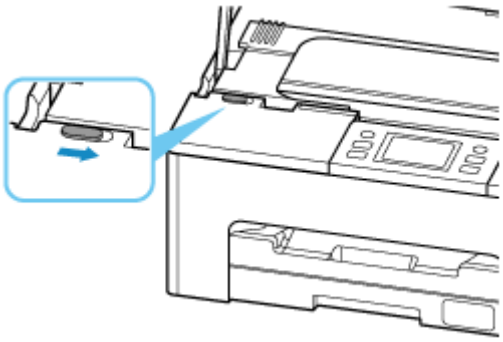

4. Pull the maintenance cover forward until it stops.

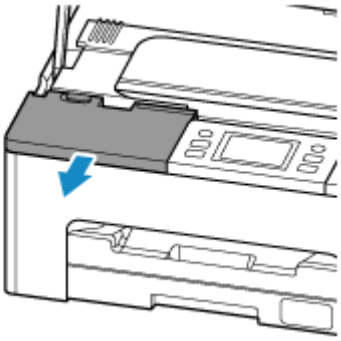

5. Remove the maintenance cover.

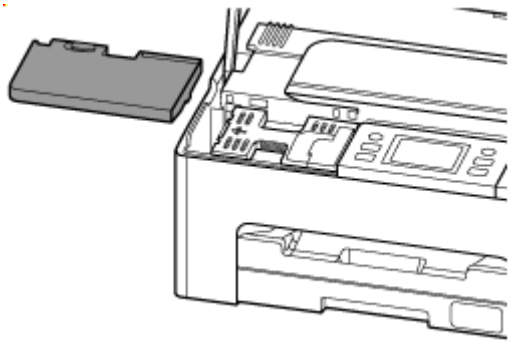

6. Slide the maintenance cartridge to the left.

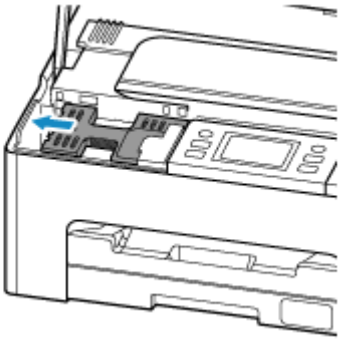

7. Lift the maintenance cartridge and remove it.

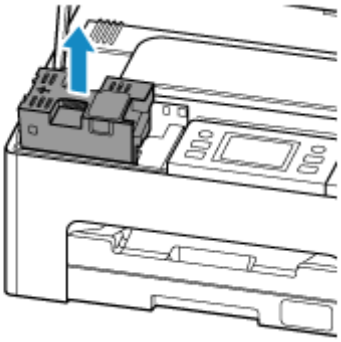

Important

- Do not drop the removed maintenance cartridge as ink may spill.

  Do not place the removed maintenance cartridge on a desk or other surface, as there may be ink on the bottom of the cartridge.

- To prevent ink from leaking, do not tilt the removed maintenance cartridge or turn it upside down.

- Put the used one immediately into the plastic bag that came with the new maintenance cartridge and seal the bag by tying the opening tightly to prevent the ink from leaking.

8. Insert a new maintenance cartridge.

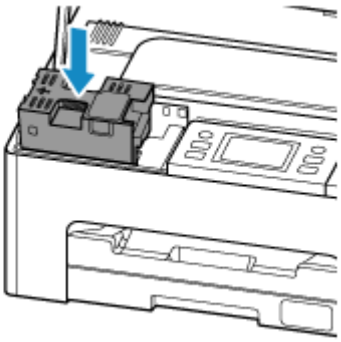

9. Slide the maintenance cartridge to the right until it reaches the end.

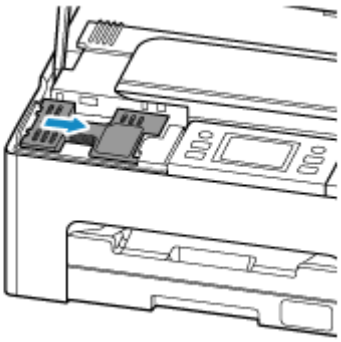

10. Attach the maintenance cover.

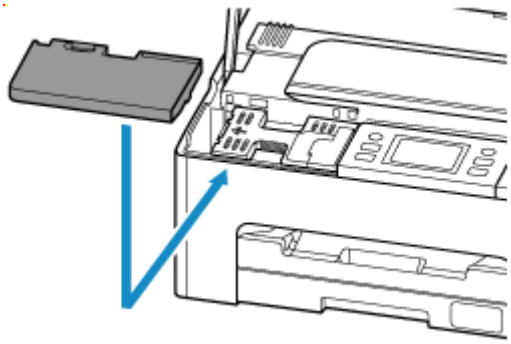

11. Lock the maintenance cover.

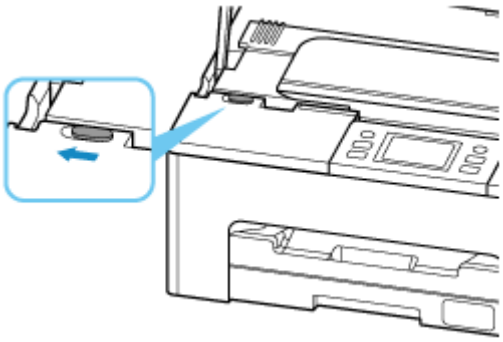

12. Close the scanning unit / cover.

To close the scanning unit / cover, lift it up slightly and then lower it gently.

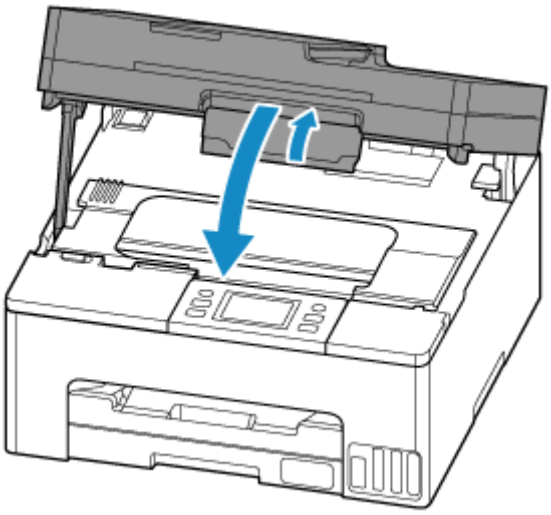

Checking Maintenance Cartridge Status on Touch Screen

1. Check that printer is turned on.

2. Select (Hint) on HOME screen.

   ➡ Using Touch Screen

   The hint menu screen will appear.

3. Select **Maintenance cart. info.**.

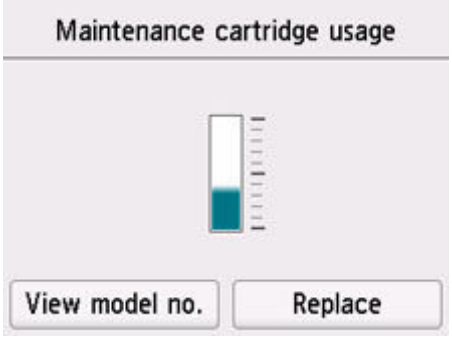

A symbol appears in the area A if there is any information about the used space of the maintenance cartridge.

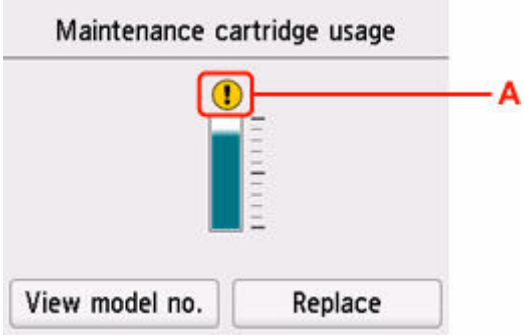

The maintenance cartridge is almost full. Replace the maintenance cartridge as soon as possible.

Note

- The above screen shows estimated used space.
- Selecting **View model no.** displays the **Maintenance cartridge model no.** screen for checking maintenance cartridge number.
- To replace the maintenance cartridge, select **Replace**.

  ➡ Replacing the Maintenance Cartridge

Changing Settings

- Changing Printer Settings from Your Computer (Windows)
- Changing Printer Settings from Your Computer (macOS)
- Changing Settings from Operation Panel
- Handling Printer Configuration Using the Web Browser

Changing Printer Settings from Your Computer (Windows)

- Changing the Print Options
- Changing the Printer Operation Mode

Changing the Print Options

You can change the detailed printer driver settings for print data that is sent from an application software.

Specify this option if you encounter print failures such as part of an image data being cut off.

1. Open the printer driver setup window

2. Click **Print Options...** on the **Page Setup** tab

   The **Print Options** dialog box opens.

3. Change the individual settings

   If necessary, change the setting of each item, and then click **OK**.

   The **Page Setup** tab is displayed again.

Changing the Printer Operation Mode

If necessary, switch between various modes of printer operation.

1. Open the **Maintenance** Tab

2. Check that the printer power is on, and click **Custom Settings**

   The **Custom Settings** dialog box opens.

   Note

   - If the printer is off or if communication between the printer and the computer is disabled, an error message may appear because the computer cannot collect the printer status.
     If this happens, click **OK** to display the most recent settings specified on your computer.

3. Configure settings

   If necessary, switch between various modes of printer operation.

4. Apply the settings

   Click **OK** and when the confirmation message appears, click **OK**.

   The printer operates with the modified settings hereafter.

Changing Printer Settings from Your Computer (macOS)

- Managing the Printer Power
- Changing the Printer Operation Mode

Managing the Printer Power

Printer power supply is operated from Remote UI.

Power control settings

Power control settings allow you to set Auto power off and Auto power on.

Auto power off is the function wherein the printer automatically turns itself off, when data is not sent or the printer remains inactive for a certain period.
The Auto power on function automatically turns on the printer when data is received.

1. Selecting **Printer settings** from Remote UI

2. Click **Power control settings**

3. Select **Use auto power control**, and then click **OK**

4. Check the displayed message and click **OK**

5. Complete the following settings:

   Auto power off
   Specify the time from the list. Printer automatically turns itself off, when data is not sent within the specified time or the printer has remained inactive.

   Auto power on
   When you check this check box, the printer automatically turns itself on when data is sent.

   Note

   - Enabling auto power on, disabling auto power off, or extending the time for auto power off will increase power consumption.

6. Apply the settings

   Click **OK**.
   The printer will operate with the changed settings hereafter.

Changing the Printer Operation Mode

If necessary, switch between various modes of printer operation.

1. Check whether the printer is on and select **Printer settings** from Remote UI

2. If necessary, complete the following settings:

   Print settings - Prevent paper abrasion

   The printer can increase the gap between the print head and the paper during high-density printing to prevent paper abrasion.
   Check this check box to prevent paper abrasion.

   Custom settings - Detect paper setting mismatch

   If the check box is deselected, at the time of printing from PC, you can continue to print without the message display even if the paper settings set in the Print dialog differs from the paper information registered to the printer.

   Ink drying wait time

   You can set the length of the printer rest time until printing of the next page begins. The wait time becomes longer as the value set in the list increases, and shorter as the value decreases.
   If the paper gets stained because the next page is ejected before the ink on the printed page dries, increase the ink drying wait time.

3. Apply the settings

   Click **OK**.

   The printer operates with the modified settings hereafter.

Changing Settings from Operation Panel

- Paper Settings
- Changing Settings from Operation Panel
- Setting Items on Operation Panel
- Security settings
- Fax settings
- Print settings
- LAN settings
- Other printer settings
- Rearrange home screen icons
- Language selection
- Firmware update
- Administrator password settings
- User management settings
- Reset settings
- Feed settings
- Web service setup
- ECO settings
- Quiet setting
- System information
- Job management
- Registering Favorite Settings (My Presets)
- Checking the Total Number of Uses of Printer

Changing Settings from Operation Panel

This section describes the procedure to change the settings, taking the steps to specify prevent abrasion as an example.

1. Check that printer is turned on.

2. Select (Setup) on the HOME screen.

   ➡ Using Touch Screen

3. Select **Printer settings**.

   The **Printer settings** screen is displayed.

4. Select a setting item to adjust.

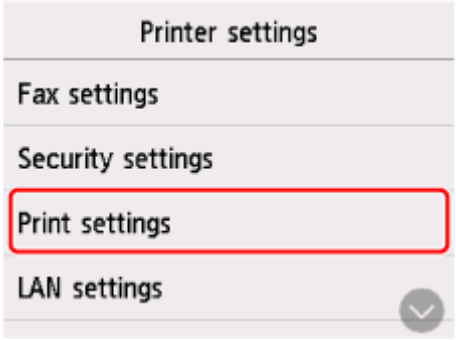

   The setting screen for the selected item is displayed.

5. Select a setting item.

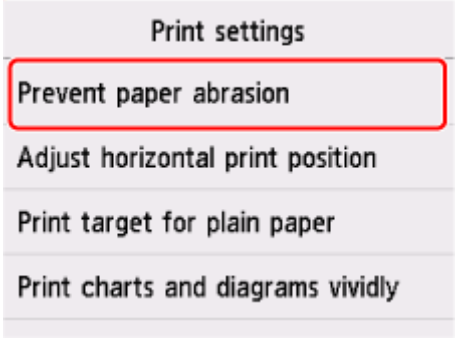

6. Select a setting to specify.

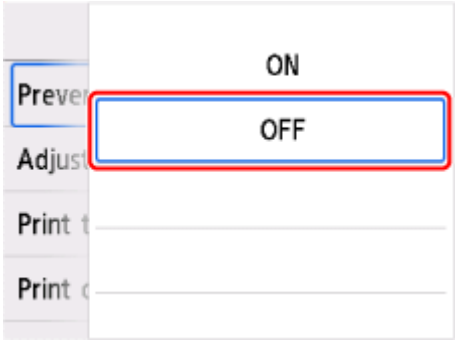

For more on setting items on the operation panel:

➡ Setting Items on Operation Panel

Setting Items on Operation Panel

Note

- The administrator password may be required to change the settings of some setting items.

Items for Printer

- Fax settings
- Other printer settings
- Rearrange home screen icons
- Language selection
- Web service setup
- ECO settings
- Quiet setting
- Registering Favorite Settings (My Presets)

Items for Paper/Printing

- Print settings
- Feed settings

Items for Maintenance/Management

- Security settings
- LAN settings
- Firmware update
- Administrator password settings
- User management settings
- Reset settings
- System information
- Job management
- Checking the Total Number of Uses of Printer

Security Settings

Select this setting item from **Printer settings** in (Setup).

Important

- The administrator password may be required to change the settings.

- **Recommended security settings**

  Make the security settings that best match your usage environment. Check the Security Settings Navigator for details on each setting.

  ➡ Set Up/Manage Security

- **Lockout settings**

  Set whether to lock password input for a period of time after multiple incorrect attempts.

  - **Enable/disable lockout**

    Enable or disable the lockout setting.

  - **Lockout threshold (times)**

    Set the number of attempts before input is locked.

  - **Lockout period**

    Set the length of time to lock input for.

- **Use of Remote UI**

  Set whether to lock use of the Remote UI.

- **Restrict destinations**

  When set to **Enable**, scan and fax destinations will be restricted.

  ### Note

  - You can only send to registered destinations.
  - You cannot edit registered information.

- **Password policy settings**

  Set whether to limit the characters that can be used when setting or inputting passwords.

Note

- Refer to the Security Guide for details on **Security settings**.

  ➡ Set Up/Manage Security

Fax settings

Select this setting item from **Printer settings** in (Setup).

Important

- The administrator password may be required to change the settings.

- Fax user settings
- Advanced fax settings
- Auto print settings
- Auto save setting
- Security control
- Easy setup

Note

- Before changing the settings, you can confirm the current settings by printing USER'S DATA LIST.

  Summary of Reports and Lists

Fax user settings

- **User information settings**

  Registers your name and fax/telephone number printed on sent faxes.

  Registering User Information

- **Telephone line type (Country or region other than China)**

  Selects the telephone line type setting for the printer.

  Setting Telephone Line Type

  ### Note

  - This setting may not be available depending on the country or region.

- **Telephone line auto selection (China only)**

  If you select **ON**, the telephone line type is selected automatically.

  If you select **OFF**, you can select the telephone line type manually.

  Setting Telephone Line Type

Advanced fax settings

- **Error reduction setting (VoIP)**

  If you select **Reduce**, it may be possible to reduce the incidence of communication errors when connecting to internet line such as IP phone.

Note

- When **Reduce** is selected, V.34 (Super G3) can not be used. Communication time generally becomes longer than when communicating with V.34 (super G3).
- This setting has priority even if you select **33600 bps** for **TX start speed** or **RX start speed**.

- **Auto redial**

  Enables/disables automatic redialing.

  If you select **ON**, you can specify the maximum number of redial attempts and the length of time the printer waits between redial attempts.

- **Dial tone detect**

  Avoids mistransmission when reception and transmission occur at the same time.

  If you select **ON**, the printer transmits the fax after confirming the dial tone.

  Note

  - This setting may not be available depending on the country or region.

- **Pause time settings**

  Sets the length of pause time for each when you enter "P" (pause).

- **TTI position**

  Selects the printing position of the sender information (outside or inside the image area).

- **Remote RX**

  Enables/disables remote reception.

  If you select **ON**, you can specify the remote reception ID.

  ➡ Remote Reception

- **Color transmission**

  When faxing color documents using the ADF, selects whether to convert them into black & white data if the recipient's fax device does not support color faxing.

  If you select **Disconnect**, the printer does not send color documents when the recipient's fax device does not support color faxing.

- **RX image reduction**

  Enables/disables automatic reduction of incoming faxes so that they fit in the selected paper.

  If you select **ON**, you can select the image reduction direction.

- **Adv. communication settings**
  - **ECM TX**

    Selects whether to send faxes in Error Correction Mode (ECM).

    ➡ Transmission/Reception of Faxes Using ECM
  - **ECM RX**

Selects whether to receive faxes in Error Correction Mode (ECM).

➡ Transmission/Reception of Faxes Using ECM

- **TX start speed**

  Selects the fax transmission speed.

  The fax transmission start speed will be faster as the value is bigger.

  When the telephone line condition or connection is poor, selecting a lower transmission start speed may solve transmission problems.

- **RX start speed**

  Selects the fax reception speed.

  The fax reception start speed will be faster as the value is bigger.

  When the telephone line condition or connection is poor, selecting a lower reception start speed may solve reception problems.

Auto print settings

- **Received documents**

  Selects whether to print the received fax automatically when receiving a fax.

  If you select **Do not print**, the received fax is stored in the printer's memory.

  For details on the received fax stored in the printer's memory:

  ➡ Document Stored in Printer's Memory

- **Activity report**

  Selects whether to print ACTIVITY REPORT automatically.

  If you select **Print**, the printer prints ACTIVITY REPORT for the 20 histories of sent and received faxes automatically.

  For details on the procedure to print ACTIVITY REPORT manually:

  ➡ Summary of Reports and Lists

- **TX report**

  Selects whether to print TX REPORT/ERROR TX REPORT automatically after sending a fax.

  If you print the report, select **Print error only** or **Print for each TX**.

  If you select **Print error only** or **Print for each TX**, you can specify the print setting that the first page of the fax is printed along with the report.

- **RX report**

  Selects whether to print RX REPORT automatically after receiving a fax.

  If you print RX REPORT, select **Print error only** or **Print for each RX**.

Auto save setting

Set whether to forward the received faxes automatically to the shared folder of a computer.

➡ Forwarding Received Faxes Automatically to Shared Folder on Computer

Security control

- **Fax number re-entry**

  If you select **ON**, you can set the printer to send faxes after entering the number twice. By using this setting, you can avoid the mistransmission of faxes.

  ➡ Preventing Mistransmission of Faxes

- **Check RX fax information**

  If you select **ON**, the printer checks whether the recipient's fax device information matches the dialed number. If it matches the number, the printer starts to send faxes.

  ➡ Preventing Mistransmission of Faxes

- **Hook key setting**

  If you select **Enable**, you can use the on hook dial function.

- **Fax reception reject**

  If you select **ON**, the printer rejects the reception of faxes with no sender information or faxes from specific senders.

  ➡ Rejecting Fax Reception

- **Caller rejection**

  If you subscribe to the Caller ID service, the printer detects the sender's Caller ID. If the sender's ID matches the condition specified in this setting, the printer rejects the phone call or fax reception from the sender.

  If you select **Yes** on the subscribing confirmation screen, you can specify the settings of rejection.

  ➡ Using Caller ID Service to Reject Calls

  Note

  - This setting may not be supported depending on the country or region. Contact your telephone company to confirm whether it provides this service.

Easy setup

The printer must be set up depending on your telephone line and use of the faxing function. Follow the procedure according to the instructions on the touch screen.

Note

- You can specify the setup setting individually or the advanced setting.

  For details on how to specify the setting:

➡ Preparing for Faxing

Print settings

Select this setting item from **Printer settings** in (Setup).

- **Prevent paper abrasion**

  Use this setting only if the print surface becomes smudged.

  Important

  - Be sure to set this back to **OFF** after printing since it may result in lower printing speed or lower print quality.

- **Adjust horizontal print position**

  Adjusts the print position when the left/right margins are not aligned.

  You can adjust the left/right margins in increments of 0.004 in. (0.1 mm) between -0.12 in. (-3 mm) and +0.12 in. (+3 mm) centered on the horizontal center of the paper.

  Important

  - When using A4/Letter sized paper, the amount of adjustment that can be made is limited. You cannot make adjustments greater than this limit.

- **Print target for plain paper**

  Select **Text only** or **Text and photos** for plain paper printing.

  Note

  - As print results, if you are conscious of unevenness or textures of granularity, select **Text and photos**.

- **Print charts and diagrams vividly**

  Use this setting when you want to print charts and diagrams in documents vividly on plain paper.

  This feature gives preference to printer driver settings.

  When you want to give preference to printer settings, select **Use Printer Settings** in the **Print charts and diagrams in documents more vividly (plain paper)** in **Print Options** dialog box in the printer driver settings below.

  ➡ Page Setup Tab Description

  Note

  - This feature will be implemented with the following settings.
    - Plain paper
    - Color printing
    - Size is a template size or a user-defined size within the range of a template size

    * The feature may not be implemented even when the above settings are selected, depending on other setting details.

- Processing may differ depending on settings and may result in the same data having different tones. Turn this setting off if you want to avoid differences in tone.

LAN settings

Select this setting item from **Printer settings** in (Setup).

Important

- The administrator password may be required to change the settings.

➡ Wi-Fi
➡ Wireless Direct
➡ Wired LAN

To print the network settings, select **Print details** and select **Yes**.

➡ Printing Network Settings

Important

- The network settings printout contains important information about your network. Handle it with care.

Wi-Fi

- **Wi-Fi setting list**

  The network settings information of the printer appears when it is connected by Wi-Fi. (Some setting items are not displayed depending on the printer settings.)

Items	Setting
Connection	Enabled (connected)/Enabled (disconnected)/Disable
Network name (SSID)	XXXXXXXXXXXXXXXX XXXXXXXXXXXXXXXX
Frequency	2.4 GHz/5 GHz
Wi-Fi security	Inactive/WPA-PSK/WPA2-PSK/WPA3-PSK/WPA-EAP(AES)/WPA2-EAP(AES)/WPA3-EAP(AES)
Signal strength (%)	XXX
IPv4 address	XXX. XXX. XXX. XXX
IPv4 subnet mask	XXX. XXX. XXX. XXX
IPv4 default gateway	XXX. XXX. XXX. XXX
IPv6 link-local address	XXXX: XXXX: XXXX: XXXX: XXXX: XXXX: XXXX: XXXX
MAC address (Wi-Fi)	XX:XX:XX:XX:XX:XX
Printer name	XXXXXXXXXXXXXXX
Bonjour service name	XXXXXXXXXXXXX XXXXXXXXXXXXX XXXXXXXXXXXXX XXXXXXXXXXXXX

("XX" represents alphanumeric characters.)

- **Enable/disable Wi-Fi**

  Enables/disables Wi-Fi.

- **Wi-Fi setup**

  Selects the setup method for Wi-Fi connection.

  - **Easy wireless connect**

    Select if you specify the settings of the access point information to the printer directly from a device (e.g. smartphone, or tablet) without operating the wireless router. Follow the on-screen instructions of the connecting device for the setup procedure.

  - **Manual connect**

    Select when you perform settings for Wi-Fi manually using the operation panel of the printer.

  - **WPS (Push button method)**

    Select when you perform settings for Wi-Fi using a wireless router supporting a Wi-Fi Protected Setup (WPS) push button method. Follow the on-screen instructions during setup.

  - **Other connection types**

    - **WPS (PIN code method)**

      Select when you perform settings for Wi-Fi using a wireless router supporting a Wi-Fi Protected Setup (WPS) PIN code method. Follow the on-screen instructions during setup.

- **Advanced**

  For details on each setting item:

  ➡ Advanced setup

Wireless Direct

- **Wireless Direct setting list**

  The network settings information of the printer appears when it is connected by the wireless direct. (Some setting items are not displayed depending on the printer settings.)

Items	Setting
Connection	Enable/Disable
Network name (SSID)	DIRECT-XXXXXXXXX XXXXXXXXXXXXXXXX
Password	XXXXXXXXXX
Frequency	2.4 GHz/5 GHz
Wi-Fi security	WPA2-PSK(AES)
No. of printers connected now	XX/XX
IPv4 address	XXX. XXX. XXX. XXX
IPv4 subnet mask	XXX. XXX. XXX. XXX

IPv4 default gateway	XXX. XXX. XXX. XXX
IPv6 link-local address	XXXX: XXXX: XXXX: XXXX: XXXX: XXXX: XXXX: XXXX
MAC address (Wi-Fi)	XX:XX:XX:XX:XX:XX
Printer name	XXXXXXXXXXXXXXX
Bonjour service name	XXXXXXXXXXXXX XXXXXXXXXXXXX XXXXXXXXXXXXX XXXXXXXXXXXXX

("XX" represents alphanumeric characters.)

- **Connect to smartphone**

  Enables to connect the smartphone to the printer by reading the QR code displayed on the touch screen with the smartphone, or also by manually obtaining the network name and password.

- **Enable/disable Wireless Direct**

  Enables/disables Wireless Direct.

- **Change network name (SSID)**

  Changes the identifier (SSID/the printer's name displayed on a Wi-Fi Direct compatible device) for Wireless Direct.

- **Change password**

  Changes the password for Wireless Direct.

- **Connection request confirmation**

  Selecting **ON** displays the confirmation screen when a Wi-Fi Direct compatible device is connecting the printer.

- **2.4GHz/5GHz Switch**

  Select a frequency.

- **Advanced**

  For details on each setting item:

  ➡ Advanced setup

Wired LAN

- **Wired LAN setting list**

  The network settings information of the printer appears when it is connected by wired LAN. (Some setting items are not displayed depending on the printer settings.)

Items	Setting
Connection	Enabled (connected)/Enabled (disconnected)/Disable
IPv4 address	XXX. XXX. XXX. XXX

IPv4 subnet mask	XXX. XXX. XXX. XXX
IPv4 default gateway	XXX. XXX. XXX. XXX
IPv6 link-local address	XXXX: XXXX: XXXX: XXXX: XXXX: XXXX: XXXX: XXXX
MAC address (Wired LAN)	XX:XX:XX:XX:XX:XX
Printer name	XXXXXXXXXXXXXXX
Bonjour service name	XXXXXXXXXXXXX XXXXXXXXXXXXX XXXXXXXXXXXXX XXXXXXXXXXXXX

("XX" represents alphanumeric characters.)

- **Enable/disable Wired LAN**

  Enables/disables wired LAN.

- **Advanced**

  For details on each setting item:

  ➡ Advanced setup

Advanced setup

- **Set printer name**

  Specifies the printer name. You can use up to 15 characters for the name.

  Note

  - You cannot use the same printer name as that already used for other LAN connected devices.
  - You cannot use a hyphen for the initial or last character of the printer name.

- **TCP/IP settings**

  Performs IPv4 or IPv6 setting.

- **WSD settings**

  Setting items when you use WSD (one of the network protocols supported in Windows).

  - **Enable/disable WSD**

    Selects whether WSD is enabled or disabled.

    Note

    - When this setting is enabled, the printer icon is displayed on the Network Explorer in Windows.

  - **Optimize inbound WSD**

    Selecting **Enable** allows you to receive the WSD printing data faster.

  - **WSD scan from this printer**

Selecting **Enable** allows you to transfer the scanned data to the computer using WSD. To transfer the scanned data, press **Color** button.

Note

- When you forward the scanned data to the computer searched using WSD, you cannot select the document type.

- **Timeout settings**

  Specifies the timeout length.

- **Bonjour settings**

  Setting items when you use Bonjour.

  - **Enable/disable Bonjour**

    Selecting **Enable** allows you to use Bonjour to perform the network settings.

  - **Service name**

    Specifies the Bonjour service name. You can use up to 48 characters for the name.

    Note

    - You cannot use the same service name as that already used for other LAN connected devices.

- **LPR protocol settings**

  Enables/disables the LPR setting.

- **RAW protocol**

  Enables/disables RAW printing.

- **LLMNR**

  Enables/disables LLMNR (Link-Local Multicast Name Resolution). Selecting **Enable** allows the printer to detect printer's IP address from the printer name without a DNS server.

- **IPP settings**

  Selecting **Enable** allows you to print via the network with the IPP protocol.

- **Wi-Fi DRX settings**

  Selecting **Enable** allows you to activate discontinuous reception when using Wi-Fi (discontinuous reception).

  Note

  - Depending on the Wi-Fi router used, discontinuous reception may not be activated even though **Enable** is selected.
  - Discontinuous reception is enabled only while the printer is on standby. (The touch screen is in the screen saver mode.)

- **Wired LAN DRX settings**

  Selecting **Enable** allows you to activate discontinuous reception when the printer is connected to a device compatible with wired LAN. The discontinuous reception can reduce power consumption.

- **IPsec settings**

  Selecting **Enable** allows you to specify the IPsec security.

- **IEEE802.1X/EAP settings**

  Setting item when you use IEEE802.1X/EAP (WPA/WPA2 Enterprise).

  - **Enable/disable**

    Enables/disables IEEE802.1X/EAP.

  - **Search for EAP router**

    Searches switch/access point of IEEE802.1X/EAP and display it.

  - **Last authentication result**

    Displays the latest authentication result of IEEE802.1X/EAP setting.

- **Easy wireless connect**

  When set to **Auto start: ON**, the device will automatically put into the standby mode for easy wireless connect.

  To prevent the device from putting into the standby mode for easy wireless connect at unintended times, set to **Auto start: OFF**.

Other printer settings

Select this setting item from **Printer settings** in (Setup).

Important

- The administrator password may be required to change the settings.

- **Date/time settings**

  Sets the current date and time.

  ➡ Setting Sender Information

- **Date display format**

  Selects the date display format.

- **Daylight saving time setting**

  Enables/disables the summer time setting. If you select **ON**, you can select additional sub-settings. This setting may not be available depending on the country or region.

  - **Start date/time**

    Sets the date and time that summer time starts.

    Month: Specify the month.

    Week: Specify the week.

    DOW: Specify the day of the week.

    The screen to set the shift time to start summer time will be displayed after specifying the items above and selecting **OK**.

    After specifying the shift time and selecting **OK**, you can specify the end date/time.

  - **End date/time**

    Sets the date and time that summer time ends.

    Month: Specify the month.

    Week: Specify the week.

    DOW: Specify the day of the week.

    The screen to set the shift time to end summer time will be displayed after specifying the items above and selecting **OK**.

    Specify the shift time and select **OK**.

- **Sound control**

  Selects the volume.

  - **Keypad volume**

    Selects the beep volume when pressing the touch screen or the buttons on the operation panel.

  - **Alarm volume**

Selects the alarm volume.

- **Line monitor volume**

  Selects the line monitor volume.

- **Offhook alarm**

  Selects the alarm volume when the phone receiver is not put on the hook properly.

- **Country or region**

  Selects the country or region where you are using the printer.

  Note

  - This setting may not be available depending on the country or region.

- **Power control**

  Allows you to turn on/off the printer automatically to save electricity. In addition, you can specify the time and day to turn it on/off.

  Note

  - If this setting is changed, power consumption may increase.

  - **Use auto power control**

    Specifies the length of time to turn off the printer automatically when no operation is made or no printing data is sent to the printer. In addition, you can allow the printer to turn on automatically when a scanning command from a computer or printing data is sent to the printer.

  - **Use scheduling**

    Specifies the time to turn on/off the printer automatically for each day of the week.

  - **Do not use power control**

    Disables the function to turn on/off the printer automatically.

- **Time zone**

  Specifies the time zone according to a country or region you live in.

  Specifying the time zone to the printer allows you to display the correct time an e-mail was sent from the main unit on your mail software.

- **Original removal reminder**

  Selects whether the printer will display the reminder screen in case you forget to remove the original from the platen after scanning.

  Important

  - Depending on the type of original or the state of the document cover, forgetting to remove the original may not be detected.

- **Keyboard settings**

  Set the keyboard.

  Select **Full keyboard** to select the keyboard layout from the following three types.

- **QWERTY**
- **QWERTZ**
- **AZERTY**

- **Ink level monitor**
  - **Reset ink level count**

    When adding the ink to the upper limit with the ink remained in the ink tank, reset the ink residual amount count to 100%.

- **Force ink tank selection**

  You can specify the ink to use.
  - **All ink tanks**

    Use both color ink and black ink.
  - **Black only**

    Use only black ink.

    Note

    - When any of the inks reached the lower limit line, printing and copying are disabled.

- **Fixed print quality**

  Specifies print quality when printing on plain paper.

- **Screen lock settings**

  Lock the screen to prevent the panel operation by someone other than the administrator.

- **External server connection**
  - **Start external server connection**

    Start external server connection.
  - **Check ext. server connection**

    Check external server connection.
  - **Enable/disable screen lock**

    Enable/disable screen lock when connected to an external server.

- **Notification settings**

  All notification screens are not displayed if you select **No**.

- **Status light settings**
  - **Brightness settings**

    Select the brightness of the status light.
  - **Color settings**

    Select the color of the status light.

Rearrange home screen icons

You can rearrange the icons on the home screen to an easy-to-use order.

1. Check that printer is turned on.

2. Select **Setup** on the HOME screen.

   ➡ Using Touch Screen

   The setup menu screen will appear.

3. Select **Printer settings**.

   The **Printer settings** screen is displayed.

4. Select **Rearrange home screen icons**.

   The list of function displayed on the home screen is displayed.

5. Select the function that you want to change the order, then tap or .

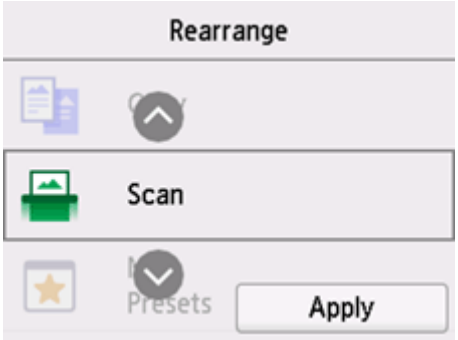

6. Select **Apply**.

   The list is displayed in the order the function was changed.

7. Select **Exit**.

Language selection

Select this setting item from **Printer settings** in (Setup).

Changes the language for the messages and menus on the touch screen.

Important

- The administrator password may be required to change the settings.

Japanese / English / German / French / Italian / Spanish / Portuguese / Dutch / Danish / Norwegian / Swedish / Finnish / Russian / Ukrainian / Polish / Czech / Slovene / Hungarian / Slovak / Croatian / Romanian / Bulgarian / Turkish / Greek / Estonian / Latvian / Lithuanian / Simplified Chinese / Korean / Traditional Chinese / Thai / Indonesian / Vietnamese

Firmware update

Select this setting item from **Printer settings** in (Setup).

You can update the firmware of the printer, check the firmware version, or perform settings of a notification screen, a DNS server and a proxy server.

Important

- The administrator password may be required to change the settings.
- When you use this function, make sure the printer is connected to the Internet.
- Do not turn off the power of a printer while firmware is being updated.

- **Install update**

  Performs the firmware update of the printer. If you select **Yes**, the firmware update starts. Follow the on-screen instructions to perform update.

- **Check current version**

  You can check the current firmware version.

- **Update notification settings**

  You can set the printer to display the firmware update information on the touch screen when the firmware update is available.

  When **Idle/Power off** is selected, the printer informs you of the update during idle and the update information also appears when you press the **ON** button.

- **Auto update settings**

  Select **ON** to automatically update the firmware to the latest version.

- **DNS server setup**

  Performs settings for a DNS server. Select **Auto setup** or **Manual setup**. If you select **Manual setup**, follow the display on the touch screen to perform settings.

- **Proxy server setup**

  Performs settings for a proxy server. Follow the display on the touch screen to perform settings.

Administrator password settings

The administrator password can be set or canceled.

Important

- The administrator password of the printer is set by default. It is set in the serial number of the printer which consists of 9 characters (the first 4 characters are alphabet and the latter 5 characters are number) and is indicated on the seal on the device.
- The administrator password may be required to change the settings.

1. Check that printer is turned on.

2. Select **Setup** on the HOME screen.

   ➡ Using Touch Screen

3. Select **Printer settings**.

   The **Printer settings** screen is displayed.

4. Select **Administrator password settings**.

5. If the authentication screen for an administrator password is displayed, enter a password, then select **OK**.

   When the administrator password is not set, the registration confirmation message is displayed. Select **Yes**. The message is displayed again. Then, select **OK** and proceed to step 7.

6. Select **Change administrator password**.

   When you do not set the administrator password, select **Remove administrator password**. Select **Yes** in the displayed screen. The message is displayed again. Then, select **OK**.

7. Select the effective range of the administrator password.

   Remote UI and other tools
   To change the setting using the remote UI or a certain software, the administrator password needs to be entered.

   LCD, Remote UI, and other tools
   To change the setting using the operation panel of this printer, remote UI or a certain software, the administrator password needs to be entered.

8. Enter the administrator password.

   Enter the password using 8 to 32 alphanumeric characters and symbols.

9. Select **Apply**.

10. Enter the administrator password again.

11. Select **Apply**.

    The administrator password is available.

Note

- When the administrator password is canceled or the effective range of the administrator password is set to **Remote UI and other tools**, the user management is disabled.

User management settings

The administrator makes settings to manage users.

Important

- The administrator password may be required to change the settings.

1. Check that printer is turned on.

2. Select **Setup** on the HOME screen.

   Using Touch Screen

   The setup menu screen will appear.

3. Select **Printer settings**.

   The **Printer settings** screen is displayed.

4. Select **User management settings**.

   Enable/disable user management

   Set the valid/invalid of the administration of the user registered by the remote UI.

   1. Select **ON**.
   2. Select **Log in**.

   Auto logout time

   When the operation is not performed by the registered user, set the time to log out automatically.

   Select **Auto logout time**, and set the time.

Reset settings

Select this setting item from **Printer settings** in (Setup).

You can set the settings back to the default.

Important

- The administrator password may be required to change the settings.

- **Web service setup only**

  Sets the Web service settings back to the default.

- **LAN settings only**

  Sets the LAN settings back to the default.

- **Telephone number only**

  Deletes all registered telephone/fax numbers.

- **Settings only**

  Returns the settings such as the paper size, media type, or other setting items back to the default. The LAN settings and the telephone/fax number are not returned back to the default.

- **E-mail address book entries only**

  Deletes all registered e-mail addresses.

- **Fax settings only**

  Returns all fax settings back to the default. Disconnect the telephone line from the printer before you return this setting item back to the default.

- **Reset all**

  Sets all settings you made to the printer back to the default. The administrator password specified by Remote UI or Wi-Fi Connection Assistant reverts to the default setting. All faxes stored in the printer's memory are also deleted.

  ### Note

  - You cannot set the following setting items back to the default:
    - Security policy
    - The language displayed on the touch screen
    - The current position of the print head
    - The country or region selected for **Country or region**
    - The cumulative usage count of copy, scan, fax, etc. registered in **Usage stats**.
    - CSR (Certificate Signing Request) for encryption method (SSL/TLS) setting

- **Security policy only**

  The Security administrator password and all Security policies will be reset. If a security administrator password has been set, the security administrator password is required to perform the reset.

Note

- User mode settings restricted by the security policy will not be changed. (Feature settings will not be returned to the settings prior to security restrictions under the security policy.)

Feed settings

Select this setting item from (Setup).

Note

- By registering the paper size and the media type, the message can be displayed before printing starts when the paper size or the media type of the loaded paper differs from the paper settings.

  ➡ Paper Settings

- **Cassette paper settings**

  Registers the paper size you load in the cassette.

- **Paper settings mismatch (Copy)/Paper settings mismatch (Other)**

  If you select **Enable**, the printer detects whether the paper size and the media type are identical with those registered in **Feed settings**. If printing starts with the settings that do not match, an error message is displayed on the touch screen.

  ### Note

  - When **Disable** is selected, the settings in **Feed settings** is disabled.

- **Detect paper width**

  If you select **ON**, the printer detects the paper size when loading paper. A screen for confirming the setting of paper is displayed.

  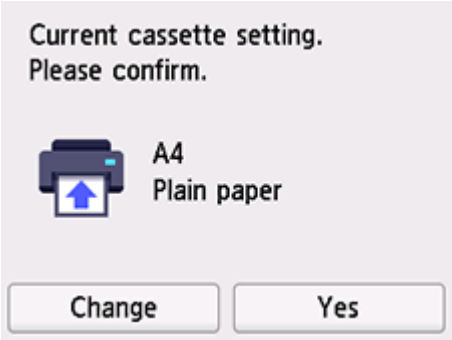

  ### Note

  - A screen for confirming the setting of paper is not displayed if you select **OFF**. Set the size and type of paper properly in **Cassette paper settings** when making prints.
  - For AirPrint of iOS/iPadOS, paper may be printed based on the paper size set during paper loading. It is recommended to set to **ON** when making prints using an AirPrint function.

Web service setup

Select this item from (Setup).

Important

- The administrator password may be required to change the settings.

- **Web service usage registration/Web service usage cancellation**

  Registers/Deletes Web service usage to use the printer device information to/from PIXMA/MAXIFY Cloud Link.

- **Web service connection setup**

  The following setting items are available.

  - **IJ Cloud Printing Center setup**

    Registers/Deletes the printer to/from Canon Inkjet Cloud Printing Center and sets the history saving.

  - **Check Web service setup**

    Make sure whether the printer is registered to Canon Inkjet Cloud Printing Center.

- **Issue registration code**

  In order to link the web service and printer, obtain the registration code from the service origin.

- **DNS server setup**

  Performs settings for a DNS server. Select **Auto setup** or **Manual setup**. If you select **Manual setup**, follow the display on the touch screen to perform settings.

- **Proxy server setup**

  Performs settings for a proxy server. Follow the display on the touch screen to perform settings.

ECO settings

This setting allows you to use automatic duplex printing as a default to save paper and to turn on/off the printer automatically to save electricity.

Important

- The administrator password may be required to change the settings.

➡ Using Power Saving Function
➡ Using Duplex Printing

Using Power Saving Function

Follow the procedure below to use power saving function.

1. Check that printer is turned on.

2. Select (Setup) on the HOME screen.

   ➡ Using Touch Screen

3. Select **ECO**.

4. Select **Power control**.

5. Select **Use auto power control**.

6. Specify settings as necessary.

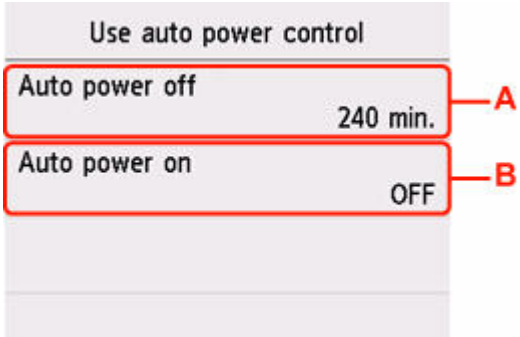

A: Specify the length of time to turn the printer off automatically when no operation is made or no printing data is sent to the printer.

B: Selecting **ON** enables the printer to turn on automatically when a scanning command from a computer or printing data is sent to the printer.

Note

- If this setting is changed, power consumption may increase.

- Selecting **Use scheduling** allows you to set time and day to turn on/off the power automatically.
- Selecting **Do not use power control** disables all settings of the power control and scheduling.

Using Duplex Printing

Follow the procedure below to use duplex printing.

1. Check that printer is turned on.

2. Select (Setup) on the HOME screen.

   ➡ Using Touch Screen

3. Select **ECO**.

4. Select **Two-sided print settings**.

5. Specify settings as necessary.

C: Select two-sided copying as a default.

D: Select two-sided printing of sent/received faxes, reports, or lists as a default.

E: Select two-sided printing of template forms on the printer as a default.

Quiet setting

Enables this function on the printer if you want to reduce the operating noise, such as when printing at night. In addition, you can specify the time range to reduce the operating noise.

Important

- The administrator password may be required to change the settings.
- Set the current date and time in advance.

  ➡ Setting Sender Information

Follow the procedure below to perform setting.

1. Check that printer is turned on.

2. Select (Setup) on the HOME screen.

   ➡ Using Touch Screen

3. Select **Quiet setting**.

4. Select **ON** or **Use during specified hours**.

   - When **ON** is selected:

     You can reduce the operating noise while printing is in progress.

   - When **Use during specified hours** is selected:

     The screen to specify starting/ending time is displayed.

     Tap Time and specify **Start time**.

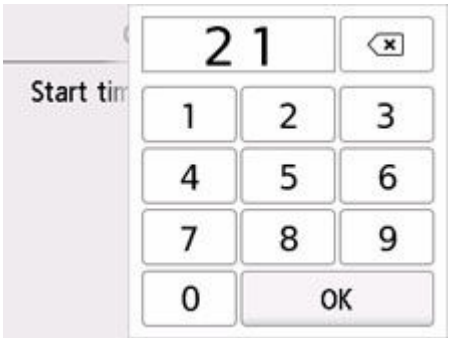

Specify **End time** in the same procedure, and select **OK**.

You can reduce the operating noise during the specified time.

The confirmation screen is displayed and the icon appears as the **Quiet setting** menu icon.

Important

- Operating speed is reduced compared to when **OFF** is selected.
- This function may not be so effective depending on the printer's setting. Furthermore, certain noise, such as when the printer is preparing for printing, is not reduced.

System information

Select this item from (Hint).

- **Current version**

  Displays the current firmware version.

- **Printer name**

  Displays the printer name currently specified.

- **Serial number**

  Displays the printer serial number.

- **MAC address (Wi-Fi)**

  Displays the MAC address for Wi-Fi.

- **MAC address (Wired LAN)**

  Displays the MAC address for wired LAN.

- **Root cert. thumbprint (SHA-1)**

  Shows the root certification thumbprint (SHA-1) of the printer.

- **Root cert. thumbprint (SHA-256)**

  Shows the root certification thumbprint (SHA-256) of the printer.

Job management

Select this item from (Hint).

Important

- The administrator password may be required to change the settings.

- **Display job history**

  Displays the job history of **Print from**/**Copy**/**Communication log**.

- **Print job history**

  Prints the job history of **Print from**/**Copy**/**Communication log**.

- **Restrict job history access**

  This is the menu for the developer.

Registering Favorite Settings (My Presets)

You can register the favorite copying, scanning, or faxing settings and call them up from the HOME screen.

You can register up to 20 settings.

- Registering the Setting
- Calling Up the Registered Setting
- Editing/Deleting the Registered setting

Registering the Setting

Select **Save profile** on each standby screen or on the screen displayed after the settings are specified.

Copy standby screen

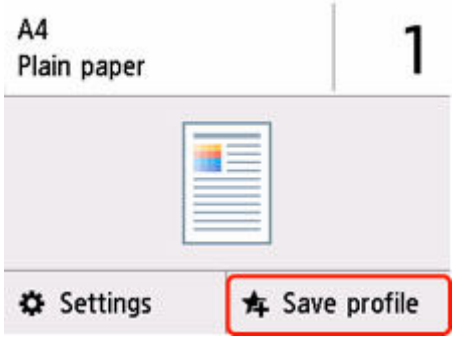

Scan standby screen

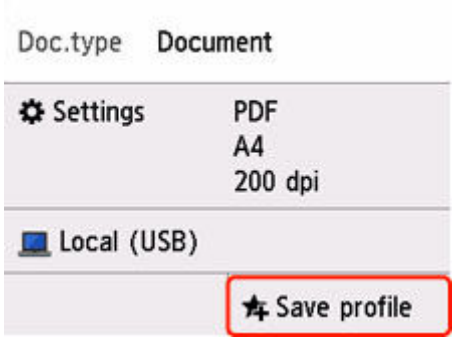

Fax transmission standby screen

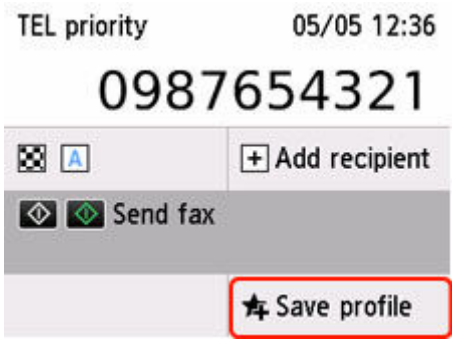

When the confirmation screen of **Save profile** is displayed, select **Yes**.

When the screen to enter the name of the setting is displayed, enter the name and select **Register**.

Calling Up the Registered Setting

Follow the procedure below to call up the registered setting.

1. Check that printer is turned on.

2. Select **My Presets** on the HOME screen.

   ➡ Using Touch Screen

3. Select setting you want to call up.

Editing/Deleting the Registered setting

Follow the procedure below to edit or delete the registered setting.

1. Check that printer is turned on.

2. Select **My Presets** on the HOME screen.

   ➡ Using Touch Screen

3. Select **Edit/delete**.

   You can change the order or name of the registered settings and delete the settings.

   - To change the order of the registered settings
     1. Select **Rearrange**.
     2. Select setting you want to move.
     3. Tap or to move selected setting.
     4. Select **Apply**.
     5. Select **Exit**.
   - To change the name of the registered settings
     1. Select **Rename**.
     2. Select setting you want to rename.
     3. Enter new name and tap **OK**.
     4. Select **Exit**.
   - To delete the registered settings
     1. Select **Delete**.
     2. Select setting you want to delete.
     3. Select **Yes** on displayed screen.

4. Select **Exit**.

Checking the Total Number of Uses of Printer

You can check the total number of uses of the printer (e.g. the total number of printing, copying, sending/receiving faxes, or scanning).

1. Check that printer is turned on.

2. Select (Hint) on HOME screen.

   ➡ Using Touch Screen

   The hint menu screen will appear.

3. Select **Usage stats**.

4. Select item to check.

   Total sheets used on the device
   Displays the total number of printing.

   No. of sheets used for copying
   Displays the total number of copying.

   No. of sheets used for fax
   Displays the total number of received or printed faxes.

   Sheets used for other functions
   Displays the total number of printing other than copying or faxing.

   Number of fax sheets sent
   Displays the total number of sent faxes.

   Number of sheets scanned
   Displays the total number of scanning.

   Print usage statistics
   The total number of uses of printer can be printed and checked.

   Note

   - The record of the total number of uses is not reverted even if the printer is reverted back to the default by **Reset settings** in **Printer settings**.

Basic Information

- **Safety**
  - Safety Precautions
  - Regulatory Information
  - WEEE
- **Handling Precautions**
  - Canceling Print Jobs
  - Legal Restrictions on Scanning/Copying
  - Printer Handling Precautions
  - Transporting Your Printer
  - When Repairing, Lending, or Disposing of the Printer
  - Keeping Print Quality High
  - Ink Tips
- **Specifications**
  - Product Specifications
  - Supported Paper Sizes and Weights
  - Print Area
  - Paper Load Limit

Safety

- Safety Precautions
- Regulatory Information
- WEEE

Safety Precautions

Safety Precautions

- This manual contains important notices and safety precautions about your printer.

  Do not use the printer in ways other than described in the accompanying manuals, as this may result in fire, electric shock or other unexpected accidents.

  Safety standard marks and declarations are only valid for the supported voltages and frequencies in the applicable countries or regions.

⚠ Warning

- Users with cardiac pacemakers:

  This product emits a low-level magnetic flux. If you feel abnormalities, please move away from the product and consult your doctor.

- Do not use the printer in the following cases:

  Stop use immediately, unplug the printer and call your local service representative to request repair.

  - Metal objects or liquids are spilt inside the printer.
  - The printer emits smoke, strange odors, or makes unusual noises.
  - The power cord or plug overheat or are broken, bent or damaged in any way.

- Failure to adhere to the following may result in fire, electric shock, or injury:
  - Do not place product close to the flammable solvents such as alcohol or thinner.
  - Do not open or modify the printer.
  - Use only the power cord/cables that came with your printer. Do not use these cables with other devices.
  - Do not plug in to voltages or frequencies other than those specified.
  - Plug the power cord into the socket completely.
  - Do not plug in or unplug the power cord with wet hands.
  - Do not damage the power cord or other cables by twisting, bundling, tying, pulling or excessively bending them.
  - Do not place heavy objects on the power cord.
  - Do not connect multiple power cords to a single electrical outlet. Do not use multiple extension cords.
  - Do not leave the printer plugged in during lightning storms.
  - Always unplug the power cord and cables when cleaning. Do not use flammable sprays or liquids such as alcohol or thinners for cleaning.
  - Unplug the power cord once a month to check that it is not overheating, rusted, bent, scratched, split, or otherwise damaged.

⚠ Caution

- Do not put your hands inside the printer while printing.
- Do not touch the metal parts of the print head immediately after printing.
- Do not touch moving parts indicated by the sticker shown here. Some models may not have these parts.

Moving parts

Keep body parts away from moving parts. Keep body parts out of the motion path.

- Ink bottles
  - Keep out of reach of children.
  - Do not drink ink.
    If ink is accidentally licked or swallowed, rinse out your mouth or drink one or two glasses of water and obtain medical advice immediately.
    If ink gets into your eyes, flush them with water right away, and obtain medical advice immediately.
  - If ink gets on your skin, wash the area with soap and water immediately. If irritation to your skin persists, obtain medical advice immediately.
  - When you store ink bottles, close bottle caps completely and place bottles in standing position. If the ink bottles are laid down, ink may leak.
  - When refilling ink tanks, take sufficient care to prevent ink from spattering onto surroundings.
  - Ink may stain clothes or other belongings permanently. Washing may not remove ink stains.
  - Do not leave ink bottles in areas exposed to high temperature, such as near fire or a heater or in a car. Bottles may warp and cause ink leakage or ink may become poor quality.
  - Do not subject ink bottles to impacts. Ink bottles may be damaged or bottle caps may come off by such impact, and ink may leak.
  - Do not transfer ink to other containers. This may result in accidental ingestion, inappropriate use, or poor ink quality.
- Moving the printer
  - Hold the printer by its sides and carry it with both hands.

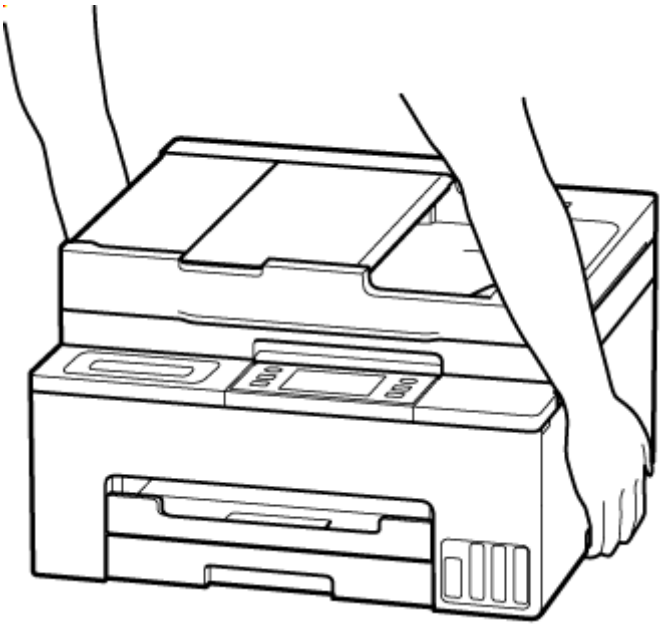

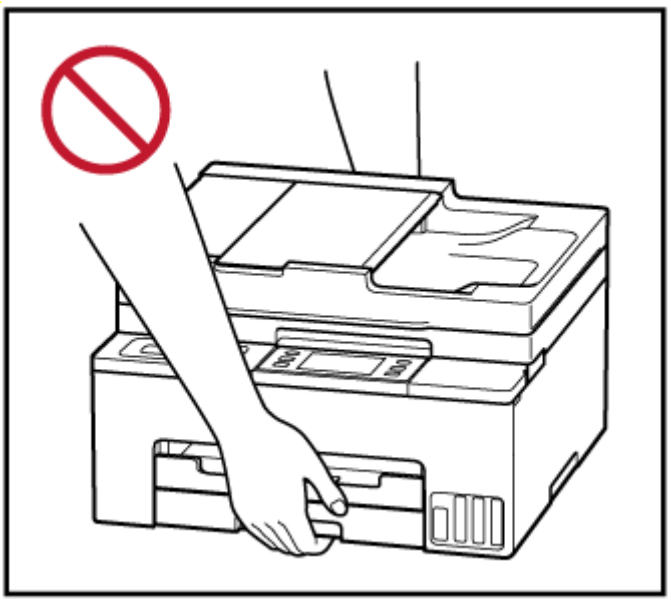

General Notices

Choosing a Location

Refer to "Specifications" in the Online manual for details on operating environment.

- Do not install the printer in a location that is unstable or subject to excessive vibration.
- Do not install the printer in locations that get very hot (direct sunlight, or close to a heating source), very humid or dusty locations, or outdoors.
- Do not place the printer on a thick rug or carpet.
- Do not place the printer flush against a wall.

Power Supply

- Keep the area around the power outlet clear at all times so you can easily unplug the power cord if necessary.
- Never remove the plug by pulling on the cord.

General Notices

- Do not tilt the printer, stand it on end, or turn it upside down. This may cause ink to leak.
- Do not place anything on top of the printer. Be especially careful to avoid metal objects such as paper clips and staples, and containers holding flammable liquids such as alcohol or thinner.
- Be sure to observe the following when loading the original on the platen. Failure to observe the following may cause the scanner to malfunction or the platen glass to break.
  - Do not place any objects weighing 4.4 lb (2.0 kg) or more on the platen glass.
  - Do not put any pressure of 4.4 lb (2.0 kg) or more on the platen glass, such as pressing down the original.
- Modifying or dismantling the print head or ink bottles, such as by putting holes in them, could cause the ink to leak out and cause a malfunction. We recommend that you do not modify or dismantle them.

- Do not put the print head or ink bottles into a fire.

Regulatory Information

IMPORTANT SAFETY INSTRUCTIONS

SAVE THESE INSTRUCTIONS

When using your telephone equipment, basic safety precautions should always be followed to reduce the risk of fire, electric shock and injury to persons, including the following:

1. Do not use this product near water, for example, near a bath tub, wash bowl, kitchen sink or laundry tub, in a wet basement or near a swimming pool.
2. Avoid using this product during an electrical storm. There may be a remote risk of electric shock from lightning.
3. Do not use this product to report a gas leak in the vicinity of the leak.

"CAUTION - To reduce the risk of fire, use only No. 26 AWG or larger telecommunication line cord."

IMPORTANTES MESURES DE SÉCURITÉ

CONSERVER CES INSTRUCTIONS

Certaines mesures de sécurité doivent être prises pendant l'utilisation de matérial téléphonique afin de réduire les risques d'incendie, de choc électrique et de blessures.

En voice quelquesunes :

1. Ne pas utiliser l'appareil près de l'eau, p.ex., près d'une baignoire, d'un lavabo, d'un évier de cuisine, d'un bac à laver, dans un sous-sol humide ou près d'une piscine.
2. Éviter d'utiliser l'appareil pendant un orage électrique. Ceci peut présenter un risque de choc électrique causé par la foudre.
3. Ne pas utiliser l'appareil pour signaler une fuite de gaz s'il est situé près de la fuite.

"ATTENTION - Pour réduire les risques d'incendie, utiliser uniquement des conducteurs de télécommunications 26 AWG au de section supérleure."

Users in the U.S.A.

FCC Notice (U.S.A. Only)
For 120V, 60Hz model
Model Number: K10584 (Contains FCC Approved WLAN Module K30387)

This device complies with Part 15 of the FCC Rules. Operation is subject to the following two conditions: (1) This device may not cause harmful interference, and (2) this device must accept any interference received, including interference that may cause undesired operation.

Note: This equipment has been tested and found to comply with the limits for a Class B digital device, pursuant to Part 15 of the FCC Rules. These limits are designed to provide reasonable protection against harmful interference in a residential installation. This equipment generates, uses and can radiate radio frequency energy and, if not installed and used in accordance with the instructions, may cause harmful interference to radio communications.
However, there is no guarantee that interference will not occur in a particular installation. If this equipment does cause harmful interference to radio or television reception, which can be determined by turning the

equipment off and on, the user is encouraged to try to correct the interference by one or more of the following measures:

- Reorient or relocate the receiving antenna.
- Increase the separation between the equipment and receiver.
- Connect the equipment into an outlet on a circuit different from that to which the receiver is connected.
- Consult the dealer or an experienced radio/TV technician for help.

Use of a shielded cable is required to comply with Class B limits in Subpart B of Part 15 of the FCC Rules.

Do not make any changes or modifications to the equipment unless otherwise specified in the manual. If such changes or modifications should be made, you could be required to stop operation of the equipment.

Changes or modifications not expressly approved by the party responsible for compliance could void the user's authority to operate equipment.

This transmitter must not be co-located or operating in conjunction with any other antenna or transmitter.

This equipment complies with FCC radiation exposure limits set forth for an uncontrolled environment and meets the FCC radio frequency (RF) Exposure Guidelines as this equipment has very low levels of RF energy. But it is desirable that it should be installed and operated keeping the radiator at least 20cm or more away from person's body.

Canon U.S.A., Inc.
One Canon Park
Melville, New York 11747
1-800-652-2666

Users in Europe

Product Information for the requirement of COMMISSION REGULATION (EU)

The power consumption in Off Mode or network standby and the transition time to Off or network standby are as follows:
https://www.canon-europe.com/consumer/lot26/

Interference

Do not use the printer around medical equipment or other electronic devices. Signals from the printer may interfere with the correct operation of these devices.

Pre-Installation Requirements

Order Information

When ordering service from the telephone company for this equipment, the following may be required.

Universal Service Order Code (USOC): RJ11C

The Facility Interface Code (FIC): 02LS2

Service Order Code (SOC): 9.0F

Connection of the Equipment

This equipment complies with Part 68 of the FCC rules and the requirements adopted by the ACTA.

A label on this equipment contains, among other information, a product identifier in the format US:AAAEQ##TXXXX. If requested, this number must be provided to the telephone company.

The REN is used to determine the number of devices that may be connected to a telephone line.

Excessive RENs on a telephone line may result in the devices not ringing in response to an incoming call. In most but not all areas, the sum of RENs should not exceed five (5.0). To be certain of the number of devices that may be connected to a line, as determined by the total RENs, contact the local telephone company. The REN for this product is part of the product identifier that has the format US:AAAEQ##TXXXX. The digits represented by ## are the REN without a decimal point (e.g., 03 is a REN of 0.3).

A plug and jack used to connect this equipment to the premises wiring and telephone network must comply with the applicable FCC Part 68 rules and requirements adopted by the ACTA. A compliant telephone cord and modular plug is provided with this product. It is designed to be connected to a compatible modular jack that is also compliant. See installation instructions for details.

Connection to party lines is subjected to state tariffs. Contact the state public utility commission, public service commission or corporation commission for information.

If your home has specially wired alarm equipment connected to the telephone line, ensure the installation of this equipment does not disable your alarm equipment. If you have questions about what will disable alarm equipment, consult your telephone company or a qualified installer.

In Case of Equipment Malfunction

Should any malfunction occur which cannot be corrected by the procedures described in the Online Manual, disconnect the equipment from the telephone line cable, turn off the power and disconnect the power cord. The telephone line cable should not be reconnected or the main power switch turned ON until the problem is completely resolved. Users should contact their local authorized Canon Facsimile Service Dealer for the servicing of equipment.

Information regarding Authorized Service Facility locations can be obtained by calling the Canon Customer Center.

Rights of the Telephone Company

If this equipment causes harm to the telephone network, the telephone company may temporarily disconnect service. The telephone company also retains the right to make changes in facilities and services that may affect the operation of this equipment. When such changes are necessary, the telephone company is required to give adequate prior notice to the user. However, if advance notice is not possible, the telephone company will notify the customer as soon as possible. Also, the customer will be advised of his/her right to file a compliant with the FCC if he/she believes it is necessary.

Warning

The Telephone Consumer Protection Act of 1991 makes it unlawful for any person to use a computer or other electronic device to send any message via a telephone FAX machine unless such message clearly contains in a margin at the top or bottom of each transmitted page, or on the first page of the

transmission, the date and time it is sent and an identification of the business or other entity, or other individual sending the message and the telephone number of the sending machine or such business, other entity, or individual.

In order to program this information into your FAX machine, you should complete the procedure to register your name, unit's telephone number, time, and date. Refer to the Online Manual.

WEEE

Only for the United Kingdom

These symbols indicate that this product is not to be disposed of with your household waste, according to the UK Waste Electrical and Electronic Equipment Regulations and the UK Batteries and Accumulators Regulations. If a chemical symbol is printed beneath the symbol shown above, in accordance with the UK Batteries and Accumulators Regulations, this indicates that a heavy metal (Hg = Mercury, Cd = Cadmium, Pb = Lead) is present in this battery or accumulator at a concentration above an applicable threshold specified in the UK Batteries and Accumulators Regulations. This product should be handed over to a designated collection point, e.g., on an authorized one-for-one basis when you buy a new similar product or to an authorized collection site for recycling waste electrical and electronic equipment (EEE) and batteries and accumulators. Improper handling of this type of waste could have a possible impact on the environment and human health due to potentially hazardous substances that are generally associated with EEE. Your cooperation in the correct disposal of this product will contribute to the effective usage of natural resources. For more information about the recycling of this product, please contact your local city office, waste authority, approved scheme or your household waste disposal service or visit www.canon-europe.com/sustainability/approach/.

Only for European Union and EEA (Norway, Iceland and Liechtenstein)

These symbols indicate that this product is not to be disposed of with your household waste, according to the WEEE Directive (2012/19/EU), the Battery Regulation ((EU) 2023/1542) and/or national legislations implementing those Directive and Regulation.
If a chemical symbol is printed beneath the symbol shown above, in accordance with the Battery Regulation, this indicates that a heavy metal (Pb = Lead) is present in this battery at a concentration above an applicable threshold specified in the Battery Regulation.
This product should be handed over to a designated collection point, e.g., on an authorized one-for-one basis when you buy a new similar product or to an authorized collection site for recycling waste electrical and electronic equipment (EEE) and batteries. Improper handling of this type of waste could have a possible impact on the environment and human health due to potentially hazardous substances that are generally associated with EEE. Your cooperation in the correct disposal of this product will contribute to the effective usage of natural resources.
For more information about the recycling of this product, please contact your local city office, waste authority, approved scheme or your household waste disposal service or visit www.canon-europe.com/sustainability/approach/.

Nur für die Europäische Union und EWR (Norwegen, Island und Liechtenstein)

Diese Symbole weisen darauf hin, dass dieses Produkt gemäß WEEE-Richtlinie (2012/19/EU) (Richtlinie über Elektro- und Elektronik-Altgeräte), Batterienverordnung (EU) 2023/1542 und nationalen Gesetzen zur Umsetzung dieser Richtlinie und Verordnung nicht über den Hausmüll entsorgt werden darf.
Falls sich unter dem oben abgebildeten Symbol ein chemisches Symbol befindet, bedeutet dies gemäß der Batterieverordnung, dass in dieser Batterie ein Schwermetall (Pb = Blei) in einer Konzentration vorhanden ist, die über einem in der Verordnung angegebenen Grenzwert liegt.
Dieses Produkt muss bei einer dafür vorgesehenen Sammelstelle abgegeben werden. Dies kann z. B. durch Rückgabe beim Kauf eines neuen ähnlichen Produkts oder durch Abgabe bei einer autorisierten Sammelstelle für die Wiederaufbereitung von Elektro- und Elektronik-Altgeräten sowie Batterien geschehen. Der unsachgemäße Umgang mit Altgeräten kann aufgrund potenziell gefährlicher Stoffe, die generell mit Elektro- und Elektronik-Altgeräten in Verbindung stehen, negative Auswirkungen auf die Umwelt und die menschliche Gesundheit haben.
Durch Ihre Mitarbeit bei der umweltgerechten Entsorgung dieses Produkts tragen Sie zu einer effektiven Nutzung natürlicher Ressourcen bei.
Um weitere Informationen über die Wiederverwertung dieses Produkts zu erhalten, wenden Sie sich an Ihre Stadtverwaltung, den öffentlich-rechtlichen Entsorgungsträger, eine autorisierte Stelle für die Entsorgung von Elektro- und Elektronik-Altgeräten oder Ihr örtliches Entsorgungsunternehmen oder besuchen Sie
www.canon-europe.com/sustainability/approach/.

Zusatzinformationen für Deutschland:

Dieses Produkt kann durch Rückgabe an den Händler, unter den in der Verordnung des Elektro- und Elektronikgerätegesetzes beschriebenen Bedingungen abgegeben werden.
Als Endbenutzer und Besitzer von Elektro- oder Elektronikgeräten sind Sie verpflichtet:

- diese einer vom unsortierten Siedlungsabfall getrennten Erfassung zuzuführen,
- Altbatterien und Altakkumulatoren, die nicht von Altgerät umschlossen sind, sowie Lampen, die zerstörungsfrei aus dem Altgerät entnommen werden können, vor der Abgabe an einer Erfassungsstelle vom Altgerät zerstörungsfrei zu trennen,
- personenbezogene Daten auf den Altgeräten vor der Entsorgung zu löschen.

Die Bedeutung des Symbols der durchgestrichenen Abfalltonne auf Rädern finden Sie oben in dieser Beschreibung.
Die Vertreiber von Elektro- oder Elektronikgeräten haben die Pflicht zur unentgeltlichen Rücknahme von Altgeräten. Die Vertreiber haben die Endnutzer über die von ihnen geschaffenen Möglichkeiten der Rückgabe von Altgeräten zu informieren.

Union Européenne, Norvège, Islande et Liechtenstein uniquement.

Ces symboles indiquent que ce produit ne doit pas être mis au rebut avec les ordures ménagères, comme le spécifient la Directive européenne DEEE (2012/19/UE), la législation européenne relative à l'élimination des piles usagés ((EU) 2023/1542) et les lois en vigueur dans votre pays appliquant ces directives et législations.
Si un symbole de toxicité chimique est imprimé sous le symbole illustré ci-dessus conformément à la législation relative aux piles, il indique la présence d'un métal lourd (Pb = plomb) dans la pile à une concentration supérieure au seuil applicable spécifié par la législation.
Ce produit doit être confié au distributeur à chaque fois que vous achetez un produit neuf similaire, ou à un point de collecte mis en place par les collectivités locales pour le recyclage des Déchets des Équipements Électriques et Électroniques (DEEE) et piles. Le traitement inapproprié de ce type de déchet risque d'avoir des répercussions sur l'environnement et la santé humaine, du fait de la présence de substances potentiellement dangereuses généralement associées aux équipements électriques et électroniques.
Votre entière coopération dans le cadre de la mise au rebut correcte de ce produit favorisera une meilleure utilisation des ressources naturelles.
Pour plus d'informations sur le recyclage de ce produit, contactez vos services municipaux, votre éco-organisme ou les autorités locales compétentes, ou consultez le site www.canon-europe.com/sustainability/approach/.

Uitsluitend bestemd voor de Europese Unie en EER (Noorwegen, IJsland en Liechtenstein)

Met deze symbolen wordt aangegeven dat dit product in overeenstemming met de AEEA-richtlijn (2012/19/EU), de wetgeving ((EU) 2023/1542) betreffende batterijen en/of de plaatselijk geldende wetgevingen waarin deze richtlijnen en wetgevingen zijn geïmplementeerd, niet bij het normale huisvuil mag worden weggegooid.
Indien onder het hierboven getoonde symbool een chemisch symbool gedrukt staat, geeft dit in overeenstemming met de wetgeving betreffende batterijen aan dat deze batterij een zwaar metaal bevat (Pb = lood) waarvan de concentratie de toepasselijke drempelwaarde in overeenstemming met de genoemde richtlijn overschrijdt.
Dit product dient te worden ingeleverd bij een hiervoor aangewezen inzamelpunt, bijv. door dit in te leveren bij een hiertoe erkend verkooppunt bij aankoop van een gelijksoortig product, of bij een officiële inzameldienst voor de recycling van elektrische en elektronische apparatuur (EEA) en batterijen. Door de potentieel gevaarlijke stoffen die gewoonlijk gepaard gaan met EEA, kan onjuiste verwerking van dit type afval mogelijk nadelige gevolgen hebben voor het milieu en de menselijke gezondheid. Uw medewerking bij het op juiste wijze weggooien van dit product draagt bij tot effectief gebruik van natuurlijke hulpbronnen.
Voor verdere informatie over recycling van dit product kunt u contact opnemen met uw plaatselijke

gemeente, afvaldienst, officiële dienst voor klein chemisch afval of afvalstortplaats, of kunt u terecht op www.canon-europe.com/sustainability/approach/

Sólo para la Unión Europea y el Área Económica Europea (Noruega, Islandia y Liechtenstein)

Estos iconos indican que este producto no debe desecharse con los residuos domésticos de acuerdo con la Directiva sobre RAEE (2012/19/UE) y el Reglamento (UE) 2023/1542 relativo a las pilas y baterías y sus residuos y/o la legislación nacional que transponen e implementan dicha.
Si aparece un símbolo químico bajo este icono, de acuerdo con el Reglamento sobre Pilas y baterías, significa que la pila contiene metales pesados (Pb = Plomo) en una concentración superior al límite especificado en dicho Reglamento.
Este producto deberá entregarse en un punto de recogida designado, por ejemplo, entregándolo en el lugar de venta al adquirir un producto nuevo similar o en un centro autorizado para la recogida de residuos de aparatos eléctricos y electrónicos (RAEE) y baterías. La gestión incorrecta de este tipo de residuos puede afectar al medio ambiente y a la salud humana debido a las sustancias potencialmente nocivas que suelen contener estos aparatos.
Su cooperación en la correcta eliminación de este producto contribuirá al correcto aprovechamiento de los recursos naturales.
Los usuarios tienen derecho a devolver pilas o baterías usadas sin coste alguno. El precio de venta de pilas y baterías incluye el coste de la gestión medioambiental de su desecho, no reflejándose la cuantía de dicho coste en la factura suministradas a los usuarios finales.
Si desea más información sobre el reciclado de este producto, póngase en contacto con su municipio, el servicio o el organismo encargado de la gestión de residuos domésticos o visite www.canon-europe.com/sustainability/approach/.

Solo per Unione Europea e SEE (Norvegia, Islanda e Liechtenstein)

Questi simboli indicano che il prodotto non può essere smaltito con i rifiuti domestici, ai sensi della Direttiva RAEE (2012/19/UE), del Regolamentola sulle Batterie ((UE) 2023/1542) e/o delle leggi nazionali che attuano tale Direttiva e Regolamento.
Se sotto il simbolo indicato sopra è riportato un simbolo chimico, in osservanza del Regolamento sulle Batterie, tale simbolo indica la presenza di un metallo pesante (Pb = Piombo) nella batteria con un livello di concentrazione superiore a una soglia applicabile specificata nel Regolamento sulle Batterie.
Il prodotto deve essere conferito a un punto di raccolta designato, ad esempio il rivenditore in caso di acquisto di un nuovo prodotto simile oppure un centro di raccolta autorizzato per il riciclaggio di rifiuti di apparecchiature elettriche ed elettroniche (RAEE) nonché di batterie. Un trattamento improprio di questo tipo di rifiuti può avere conseguenze negative sull'ambiente e sulla salute umana a causa delle sostanze potenzialmente nocive solitamente contenute in tali rifiuti.
La collaborazione dell'utente per il corretto smaltimento di questo prodotto contribuirà a un utilizzo efficace

delle risorse naturali.
Per ulteriori informazioni sul riciclaggio di questo prodotto, vogliate contattare il vostro ufficio comunale, le autorità competenti, un sistema di raccolta rifiuti autorizzato, o il vostro servizio di raccolta dei rifiuti domestici, oppure visitare il sito
www.canon-europe.com/sustainability/approach/.

Apenas para a União Europeia e Espaço Económico Europeu (Noruega, Islândia e Liechtenstein)

Estes símbolos indicam que este produto não deve ser descartado juntamente com os resíduos urbanos, segundo a Diretiva REEE - Diretiva 2012/19/UE, segundo o Regulamento Baterias - Regulamento (UE) 2023/1542 e/ou a legislação nacional que transpõe esta Diretiva e Regulamento.
Caso esteja marcado um símbolo químico abaixo do símbolo mostrado acima, de acordo com o Regulamento Baterias, isso significa que está presente nesta bateria um metal pesado (Pb = Chumbo) numa concentração acima do respetivo limite especificado no Regulamento.
Este produto deve ser entregue num ponto de recolha designado, por exemplo num local de receção autorizado quando compra um equipamento novo idêntico, ou num local de recolha autorizado para reciclar residuos de equipamento elétrico e eletrónico (EEE) e de baterias. O tratamento inadequado deste tipo de resíduos pode ter um impacto negativo no ambiente e na saúde humana, devido a substâncias potencialmente perigosas que estão geralmente associadas aos EEE.
A sua cooperação no descarte adequado deste produto irá contribuir para a utilização mais eficaz dos recursos naturais.
Para saber mais sobre como reciclar este produto, por favor contacte a divisão de resíduos dos serviços municipais ou entidades gestoras autorizadas para a gestão destes fluxos de resíduos ou visite www.canon-europe.com/sustainability/approach/.

Gælder kun i Europæiske Union og EØS (Norge, Island og Liechtenstein)

Disse symboler betyder, at produktet ikke må bortskaffes sammen med dagrenovation i henhold til WEEE-direktivet (2012/19/EU), batteriforordningen ((EU) 2023/1542) og/eller de lokale lovgivninger, som disse direktiver og forordninger er gennemført i.
Hvis der i overensstemmelse med batteriforordningen er trykt et kemisk symbol under det symbol, der er vist ovenfor, betyder det, at batteriet indeholder tungmetal (Pb = bly) i en koncentration, som ligger over de grænseværdier, der er beskrevet i batteriforordningen.
Produktet skal afleveres på et godkendt indsamlingssted, f.eks. i overensstemmelse med en godkendt én-til-én-procedure, når du indkøber et nyt tilsvarende produkt, eller på et godkendt indsamlingssted for elektronikaffald og batterier. Forkert håndtering af denne type affald kan medføre negative konsekvenser for miljøet og menneskers helbred på grund af de potentielt sundhedsskadelige stoffer, der generelt kan forefindes i elektrisk og elektronisk udstyr.

Når du foretager korrekt bortskaffelse af produktet, bidrager du til effektiv brug af naturressourcerne. Kontakt din kommune, den lokale affaldsmyndighed, det lokale affaldsanlæg, eller besøg www.canon-europe.com/sustainability/approach/ for at få flere oplysninger om genbrug af dette produkt.

Μόνο για την Ευρωπαϊκή Ένωση και τον ΕΟΧ (Νορβηγία, Ισλανδία και Λιχτενστάιν)

Αυτά τα σύμβολα υποδεικνύουν ότι αυτό το προϊόν δεν πρέπει να απορρίπτεται μαζί με τα οικιακά απορρίμματα, σύμφωνα με την Οδηγία για τα Απόβλητα Ηλεκτρικού και Ηλεκτρονικού Εξοπλισμού (ΑΗΗΕ) (2012/19/ΕΕ), την τον Κανονισμό για τις Μπαταρίες ((ΕΕ) 2023/1542) ή/και τις εθνικές νομοθεσίες που εφαρμόζει τις εν λόγω Οδηγίες και Κανονισμούς.
Εάν κάποιο χημικό σύμβολο είναι τυπωμένο κάτω από το σύμβολο που φαίνεται παραπάνω, σύμφωνα με τον Κανονισμό για τις Μπαταρίες, υποδηλώνει ότι κάποιο βαρύ μέταλλο (Pb = Μόλυβδος) υπάρχει στην μπαταρία σε συγκέντρωση μεγαλύτερη από το ισχύον επίπεδο που καθορίζεται στον Κανονισμό για τις Μπαταρίες.
Αυτό το προϊόν πρέπει να παραδίδεται σε καθορισμένο σημείο συλλογής, π.χ. σε μια εξουσιοδοτημένη βάση ανταλλαγής όταν αγοράζετε ένα νέο παρόμοιο προϊόν ή σε μια εξουσιοδοτημένη θέση συλλογής για την ανακύκλωση των αποβλήτων ηλεκτρικού και ηλεκτρονικού εξοπλισμού (ΗΗΕ) και των μπαταριών. Ο ακατάλληλος χειρισμός αυτού του τύπου αποβλήτων μπορεί να έχει αρνητικό αντίκτυπο στο περιβάλλον και την υγεία του ανθρώπου, λόγω δυνητικά επικίνδυνων ουσιών που γενικά συνδέονται με τον ΗΗΕ.
Η συνεργασία σας για τη σωστή απόρριψη αυτού του προϊόντος θα συμβάλει στην αποτελεσματική χρήση των φυσικών πόρων. Για περισσότερες πληροφορίες σχετικά με ανακύκλωση αυτού του προϊόντος, επικοινωνήστε με το τοπικό γραφείο της πόλης σας, την υπηρεσία απορριμμάτων, το εγκεκριμένο σχήμα ή την υπηρεσία απόρριψης οικιακών αποβλήτων ή επισκεφθείτε τη διεύθυνση https://www.canon-europe.com/sustainability/approach/ .

Gjelder kun den europeiske union og EØS (Norge, Island og Liechtenstein)

Disse symbolene indikerer at dette produktet ikke skal kastes sammen med husholdningsavfall, i henhold til WEEE-direktivet (2012/19/EU), batteri-forordning EU 2023/1542 og/eller nasjonal lov som har implementert disse direktivene og forordninger.
Hvis et kjemisk symbol vises under symbolet vist ovenfor, i samsvar med batteri-forordning EU 2023/1542, indikerer dette at et tungmetall (Pb = bly) finnes i batteriet i en konsentrasjon over en gjeldende øvre grense som er spesifisert i batteri-forordning EU 2023/1542.
Produktet må leveres til et dertil egnet innsamlingspunkt, det vil si på en autorisert en-til-en-basis når en kjøper et nytt lignende produkt, eller til et autorisert innsamlingssted for resirkulering av avfall fra elektrisk og elektronisk utstyr (EE-utstyr) og batterier. Feil håndtering av denne typen avfall kan være miljø- og helseskadelig på grunn av potensielt skadelige stoffer som ofte brukes i EE-utstyr.
Din innsats for korrekt avhending av produktet vil bidra til effektiv bruk av naturressurser.

Du kan få mer informasjon om resirkulering av dette produktet ved å kontakte lokale myndigheter, avfallsadministrasjonen, et godkjent program eller husholdningens renovasjonsselskap, eller gå til www.canon-europe.com/sustainability/approach/ .

Vain Euroopan unionin sekä ETA:n (Norja, Islanti ja Liechtenstein) alueelle.

Nämä tunnukset osoittavat, että sähkö- ja elektroniikkalaiteromua koskeva direktiivi (SER-direktiivi, 2012/19/EU), paristoasetus ((EU) 2023/1542) sekä kansallinen lainsäädäntö kieltävät tuotteen hävittämisen talousjätteen mukana. Jos yllä olevan symbolin alapuolelle on paristoasetuksen mukaisesti painettu kemiallisen aineen tunnus, kyseinen paristo sisältää raskasmetalleja (Pb = lyijy) enemmän kuin paristoasetuksen salliman määrän.
Tuote on vietävä asianmukaiseen keräyspisteeseen, esimerkiksi kodinkoneliikkeeseen uutta vastaavaa tuotetta ostettaessa tai viralliseen sähkö- ja elektroniikkalaiteromun tai paristojen keräyspisteeseen. Sähkö- ja elektroniikkalaiteromun virheellinen käsittely voi vahingoittaa ympäristöä ja ihmisten terveyttä, koska laitteet saattavat sisältää ympäristölle ja terveydelle haitallisia aineita. Tuotteen asianmukainen hävittäminen säästää myös luonnonvaroja.
Jos haluat lisätietoja tämän tuotteen kierrätyksestä, ota yhteys kunnan jätehuoltoviranomaisiin tai käyttämääsi jätehuoltoyhtiöön tai käy osoitteessa www.canon-europe.com/sustainability/approach/.

Endast för Europeiska unionen och EES (Norge, Island och Liechtenstein)

De här symbolerna visar att produkten inte får sorteras och slängas som hushållsavfall enligt WEEE-direktivet (2012/19/EU), batteriförordningen ((EU) 2023/1542) och/eller nationell lagstiftning som implementerar dessa direktiv och förordningar.
Om en kemisk symbol förekommer under ovanstående symbol innebär detta enligt batteriförordningen att en tungmetall (Pb = Bly) förekommer i batteriet med en koncentration som överstiger tillämplig gräns som anges i batteriförordningen.
Produkten ska lämnas in på en avsedd insamlingsplats, t.ex. på en återvinningsstation auktoriserad att hantera elektrisk och elektronisk utrustning (EE-utrustning) samt batterier eller hos handlare som är auktoriserade att byta in varor då nya, motsvarande köps (en mot en). Olämplig hantering av avfall av den här typen kan ha negativ inverkan på miljön och människors hälsa på grund av de potentiellt farliga ämnen som kan återfinnas i elektrisk och elektronisk utrustning.
Din medverkan till en korrekt avfallshantering av produkten bidrar till effektiv användning av naturresurserna.
Om du vill ha mer information om var du kan lämna in den här produkten, kontakta ditt lokala kommunkontor, berörd myndighet eller företag för avfallshantering eller se www.canon-europe.com/sustainability/approach/.

Pouze Evropská unie a EHP (Norsko, Island a Lichtenštejnsko)

Tento symbol znamená, že podle směrnice OEEZ (2012/19/EU), nařízení o bateriích (2023/1542) a/nebo podle vnitrostátních právních prováděcích předpisů k této směrnici a nařízení nemá být tento výrobek likvidován s odpadem z domácností.
Je li v souladu s požadavky nařízení o bateriích vytištěna pod výše uvedeným symbolem chemická značka, udává, že tato baterie obsahuje těžké kovy (Pb = olovo) v koncentraci vyšší, než je příslušná hodnota předepsaná nařízením.
Tento výrobek má být vrácen do určeného sběrného místa, např. v rámci autorizovaného systému odběru jednoho výrobku za jeden nově prodaný podobný výrobek, nebo do autorizovaného sběrného místa pro recyklaci odpadních elektrických a elektronických zařízení (OEEZ), baterií. Nevhodné nakládání s tímto druhem odpadu by mohlo mít negativní dopad na životní prostředí a lidské zdraví, protože elektrická a elektronická zařízení zpravidla obsahují potenciálně nebezpečné látky. Vaše spolupráce na správné likvidaci tohoto výrobku napomůže efektivnímu využívání přírodních zdrojů.
Chcete li získat podrobné informace týkající se recyklace tohoto výrobku, obraťte se prosím na místní úřad, orgán pro nakládání s odpady, schválený systém nakládání s odpady či společnost zajišťující likvidaci domovního odpadu, nebo navštivte webové stránky
www.canon-europe.com/sustainability/approach/

Csak az Európai Unió és az EGT (Norvégia, Izland és Liechtenstein) országaiban

Ezek a szimbólumok azt jelzik, hogy a termék hulladékkezelése a háztartási hulladéktól különválasztva, az elektromos és elektronikus berendezések hulladékairól (WEEE) szóló (2012/19/EU) irányelvnek és az elemekről,valamint a hulladék elemekről szóló ((EU) 2023/1542) rendeletnek megfelelően és/vagy ezen irányelveknek megfelelő helyi előírások szerint történik.
Amennyiben a fent feltüntetett szimbólum alatt egy vegyjel is szerepel, az elemekről szóló rendeletben foglaltak értelmében ez azt jelzi, hogy az elem a rendeletben meghatározott határértéknél nagyobb mennyiségben tartalmaz nehézfémet (Pb = ólom).
E terméket az arra kijelölt gyűjtőhelyre kell juttatni – pl. hasonló termék vásárlásakor a régi becserélésére vonatkozó hivatalos program keretében, vagy az elektromos és elektronikus berendezések (EEE) hulladékainak gyűjtésére, valamint a hulladék elemek gyűjtésére kijelölt hivatalos gyűjtőhelyre. Az ilyen jellegű hulladékok nem előírásszerű kezelése az elektromos és elektronikus berendezésekhez (EEE) általánosan kapcsolható potenciálisan veszélyes anyagok révén hatással lehet a környezetre és az egészségre.
E termék megfelelő leselejtezésével Ön is hozzájárul a természeti források hatékony használatához.
A termék újrahasznosítását illetően informálódjon a helyi polgármesteri hivatalnál, a helyi közterület-fenntartó vállalatnál, a hivatalos hulladéklerakó telephelyen vagy a háztartási hulladék begyűjtését végző szolgáltatónál, illetve látogasson el a
www.canon-europe.com/sustainability/approach/ internetes oldalra.

Tylko dla krajów Unii Europejskiej oraz EOG (Norwegia, Islandia i Liechtenstein)

Te symbole oznaczają, że produktu nie należy wyrzucać razem z odpadami gospodarstwa domowego, zgodnie z Dyrektywą WEEE w sprawie zużytego sprzętu elektrycznego i elektronicznego (2012/19/UE), Rozporządzeniem Parlamentu Europejskiego i Rady 2023/1542 w sprawie baterii i/lub przepisami krajowymi wdrażającymi tę dyrektywę i rozporządzenie.
Jeśli pod powyższym symbolem znajduje się symbol chemiczny, zgodnie z Rozporzadzeniem w sprawie baterii oznacza to, że bateria zawiera metal ciężki (Pb = ołów) w stężeniu przekraczającym odpowiedni poziom określony w Rozporzadzeniu.
Użytkownicy baterii mają obowiązek korzystać z dostępnego programu zwrotu, recyklingu, odzysku i bezpiecznego unieszkodliwienia baterii, np. na zasadzie oddania „jeden za jeden” przy zakupie nowego, podobnego produktu.
Niewłaściwe postępowanie z tego typu odpadami może mieć wpływ na środowisko i zdrowie ludzi ze względu na substancje potencjalnie niebezpieczne, które są zazwyczaj związane ze zużytym sprzętem elektrycznym i elektronicznym.
Państwa współpraca w zakresie właściwego zagospodarowania tego produktu przyczyni się do efektywnego wykorzystania zasobów naturalnych.
W celu uzyskania informacji o sposobie recyklingu tego produktu prosimy o kontakt z właściwym urzędem miejskim lub zakładem gospodarki komunalnej bądź zapraszamy na stronę www.canon-europe.com/sustainability/approach/ .

Platí len pre štáty Európskej únie a EHP (Nórsko, Island a Lichtenštajnsko)

Tieto symboly označujú, že podľa Smernice o odpade z elektrických a elektronických zariadení (OEEZ) 2012/19/EÚ, Nariadenia Európskeho parlamentu a Rady (EU) 2023/1542 o batériách a odpadových batériách, a podľa platnej legislatívy Slovenskej republiky implementujúcej túto smernicu a nariadenie sa tento výrobok nesmie likvidovať spolu s komunálnym odpadom.
Ak je v súlade s požiadavkami nariadenia chemická značka vytlačená pod vyššie uvedeným symbolom, znamená to, že táto batéria obsahuje ťažké kovy (Pb = olovo) v koncentrácii vyššej, ako je príslušná povolená hodnota stanovená v nariadení.
Výrobok je potrebné odovzdať do určeného zberného miesta, napr. prostredníctvom výmeny za kúpu nového podobného výrobku, alebo na autorizované zberné miesto, ktoré recykluje odpad z elektrických a elektronických zariadení (EEZ) a batérií. Nesprávna manipulácia s takýmto typom odpadu môže mať negatívny vplyv na životné prostredie a ľudské zdravie, pretože elektrické a elektronické zariadenia obsahujú potenciálne nebezpečné látky.
Spoluprácou na správnej likvidácii tohto výrobku prispejete k účinnému využívaniu prírodných zdrojov. Ďalšie informácie o recyklácii tohto výrobku získate od miestneho/obecného úradu, okresného úradu odboru životného prostredia, zo schváleného systému nakladania s odpadmi alebo od spoločnosti, ktorá

zabezpečuje zber a likvidáciu komunálneho odpadu. Viac informácií nájdete aj na webovej stránke: www.canon-europe.com/sustainability/approach/ .

Ainult Euroopa Liidu ja EMP (Norra, Island ja Liechtenstein) puhul.

Need sümbolid näitavad, et vastavalt elektroonikaromude direktiivile (2012/19/EL), patareide määrusele ((EL) 2023/1542) ja/või siseriiklikele õigusaktidele, millega neid direktiive ja määrusi rakendatakse, ei tohi seda toodet kõrvaldada koos olmejäätmetega.
Kui ülaltoodud sümboli alla on trükitud see keemiline sümbol, tähendab see vastavalt patareieeskirjale, et selles patareis ületab raskemetalli (Pb = plii) kontsentratsioon patareieeskirjas sätestatud kohaldatavat piirmäära.
See toode tuleb anda selleks ettenähtud kogumispunkti, nt üks ühele põhimõttel uue sarnase toote ostmisel või elektri- ja elektroonikaseadmete ning patareide ringlussevõtuks volitatud kogumispunkti.
Seda tüüpi jäätmete ebaõige käitlemine võib potentsiaalselt ohtlike ainete tõttu, mis on üldiselt seotud elektri- ja elektroonikaseadmetega,mõjutada keskkonda ja inimeste tervist . Teie koostöö selle toote õigel kõrvaldamisel aitab kaasa loodusvarade tõhusale kasutamisele.
Lisateavet selle toote ringlussevõtu kohta saate oma kohalikult omavalitsuselt, jäätmekäitlusasutuselt, heakskiidetud süsteemilt või oma kodumajapidamisele jäätmekäitlusteenuse osutajalt või külastades veebilehte
www.canon-europe.com/sustainability/approach/.

Attiecas tikai uz Eiropas Savienību un EEZ (Norvēģija, Islande un Lihtenšteina)

Šie simboli norāda, ka saskaņā ar EEIA direktīvu (2012/19/ES), Bateriju regulu ((ES) 2023/1542) un/vai valsts tiesību aktiem, ar kuriem īsteno šo direktīvu un regulu, šo izstrādājumu nedrīkst izmest kopā ar sadzīves atkritumiem.
Ja zem iepriekš norādītā simbola ir uzdrukāts ķīmiskais simbols saskaņā ar Bateriju regulu, tas norāda, ka šajā baterijā ir smags metāls (Pb = svins), kura koncentrācija pārsniedz piemērojamo robežvērtību, kas noteikta Bateriju regulā.
Šis izstrādājums ir jānodod noteiktā savākšanas vietā, piemēram, saskaņā ar apstiprinātu principu "viens par vienu", kad iegādājaties jaunu līdzīgu izstrādājumu, vai autorizētā elektrisko un elektronisko iekārtu (EEI) un bateriju atkritumu savākšanas vietā. Nepareiza rīcība ar šāda veida atkritumiem var ietekmēt vidi un cilvēku veselību, jo EEI parasti ir saistītas ar potenciāli bīstamām vielām. Jūsu sadarbība, pareizi utilizējot šo produktu, veicinās efektīvu dabas resursu izmantošanu.
Lai iegūtu vairāk informācijas par šī izstrādājuma pārstrādi, sazinieties ar vietējo pilsētas pārvaldi, atkritumu apsaimniekošanas iestādi, apstiprinātu shēmu vai sadzīves atkritumu apglabāšanas dienestu, vai apmeklējiet tīmekļa vietni:
www.canon-europe.com/sustainability/approach/.

Tik Europos Sąjungoje ir EEE (Norvegijoje, Islandijoje ir Lichtenšteine)

Šie simboliai rodo, kad šio gaminio negalima išmesti kartu su buitinėmis atliekomis pagal EEĮ atliekų direktyvą (2012/19/ES), baterijų reglamentą ((ES) 2023/1542) ir (arba) nacionalinius teisės aktus, kuriais įgyvendinama ši direktyva ir reglamentas.
Jei po pirmiau nurodytu simboliu išspausdintas cheminis simbolis pagal baterijų reglamentą, tai reiškia, kad šioje baterijoje yra sunkiųjų metalų (Pb = švino), kurių koncentracija viršija taikomą ribinę vertę, nurodytą baterijų reglamente.
Šį gaminį reikia atiduoti į paskirtą surinkimo punktą, pvz., vadovaujantis principu „vienas už vieną“, kai perkate naują panašų gaminį, arba į įgaliotą elektros ir elektroninės įrangos (EEĮ) ir baterijų atliekų surinkimo vietą. Netinkamas šios rūšies atliekų tvarkymas gali turėti įtakos aplinkai ir žmonių sveikatai dėl potencialiai pavojingų medžiagų, kurios paprastai būna susijusios su EEĮ. Bendradarbiaudami ir teisingai utilizuodami šį gaminį prisidėsite prie efektyvaus gamtos išteklių naudojimo.
Norėdami gauti daugiau informacijos apie šio gaminio perdirbimą, kreipkitės į vietinę miesto įstaigą, atliekų tvarkymo instituciją, patvirtintą programą ar buitinių atliekų šalinimo tarnybą arba apsilankykite adresu
www.canon-europe.com/sustainability/approach/.

Samo za Evropsko unijo in EGP (Norveška, Islandija in Lihtenštajn)

Ti simboli pomenijo, da tega izdelka skladno z Direktivo OEEO (2012/19/EU), uredbo (EU) 2023/1542 in/ali nacionalno zakonodajo, ki uvaja Direktivo in Uredbo, ne smete odlagati z nesortiranimi gospodinjskimi odpadki.
Če je pod zgoraj prikazanim simbolom natisnjen kemijski simbol, to v skladu z Uredbo pomeni, da je v tej bateriji prisotna težka kovina (Pb = svinec), in sicer v koncentraciji, ki je nad relevantno mejno vrednostjo, določeno v Uredbi.
Ta izdelek je potrebno odnesti na izbrano zbirno mesto, t. j. pooblaščeno trgovino, kjer ob nakupu novega (podobnega) izdelka vrnete starega, ali na pooblaščeno zbirno mesto za ponovno uporabo odpadne električne in elektronske opreme (EEO) ter baterij. Neustrezno ravnanje s to vrsto odpadkov lahko negativno vpliva na okolje in človeško zdravje zaradi potencialno nevarnih snovi, ki so pogosto povezane z EEO.
Vaše sodelovanje pri pravilnem odlaganju tega izdelka predstavlja pomemben prispevek k smotrni izrabi naravnih virov.
Za več informacij o ponovni uporabi tega izdelka se obrnite na lokalen mestni urad, pristojno službo za odpadke, predstavnika pooblaščenega programa za obdelavo odpadkov ali na lokalno komunalo. Lahko pa tudi obiščete našo spletno stran
www.canon-europe.com/sustainability/approach/ .

Само за Европейския съюз и ЕИП (Норвегия, Исландия и Лихтенщайн)

Тези символи показват, че този продукт не трябва да се изхвърля заедно с битовите отпадъци съгласно Директивата за ИУЕЕО (2012/19/ЕС), Регламент за батериите ((ЕС) 2023/1542) и/или Вашето национално законодателство, прилагащо тези Директиви.
Ако под показания горе символ е отпечатан символ за химически елемент, съгласно разпоредбите на Регламент за батерии, този втори символ означава наличието на тежък метал (Pb = олово) в батерията в концентрация над указаната граница за съответния елемент в Регламент.
Този продукт трябва да бъде предаден в предназначен за целта пункт за събиране, например на база размяна, когато купувате нов подобен продукт, или в одобрен събирателен пункт за рециклиране на излязло от употреба електрическо и електронно оборудване (ИУЕЕО), батерии.
Неправилното третиране на този тип отпадъци може да доведе до евентуални отрицателни последствия за околната среда и човешкото здраве поради потенциално опасните вещества, които обикновено са свързани с ЕЕО.
В същото време Вашето съдействие за правилното изхвърляне на този продукт ще допринесе за ефективното използване на природните ресурси.
За повече информация относно това къде можете да предадете за рециклиране този продукт, моля свържете се с местните власти, с органа, отговорен за отпадъците, с одобрената система за ИУЕЕО, с Вашата местна служба за битови отпадъци или посетете.
www.canon-europe.com/sustainability/approach/

Doar pentru Uniunea Europeană şi EEA (Norvegia, Islanda şi Liechtenstein)

Aceste simboluri indică faptul că acest produs nu trebuie aruncat împreună cu deşeurile menajere, în conformitate cu Directiva DEEE (2012/19/UE), Regulamentul ((UE) 2023/1542) şi/sau legile dvs. naţionale ce implementează această Directivă şi Regulament.
Dacă un simbol chimic este imprimat sub simbolul de mai sus, în conformitate cu Regulamentul referitor la baterii, acest simbol indică prezenţa în baterie a unui metal greu (Pb = Plumb) într-o concentraţie mai mare decât pragul admis specificat în Regulamentul referitor la baterii.
Acest produs trebuie înmânat punctului de colectare adecvat, ex: printr-un schimb autorizat unu la unu atunci când cumpăraţi un produs nou similar sau la un loc de colectare autorizat pentru reciclarea reziduurilor de echipament electric şi electronic (EEE) şi baterii. Administrarea neadecvată a acestui tip de deşeuri, ar putea avea un impact asupra mediului şi asupra sănătăţii umane datorită substanţelor cu potenţial de risc care sunt în general asociate cu EEE.
Cooperarea dvs. în direcţia reciclării corecte a acestui produs va contribui la o utilizare eficientă a resurselor naturale.
Pentru mai multe informaţii despre reciclarea acestui produs, vă rugăm să contactaţi biroul dvs. local, autorităţile responsabile cu deşeurile, schema aprobată sau serviciul dvs. responsabil cu deşeurile

menajere sau vizitaţi-ne la.
www.canon-europe.com/sustainability/approach/.

Samo za Europsku uniju i EEA (Norveška, Island i Lihtenštajn)

Oznaka pokazuje da se ovaj proizvod ne smije odlagati s komunalnim i ostalim vrstama otpada, u skladu s direktivom WEEE (2012/19/EC), Uredbom o baterijama ((EU) 2023/1542) i/ili nacionalnim zakonodavstvom koje provodi te Direktive i Uredbe.
Ako je ispod prethodno prikazane oznake otisnut kemijski simbol, u skladu s Uredbom o baterijama, to znači da se u ovoj bateriji nalazi teški metal (Pb = olovo) i da je njegova koncentracija iznad razine propisane u Uredbi o baterijama.
Ovaj bi proizvod trebalo predati ovlaštenom skupljaču EE otpada ili prodavatelju koji je dužan preuzeti otpadni proizvod po sistemu jedan za jedan, ako isti odgovara vrsti te je obavljao primarne funkcije kao i isporučena EE oprema. Otpadne baterije predaju se ovlaštenom skupljaču otpadnih baterija ili prodavatelju bez naknade i obveze kupnje za krajnjeg korisnika. Neodgovarajuće rukovanje ovom vrstom otpada može utjecati na okoliš i ljudsko zdravlje zbog potencijalno opasnih supstanci koje se najčešće nalaze na takvim mjestima.
Vaša suradnja u pravilnom zbrinjavanju ovog proizvoda pridonijet će djelotvornom iskorištavanju prirodnih resursa. Dodatne informacije o recikliranju ovog proizvoda zatražite od svog lokalnog gradskog ureda, službe za zbrinjavanje otpada, odobrenog programa ili komunalne službe za uklanjanje otpada ili pak na stranicama
www.canon-europe.com/sustainability/approach/

Handling Precautions

- Canceling Print Jobs
- Legal Restrictions on Scanning/Copying
- Printer Handling Precautions
- Transporting Your Printer
- When Repairing, Lending, or Disposing of the Printer
- Keeping Print Quality High
- Ink Tips

Legal Restrictions on Scanning/Copying

Scanning, printing, copying, or modifying copies of the following may be punishable under law.

This list is non-exhaustive. When in doubt, check with a local legal representative.

- Paper money
- Money orders
- Certificates of deposit
- Postage stamps (canceled or uncanceled)
- Identification badges or insignia
- Selective service or draft papers
- Checks or drafts issued by governmental agencies
- Motor vehicle licenses and certificates of title
- Traveler's checks
- Food stamps
- Passports
- Immigration papers
- Internal revenue stamps (canceled or uncanceled)
- Bonds or other certificates of indebtedness
- Stock certificates
- Copyrighted works or works of art, without the owner's consent

Printer Handling Precautions

Be careful not to let anything get inside the document output slot. It may cause damage.

Transporting Your Printer

When relocating the printer for changing your living place or repairing it, make sure of the following.

Important

- You cannot take ink out of ink tanks.
- Check if the tank cap is completely inserted.
- Prepare for transporting the printer with the print head attached. This allows the printer to automatically cap the print head, thus preventing it from drying.
- Do not remove the print head. Ink may leak.
- If ink stains the inside of the printer, wipe them using a soft cloth dampened with water.
- When transporting the printer, pack the printer in a plastic bag so that ink does not leak.
- Pack the printer in a sturdy box so that it is placed with its bottom facing down, using sufficient protective material to ensure safe transport.
- Do not tilt the printer. Ink may leak.
- When a shipping agent is handling transport of the printer, have its box marked "THIS SIDE UP" to keep the printer with its bottom facing down. Mark also with "FRAGILE" or "HANDLE WITH CARE".

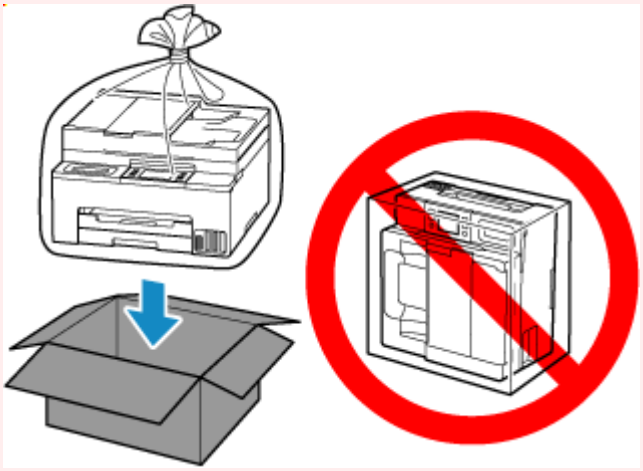

- Please handle with care and ensure the box remains flat and NOT turned upside down or on its side, as the printer may be damaged and ink in the printer may leak.

1. Select (Setup) on HOME screen.

➡ Using Touch Screen

The setup menu screen will appear.

2. Select **Maintenance**.

The **Maintenance** screen will appear.

3. Select **Transport mode**.

4. Confirm the message, then select **Yes**.

   If you do not want to enter the transporting mode, select **No**.

   Note

   - When entering the transporting mode and proceeding with the procedure, the power is turned off automatically.

5. Open the scanning unit / cover (A) .

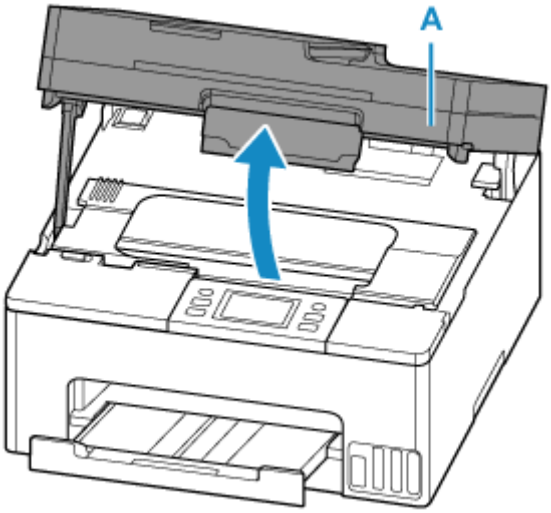

   Important

   - Do not touch tubes or other parts inside the printer. This can cause trouble with the printer.

6. Turn the ink valve lever (B) to the right.

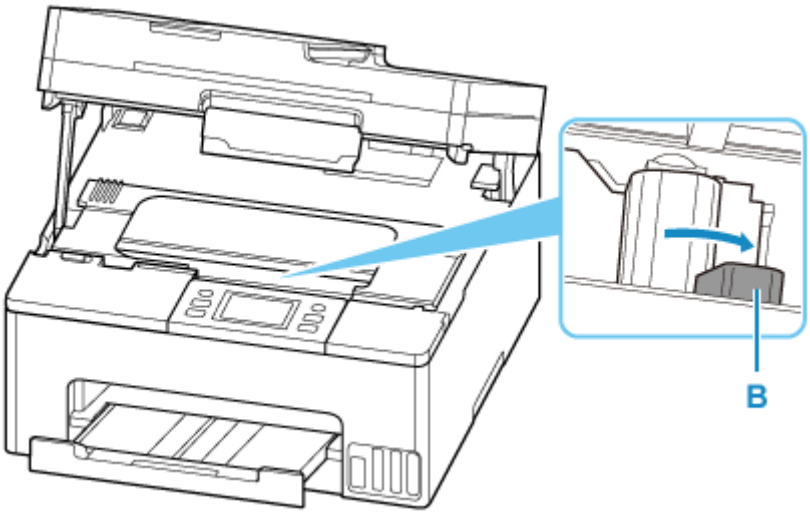

Important

- The inside of the printer may become stained with ink. Be careful not to get your clothes and your hands dirty.

7. Close the scanning unit / cover.

   To close the scanning unit / cover, hold it up once, then take it down gently.

   The printer is turned off.

8. Unplug power cord.

   Important

   - Do not remove the power plug from the outlet when the status light is on/blinking or the touch screen is on. This may cause the printer to malfunction or become unable to print.

9. Retract paper output tray.

   Note

   - Be sure you also retract the cassette if it has been extended to place legal-size paper.

10. Unplug the printer cable from the computer and from the printer, then unplug the power cord from the printer.

11. Use adhesive tape to secure all the covers on the printer to keep them from opening during transportation. Then pack the printer in the plastic bag.

    Close and seal the opening of the bag with an object such as tape so as not to leak ink.

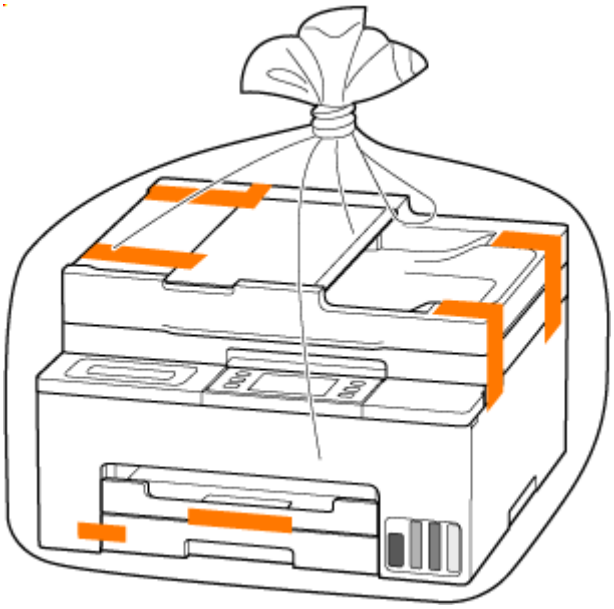

12. Attach the protective material to the printer when packing the printer in the box.

Important

- Carry the printer without putting your hands on the cassette. If you hold the cassette when carrying, the cassette may come off from the printer.

- After transporting your printer, place it in the original position, turn the ink valve lever to the left, and then turn on the printer.

When Repairing, Lending, or Disposing of the Printer

If you have entered personal data, passwords and/or other security settings on the printer, such information may be stored in the printer.

To keep your personal information safe, please be sure to reset all printer settings when sending the printer for repair, lending or transferring the printer to another person, or disposing of the printer.

➡ Reset settings

For printers with fax capabilities, user information and speed dial numbers can be backed up to a computer by utilizing the Speed Dial Utility2 software before resetting the printer or deleting data. Backed up data can be restored to the repaired printer or another Canon printer.

➡ Registering Recipients Using Speed Dial Utility2 (Windows)
➡ Registering Recipients Using Speed Dial Utility2 (macOS)

Keeping Print Quality High

The key to printing with the optimal printing quality is to prevent the print head from drying or clogging. Always observe the following rules for optimal printing quality.

Note

- Depending on the type of paper, ink may blur if you trace the printed area with a highlight pen or paint-stick, or bleed if water or sweat comes in contact with the printed area.

Never unplug the power cord until the power is turned off!

If you press the **ON** button to turn off the power, the printer caps the print head (nozzles) automatically to prevent from drying. Removing the power plug from the outlet while the status light is on/blinking or the touch screen is on will prevent the print head from being capped properly, and this will cause drying or clogging.

Check that the status light and touch screen display are off when removing the power plug.

Print periodically!

Just as the tip of a felt pen becomes dry and unusable if it has not been used for a long time, even if it is capped, the print head too, may become dried or clogged if the printer has not been used for a long time. We recommend you to use the printer at least once a month.

Ink Tips

How is ink used for various purposes other than printing?

Ink may be used for purposes other than printing.

During initial setup, some of the ink from the bundled ink bottles is used to fill the print head's nozzles to ensure the printer is print-ready.

To keep printer's performance, Canon printer performs cleaning automatically according to its condition. When the printer performs cleaning, a small amount of ink is consumed. In this case, all colors of ink may be consumed.

[Cleaning function]

The cleaning function helps the printer to suck air bubbles or ink itself from the nozzle and thus prevents print quality degradation or nozzle clogging.

Important

- The used ink is ejected into the maintenance cartridge. When the maintenance cartridge becomes full, replacement is necessary. If a message is displayed indicating that the maintenance cartridge is nearly full, replace the maintenance cartridge as soon as possible.

  ➡ Replacing the Maintenance Cartridge

Does black-and-white printing use color ink?

Black-and-white printing may use ink other than black ink depending on the type of printing paper or the settings of the printer driver. So, color ink is consumed even when printing in black-and-white.

Similarly, color inks are also consumed along with black ink during print head cleaning when Black is specified for cleaning.

Specifications

- Product Specifications
- Supported Paper Sizes and Weights
- Print Area
- Paper Load Limit

Product Specifications

General Specifications

Interface	**USB port:** Hi-Speed USB * **Network port:** Wired LAN: 100BASE-TX / 10BASE-T Wi-Fi: IEEE802.11n / IEEE802.11g / IEEE802.11b / IEEE802.11a / IEEE802.11ac * A computer that complies with Hi-Speed USB standard is required. Since the Hi-Speed USB interface is fully upwardly compatible with USB 1.1, it can be used at USB 1.1. USB and the network can be used at the same time. Wi-Fi and wired LAN cannot be used at the same time.
Operating environment	**Temperature:** 41 to 95 °F (5 to 35 °C) **Humidity:** 10 to 90 % RH (no condensation) * The performance of the printer may be reduced under certain temperature and humidity conditions. Recommended conditions: **Temperature:** 59 to 86 °F (15 to 30 °C) **Humidity:** 10 to 80 % RH (no condensation) * For the temperature and humidity conditions of papers such as photo paper, refer to the paper's packaging or the supplied instructions.
Storage environment	**Temperature:** 32 to 104 °F (0 to 40 °C) **Humidity:** 5 to 95 % RH (no condensation)
Power supply	AC 100-240 V, 50/60 Hz (The supplied power cord is only for the country or region you purchased.)
Power consumption	**Printing (Copy):** 22 W or less *1 **Standby (minimum):** 0.8 W or less *1*2 **Standby (all ports connected):** 1.4 W or less **OFF:** 0.1 W or less *1 USB connection to a PC *2 The wait time for standby cannot be changed.
External dimensions (W x D x H)	Approx. 14.8 x 15.0 x 8.9 in. (Approx. 374 x 380 x 225 mm) * With the Cassette and trays retracted.
Weight	Approx. 17.76 lb (Approx. 8.1 kg)

	* With the Print Head installed.

Scan Specifications

Scanner driver	**Windows:** TWAIN 1.9 Specification, WIA
Maximum scanning size	**Platen:** A4/Letter, 8.5" x 11.7"/216 x 297 mm **ADF:** A4/Letter/Legal, 8.5" x 14.0"/216 x 356 mm
Optical resolution (horizontal x vertical)	1200 x 2400 dpi * * Optical Resolution represents the maximum sampling rate based on ISO 14473.
Gradation (Input / Output)	**Gray:** 16 bit/8 bit **Color:** RGB each 16 bit/8 bit

Fax Specifications

Applicable line	Public Switched Telephone Network (PSTN) IP phone line (IP phone line with quality of no problem at all by using in conversation)
Communication mode	Super G3, G3
Data compressing system	**Black:** MH, MR, MMR **Color:** JPEG
Modem speed	max. 33.6 kbps (Automatic fallback)
Transmission speed	**Black:** Approx. 3 seconds/page at 33.6 kbps (Based on ITU-T No.1 chart for US specifications and Canon FAX Standard chart No.1 for others, both in standard mode.) **Color:** Approx. 1 minute/page at 33.6 kbps (Based on Canon COLOR FAX TEST SHEET.)
Gradation	**Black:** 256 levels **Color:** 24 bit Full Color (RGB each 8 bit)
Density adjustment	3 levels
Memory	**Transmission/reception:** approx. 250 pages (Based on ITU-T No.1 chart for US specifications and Canon FAX Standard chart No.1 for others, both in standard mode.)
Fax resolution	**Black Standard:** 203 pels/in. x 98 lines/in. (8 pels/mm x 3.85 lines/mm) **Black Fine, Photo:** 203 pels/in. x 196 lines/in. (8 pels/mm x 7.7 lines/mm) **Black Extra fine:** 300 x 300 dpi

	Color: 200 x 200 dpi
Dialing	Automatic dialing • Recipient (max. 100 destinations) • Group dial (max. 99 destinations) Regular dialing (with Numeric buttons) Automatic redialing Manual redialing (max. 10 destinations)
Others	Activity report (after every 20 transactions) Sequential broadcasting (max. 101 destinations) Rejected numbers (max. 10 destinations) Err reduction (VoIP) * * For details, see "**Error reduction setting (VoIP)**" in "**Advanced fax settings**".

Network Specifications

Communication protocol	SNMP, HTTP, TCP/IP (IPv4/IPv6)
Wired LAN	**Supported Standards:** IEEE802.3u (100BASE-TX) / IEEE802.3 (10BASE-T) **Transfer speed:** 10 Mbps/100 Mbps (auto switching) **Security:** IEEE802.1X (EAP-TLS/EAP-TTLS/PEAP)
Wi-Fi	**Supported Standards:** IEEE802.11n / IEEE802.11g / IEEE802.11b / IEEE802.11a / IEEE802.11ac **Frequency bandwidth:** 2.4 GHz / 5 GHz * A frequency band that can be used varies depending on country or region. **Communication distance:** Indoors 164 feet/50 m * Effective range varies depending on the installation environment and location. **Security:** WPA-PSK (TKIP/AES) WPA2-PSK (TKIP/AES) WPA3-SAE (AES) WPA-EAP (AES) * WPA2-EAP (AES) * WPA3-EAP (AES) * * Compatible with IEEE802.1X (EAP-TLS/EAP-TTLS/PEAP) **Setup:** WPS (Push button configuration/PIN code method) Easy wireless connect

Minimum System Requirements

Conform to the operating system's requirements when higher than those given here.

Windows

Operating System	Windows 11, Windows 10, Windows 8.1, Windows 7 SP1 Note: Operation can only be guaranteed on a PC with pre-installed operating system.
Amount of hard disk space required for installing the driver	1.5 GB or more The necessary amount of hard disk space may be changed without notice.

macOS

Operating System	macOS Catalina 10.15.7 - macOS Ventura 13

Other Supported OS

iOS/iPadOS, Android, Chrome OS Some functions may not be available with the supported OS. Refer to the Canon web site for details.

Information in this manual is subject to change without notice.

Supported Paper Sizes and Weights

Page Sizes

You can use the following page sizes.

Note

- Page sizes and media types the printer supports differ depending on the OS you are using.

Standard sizes:

- Letter
- Legal
- Executive
- A5
- A4
- B5
- B-Oficio
- M-Oficio
- Foolscap
- Legal(India)
- KG/4"x6"(10x15)
- 5"x7"(13x18cm)
- 7"x10"(18x25cm)
- 8"x10"(20x25cm)
- L(89x127mm)
- 2L(127x178mm)
- Hagaki
- Hagaki 2
- Envelope Com 10
- Envelope DL
- Nagagata 3
- Nagagata 4
- Yougata 4
- Yougata 6
- Envelope C5
- Envelope Monarch

Special sizes

- Minimum size: 3.50 x 5.00 in. (89.0 x 127.0 mm)
- Maximum size: 8.50 x 14.00 in. (216.0 x 355.6 mm)

Paper Weight

You can use paper in the following weight range.

- Plain paper: From 17 to 28 lb (64 to 105 g /m^2)

Paper Load Limit

This section shows the paper load limits of the cassette and the paper output tray.

➡ Paper Load Limits of Cassette
➡ Paper Load Limit of Paper Output Tray

Note

- Page sizes and media types differ depending on the country or region where the paper is sold. For details on page sizes and media types, access the Canon website.

Paper Load Limits of Cassette

Genuine Canon Paper

Paper for printing documents:

Media Name <Model No.>	Cassette
Canon Red Label Superior <WOP111>	Approx. 250 sheets
Canon Océ Office Colour Paper <SAT213>	Approx. 200 sheets
High Resolution Paper <HR-101N>*1	Approx. 80 sheets

Paper for printing photos:

Media Name <Model No.>	Cassette
Glossy Photo Paper "Everyday Use" <GP-501/GP-508>*2 Photo Paper Glossy <GP-701>*2 Photo Paper Plus Glossy II <PP-201/PP-208/PP-301>*2 Photo Paper Pro Luster <LU-101>*2 Photo Paper Plus Semi-gloss <SG-201>*2 Matte Photo Paper <MP-101>	A4, Letter, 5"x7"(13x18cm), 8"x10"(20x25cm), 2L(127x178mm): 10 sheets KG/4"x6"(10x15), L(89x127mm), Hagaki: 20 sheets

Paper for making original goods:

Media Name <Model No.>	Cassette
Photo Stickers (16 stickers per sheet) <PS-108> Photo Stickers (Free Cutting) <PS-208> Photo Stickers (Variety Pack) <PS-808> Restickable Photo Paper <RP-101> Removable Photo Stickers <PS-308R> **Light Fabric Iron-on Transfers** <LF-101>	1 sheet

Paper other than Genuine Canon Paper

Common Name	Cassette
Plain Paper (including recycled paper)*1	Approx. 250 sheets
Envelopes	10 envelopes

*1 Normal feeding at maximum capacity may not be possible with some types of paper, or under very high or low temperature or humidity. In this case, load half the amount of paper or less.
*2 Feeding from a loaded stack of paper may leave marks on the printed side or prevent efficient feeding. In this case, load one sheet at a time.

Paper Load Limit of Paper Output Tray

Genuine Canon Paper

Paper for printing documents:

Media Name <Model No.>	Paper Output Tray
Canon Red Label Superior <WOP111> Canon Océ Office Colour Paper <SAT213>	Approx. 75 sheets (Legal: 10 sheets)
High Resolution Paper <HR-101N>	Approx. 65 sheets

Paper other than Genuine Canon Paper

Common Name	Paper Output Tray
Plain Paper (including recycled paper)	Approx. 75 sheets (Legal: 10 sheets)

When continuing printing with paper other than the above, we recommend removing already printed paper from the paper output tray to avoid smearing or discoloration.

Supported Media Types

For best results, choose paper designed for how you are printing. A variety of paper for documents as well as photos or illustrations is available from Canon. Use genuine Canon paper to print important photos, when possible.

- Supported Paper Sizes and Weights
- Unsupported Media Types

Note

- Refer to Handling Paper before use.
- Page sizes and media types differ depending on the country or region where the paper is sold. For details on page sizes and media types, access the Canon website.
- Genuine Canon paper is not available in some countries or regions. Note that in the United States, Canon paper is not sold by model number. Instead, purchase paper by name.

Recommended Genuine Canon Paper According to Purpose

Paper for printing documents:

- Canon Red Label Superior <WOP111>
- Canon Océ Office Colour Paper <SAT213>
- High Resolution Paper <HR-101N>

Paper for printing photos:

- Glossy Photo Paper "Everyday Use" <GP-501/GP-508>
- Photo Paper Glossy <GP-701>
- Photo Paper Plus Glossy II <PP-201/PP-208/PP-301>
- Photo Paper Pro Luster <LU-101>
- Photo Paper Plus Semi-gloss <SG-201>
- Matte Photo Paper <MP-101>

Paper for making original goods:

- Photo Stickers (16 stickers per sheet) <PS-108>
- Photo Stickers (Free Cutting) <PS-208>
- Photo Stickers (Variety Pack) <PS-808>
- Restickable Photo Paper <RP-101>
- Removable Photo Stickers <PS-308R>
- **Light Fabric Iron-on Transfers** <LF-101>

Usable Media Types Other Than Genuine Canon paper

- Plain Paper (including recycled paper)

- Envelopes

➡ Paper Settings on the Printer Driver and the Printer (Media Type) (Windows)

Unsupported Media Types

Do not use the following types of paper. Using such paper will cause not only unsatisfactory results, but also the printer to jam or malfunction.

- Folded, curled, or wrinkled paper
- Damp paper
- Paper thinner than a postcard, including plain paper or notepad paper cut to a small size (when printing on paper smaller than A5)
- Picture postcards
- Postcards affixed with photos or stickers
- Envelopes with a double flap
- Envelopes with an embossed or treated surface
- Envelopes whose gummed flaps are already moistened and adhesive
- Any type of paper with holes
- Paper that is not rectangular
- Paper bound with staples or glue
- Paper with an adhesive surface on the back such as label seal
- Paper decorated with glitter, etc.

Handling Paper

- For warnings on use of the non-printable side, see each product's usage information.
- Be careful not to rub or scratch the surfaces of any types of paper when handling.
- Hold the paper as closely as possible to its edges and try not to touch the printing surface. The print quality may be degraded if the printing surface is smudged with sweat or oil that comes from your hands.
- Do not touch the printed surface until the ink is dried. Even when the ink is dried, be careful not to touch the printed surface as much as possible when handling. Due to the nature of the pigment ink, the ink on the printed surface may be removed when being rubbed or scratched.
- Take out only the necessary number of paper from the package, just before printing.
- To avoid curling, when you do not print, put unused paper back into the package and keep it on a level surface. And also, store it avoiding heat, humidity, and direct sunlight.

Economy Mode

By setting **Print qlty** to **Economy**, the consumption of ink can be reduced. More printing is available compared with when **Print qlty** is set to **Standard**.

- **Number of printable sheets (A4 plain paper)**

  Number of printable sheets per pigment black ink bottle

  Standard mode: 3,000 sheets

  Economy mode: 4,500 sheets

  Number of printable sheets per pigment color ink bottle

  Standard mode: 3,000 sheets

  Economy mode: 4,500 sheets

- **Measurement conditions**
  - Measurement images:

    Color printing: A4 color document ISO/IEC24712
  - Measurement method:

    Canon original
  - Paper type:

    Plain paper
  - Print driver setting:

    Setting to the default for plain paper (setting **Quality** to **Economy**).

*The number of printable sheets is calculated based on the ink bottle filled from the second time on, instead of the ink bottle filled when the printer is used for the first time.

Printing

- Printing Photos and Documents
- Printing Hagaki and Envelopes
- Other Various Printing Features

Printing Photos and Documents

- Printing from Computer
- Printing from Smartphone/Tablet
- Using PIXMA/MAXIFY Cloud Link

Printing from Computer

- Printing from Application Software (Windows Printer Driver)
- Printing from Application Software (macOS AirPrint)
- Printing Using Canon Application Software
- Printing from Chrome OS

Printing from Application Software (Windows Printer Driver)

- Basic Printing Setup Basic
- Main Controls (Basic Settings Tab)
- Set Media Type, Quality, etc. (Media/Quality Tab)
- Set the Layout of Printed Documents (Page Setup Tab)
- Perform maintenance or settings (Maintenance tab)
- Overview of the Printer Driver
- Updating the Driver

Basic Printing Setup

In the **Basic Settings** tab, you can print in various ways according to your purpose.

1. Check that printer is turned on

2. Open printer driver's setup screen

3. Select Profile (A)

   Select the print settings according to your purpose in **Profiles** on the **Basic Settings** tab.
   If you select a print setting, **Paper Size** and **Media Type** will change automatically.

   Note

   - When the paper size to be printed is selected from **Printer Paper Size**, the zoom level is automatically set according to the selected paper size.
     To select a zoom level of your choice, add a checkmark to **Zoom** and enter a number.

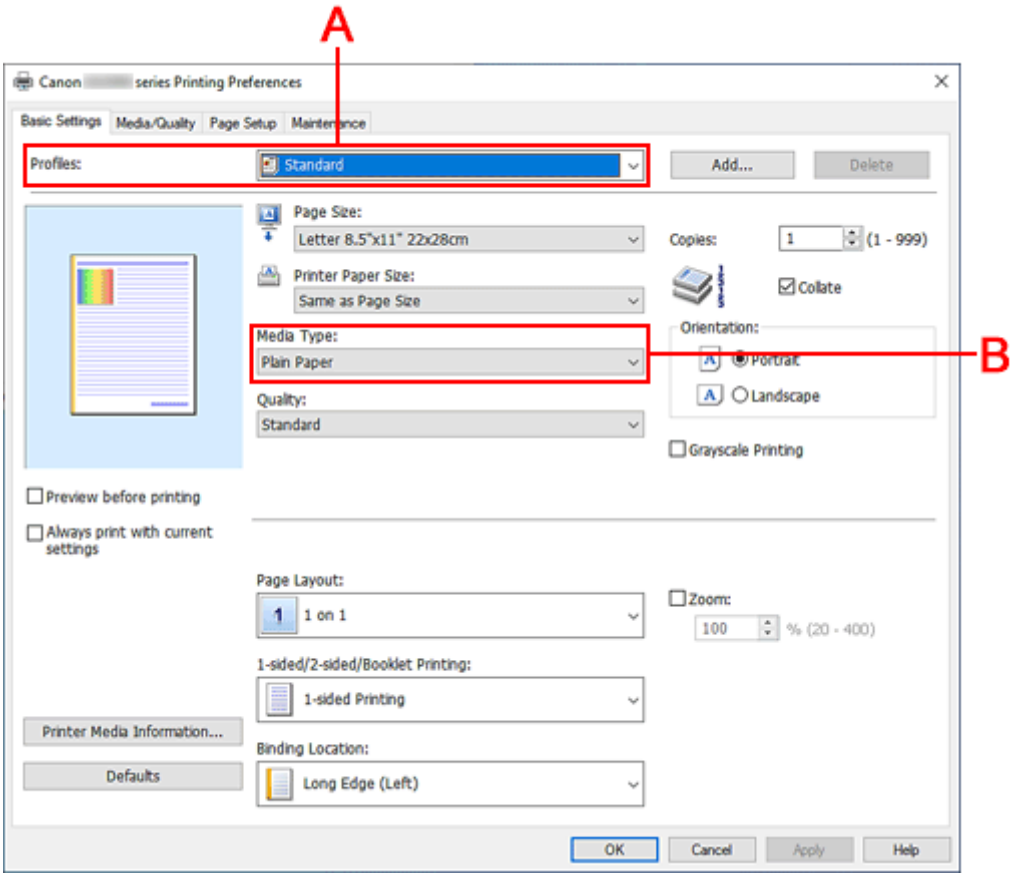

4. Select Media Type (B) According to Requirements

5. Set Paper

6. Click **OK**

Note

- For details about the paper information to be registered to the printer driver and on the printer, see the following:
  - Paper Settings on the Printer Driver and the Printer (Media Type)
  - Paper Settings on the Printer Driver and the Printer (Paper Size)

Main Controls (Basic Settings Tab)

- Basic Settings Tab Description
- Paper Settings on the Printer Driver and the Printer (Media Type)
- Paper Settings on the Printer Driver and the Printer (Paper Size)

Basic Settings Tab Description

The **Basic Settings** tab is for registering commonly used print settings. When you select a registered setting, the printer automatically switches to the preset items.

- Profiles
- Settings Preview
- Preview before printing
- Always print with current settings
- Page Size
- Printer Paper Size
- Media Type
- Quality
- Copies
- Collate
- Orientation
- Grayscale Printing
- Page Layout
- Zoom
- 1-sided/2-sided/Booklet Printing
- Binding Location

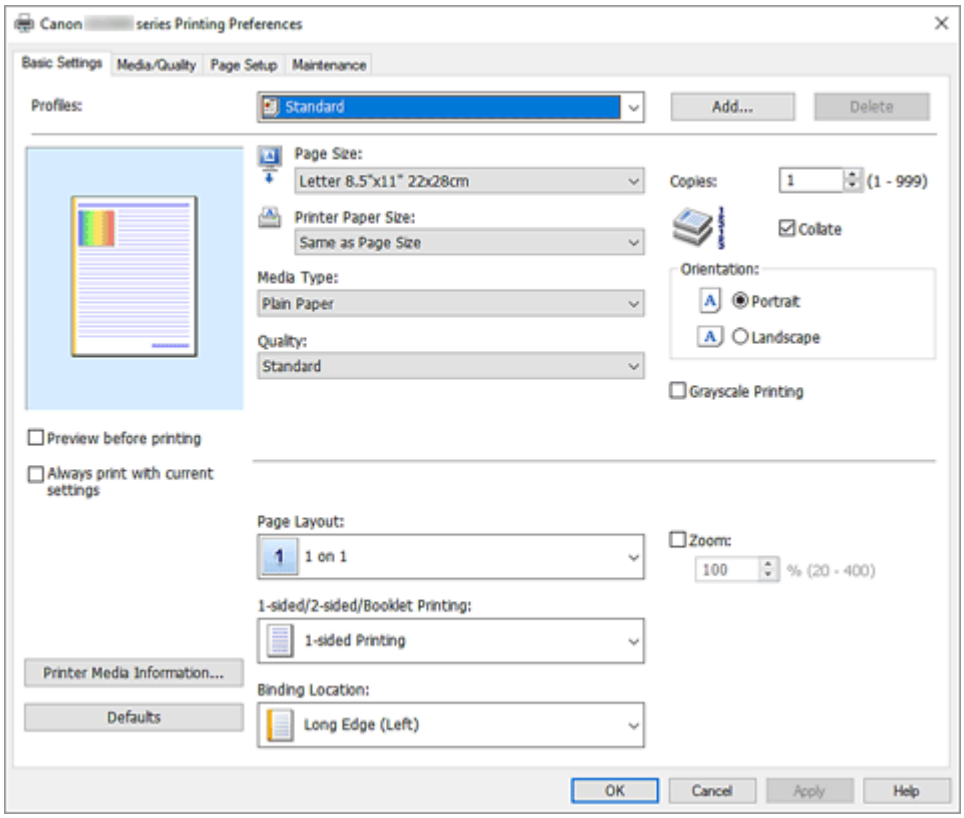

Profiles

The names and icons of frequently used printing profiles are registered. When you select a printing profile according to the purpose of the document, settings that match the purpose are applied.
You can also change a printing profile and register it under a new name. You can delete the registered printing profile.

Standard

These are the factory settings.

If **Page Size**, **Orientation**, and **Copies** were set from the application software, those settings have priority.

Paper Saving

Select this setting to save paper when printing a general document. **Page Layout** is set to **2 on 1**, and **1-sided/2-sided/Booklet Printing** is set to **2-sided Printing**.

If **Page Size**, **Orientation**, and **Copies** were set from the application software, those settings have priority.

Photo Printing

If you select this setting when printing a photo, the photo paper and photo size generally used are set.

If **Orientation** and **Copies** were set from the application software, those settings have priority.

Envelope

If you select this setting for printing an envelope, **Media Type** is set automatically to **Envelope**. In the **Envelope Size Setting** dialog box, select the size of the envelope to be used.

Greeting Card

When selected for printing a greeting card, the **Media Type** is automatically set to **Inkjet Greeting Card**. **Quality** will be set to **High**.

Note

- You cannot change the order of print settings.

Add...

Displays the **Add to Profiles** dialog box.

Click this button when you want to save the information that you set on the **Basic Settings**, **Media/Quality**, and **Page Setup** tabs to **Profiles**.

Delete

Deletes a registered printing profile.

Select the name of the setting to be deleted from **Profiles**, and click **Delete**. When a confirmation message is displayed, click **OK** to delete the specified printing profile.

Note

- Printing profiles that are registered in the initial settings cannot be deleted.

Settings Preview

The paper illustration shows how the original will be laid out on a sheet of paper.

You can check an overall image of the layout.

Preview before printing

Shows what the print result will look like before you actually print the data.

Check this check box to display a preview before printing.

Uncheck this check box if you do not want to display a preview.

Always print with current settings

Prints documents with the current settings starting from the next print execution.

When you select this function and then close the printer driver setup window, the information that you

set on the **Basic Settings**, **Media/Quality**, and **Page Setup** tabs are saved and printing with the same settings is possible starting from the next print execution.

Important

- If you log on with a different user name, the settings that were set when this function was enabled are not reflected in the print settings.
- If a setting was specified on the application software, it has priority.

Page Size

Selects a page size.

Ensure that you select the same page size as you selected within the application.

If you select **Custom...**, the **Custom Paper Size** dialog box opens and allows you to specify any vertical and horizontal dimensions for the paper size.

Printer Paper Size

Selects the size of paper actually loaded into the printer.

Normally, it will appear as **Same as Page Size**, and the document is printed with no scaling.

If you select a paper size that is smaller than the **Page Size**, the document size will be reduced. If you select a paper size that is larger, the document size will be enlarged.

Also if you select **Custom...**, the **Custom Paper Size** dialog box opens and allows you to specify any vertical and horizontal dimensions for the paper size.

Media Type

Selects a type of printing paper.

Select a media type that matches the paper that is loaded in the printer. This ensures that printing is carried out properly for the specified paper.

Quality

Selects your desired printing quality.

Select one of the following to set the print quality level that is appropriate for the purpose.

High

Gives priority to print quality over printing speed.

Standard

Prints with average speed and quality.

Economy

Reduces the amount of ink used when printing.

Note

- Selecting **Economy** in **Quality** reduces ink consumption. This means that you can print more than if you have **Standard** selected.
  For details on Economy Mode, see "Economy Mode."

Copies

Specifies the number of copies you want to print. You can specify a value from 1 to 999.

Important

- When the application software that you used to create the document has the same function, specify the settings on the printer driver. However, if the print results are not acceptable, specify the function settings on the application software.

Collate

Check this check box to group together the pages of each copy when you want to print multiple copies. Uncheck this check box when you want to print with all pages of the same page number grouped together.

Important

- When the application software that you used to create the document has the same function, give priority to the printer driver settings. However, if the print results are not acceptable, specify the function settings on the application software. When you specify the number of copies and the printing order with both the application and this printer driver, the number of copies may be multiplied numbers of the two settings or the specified printing order may not be enabled.

Orientation

Selects the printing orientation.

If the application used to create your document has a similar function, select the same orientation that you selected in that application.

Portrait

Prints the document so that its top and bottom positions are unchanged relative to the paper feed direction. This is the default setting.

Landscape

Prints the document by rotating it 90 degrees relative to the paper feed direction.

You can change the rotation direction by going to the **Maintenance** tab, opening the **Custom Settings** dialog box, and then using **Rotate 90 degrees left when orientation is [Landscape]** check box.

To rotate the document 90 degrees to the left when printing, select the **Rotate 90 degrees left when orientation is [Landscape]** check box.

Grayscale Printing

This function converts the data to monochrome data when printing your document.

Page Layout

Selects the size of the document you want to print and the type of printing.

1 on 1 to 16 on 1

Multiple pages of document can be printed on one sheet of paper.

To change the page order, click **Preferences...**. In the **Page Layout Printing** dialog box that appears, specify **Page Order**.

Poster (1 x 2) to Poster (4 x 4)

This function enables you to enlarge the image data and divide the enlarged data into several pages to be printed. You can also glue together these sheets of paper to create large printed matter, such as a poster.

Preferences...

Opens the **Poster Printing** dialog box.

Click this button to set details on poster printing.

Zoom

Specifies an enlargement or reduction ratio for the document you want to print.

1-sided/2-sided/Booklet Printing

1-sided Printing

Select when performing single-sided printing.

2-sided Printing

Select when performing duplex printing.

Automatic

Selects whether duplex printing is to be performed automatically or manually.

To perform duplex printing manually, uncheck this check box.

Booklet Printing

The booklet printing function allows you to print data for a booklet. Data is printed on both sides of the paper. This type of printing ensures that pages can be collated properly, in page number order, when the printed sheets are folded and stapled at the center.

Automatic

Selects whether duplex printing is to be performed automatically or manually.

To perform duplex printing manually, uncheck this check box.

Preferences...

Opens the **Booklet Printing** dialog box.

Click this button to set details on booklet printing.

Binding Location

Selects the stapling margin position. The printer analyzes the **Orientation** and **Page Layout** settings, and automatically selects the best stapling margin position. Check **Binding Location**, and select from the list to change it.

To specify the width of the binding margin, set it from the **Page Setup** tab.

Printer Media Information...

Displays **Printer Media Information** dialog box.

You can check the printer settings and apply the checked settings to the printer driver.

Defaults

Restores all the settings you have changed to their default values.

Click this button to return all settings on the **Basic Settings**, **Media/Quality**, and **Page Setup** tabs to their default values (factory settings).

Add to Profiles dialog box

This dialog box allows you to save the information that you set on the **Basic Settings**, **Media/Quality**, and **Page Setup** tabs and add the information to the **Profiles** list on the **Basic Settings** tab.

Name

Enter the name for the printing profile you wish to save.

Up to 255 characters can be entered.

The name appears, with its associated icon, in the **Profiles** list on the **Basic Settings** tab.

Options...

Opens the **Add to Profiles** dialog box.

Changes the details of printing profile to be saved.

Add to Profiles dialog box

Select the icons of the printing profiles to be registered to **Profiles**, and change the items to be saved in the printing profiles.

Icon

Select the icon for the printing profile you wish to save.
The selected icon appears, with its name, in the **Profiles** list on the **Basic Settings** tab.

Save the paper size setting

Saves the paper size to the printing profile in **Profiles**.
To apply the saved paper size when the printing profile is selected, check this check box.
If this check box is unchecked, the paper size is not saved, and consequently the paper size setting is not applied when the printing profile is selected. Instead the printer prints with the paper size specified with the application software.

Save the orientation setting

Saves the **Orientation** to the printing profile in **Profiles**.
To apply the saved print orientation when the printing profile is selected, check this check box.
If this check box is unchecked, the print orientation is not saved, and consequently the **Orientation** setting is not applied when the printing profile is selected. Instead the printer prints with the print orientation specified with the application software.

Save the copies setting

Saves the **Copies** setting to the printing profile in **Profiles**.
To apply the saved copies setting when the printing profile is selected, check this check box.
If this check box is unchecked, the copies setting is not saved, and consequently the **Copies** setting is not applied when the printing profile is selected. Instead the printer prints with the copies setting specified with the application software.

Custom Paper Size dialog box

This dialog box allows you to specify the size (width and height) of the custom paper.

Units

Select the unit for entering a user-defined paper size.

Paper Size

Specifies the **Width** and the **Height** of the custom paper. Measurement is shown according to the units specified in **Units**.

Page Layout Printing dialog box

This dialog box allows you to select the number of document pages to be placed on one sheet of paper, the page order, and whether a page border line is to be printed around each document page. The settings specified in this dialog box can be confirmed in the settings preview on the printer driver.

Page Order

Specifies the document orientation to be printed on a sheet of paper.

Page Border

Prints a page border line around each document page. Check this check box to print the page border line.

Exclude single page documents from Page Layout Printing

If you add a checkmark, single-page documents are printed on a single sheet without performing Page Layout Printing.

Poster Printing dialog box

This dialog box allows you to select the size of the image to be printed. You can also make settings for cut lines and paste markers which are convenient for pasting together the pages into a poster.
The settings specified in this dialog box can be confirmed in the settings preview on the printer driver.

Print "Cut/Paste" in margins

Specifies whether to print the words "Cut" and "Paste" in the margins. These words serve as guidelines for pasting together the pages into a poster. Check this check box to print the words.

Note

- Depending on the environment of the printer driver you are using, this function may not be available.

Print "Cut/Paste" lines in margins

Specifies whether to print cut lines that serve as guidelines for pasting together the pages into a poster. Check this check box to print the cut lines.

Print page range

Specifies the printing range. Select **All** under normal circumstances.
Select **Pages** to specify a specific page or range.

Note

- If some of the pages have not been printed well, specify the pages that do not need to be printed by clicking them in the settings preview of the **Page Setup** tab. Only the pages shown on the screen will be printed this time.

Booklet Printing dialog box

This dialog box allows you to set how to bind the document as a booklet. Printing only on one side and printing a page border, can also be set in this dialog box.
The settings specified in this dialog box can be confirmed in the settings preview on the printer driver.

Preview Icon

Shows the settings made on the **Booklet Printing** dialog box.
You can check what the document will look like when printed as a booklet.

Margin for stapling

Specifies which side of the booklet is to be stapled.

Insert blank page

Selects whether to print the document on one side or both sides of the booklet.
Check this check box to print the document on one side of the booklet and select the side to be left blank from the list.

Margin

Specifies the width of the stapling margin.

The specified width becomes the stapling margin from the center of the sheet.

Page Border

Prints a page border line around each document page.

Check this check box to print the page border line.

Printer Media Information dialog box

This dialog box allows you to check the printer settings and apply the checked settings to the printer driver.

Paper Source

The paper source of the media is being displayed.

Media Type

Displays the **Media Type** that is currently set on the printer.

To apply the displayed setting to the printer driver, click **Set**.

Page Size

Displays the **Page Size** that is currently set on the printer.

To apply the displayed setting to the printer driver, click **Set**.

Paper Settings on the Printer Driver and the Printer (Media Type)

When you use this printer, selecting a media type and paper size that matches the print purpose will help you achieve the best print results.
Depending on the media type you are using, specify the media type settings on the printer driver or the printer's operation panel as described below.

Canon genuine papers (Document Printing)

Media name <Model No.>	Media Type in the printer driver	Paper information registered on the printer
Canon Red Label Superior <WOP111>	**Plain Paper**	**Plain paper**
Canon Océ Office Colour Paper <SAT213>	**Plain Paper**	**Plain paper**
High Resolution Paper <HR-101N>	**High Resolution Paper**	**High-Res Paper**

Canon genuine papers (Photo Printing)

Media name <Model No.>	Media Type in the printer driver	Paper information registered on the printer
Photo Paper Plus Glossy II <PP-201/PP-208/PP-301>	**Photo Paper Plus Glossy II**	**Plus Glossy II**
Photo Paper Pro Luster <LU-101>	**Photo Paper Pro Luster**	**Pro Luster**
Photo Paper Plus Semi-gloss <SG-201>	**Photo Paper Plus Semi-gloss**	**Plus Semi-gloss**
Glossy Photo Paper "Everyday Use" <GP-501/GP-508>	**Glossy Photo Paper**	**Glossy**
Matte Photo Paper <MP-101>	**Matte Photo Paper**	**Matte**

Canon genuine papers (Original Product)

Media name <Model No.>	Media Type in the printer driver	Paper information registered on the printer
Restickable Photo Paper <RP-101>	**Glossy Photo Paper**	**Glossy**
Removable Photo Stickers <PS-308R>	**Glossy Photo Paper**	**Glossy**
Light Fabric Iron-on Transfers <LF-101>	**Light Fabric Iron-on Transfers**	**LF Iron Transfers**

Commercially available papers

Media name	Media Type in the printer driver	Paper information registered on the printer
Plain Paper (including recycled paper)	**Plain Paper**	**Plain paper**
Envelopes	**Envelope**	**Envelope**
Window envelope	**Envelope**	**Envelope**
Kraft Paper	**High Resolution Paper**	**High-Res Paper**
Embossed Paper	**High Resolution Paper**	**High-Res Paper**
Washi	**Washi**	**Others**
Label Paper	**Label Paper**	**Others**
Greeting Cards	**Inkjet Greeting Card**	**Others**

Note

- For information on Washi that can be used with the printer, see "Print Using Washi."

Paper Settings on the Printer Driver and the Printer (Paper Size)

When you use this printer, selecting a paper size that matches the print purpose will help you achieve the best print results.
You can use the following paper sizes on this printer.

Printer Paper Size in the printer driver	Paper information registered on the printer
Letter 8.5"x11" 22x28cm	Letter
Legal 8.5"x14" 22x36cm	Legal
Executive 7.25"x10.5" 184.2x266.7mm	Executive
A5	A5
A4	A4
B5	B5
B-Oficio 8.5"x14" 216.0x355.0mm	B-Oficio
M-Oficio 8.50"x13.43" 216.0x341.0mm	M-Oficio
Foolscap/F4/Oficio2	FC/F4/Oficio2
Legal (India) 8.46"x13.58" 215x345mm	Legal(India)
4"x6" 10x15cm	KG/4"x6"(10x15)
5"x7" 13x18cm	2L/5"x7"(13x18)
7"x10" 18x25cm	7"x10"(18x25cm)
8"x10" 20x25cm	8"x10"(20x25cm)
L 89x127mm	L(89x127mm)
2L 127x178mm	2L/5"x7"(13x18)
Hagaki 100x148mm	Hagaki
Hagaki 2 200x148mm	Hagaki 2
Envelope Com 10	Envelope Com 10
Envelope DL	Envelope DL
Nagagata 3 4.72"x9.25"	Nagagata 3
Nagagata 4 3.54"x8.07"	Nagagata 4
Yougata 4 4.13"x9.25"	Yougata 4

Yougata 6 3.86"x7.48"	**Yougata 6**
Envelope C5	**Envelope C5**
Envelope Monarch 3.88"x7.5" 98.4x190.5mm	**Envelope Monarch**
Custom Size	**Others**

Printing on Postcards

1. Load postcard on the printer

2. Open the printer driver setup window

3. Select commonly used settings

   Display the **Basic Settings** tab, and for **Profiles**, select **Standard**.

4. Select the paper size

   For **Printer Paper Size**, select **Hagaki 100x148mm** or **Hagaki 2 200x148mm**.

   Important

   - Return postcards can be used only when you print them from the computer.
   - When printing a return postcard, always set the paper size to **Hagaki 2 200x148mm** from your application software or the printer driver.
   - Do not fold the return postcard. If a crease is formed, the printer will not be able to feed the postcard properly, and this condition will cause line shifts or a paper jam.

5. Select the media type

   Select the Hagaki you want to use from **Hagaki** in **Media Type**.

   Important

   - This printer cannot print on postcards that have photos or stickers attached.
   - You will get cleaner printing if you print the message side first and then print the address side.
   - The paper settings on the printer driver are different, depending on whether you are printing on the address side or the message side.
     For details about the paper information to be registered to the printer driver and on the printer, see the following:
     - Paper Settings on the Printer Driver and the Printer (Media Type)
     - Paper Settings on the Printer Driver and the Printer (Paper Size)

6. Set the print orientation

   To print the address horizontally, set **Orientation** to **Landscape**.

7. Select the print quality

   For **Quality**, select the quality according to your purpose.

8. Click **OK**

   When you perform printing, the data will be printed onto the postcard.

Setting Up Envelope Printing

1. Load envelope on the printer

2. Open the printer driver setup window

3. Select the media type

   Select **Envelope** from **Profiles** on the **Basic Settings** tab.

4. Select the paper size

   When the **Envelope Size Setting** dialog box is displayed, select the envelope size you want to use, and then click **OK**.

5. Set the orientation

   To print the addressee horizontally, select **Landscape** for **Orientation**.

   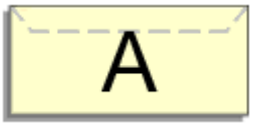

   Note

   - If **Envelope Com 10**, **Envelope DL**, **Yougata 4 4.13"x9.25"**, **Yougata 6 3.86"x7.48"**, **Envelope C5**, or **Envelope Monarch 3.88"x7.5" 98.4x190.5mm** is selected for **Printer Paper Size**, the printer rotates the paper 90 degrees to the left to print, regardless of the **Rotate 90 degrees left when orientation is [Landscape]** setting for **Custom Settings** in the **Maintenance** tab.

6. Select the print quality

   For **Quality**, select the quality according to your purpose.

7. Click **OK**

   When you perform print, the information is printed on the envelope.

Important

- When you perform envelope printing, guide messages are displayed.
  To hide the guide messages, check the **Do not show this message again** check box.
  To show the guide again, click the **View Printer Status** button on the **Maintenance** tab, and start the Canon IJ Status Monitor.
  Then click **Envelope Printing** from **Display Guide Message** of the **Option** menu to enable the setting.

Registering a Frequently Used Printing Profile

You can register the frequently used printing profile to **Profiles** on the **Basic Settings** tab. Unnecessary printing profiles can be deleted at any time.

Registering a Printing Profile

1. Open the printer driver setup window

2. Set the necessary items

   From **Profiles** on the **Basic Settings** tab, select the printing profile to be used and if necessary, change each of the settings.
   You can also register necessary items on the **Media/Quality** and **Page Setup** tabs.

3. Click **Add...**

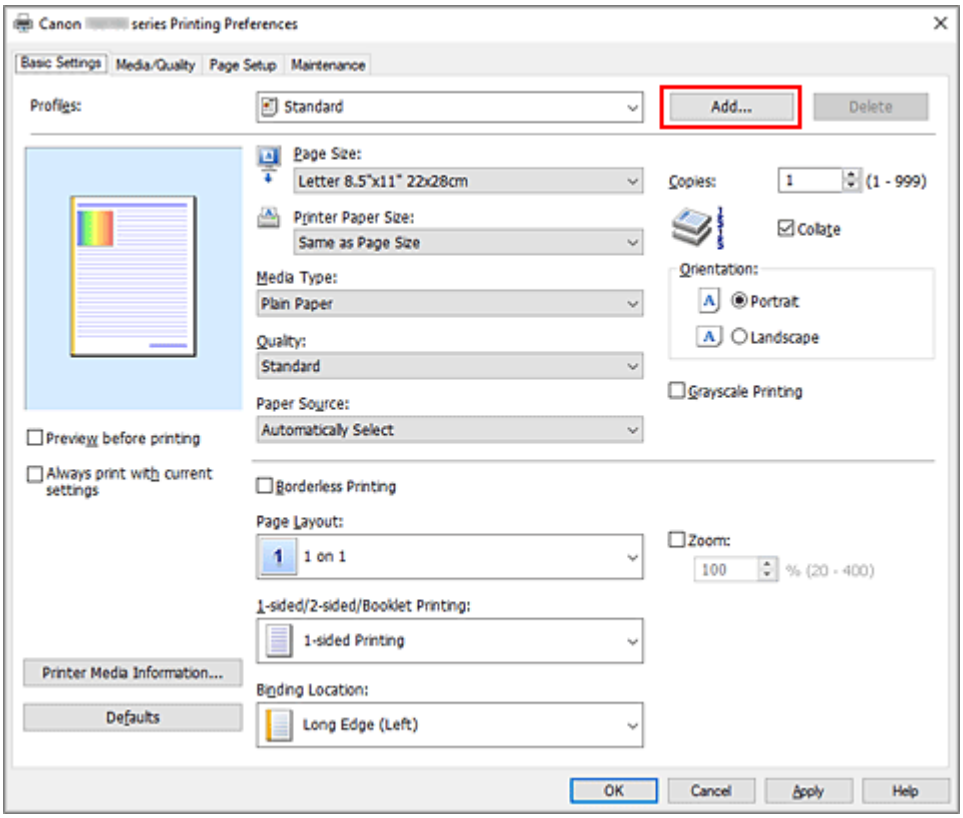

   The **Add to Profiles** dialog box opens.

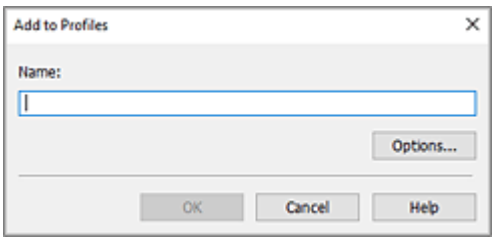

4. Save the settings

   Enter a name for the print settings to register in the **Name** field. If necessary, click **Options...**, set the items, and then click **OK**.
   In the **Add to Profiles** dialog box, click **OK** to save the print settings and return to the **Basic Settings** tab.
   The name and icon are displayed in **Profiles**.

Important

- To save the page size, orientation, and number of copies that was set in each sheet, click **Options...**, and check each item.

Note

- When you re-install the printer driver or upgrade the printer driver version, the print settings that are already registered will be deleted from **Profiles**.
  Registered print settings cannot be saved and preserved. If a profile is deleted, register the print settings again.

Deleting Unnecessary Printing Profile

1. Select the printing profile to be deleted

   Select the printing profile you want to delete from the **Profiles** list on the **Basic Settings** tab.

2. Delete the printing profile

   Click **Delete**. When the confirmation message appears, click **OK**.
   The selected printing profile is deleted from the **Profiles** list.

Note

- Printing profiles that are registered in the initial settings cannot be deleted.

Set Media Type, Quality, etc. (Media/Quality Tab)

- **Media/Quality Tab Description**
- **Adjust Colors**
- **Specifying Color Correction**
  - Optimal Photo Printing of Image Data
  - Adjusting Colors with the Printer Driver
  - Printing with ICC Profiles

Media/Quality Tab Description

The **Media/Quality** tab allows you to create a basic print setup in accordance with the media type. You can also adjust the print quality and color tones.

- Settings Preview
- Media Type
- Paper Source
- Quality
- Color/Intensity
- Grayscale Printing
- Preview before printing

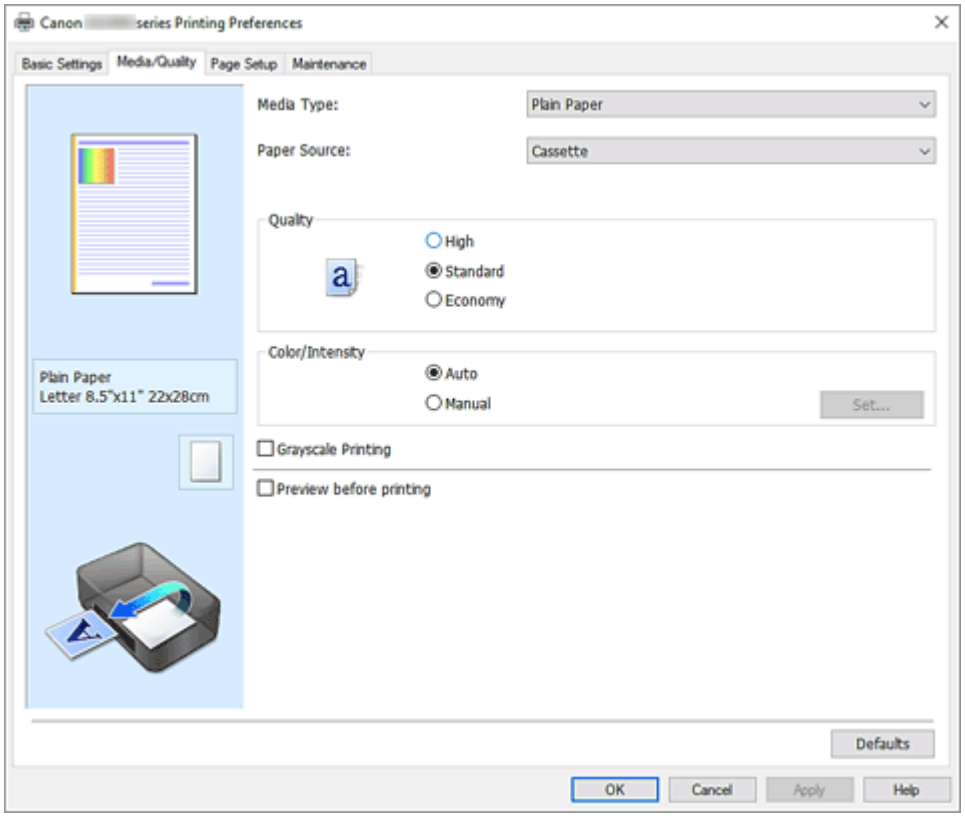

Settings Preview

The paper illustration shows how the original will be laid out on a sheet of paper.
You can check an overall image of the layout.

Media Type

Selects a type of printing paper.
Select a media type that matches the paper that is loaded in the printer. This ensures that printing is carried out properly for the specified paper.

Paper Source

Shows the source from which paper is supplied.

Cassette

Paper is always supplied from the cassette.

Quality

Selects your desired printing quality.

Select one of the following to set the print quality level that is appropriate for the purpose.

Important

- Depending on the **Media Type** settings, the same print results may be produced even if the **Quality** is changed.

High

Gives priority to print quality over printing speed.

Standard

Prints with average speed and quality.

Economy

Reduces the amount of ink used when printing.

Note

- Selecting **Economy** in **Quality** reduces ink consumption. This means that you can print more than if you have **Standard** selected.
  For details on Economy Mode, see "Economy Mode."

Color/Intensity

Selects color adjustment method.

Auto

Cyan, **Magenta**, **Yellow**, **Brightness**, **Contrast**, and so on are adjusted automatically.

Manual

Select when you set the individual settings such as **Cyan**, **Magenta**, **Yellow**, **Brightness**, **Contrast**, etc. and **Color Correction** method.

Set...

Select **Manual** for **Color/Intensity** to enable this button.

In the **Manual Color Adjustment** dialog box, you can adjust individual color settings such as **Cyan**, **Magenta**, **Yellow**, **Brightness**, and **Contrast** on the **Color Adjustment** tab, and select the **Color Correction** method on the **Matching** tab.

Note

- If you want to use an ICC profile to adjust colors, use the **Manual Color Adjustment** dialog box to set the profile.

Grayscale Printing

This function converts the data to monochrome data when printing your document.

Check this check box to print a color document in monochrome.

Preview before printing

Shows what the print result will look like before you actually print the data.

Check this check box to display a preview before printing.

Defaults

Restores all the settings you have changed to their default values.

Clicking this button restores all the settings on the current screen to their default values (factory settings).

Color Adjustment Tab

This tab allows you to adjust the color balance by changing the settings of the **Cyan**, **Magenta**, **Yellow**, **Brightness**, and **Contrast** options.

Preview

Shows the effect of color adjustment.
The color and brightness change when each item is adjusted.

Note

- The graphic is in monochrome when the **Grayscale Printing** check box is checked.

View Color Pattern

Displays a pattern for checking color changes produced by color adjustment.
If you want to display the preview image with a color pattern, check this check box.

Cyan / Magenta / Yellow

Adjusts the strengths of **Cyan**, **Magenta**, and **Yellow**.
Moving the slider to the right makes a color stronger, and moving the slider to the left makes a color weaker.
You can also directly enter a value linked to the slider. Enter a value in the range from -50 to 50.
This adjustment changes the relative amount of ink of each color used, which alters the total color balance of the document. Use your application if you want to change the total color balance significantly. Use the printer driver only if you want to adjust the color balance slightly.

Brightness

Adjusts the brightness of your print. You cannot change the levels of pure white and black. However, the brightness of the colors between white and black can be changed. Moving the slider to the right brightens (dilutes) the colors, and moving the slider to the left darkens (intensifies) the colors. You can also directly enter brightness values that are linked to the slider bar. Enter a value in the range from -50 to 50.

Contrast

Adjusts the contrast between light and dark in the image to be printed.
Moving the slider to the right increases the contrast, moving the slider to the left decreases the contrast.
You can also directly enter a value linked to the slider. Enter a value in the range from -50 to 50.

Matching Tab

Allows you to select the method for adjusting colors to match the type of document to be printed.

Color Correction

Allows you to select **Driver Matching**, **ICM**, or **None** to match the purpose of the print operation.

Driver Matching

With Canon Digital Photo Color, you can print sRGB data with color tints that most people prefer.

ICM

Adjusts the colors by using an ICC profile when printing.

Important

- If the application software is set so that ICM is disabled, **ICM** is unavailable for **Color Correction** and the printer may not be able to print the image data properly.

None

Disables color adjustment with the printer driver. Select this value when you are specifying an individually created printing ICC profile in an application software to print data.

Set the Layout of Printed Documents (Page Setup Tab)

- Page Setup Tab Description
- Setting the Number of Copies and Printing Order

Page Setup Tab Description

The **Page Setup** tab allows you to determine how a document is to be arranged on the paper. Also, this tab allows you to set the number of copies and the order of printing. If the application which created the document has a similar function, set them with the application.

- Settings Preview
- Page Size
- Printer Paper Size
- Copies
- Print from Last Page
- Collate
- Orientation
- Rotate 180 degrees
- Page Layout
- Zoom
- 1-sided/2-sided/Booklet Printing
- Binding Location
- Specify Margin
- Print Options
- Stamp/Background

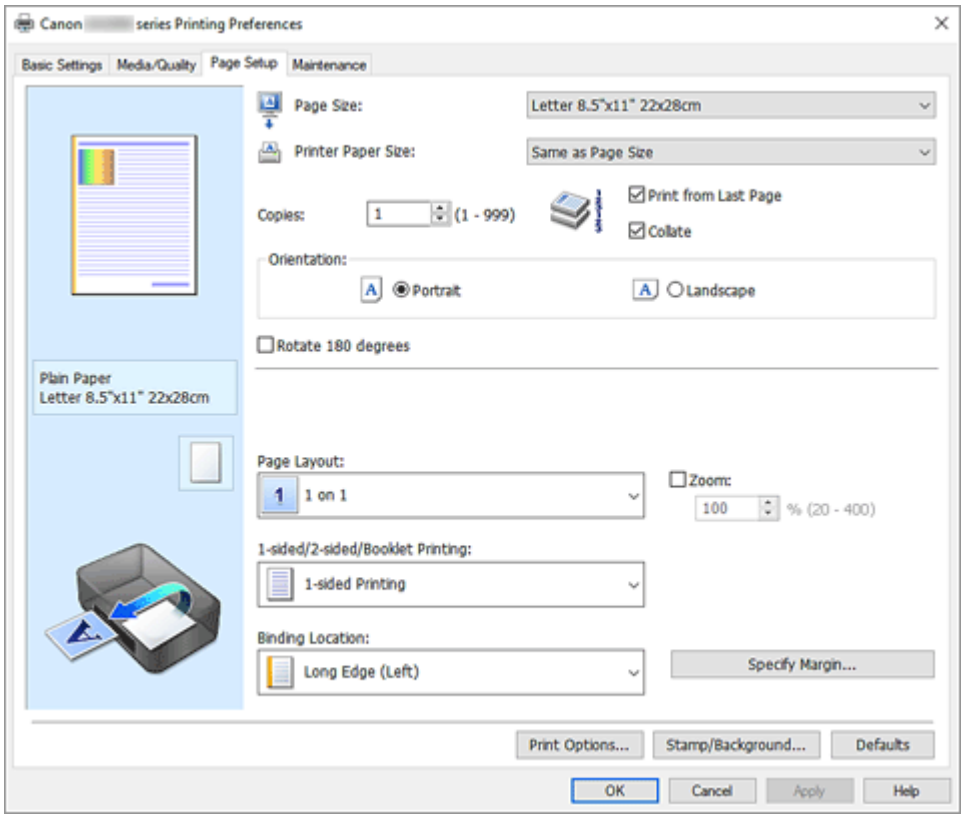

Settings Preview

The paper illustration shows how the original will be laid out on a sheet of paper.
You can check an overall image of the layout.

Page Size

Selects a page size.

Ensure that you select the same page size as you selected within the application.

If you select **Custom...**, the **Custom Paper Size** dialog box opens and allows you to specify any vertical and horizontal dimensions for the paper size.

Printer Paper Size

Selects the size of paper actually loaded into the printer.

The default setting is **Same as Page Size** to perform normal-sized printing.

If you select a paper size that is smaller than the **Page Size**, the document size will be reduced. If you select a paper size that is larger, the document size will be enlarged.

Also if you select **Custom...**, the **Custom Paper Size** dialog box opens and allows you to specify any vertical and horizontal dimensions for the paper size.

Copies

Specifies the number of copies you want to print. You can specify a value from 1 to 999.

Important

- If the application used to create your document has a similar function, specify the number of copies with the application without specifying it here.

Print from Last Page

Check this check box when you want to print from the last page in order. If you do this, you do not need to sort the pages into their correct order after printing.

Uncheck this check box to print your document in normal order, starting from the first page.

Collate

Check this check box to group together the pages of each copy when you want to print multiple copies.

Uncheck this check box when you want to print with all pages of the same page number grouped together.

Important

- When the application software that you used to create the document has the same function, give priority to the printer driver settings. However, if the print results are not acceptable, specify the function settings on the application software. When you specify the number of copies and the printing order with both the application and this printer driver, the number of copies may be multiplied numbers of the two settings or the specified printing order may not be enabled.

Orientation

Selects the printing orientation.

If the application used to create your document has a similar function, select the same orientation that you selected in that application.

Portrait

Prints the document so that its top and bottom positions are unchanged relative to the paper feed direction. This is the default setting.

Landscape

Prints the document by rotating it 90 degrees relative to the paper feed direction.

You can change the rotation direction by going to the **Maintenance** tab, opening the **Custom Settings** dialog box, and then using **Rotate 90 degrees left when orientation is [Landscape]** check box.

To rotate the document 90 degrees to the left when printing, select the **Rotate 90 degrees left when orientation is [Landscape]** check box.

Rotate 180 degrees

Prints the document by rotating it 180 degrees against the paper feed direction.

The width of print area and the amount of extension that are configured in other application software will be reversed vertically and horizontally.

Page Layout

Selects the size of the document you want to print and the type of printing.

1 on 1 to 16 on 1

Multiple pages of document can be printed on one sheet of paper. To change the page order, click **Preferences...**. In the **Page Layout Printing** dialog box that appears, specify **Page Order**.

Poster (1 x 2) to Poster (4 x 4)

This function enables you to enlarge the image data and divide the enlarged data into several pages to be printed.

You can also glue together these sheets of paper to create large printed matter, such as a poster.

Preferences...

Opens the **Poster Printing** dialog box.

Click this button to set details on poster printing.

Zoom

Specifies an enlargement or reduction ratio for the document you want to print.

1-sided/2-sided/Booklet Printing

1-sided Printing

Select when performing single-sided printing.

2-sided Printing

Select when performing duplex printing.

Automatic

Selects whether duplex printing is to be performed automatically or manually.

To perform duplex printing manually, uncheck this check box.

Booklet Printing

The booklet printing function allows you to print data for a booklet. Data is printed on both sides of the paper. This type of printing ensures that pages can be collated properly, in page number order, when the printed sheets are folded and stapled at the center.

Automatic

Selects whether duplex printing is to be performed automatically or manually.

To perform duplex printing manually, uncheck this check box.

Preferences...

Opens the **Booklet Printing** dialog box. Click this button to set details on booklet printing.

Binding Location

Selects the stapling margin position.

The printer analyzes the **Orientation** and **Page Layout** settings, and automatically selects the best stapling margin position. Check **Binding Location**, and select from the list to change it. To specify the width of the binding margin, set it from the **Page Setup** tab.

Specify Margin...

Opens the **Specify Margin** dialog box. You can specify the width of the margin.

Print Options...

Opens the **Print Options** dialog box.

Changes detailed printer driver settings for print data that is sent from applications.

Stamp/Background...

Opens the **Stamp/Background** dialog box.

The **Stamp** function allows you to print a stamp text or a bitmap over or behind document data. It also allows you to print date, time and user name. The **Background** function allows you to print a light illustration behind the document data.

Depending on the environment, **Stamp** and **Background** may not be available.

Defaults

Restores all the settings you have changed to their default values.

Clicking this button restores all the settings on the current screen to their default values (factory settings).

Custom Paper Size dialog box

This dialog box allows you to specify the size (width and height) of the custom paper.

Units

Select the unit for entering a user-defined paper size.

Paper Size

Specifies the **Width** and the **Height** of the custom paper. Measurement is shown according to the units specified in **Units**.

Page Layout Printing dialog box

This dialog box allows you to select the number of document pages to be placed on one sheet of paper, the page order, and whether a page border line is to be printed around each document page.
The settings specified in this dialog box can be confirmed in the settings preview on the printer driver.

Page Order

Specifies the document orientation to be printed on a sheet of paper.

Page Border

Prints a page border line around each document page.

Check this check box to print the page border line.

Exclude single page documents from Page Layout Printing

If you add a checkmark, single-page documents are printed on a single sheet without performing Page Layout Printing.

Poster Printing dialog box

This dialog box allows you to select the size of the image to be printed. You can also make settings for cut lines and paste markers which are convenient for pasting together the pages into a poster.
The settings specified in this dialog box can be confirmed in the settings preview on the printer driver.

Print "Cut/Paste" in margins

Specifies whether to print the words "Cut" and "Paste" in the margins. These words serve as guidelines for pasting together the pages into a poster.
Check this check box to print the words.

Note

- Depending on the environment of the printer driver you are using, this function may not be available.

Print "Cut/Paste" lines in margins

Specifies whether to print cut lines that serve as guidelines for pasting together the pages into a poster.
Check this check box to print the cut lines.

Print page range

Specifies the printing range. Select **All** under normal circumstances.
Select **Pages** to specify a specific page or range.

Note

- If some of the pages have not been printed well, specify the pages that do not need to be printed by clicking them in the settings preview of the **Page Setup** tab. Only the pages shown on the screen will be printed this time.

Booklet Printing dialog box

This dialog box allows you to set how to bind the document as a booklet. Printing only on one side and printing a page border, can also be set in this dialog box.
The settings specified in this dialog box can be confirmed in the settings preview on the printer driver.

Preview Icon

Shows the settings made on the **Booklet Printing** dialog box.
You can check what the document will look like when printed as a booklet.

Margin for stapling

Specifies which side of the booklet is to be stapled.

Insert blank page

Selects whether to print the document on one side or both sides of the booklet.
Check this check box to print the document on one side of the booklet and select the side to be left blank from the list.

Margin

Specifies the width of the stapling margin.
The specified width becomes the stapling margin from the center of the sheet.

Page Border

Prints a page border line around each document page.
Check this check box to print the page border line.

Specify Margin dialog box

This dialog box allows you to specify the margin width for the side to be stapled. If a document does not fit on one page, the document is reduced when printed.

Margin

Specifies the width of the stapling margin.
The width of the side specified by **Binding Location** becomes the stapling margin.

Print Options dialog box

Makes changes to print data that is sent to the printer.

Depending on the environment, this function may not be available.

Disable ICM required from the application software

Disables the ICM function required from the application software.
When an application software uses Windows ICM to print data, unexpected colors may be produced or the printing speed may decrease. If these problems occur, checking this check box may resolve the problems.

Important

- Uncheck this check box under normal circumstances.
- This function does not work when **ICM** is selected for **Color Correction** on the **Matching** tab of the **Manual Color Adjustment** dialog box.

Disable the color profile setting of the application software

Checking this check box disables information in the color profile that was set on the application software.
When the information in the color profile set on the application software is output to the printer driver, the print result may contain unexpected colors. If this happens, checking this check box may resolve the problem.

Important

- Uncheck this check box under normal circumstances.
- Even when this check box is checked, only some of the information in the color profile is disabled, and the color profile can still be used for printing.

Disable the paper source setting of the application software

Disables the paper feed method that is set by the application.
With some applications such as Microsoft Word, the data may be printed with a feed method that differs from the printer driver setting. In this case, check this function.

Important

- When this function is enabled, normally the paper feeding method cannot be changed from the Canon IJ Preview.

Ungroup Papers

Sets the display method of **Media Type**, **Page Size**, and **Printer Paper Size**.
To display the items separately, select the check box.
To display the items as a group, clear the check box.

Do not allow application software to compress print data

Compression of the application software print data is prohibited.

If the print result has missing image data or unintended colors, selecting this check box may improve the condition.

Important

- Uncheck this check box under normal circumstances.

Print after creating print data by page

The print data is created in page units, and printing starts after the processing of one page of print data is complete.

If a printed document contains unintended results such as streaks, selecting this check box may improve the results.

Important

- Uncheck this check box under normal circumstances.

Print barcodes clearly

If you add a checkmark, it might solve readability issues with barcodes.

Important

- 2D barcodes are not supported.
- Print speed might become slower.
- The desired effectiveness might not be achieved.

Prevention of Print Data Loss

You can reduce the size of the print data that was created with the application software and then print the data.

Depending on the application software being used, the image data may be cut off or may not be printed properly. In such cases, select **On**. If you will not be using this function, select **Off**.

Important

- When using this function, the print quality may drop depending on the print data.

Unit of Print Data Processing

Selects the processing unit of the print data to be sent to the printer.

Select **Recommended** under normal circumstances.

Important

- A large amount of memory may be used for certain settings.
  Do not change the setting if your computer has a small amount of memory.

Print charts and diagrams in documents more vividly (plain paper)

If you select **Use Printer Settings**, printing is performed according to the printer's settings.

To see your printer settings, see "Printing preferences".

Specify print start position

Select this to make fine adjustments to the print start position.

Click **Set...** to display the **Print Start Position** dialog box and configure the print start position.

Stamp/Background dialog box

Depending on the environment, **Stamp** and **Background** may not be available.

The **Stamp/Background** dialog box allows you to print a stamp and/or background over or behind the document pages. In addition to the pre-registered ones, you can register and use your original stamp or background.

Stamp

Stamp printing is a function that prints a stamp over a document.
Check this check box and select a title from the list to print a stamp.

Define Stamp...

Opens the **Stamp Settings** dialog box.
You can check the details of a selected stamp or save a new stamp.

Place stamp over text

Sets how the stamp is to be printed over the document.
Check the **Stamp** check box to enable this.
Check this check box to print a stamp over the printed document page. The printed data may be hidden behind the stamp.
Uncheck this check box to print the document data over the stamp. The printed data will not be hidden behind the stamp. However, the sections of the stamp that are overlapped by the document may be hidden.

Stamp first page only

Selects whether the stamp is to be printed on the first page only or on all pages when the document has two or more pages.
Check the **Stamp** check box to enable this.
Check this check box to print a stamp on the first page only.

Background

Background printing is a function that allows you to print an illustration or a similar object (bitmap) behind the document.
Check this check box to print a background and select a title from the list.

Select Background...

Opens the **Background Settings** dialog box.
You can register a bitmap as a background, and change layout method and intensity of the selected background.

Background first page only

Selects whether to print the background on the first page only or print on all pages when the document has two or more pages.
Check the **Background** check box to enable this.
Check this check box to print a background on the first page only.

Stamp Tab

The Stamp tab allows you to set the text and bitmap file (.bmp) to be used for a stamp.

Preview Window

Shows the status of the stamp configured in each tab.

Stamp Type

Specifies the stamp type.

Select **Text** to create a stamp with characters. Select **Bitmap** to create with a bitmap file. Select **Date/Time/User Name** to display the creation date/time and user name of the printed document.

The setting items in the **Stamp** tab change depending on the selected type.

- For **Text** registration, the characters must already be entered in **Stamp Text**. If necessary, change the **TrueType Font**, **Style**, **Size**, and **Outline** settings. You can select the color of the stamp by clicking **Select Color...**.
- For **Bitmap**, click **Select File...** and select the bitmap file (.bmp) to be used. If necessary, change the settings of the **Size** and **Transparent white area**.
- For **Date/Time/User Name**, the creation date/time and user name of the printed object are displayed in **Stamp Text**. If necessary, change the settings of **TrueType Font**, **Style**, **Size**, and **Outline**. You can select the color of the stamp by clicking **Select Color...**.

When **Stamp Type** is **Text** or **Date/Time/User Name**

Stamp Text

Specifies the stamp text string.

Up to 64 characters can be entered.

For **Date/Time/User Name**, the creation date/time and user name of the printed object are displayed in **Stamp Text**.

TrueType Font

Selects the font for the stamp text string.

Style

Selects the font style for the stamp text string.

Size

Selects the font size for the stamp text string.

Outline

Selects a frame that encloses the stamp text string.

If a large font size is selected for **Size**, characters may extend outside of the stamp border.

Color/Select Color...

Shows the current color for the stamp.

To select a different color, click **Select Color...** to open the **Color** dialog box, and select or create a color you wish to use as a stamp.

When **Stamp Type** is **Bitmap**

File

Specifies the name of the bitmap file to be used as the stamp.

Select File...

Opens the dialog box to open a file.

Click this button to select a bitmap file to be used as a stamp.

Size

Adjusts the size of the bitmap file to be used as a stamp.

Moving the slider to the right increases the size, moving the slider to the left decreases the size.

Transparent white area

Specifies whether to make white-filled areas of the bitmap transparent.
Check this check box to make white-filled areas of the bitmap transparent.

Note

- Click **Defaults** to set **Stamp Type** to text, **Stamp Text** to blank, **TrueType Font** to Arial, **Style** to Regular, **Size** to 36 points, **Outline** unchecked, and **Color** to gray with the RGB values (192, 192, 192).

Placement Tab

The Placement tab allows you to set the position where the stamp is to be printed.

Preview Window

Shows the status of the stamp configured in each tab.

Position

Specifies the stamp position on the page.
Selecting **Custom** from the list allows you to enter values for the **X-Position** and **Y-Position** coordinates directly.
You can also change the stamp position by dragging the stamp in the preview window.

Rotation

Specifies the angle of rotation for the stamp. The angle can be set by entering the number of degrees.
Negative values rotate the stamp clockwise.

Note

- **Rotation** is enabled only when **Text** or **Date/Time/User Name** is selected for **Stamp Type** on the **Stamp** tab.

Note

- Click **Defaults** to set the stamp position to **Center** and the rotation to "0."

Save settings Tab

The **Save settings** tab allows you to register a new stamp or delete an unnecessary stamp.

Title

Enter the title to save the stamp you created.
Up to 64 characters can be entered.

Note

- Spaces, tabs, and returns cannot be entered at the beginning or end of a title.

Stamps

Shows a list of saved stamp titles.
Specify a title to display the corresponding stamp in **Title**.

Save/Save overwrite

Saves the stamp.
Enter a title in **Title**, and then click this button.

Delete

Deletes an unnecessary stamp.

Specify the title of an unnecessary stamp from the **Stamps** list, and click this button.

Background Tab

The Background tab allows you to select a bitmap file (.bmp) to be used as a background or determine how to print the selected background.

Preview Window

Shows the status of the bitmap set on the **Background** tab.

File

Specifies the name of the bitmap file to be used as the background.

Select File...

Opens the dialog box to open a file.

Click this button to select a bitmap file (.bmp) to be used as the background.

Layout Method

Specifies how the background image is to be placed on the paper.

When **Custom** is selected, you can set coordinates for **X-Position** and **Y-Position**.

You can also change the background position by dragging the image in the preview window.

Intensity

Adjusts the intensity of the bitmap to be used as a background.

Moving the slider to the right increases the intensity, and moving the slider to the left decreases the intensity. To print the background at the original bitmap intensity, move the slider to the rightmost position.

Note

- Depending on the environment, this function may not be available.
- Click **Defaults** to set **File** to blank, **Layout Method** to **Fill page**, and the **Intensity** slider to the middle.

Save settings Tab

The **Save settings** tab allows you to register a new background or delete an unnecessary background.

Title

Enter the title to save the background image you specified.

Up to 64 characters can be entered.

Note

- Spaces, tabs, and returns cannot be entered at the beginning or end of a title.

Backgrounds

Shows a list of registered background titles.

Specify a title to display the corresponding background in **Title**.

Save/Save overwrite

Saves the image data as a background.

After inserting the **Title**, click this button.

Delete

Deletes an unnecessary background.

Specify the title of an unnecessary background from the **Backgrounds** list, and then click this button.

Setting the Number of Copies and Printing Order

You can also set the number of copies on the **Basic Settings** tab.

1. Open the printer driver setup window

2. Specify the number of copies to be printed

   For **Copies** on the **Page Setup** tab, specify the number of copies to be printed.

3. Specify the print order

   Check the **Print from Last Page** check box when you want to print from the last page in order, and uncheck the check box when you want to print from the first page.
   Check the **Collate** check box when you are printing multiple copies of a document and want to print out all pages in each copy together. Uncheck this check box when you want to print all pages with the same page number together.

   - **Print from Last Page**: ☑ /**Collate**: ☑

     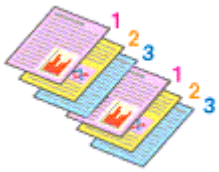

   - **Print from Last Page**: ☐ /**Collate**: ☑

     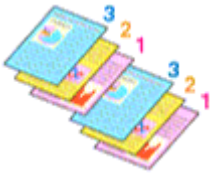

   - **Print from Last Page**: ☑ /**Collate**: ☐

     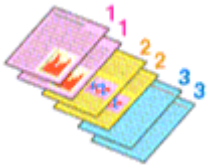

   - **Print from Last Page**: ☐ /**Collate**: ☐

4. Click **OK**

   When you perform print, the specified number of copies will be printed with the specified printing order.

Important

- When the application software that you used to create the document has the same function, specify the settings on the printer driver. However, if the print results are not acceptable, specify the function settings on the application software. When you specify the number of copies and the printing order with both the application software and this printer driver, the number of copies may be multiplied numbers of the two settings or the specified printing order may not be enabled.

Note

- By setting both **Print from Last Page** and **Collate**, you can perform printing so that papers are collated one by one starting from the last page.

Page Layout Printing

The page layout printing function allows you to print more than one page image on a single sheet of paper.

1. Open the printer driver setup window

2. Set page layout printing

   Select a page layout number from **1 on 1** to **16 on 1** from the **Page Layout** list on the **Page Setup** tab.
   The current settings are displayed in the settings preview on the left side of the printer driver.

3. Select the print paper size

   Select the size of the paper loaded in the printer from the **Printer Paper Size** list.

4. Set the number of pages to be printed on one sheet and the page order

   If necessary, click **Preferences...**, specify the following settings in the **Page Layout Printing** dialog box, and click **OK**.

   Page Order
   To change the page arrangement order, select a placement method from the list.

   Page Border
   To print a page border around each document page, check this check box.

   Exclude single page documents from Page Layout Printing
   If you add a checkmark, single-page documents are printed on a single sheet without performing Page Layout Printing.

5. Complete the setup

   Click **OK** on the **Page Setup** tab.
   When you perform print, the specified number of pages will be arranged on each sheet of paper in the specified order.

Duplex Printing

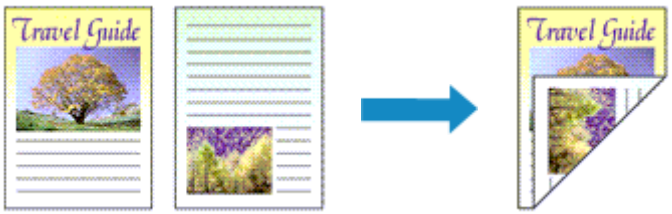

You can also set duplex printing in the **Basic Settings** tab.

Performing Automatic Duplex Printing

You can perform the duplex printing without having to turn over the paper.

1. Open the printer driver setup window

2. Set automatic duplex printing

   Select **2-sided Printing** for **1-sided/2-sided/Booklet Printing** on the **Page Setup** tab. Confirm that **Automatic** is checked.

3. Select the layout

   Select the layout you want to use from the **Page Layout** list.

4. Specify the side to be stapled

   The best **Binding Location** is selected automatically from the **Orientation** and **Page Layout** settings. To change the setting, select another stapling side from the **Binding Location** list.

5. Set the margin width

   If necessary, click **Specify Margin...** and set the margin width, and then click **OK**.

6. Complete the setup

   Click **OK** on the **Page Setup** tab.
   When you perform print, duplex printing will be started.

Performing Duplex Printing Manually

You can perform the duplex printing manually.

1. Open the printer driver setup window

2. Set duplex printing

Select **2-sided Printing** from **1-sided/2-sided/Booklet Printing** on the **Page Setup** tab. Uncheck the **Automatic** check box.

3. Select the layout

   Select the layout you want to use from the **Page Layout** list.

4. Specify the side to be stapled

   The best **Binding Location** is selected automatically from the **Orientation** and **Page Layout** settings. To change the setting, select another stapling side from the **Binding Location** list.

5. Set the margin width

   If necessary, click **Specify Margin...** and set the margin width, and then click **OK**.

6. Complete the setup

   Click **OK** on the **Page Setup** tab.
   When you perform print, the document is first printed on one side of a sheet of paper. After one side is printed, reload the paper correctly according to the message.
   Then tap **Start print** on the printer operation panel to print the opposite side.

Important

- Automatic duplex printing can be performed only when one of the following paper sizes is selected from **Page Size** on the **Page Setup** tab.
  - **Letter 8.5"x11" 22x28cm**, **A4**
- After printing the front page, there is an ink drying wait time before starting to print the back page (Operation stops temporarily). Do not touch the paper during this time.

Perform maintenance or settings (Maintenance tab)

- **Maintenance Tab Description**
- **Cleaning the Print Heads**
- **Adjusting Print Head Position Automatically**
  - Adjusting Print Head Position Manually

Maintenance Tab Description

The **Maintenance** tab allows you to change the printer settings or check its status.

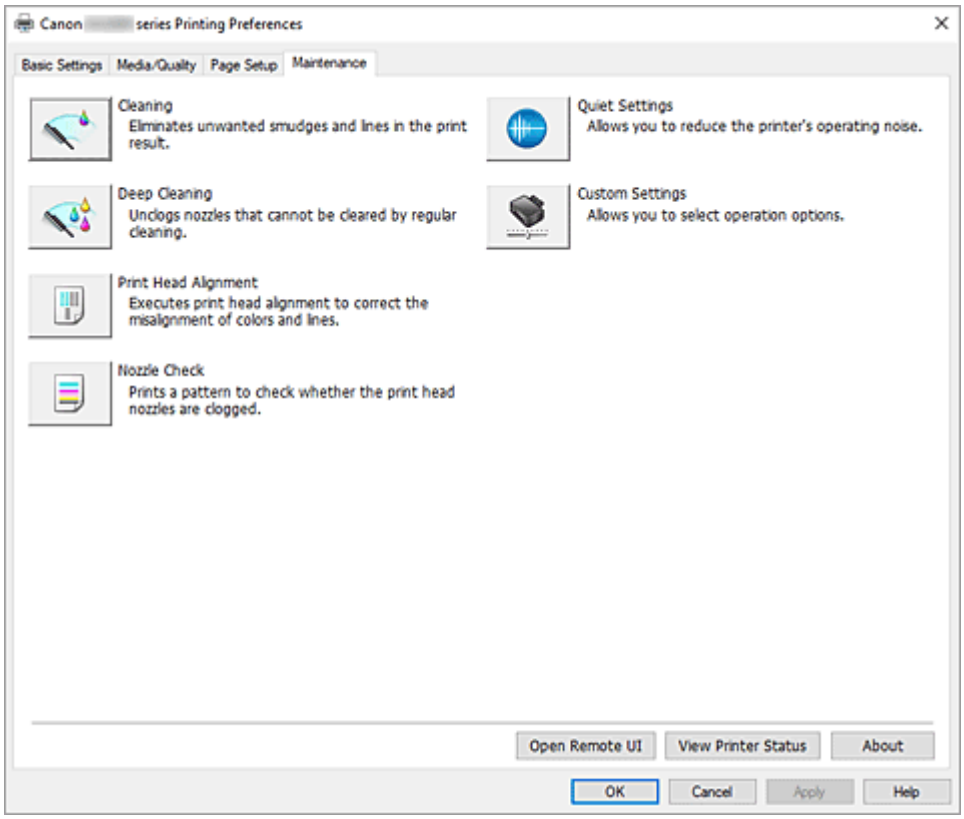

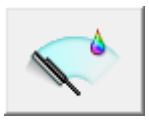

Cleaning

Performs print head Cleaning.

The print head Cleaning function allows you to clear up clogged print head nozzles.

Perform print head Cleaning if printing results are not satisfactory or if a specific color fails to print, even though there is enough ink.

Deep Cleaning

Performs Deep Cleaning.

Perform Deep Cleaning when two Cleaning attempts do not resolve the print head problem.

Note

- **Deep Cleaning** consumes a larger amount of ink than **Cleaning**.
  Cleaning the print heads frequently will rapidly deplete your printer's ink supply. Perform Cleaning only when necessary.

Ink Group

When you click **Cleaning** or **Deep Cleaning**, the **Ink Group** window is displayed.

Selects the ink group that you want to clean the print head for.

Click **Initial Check Items** to display the items that you need to check before you perform Cleaning or Deep Cleaning.

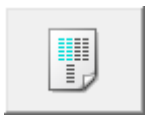

Print Head Alignment

Adjust the print head position.

Nozzle Check

Prints a Nozzle Check pattern.

Perform this function if printing becomes faint or a specific color fails to print. Print a Nozzle Check pattern, and check whether the print head is working properly.

If the print result for a specific color is faint, or if there are any unprinted sections, click **Cleaning** to clean the print head.

To display a list of items that you should check before printing the Nozzle Check pattern, click **Initial Check Items**.

Quiet Settings

Opens the **Quiet Settings** dialog box.

Quiet Settings dialog box allows you to specify a setting that reduces the operating noise of the printer. This mode comes in handy when the operating noise of the printer becomes a concern, such when printing at night. Perform this operation when you want to change the quiet mode setting.

Note

- If the printer is off or if communication between the printer and the computer is disabled, an error message may appear because the computer cannot collect the printer status.
  If this happens, click **OK** to display the most recent settings specified on your computer.

Custom Settings

Opens the **Custom Settings** dialog box.

Perform this function to change the settings of this printer.

Note

- If the printer is off or if communication between the printer and the computer is disabled, an error message may appear because the computer cannot collect the printer status.
  If this happens, click **OK** to display the most recent settings specified on your computer.

Open Remote UI

Menu for performing printer maintenance and changing settings.

View Printer Status

Starts the Canon IJ Status Monitor.

Perform this function when you want to check the printer status and how a print job is proceeding.

About

Opens the **About** dialog box.

The version of the printer driver, plus a copyright notice, can be checked.

In addition, the language to be used can be switched.

Initial Check Items (Cleaning / Deep Cleaning)

Before running **Cleaning** or **Deep Cleaning**, check that the printer power is on.
Check the following:

- Is there ink remaining?
- Does the maintenance cartridge have enough available space?

Initial Check Items (Nozzle Check)

Before performing **Nozzle Check**, check that the printer power is on.
Check the following:

- Is there ink remaining?

Quiet Settings dialog box

When you click **Quiet Settings**, the **Quiet Settings** dialog box is displayed.
Quiet Settings dialog box allows you to specify a setting that reduces the operating noise of the printer.
Select when you wish to reduce the operating noise of the printer at night, etc.
Using this function may lower the print speed.

Do not use quiet mode

Select this option when you wish to use the printer with volume of normal operating noise.

Always use quiet mode

Select this option when you wish to reduce the operating noise of the printer.

Use quiet mode during specified hours

Select this option when you wish to reduce the operating noise of the printer during a specified period of time.
Set the **Start time** and the **End time** of the quiet mode you wish to be activated. If both are set to the same time, the quiet mode will not function.

Important

- You can set the quiet mode from the operation panel of the printer, the **Maintenance** tab, or ScanGear (scanner driver).
  No matter how you use to set the quiet mode, the mode is applied when you perform operations from the operation panel of the printer or printing and scanning from the computer.
- Quiet Mode is not applied to operations (copy, direct print, etc.) performed directly from the printer even during times set for **Use quiet mode during specified hours**.

Custom Settings dialog box

When you click **Custom Settings**, the **Custom Settings** dialog box is displayed.
If necessary, switch between various modes of printer operation.

Rotate 90 degrees left when orientation is [Landscape]

On the **Page Setup** tab, you can change the rotation direction of the **Landscape** in the **Orientation**.
To rotate the print data 90 degrees to the right during printing, uncheck this check box.

Important

- Do not change this setting while the print job is displayed in the print wait list. Otherwise, characters may be omitted or the layout may become corrupt.

Note

- If **Envelope Com 10**, **Envelope DL**, **Yougata 4 4.13"x9.25"**, **Yougata 6 3.86"x7.48"**, **Envelope C5**, or **Envelope Monarch 3.88"x7.5" 98.4x190.5mm** is selected for **Page Size** on the **Page Setup** tab, the printer rotates the paper 90 degrees to the left to print, regardless of the **Rotate 90 degrees left when orientation is [Landscape]** setting.

Do not detect mismatched paper settings when printing from a computer

When you print documents from your computer, the paper settings in the printer driver and the paper information registered on the printer do not match, this setting disables the message display and allows you to continue printing.
To disable detection of paper setting mismatches, check this check box.

Align heads manually

Usually, the **Print Head Alignment** function in the **Maintenance** tab is set to automatic head alignment, but you can change it to manual head alignment.
If the printing results of automatic Print Head Alignment are not satisfactory, perform manual head alignment.
Check this check box to change to manual head alignment.

Ink Drying Wait Time

You can set the length of the printer rest time until printing of the next page begins. Moving the slider to the right increases the pause time, and moving the slider to the left decreases the time.
If the paper gets stained because the next page is ejected before the ink on the printed page dries, increase the ink drying wait time.

About dialog box

When you click **About**, the **About** dialog box is displayed.
This dialog box displays the version, copyright, and module list of the printer driver. You can select the language to be used and switch the language displayed in the setup window.

Modules

Lists the printer driver modules.

Language

Specifies the language you wish to use in the printer driver setup window.

Important

- If the font for displaying the language of your choice is not installed in your system, the characters will be garbled.

Allow Google Analytics to send information

To stop sending information, uncheck this check box.

The check box appears only if a user with administrator privileges is logged on. If information is not provided, the check box will not appear.

Related Topics

- Cleaning the Print Heads
- Adjusting Print Head Position Automatically
- Printing a Nozzle Check Pattern
- Reducing the Printer Noise
- Changing the Printer Operation Mode

Cleaning the Print Heads

The print head Cleaning and Deep Cleaning functions allow you to clear up clogged print head nozzles. Perform print head Cleaning if printing results are not satisfactory or if a specific color fails to print, even though there is enough ink.

Cleaning

1. Open the **Maintenance** Tab

2. Click **Cleaning**

   When the **Print Head Cleaning** dialog box opens, select the ink group for which Cleaning is to be performed.

   Click **Initial Check Items** to display the items you need to check before performing Cleaning.

3. Perform Cleaning

   Check that the printer is on and then click **Start**.

   Print Head Cleaning starts.

4. Complete Cleaning

   Click **OK** when the confirmation message is displayed.
   The **Nozzle Check** dialog box will open.

5. Check the results

   To check whether the print quality has improved, click **Print Check Pattern**. To cancel the check process, click **Cancel**.

   If cleaning the head once does not resolve the print head problem, clean it once more.

Important

- **Cleaning** consumes a small amount of ink.
  Cleaning the print head frequently will rapidly deplete your printer's ink supply. Perform Cleaning only when necessary.

Deep Cleaning

Deep Cleaning is more thorough than Cleaning. Perform Deep Cleaning when two **Cleaning** attempts do not resolve the print head problem.

1. Open the **Maintenance** Tab

2. Click **Deep Cleaning**

   When the **Deep Cleaning** dialog box opens, select the ink group for which Deep Cleaning is to be performed.

   Click **Initial Check Items** to display the items you need to check before performing Deep Cleaning.

3. Perform Deep Cleaning

   Check that the printer is on and then click **Start**.
   Click **OK** when the confirmation message appears.

   Print head Deep Cleaning starts.

4. Complete Deep Cleaning

   Click **OK** when the confirmation message is displayed.
   The **Nozzle Check** dialog box will open.

5. Check the results

   To check whether the print quality has improved, click **Print Check Pattern**. To cancel the check process, click **Cancel**.

Important

- **Deep Cleaning** consumes a larger amount of ink than **Cleaning**.
  Cleaning the print head frequently will rapidly deplete your printer's ink supply. Perform Deep Cleaning only when necessary.

Related Topic

➡ Printing a Nozzle Check Pattern

Adjusting Print Head Position Automatically

Print Head Alignment corrects the installation positions of the print head and improves misalignment of colors and lines.

This printer supports two head alignment methods: automatic head alignment and manual head alignment. Normally, the printer is set for automatic head alignment, but if the printing results are not satisfactory, such as if the borders are not aligned, perform manual head alignment.

The procedure for performing automatic Print Head Alignment is as follows:

Important

- A pattern will be printed for head alignment. Do not open the scanning unit / cover while printing is in progress.

Print Head Alignment

1. Open the **Maintenance** Tab

2. Click **Print Head Alignment**

   The **Print Head Alignment** dialog box opens.

3. Load paper in printer

   Load one sheet of A4 size or Letter size plain paper into the cassette.

   Note

   - The number of sheets to be used differs when you select the manual head alignment.

4. Perform head alignment

   Check that the printer is on and then click **Start**.
   Follow the instruction in the message.

   Note

   - Wait until printing ends before performing other operations. Printing takes about 1 minutes to complete.

Note

- In the **Print Head Alignment** dialog box, click **Print Alignment Value** to print the current settings so that you can check the settings.

Adjusting Print Head Position Manually

Print Head Alignment corrects the installation positions of the print head and improves misalignment of colors and lines.

This printer supports two head alignment methods: automatic head alignment and manual head alignment. Normally, the printer is set for automatic head alignment, but if the printing results are not satisfactory, such as if the borders are not aligned, perform manual head alignment.

The procedure for performing manual Print Head Alignment is as follows:

Important

- Printing is required for adjusting the position of the print head. Do not open the scanning unit / cover while printing is in progress; otherwise, printing will stop.

Print Head Alignment

1. Open the **Maintenance** Tab

2. Check that the printer power is on, and then click **Custom Settings**

   The **Custom Settings** dialog box opens.

   Note

   - If the printer is off or if communication between the printer and the computer is disabled, an error message may appear because the computer cannot collect the printer status.
     If this happens, click **OK** to display the most recent settings specified on your computer.

3. Switch head alignment to manual

   Check the **Align heads manually** check box.

4. Apply the settings

   Click **OK** and when the confirmation message appears, click **OK**.

5. Click **Print Head Alignment**

   The **Print Head Alignment** dialog box opens.

6. Load paper in printer

   Load two sheets of A4 size or Letter size plain paper into the cassette.

7. Perform head alignment

   Click **Start**.
   Follow the instruction in the message.

8. Check printed pattern

In each entry field, enter the number of the pattern with the least prominent streaks or stripes from among the printed patterns.
You can also enter numbers into the entry fields automatically by clicking relevant pattern in the preview.

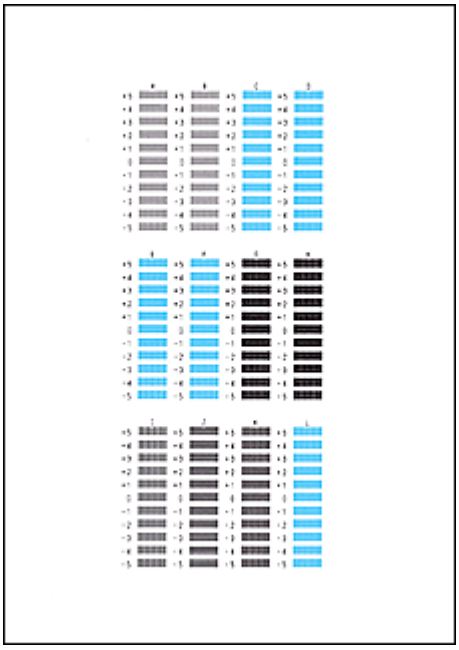

After completing the entries, click **OK**.

Note

- If the patterns are not uniform, select the pattern with the least prominent vertical streaks.

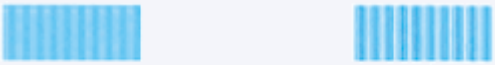

(A) Less prominent vertical streaks
(B) More prominent vertical streaks

- If the patterns are not uniform, select the pattern with the least prominent horizontal stripes.

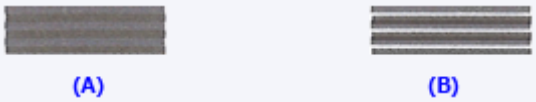

(A) Less prominent horizontal stripes
(B) More prominent horizontal stripes

9. Check the displayed message and click **OK**

The second pattern is printed.

10. Check printed patterns

In each entry field, enter the number of the pattern with the least prominent stripes or streaks from among the printed patterns.
You can also enter numbers into the entry fields automatically by clicking relevant pattern in the preview.

After completing the entries, click **OK**.

Note

- If the patterns are not uniform, select the pattern with the least prominent horizontal stripes.

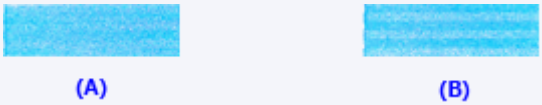

(A) Less prominent horizontal stripes
(B) More prominent horizontal stripes

- If the patterns are not uniform, select the pattern with the least prominent vertical streaks.

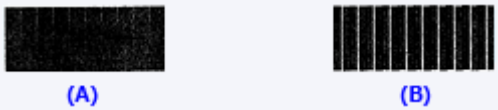

(A) Less prominent vertical streaks
(B) More prominent vertical streaks

11. Complete head position adjustment

Click **OK**.
The adjustment of the head position is complete.

Note

- To print and check the current setting, open the **Print Head Alignment** dialog box, and click **Print Alignment Value**.

Printing a Nozzle Check Pattern

The Nozzle Check function allows you to check whether the print head is working properly by printing a Nozzle Check pattern. Print the pattern if printing results are not satisfactory, or if a specific color fails to print.

Nozzle Check

1. Open the **Maintenance** Tab

2. Click **Nozzle Check**

   The **Nozzle Check** dialog box opens.
   Click **Initial Check Items** to display the items that you need to check before printing the Nozzle Check pattern.

3. Load paper in the printer

   Load one sheet of A4 size or Letter size plain paper into the cassette.

4. Print a Nozzle Check pattern

   Check that the printer is on and then click **Print Check Pattern**.
   The Nozzle Check pattern will be printed.

   Click **OK** when the confirmation message appears.
   The **Pattern Check** dialog box opens.

5. Check the print result

   Check the print result. If the print result is normal, click **Exit**.

   If the print result is smudged or if there are any unprinted sections, click **Cleaning** to clean the print head.

Related Topic

➡ Cleaning the Print Heads

Overview of the Printer Driver

- **Canon IJ Printer Driver**
  - Opening Printer Driver's Setup Screen
- **Canon IJ Status Monitor**
- **Instructions for Use (Printer Driver)**

Canon IJ Printer Driver

The Canon IJ printer driver (simply called printer driver below) is software that you install onto your computer so that it can communicate with the printer.

The printer driver converts the print data created by your application software into data that your printer can understand, and sends the converted data to the printer.

Because different models support different print data formats, you need a printer driver for the specific model you are using.

Installing the Printer Driver

To install the printer driver, install the driver from the Setup CD-ROM or our website.

Specifying the Printer Driver

To specify the printer driver, open the **Print** dialog box of the application software you are using, and select "Canon XXX" (where "XXX" is your model name).

Displaying the Manual from the Printer Driver

To display the description of a setup tab from the printer driver's setup screen, click **Help** on that tab.

Related Topic

➡ Opening Printer Driver's Setup Screen

Opening Printer Driver's Setup Screen

You can display the printer driver's setup screen from your application software or by clicking the printer icon.

Displaying the Printer Driver's Setup Screen from Your Application Software

Perform this procedure to set up the print settings during printing.

1. Select print command from application software

   The **Print** command can generally be found in the **File** menu.

2. Select your printer model, and click **Preferences** (or **Properties**)

   The printer driver's setup screen appears.

Note

- Depending on the application software you are using, the command and menu names, and the number of steps may vary. For details, refer to the operating instructions of your application software.

Displaying the Printer Driver's Setup Screen by Clicking the Printer Icon

From the setup screen you can perform printer maintenance operations such as print head cleaning, or set print settings to be shared by all application software.

The following instructions are shown using screens displayed in Windows 11 as an example.

1. Select the **Settings** -> **Bluetooth & devices** -> **Printers & scanners**

2. Click your model name icon, and then select **Printing preferences** from the displayed menu

   The printer driver setup window appears.

   Note

   - If you're using Windows 10 or earlier, follow the steps below to display the printer driver settings screen.
     1. Select the **Control Panel** -> **Hardware and Sound** -> **Devices and Printers**
     2. Right-click your model name icon, and then select **Printing preferences** from the displayed menu

     Opening the printer driver setup window through **Printer properties** displays such tabs regarding the Windows functions as the **Ports** (or **Advanced**) tab. Those tabs do not appear when opening through **Printing preferences** or application software. For tabs regarding Windows functions, refer to the user's manual for the Windows.

Canon IJ Status Monitor

The Canon IJ Status Monitor displays the printer status and the printing progress. The printer status is shown by the icons and messages in the status monitor.

Launching the Canon IJ Status Monitor

The Canon IJ Status Monitor launches automatically when print data is sent to the printer. When launched, the Canon IJ Status Monitor appears as a button on the task bar.

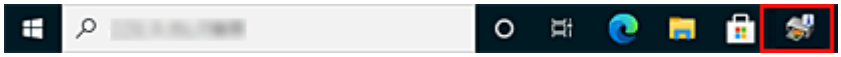

Click the button of the status monitor displayed on the task bar. The Canon IJ Status Monitor appears.

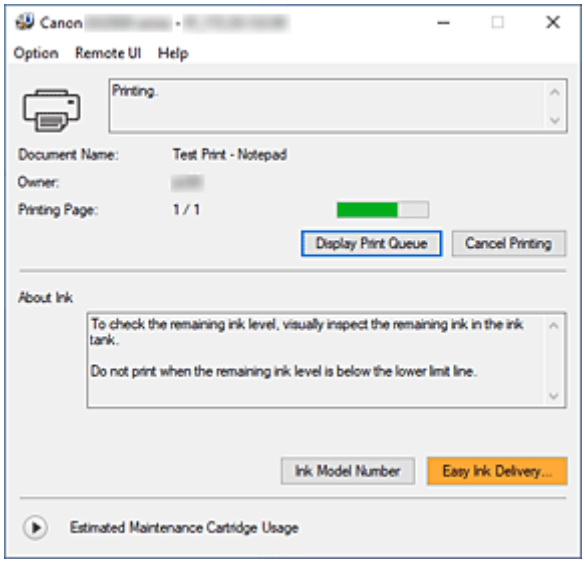

Note

- To open the Canon IJ Status Monitor when the printer is not printing, open the printer driver setup window and click **View Printer Status** on the **Maintenance** tab.
- The information displayed on the Canon IJ Status Monitor may differ depending on the country or region where you are using your printer.

When Errors Occur

The Canon IJ Status Monitor is automatically displayed if an error occurs (e.g., if the printer runs out of paper or if the ink is low).

In such cases, take the appropriate action as described.

Related Topic

➡ Canon IJ Status Monitor Description

Instructions for Use (Printer Driver)

This printer driver is subject to the following restrictions. Keep the following points in mind when using the printer driver.

Restrictions on the Printer Driver

- With some applications, the **Copies** setting in the **Page Setup** tab of the printer driver may not be enabled.
  In this case, use the copies setting in the **Print** dialog box of the application software.
- If the selected **Language** in the **About** dialog box of the **Maintenance** tab does not match the operating system interface language, the printer driver setup window may not be displayed properly.
- Do not change the **Advanced** tab items of the printer properties. If you change any of the items, you will not be able to use the following functions correctly.
  Also, if **Print to file** is selected in the **Print** dialog box of the application software and with applications that prohibit EMF spooling, the following functions will not operate.
  - **Preview before printing** on the **Media/Quality** tab
  - **Prevention of Print Data Loss** in the **Print Options** dialog box on the **Page Setup** tab
  - **Automatic** when **2-sided Printing** is selected from **1-sided/2-sided/Booklet Printing** on the **Page Setup** tab
  - **Booklet Printing** in **1-sided/2-sided/Booklet Printing** on the **Page Setup** tab
  - **Print from Last Page**, **Collate**, **Specify Margin...**, and **Stamp/Background...** on the **Page Setup** tab
- Since the resolution in the preview display differs from the printing resolution, text and lines in the preview display may appear different from the actual print result.
- With some applications, the printing is divided into multiple print jobs.
  To cancel printing, delete all divided print jobs.
- If image data is not printed correctly, display the **Print Options** dialog box from the **Page Setup** tab and change the setting of **Disable ICM required from the application software**. This may solve the problem.
- If you are using a model that has a card slot, the card slot of the printer may become inaccessible. In such cases, restart the printer or turn it off and reconnect the USB cable.

Points to Note About Applications with Restrictions

- There are following restrictions in Microsoft Word (Microsoft Corporation).
  - When Microsoft Word has the same printing functions as the printer driver, use Word to specify them.
  - When a setting from **2 on 1** to **16 on 1** or **Zoom** is used for **Page Layout** on the **Page Setup** tab of the printer driver, the document may not print normally in certain versions of Word.
  - When **Page Size** in Word is set to "XXX Enlarge/Reduce," the document may not print normally in certain versions of Word.
    If this happens, follow the procedure below.
    1. Open Word's **Print** dialog box.
    2. Open the printer driver setup window, and on the **Page Setup** tab, set **Page Size** to the same paper size that you specified in Word.

3. Set **Booklet Printing** in **Page Layout** or **1-sided/2-sided/Booklet Printing** according to your requirements.
4. Click OK to close the window.
5. Without starting printing, close the **Print** dialog box.
6. Open Word's **Print** dialog box again.
7. Open the printer driver setup window and click **OK**.
8. Start printing.

- If bitmap printing is enabled in Adobe Illustrator (Adobe Incorporated), printing may take time or some data may not be printed. Print after unchecking the **Bitmap Printing** check box in the **Print** dialog box.

Maintenance Tab Description

The **Maintenance** tab allows you to change the printer settings or check its status.

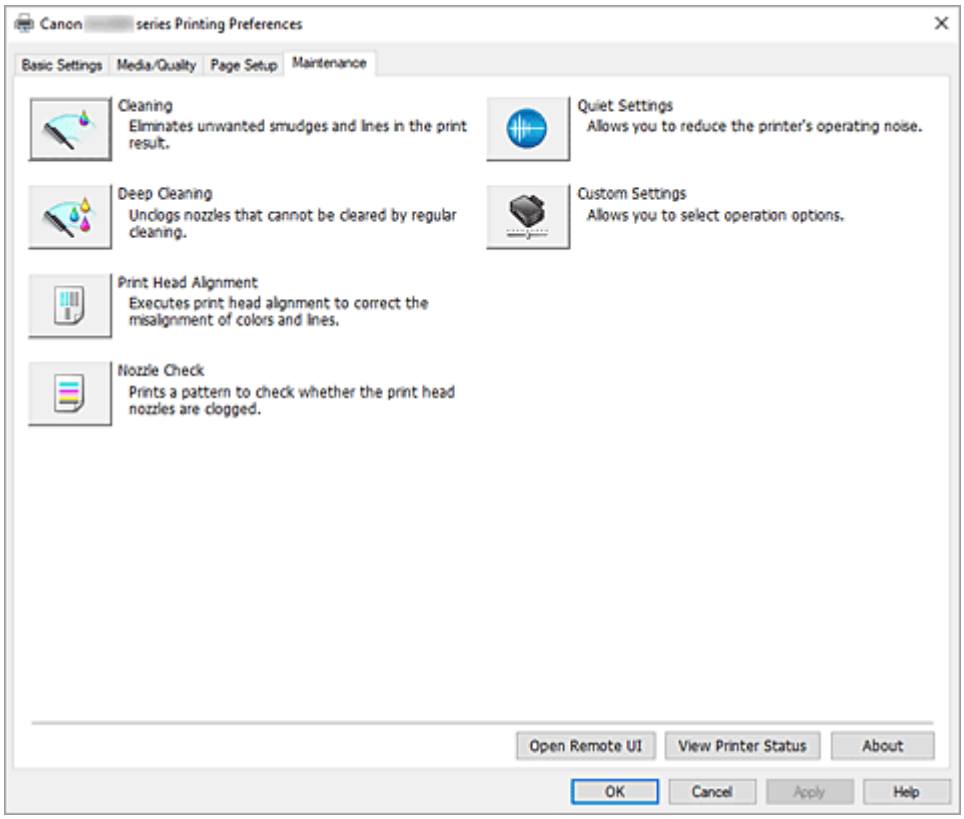

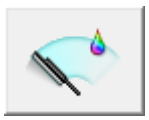

Cleaning

Performs print head Cleaning.

The print head Cleaning function allows you to clear up clogged print head nozzles.

Perform print head Cleaning if printing results are not satisfactory or if a specific color fails to print, even though there is enough ink.

Deep Cleaning

Performs Deep Cleaning.

Perform Deep Cleaning when two Cleaning attempts do not resolve the print head problem.

Note

- **Deep Cleaning** consumes a larger amount of ink than **Cleaning**.
  Cleaning the print heads frequently will rapidly deplete your printer's ink supply. Perform Cleaning only when necessary.

Ink Group

When you click **Cleaning** or **Deep Cleaning**, the **Ink Group** window is displayed.

Selects the ink group that you want to clean the print head for.

Click **Initial Check Items** to display the items that you need to check before you perform Cleaning or Deep Cleaning.

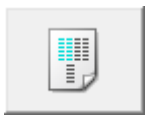

Print Head Alignment

Adjust the print head position.

Nozzle Check

Prints a Nozzle Check pattern.

Perform this function if printing becomes faint or a specific color fails to print. Print a Nozzle Check pattern, and check whether the print head is working properly.

If the print result for a specific color is faint, or if there are any unprinted sections, click **Cleaning** to clean the print head.

To display a list of items that you should check before printing the Nozzle Check pattern, click **Initial Check Items**.

Quiet Settings

Opens the **Quiet Settings** dialog box.

Quiet Settings dialog box allows you to specify a setting that reduces the operating noise of the printer. This mode comes in handy when the operating noise of the printer becomes a concern, such when printing at night. Perform this operation when you want to change the quiet mode setting.

Note

- If the printer is off or if communication between the printer and the computer is disabled, an error message may appear because the computer cannot collect the printer status.
  If this happens, click **OK** to display the most recent settings specified on your computer.

Custom Settings

Opens the **Custom Settings** dialog box.

Perform this function to change the settings of this printer.

Note

- If the printer is off or if communication between the printer and the computer is disabled, an error message may appear because the computer cannot collect the printer status.
  If this happens, click **OK** to display the most recent settings specified on your computer.

Open Remote UI

Menu for performing printer maintenance and changing settings.

View Printer Status

Starts the Canon IJ Status Monitor.

Perform this function when you want to check the printer status and how a print job is proceeding.

About

Opens the **About** dialog box.

The version of the printer driver, plus a copyright notice, can be checked.

In addition, the language to be used can be switched.

Initial Check Items (Cleaning / Deep Cleaning)

Before running **Cleaning** or **Deep Cleaning**, check that the printer power is on.
Check the following:

- Is there ink remaining?
- Does the maintenance cartridge have enough available space?

Initial Check Items (Nozzle Check)

Before performing **Nozzle Check**, check that the printer power is on.
Check the following:

- Is there ink remaining?

Quiet Settings dialog box

When you click **Quiet Settings**, the **Quiet Settings** dialog box is displayed.
Quiet Settings dialog box allows you to specify a setting that reduces the operating noise of the printer.
Select when you wish to reduce the operating noise of the printer at night, etc.
Using this function may lower the print speed.

Do not use quiet mode

Select this option when you wish to use the printer with volume of normal operating noise.

Always use quiet mode

Select this option when you wish to reduce the operating noise of the printer.

Use quiet mode during specified hours

Select this option when you wish to reduce the operating noise of the printer during a specified period of time.
Set the **Start time** and the **End time** of the quiet mode you wish to be activated. If both are set to the same time, the quiet mode will not function.

Important

- You can set the quiet mode from the operation panel of the printer, the **Maintenance** tab, or ScanGear (scanner driver).
  No matter how you use to set the quiet mode, the mode is applied when you perform operations from the operation panel of the printer or printing and scanning from the computer.
- Quiet Mode is not applied to operations (copy, direct print, etc.) performed directly from the printer even during times set for **Use quiet mode during specified hours**.

Custom Settings dialog box

When you click **Custom Settings**, the **Custom Settings** dialog box is displayed.
If necessary, switch between various modes of printer operation.

Rotate 90 degrees left when orientation is [Landscape]

On the **Page Setup** tab, you can change the rotation direction of the **Landscape** in the **Orientation**.
To rotate the print data 90 degrees to the right during printing, uncheck this check box.

Important

- Do not change this setting while the print job is displayed in the print wait list. Otherwise, characters may be omitted or the layout may become corrupt.

Note

- If **Envelope Com 10**, **Envelope DL**, **Yougata 4 4.13"x9.25"**, **Yougata 6 3.86"x7.48"**, **Envelope C5**, or **Envelope Monarch 3.88"x7.5" 98.4x190.5mm** is selected for **Page Size** on the **Page Setup** tab, the printer rotates the paper 90 degrees to the left to print, regardless of the **Rotate 90 degrees left when orientation is [Landscape]** setting.

Do not detect mismatched paper settings when printing from a computer

When you print documents from your computer, the paper settings in the printer driver and the paper information registered on the printer do not match, this setting disables the message display and allows you to continue printing.
To disable detection of paper setting mismatches, check this check box.

Align heads manually

Usually, the **Print Head Alignment** function in the **Maintenance** tab is set to automatic head alignment, but you can change it to manual head alignment.
If the printing results of automatic Print Head Alignment are not satisfactory, perform manual head alignment.
Check this check box to change to manual head alignment.

Ink Drying Wait Time

You can set the length of the printer rest time until printing of the next page begins. Moving the slider to the right increases the pause time, and moving the slider to the left decreases the time.
If the paper gets stained because the next page is ejected before the ink on the printed page dries, increase the ink drying wait time.

About dialog box

When you click **About**, the **About** dialog box is displayed.
This dialog box displays the version, copyright, and module list of the printer driver. You can select the language to be used and switch the language displayed in the setup window.

Modules

Lists the printer driver modules.

Language

Specifies the language you wish to use in the printer driver setup window.

Important

- If the font for displaying the language of your choice is not installed in your system, the characters will be garbled.

Allow Google Analytics to send information

To stop sending information, uncheck this check box.

The check box appears only if a user with administrator privileges is logged on. If information is not provided, the check box will not appear.

Related Topics

- Cleaning the Print Heads
- Adjusting Print Head Position Automatically
- Printing a Nozzle Check Pattern
- Reducing the Printer Noise
- Changing the Printer Operation Mode

Canon IJ Status Monitor Description

The Canon IJ Status Monitor displays the printer status and the printing progress. The printer status is shown by the icons and messages in the status monitor.

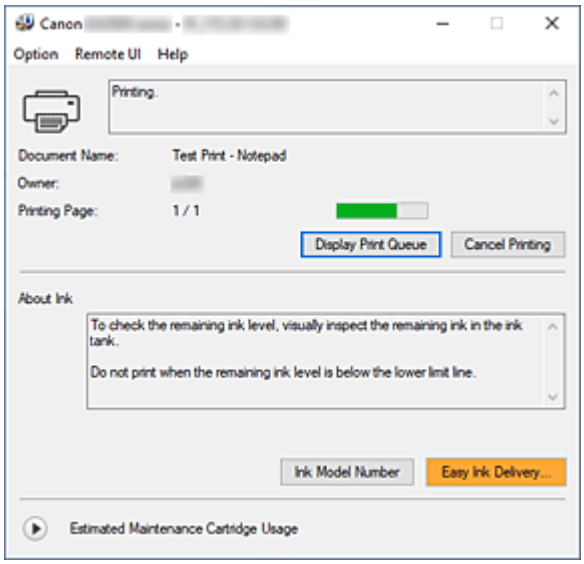

Features of the Canon IJ Status Monitor

The Canon IJ Status Monitor has the following functions:

Onscreen display of printer status

The status monitor displays the printer status in real-time.
You can check the progress of each document to be printed (print job).

Display of error content and correction procedure

The status monitor displays information on any errors that occur on the printer.
You can then immediately check what sort of action to perform.

Overview of the Canon IJ Status Monitor

The Canon IJ Status Monitor displays icons and messages related to printer status and ink.
During printing, you can check information about the document being printed and the print progress.
If an error occurs, the status monitor displays the error content and instructions on how to correct the error. Follow the message instructions.

Printer

Canon IJ Status Monitor shows an icon when a warning or error occurs to the printer.

: There is a warning.

: There has been an operator error.

: There is a notice about something other than a warning or an error.

: There has been an error which requires a service.

Document Name

Name of the document being printed.

Owner

Owner's name of the document being printed.

Printing Page

Page number of current page and the total page count.

Display Print Queue

The print queue, which controls the current document and documents waiting to be printed.

Cancel Printing

Cancels printing.

About Ink

Displays messages about ink.

Ink Model Number

You can look up the correct ink model number for your printer.

Estimated Maintenance Cartridge Usage

Displays icons to report that the available space in the maintenance cartridge is low or the cartridge is full.

Click (the disclosure triangle) to display a pictorial representation of the estimated usage amount in the maintenance cartridge.

Option Menu

If a printer message appears, select **Enable Status Monitor** to start the Canon IJ Status Monitor.

Select **Enable Status Monitor** to use the following commands:

Always Display Current Job

Displays the Canon IJ Status Monitor whenever a document is being printed.

Always Display on Top

Displays the Canon IJ Status Monitor in front of other windows.

Display Guide Message

Displays guide messages for complicated paper setting operations.

Envelope Printing

Displays a guide message when envelope printing starts.

To hide this guide message, select the **Do not show this message again** check box.

To display the guide message again, open the **Option** menu, select **Display Guide Message**, click **Envelope Printing**, and enable this setting.

How to load paper

Displays a guide message if the other guide is not displayed when the printer begins printing for media types other than plain paper.

To hide this guide message, select the **Do not show this message again** check box.

To display the guide message again, click How to load paper on the **Display Guide Message** in the **Option** menu and enable this setting.

Display Warning Automatically

When a Maintenance Cartridge Warning Occurs

When a maintenance cartridge remaining space warning occurs, the Canon IJ status monitor starts automatically and appears in front of all other windows.

Display Firmware Update Notifications

Displays firmware update notifications.
If there's a firmware update available, a dialog box is displayed when you start printing.
If you add a check mark to **Do not show this message again** in this dialog box, you can prevent it from displaying again.

Start when Windows is Started

Automatically starts the Canon IJ Status Monitor when Windows is started.

Remote UI menu

You are able to open the printer's Remote User Interface.
You are able to check the printer status and run maintenance functions on the printer when connected to and using it through a network.

Note

- When the printer is being used via USB connection **Remote UI** will not display.

Printer Information

Allows you check detailed information, such as the printer status, the print progress, and remaining ink levels.

Maintenance

Allows you to run printer maintenance and change printer settings.

Download Security Certificate

Displays the **For secure communication** window.
This window allows you to download the route certificate, register it to the browser, and disable warning displays.

Help Menu

Select this menu to display Help information for the Canon IJ Status Monitor including version and copyright information.

Related Topic

➡ Canon IJ Status Monitor

Updating the Driver

Drivers include a printer driver and MP Drivers. The MP Drivers include a printer driver, ScanGear (scanner driver), and fax driver.
By updating the Driver to the latest version of the Driver, unresolved problems may be solved.

Important

- Check the following if you want to install or delete drivers.
  - Log on as a user who has the administrator account.
  - Terminate all running applications.

- Installing the Driver
- Deleting the Unnecessary Driver

Installing the Driver

1. Turn on the printer

2. Start the installer

   Double-click the icon of the downloaded file.
   The installation program starts.

3. Install the driver

   Take the appropriate action as described on the screen.

4. Complete the installation

   Click **Exit**.

   Depending on the environment you are using, a message prompting you to restart the computer may be displayed. To complete the installation properly, restart the computer.

Important

- You can download the driver for free, but any Internet access charges incurred are your responsibility.

Deleting the Unnecessary Driver

The printer driver which you no longer use can be deleted.

1. Start the uninstaller

   Select **Control Panel** -> **Programs** -> **Programs and Features**.
   From the program list, select "Canon XXX Printer Driver/MP Drivers" (where "XXX" is your model name) and then click Uninstall.

   The confirmation window for uninstalling the model appears.

2. Perform the uninstaller

Click **Start**. When the confirmation message appears, click **Yes**.
When all the files have been deleted, click **Complete**.

The deletion of the Driver is complete.

Printing from Application Software (macOS AirPrint)

- Printing Basic
- Printing on Postcards
- Adding Printer
- How to Open Printer Settings Screen
- Displaying the Printing Status Screen
- Deleting the Undesired Print Job
- Removing Printer That Is No Longer Required from List of Printers

Printing

This printer is compatible with the macOS standard printing system (AirPrint).
You can start printing right away after connecting this printer to your Mac without installing any special software.

Checking Your Environment

First, check your environment.

- AirPrint Operation Environment
  Mac running the latest version of OS
- Requirement
  The Mac and the printer must be connected by one of the following methods:
  - Connected to the same network over a **LAN**
  - Connected directly without wireless router (Direct Connection)
  - Connected by USB

Print from a Mac

1. Check that printer is turned on

   Note

   - If **Auto power on** is enabled, printer automatically turns itself on when receiving a print job.

2. Load paper in printer

3. Select paper size and paper type from printer

   Register the set paper size and paper type on the printer operation panel.
   For instructions, see "Paper Settings."

4. Start printing from your application software

   The Print dialog opens.

5. Select printer

   Select your model from the **Printer** list in the Print dialog.

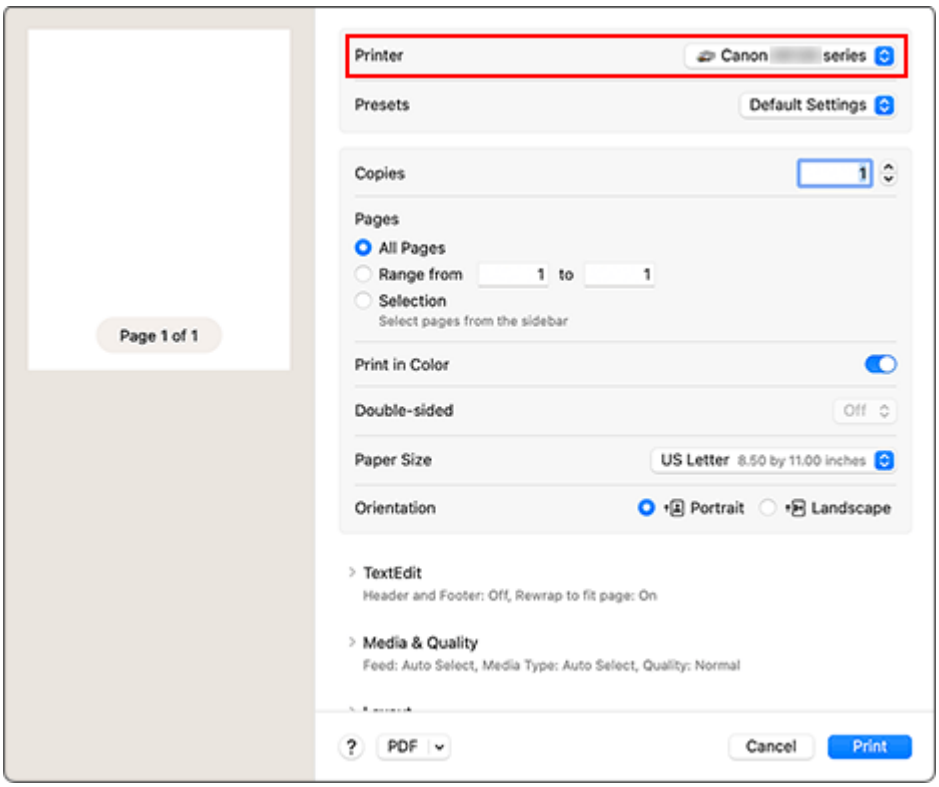

6. Check print settings

Set items such as **Paper Size** to the appropriate size, as well as **Media Type** from **Media & Quality**. Set **Double-sided** to **Off** if you are not printing on both sides of the paper.

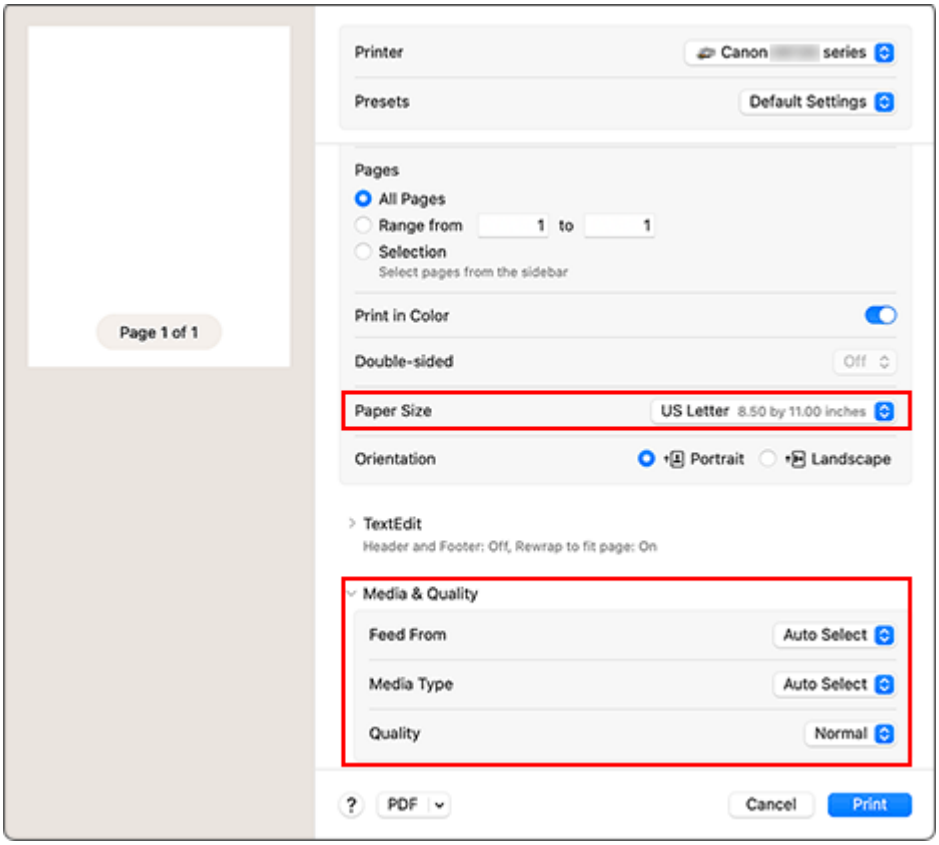

Important

- An error may occur if the paper size set in the print dialog is different from the paper size registered on the printer. Select the correct items on the print dialog and the printer that correspond to the paper being printed.
- If printing paper such as photo paper and postcards that cannot be printed on both sides, set **Double-sided** to **Off**.

Note

- Use the Print dialog to set general print settings such as the layout and the print sequence. For information about print settings, refer to macOS help.

7. Click **Print**

The printer prints according to the specified settings.

Note

- It can take the Wi-Fi a few minutes to get connected after the printer turns on. Print after checking that the printer is connected to the network.
- You cannot print if Bonjour settings of printer are disabled. Check **LAN** settings of printer and enable Bonjour settings.
- Refer to "Cannot Print Using AirPrint" for printing problems.
- The display of the settings screen may differ depending on the application software you are using.

Printing of Envelopes

For printing on the envelope from Mac, refer to the following.

Print result image	Orientation of print data	Orientation of loading envelope
	The print data is rotated by 180 degrees against the print result image.	Load the envelope in vertically with the address side facing up so that the folded flap of the envelope will be faced down on the right side.

Printing on Postcards

This section describes the procedure for printing on postcards.

1. Load postcards in printer

2. Select paper size and paper type from the printer

   Register **Hagaki** for paper size from the printer operation panel.
   Also, register **Ink Jet Hagaki**, **Hagaki K**, or **Hagaki** for paper type, according to your purpose. When you print on the address side, register **Hagaki**.

3. Select **Paper Size** and **Media Type** from the print dialog

   Select **Postcard** for **Paper Size** from the print dialog.
   Select the Hagaki you want to use for **Media Type** in **Media & Quality** from the print dialog.

   Important

   - This printer cannot print on postcards that have photos or stickers attached.

4. Set **Double-sided** to **Off**

   Important

   - Two-sided printing is not possible for postcards, so set **Double-sided** to **Off**. If you print with **Double-sided** set to **On**, the printing result may not be as you intended.
   - You will get cleaner printing if you print the message side first and then print the address side.

5. Click **Print**

   The printer prints according to the specified settings.

Adding Printer

This section describes the procedure for adding a printer to your Mac.

To re-add a printer that was deleted, open **System Settings** -> **Printers & Scanners**, click **Add Printer, Scanner or Fax...**, and then perform the procedure described below.

If your printer is connected via USB, and you connect the USB cable to a Mac, the printer is automatically added. The below procedure is not necessary in this case.

1. Check whether **Default** is selected in the displayed dialog

   Note

   - It may take a little time for your printer to appear.

2. Select the printer

   Select the printer listed as **Bonjour Multifunction**.

   Note

   - Check the following if printer does not appear.
     - Printer is on
     - Firewall function of the security software is off
     - In case of Wi-Fi connection: Printer is either connected to the wireless router or directly connected to the PC (Direct Connection)
     - In case of wired **LAN** connection: Printer is connected to the network device via **LAN** cable

3. Select your printer or **Secure AirPrint** from **Use**

4. Click **Add**

   The printer is added to your Mac.

How to Open Printer Settings Screen

The settings screen of the printer can be displayed from your application software.

Opening the Page Setup Dialog

Use this procedure to set the page (paper) settings before printing.

1. Select **Page Setup...** from the **File** menu of the application software

   The Page Setup dialog opens.

Opening the Print Dialog

Use this procedure to set the print settings before printing.

1. Select **Print...** from the **File** menu of the application software

   The Print dialog opens.

Displaying the Printing Status Screen

Check the print progress according to the following procedure:

1. Launch the printing status screen

- If the print data has been sent to the printer
  The printing status screen opens automatically. To display the printing status screen, click the printer icon displayed on the Dock.
- If the print data has not been sent to the printer
  Open **System Settings**, and select **Printers & Scanners**.
  To display the printing status screen, select your printer model from the printer list, and then click **Printer Queue...**.

2. Check the printing status

You can check the name of the file being printed or ready for being printed.

Deletes the specified print job.

Stops printing the specified document.

Resumes printing the specified document.

Stops printing all documents.

Displayed only when printing of all documents is being stopped, and resumes printing all documents.

Important

- If an error occurs, an error message will appear on the printing progress confirmation screen.
- The content of the error message may differ depending on the OS version.
- The printer part names in the error message may differ from what is listed in this manual.
- If the content of the error message is difficult to understand, check the error message displayed on the printer operation panel.

Deleting the Undesired Print Job

If the printer does not start printing, canceled or failed print job data may be remaining.
Delete unnecessary print jobs from the print status check screen.

1. Open **System Settings**, and select **Printers & Scanners**

2. Select your model, and then click **Printer Queue...**

   The print status check screen appears.

3. Select the unnecessary print job and click (Delete)

   The selected print jobs will be deleted.

Removing Printer That Is No Longer Required from List of Printers

The printer that is no longer in use can be removed from the list of printers.
Before removing the printer, remove the cable connecting the printer and PC.

You cannot remove the printer if you are not logged on as the administrator. For information about an administrative user, see **Users & Groups** from **System Settings**.

1. Open **System Settings**, and select **Printers & Scanners**

2. Delete printer from list of printers

   Select the printer you wish to remove from the list of printers and click **Remove Printer...**.

   Click **Delete Printer** when the confirmation message appears.

Printing Using Canon Application Software

- **Easy-PhotoPrint Editor Guide**

Printing from Smartphone/Tablet

- **Printing from iPhone/iPad/iPod touch (iOS)**
- **Printing from Smartphone/Tablet (Android)**

Printing Hagaki and Envelopes

For Windows

- Printing on Postcards
- Setting Up Envelope Printing

For macOS

- Printing on Postcards

Printing on Postcards

1. Load postcard on the printer

2. Open the printer driver setup window

3. Select commonly used settings

   Display the **Basic Settings** tab, and for **Profiles**, select **Standard**.

4. Select the paper size

   For **Printer Paper Size**, select **Hagaki 100x148mm** or **Hagaki 2 200x148mm**.

   Important

   - Return postcards can be used only when you print them from the computer.
   - When printing a return postcard, always set the paper size to **Hagaki 2 200x148mm** from your application software or the printer driver.
   - Do not fold the return postcard. If a crease is formed, the printer will not be able to feed the postcard properly, and this condition will cause line shifts or a paper jam.

5. Select the media type

   Select the Hagaki you want to use from **Hagaki** in **Media Type**.

   Important

   - This printer cannot print on postcards that have photos or stickers attached.
   - You will get cleaner printing if you print the message side first and then print the address side.
   - The paper settings on the printer driver are different, depending on whether you are printing on the address side or the message side.
     For details about the paper information to be registered to the printer driver and on the printer, see the following:
     - Paper Settings on the Printer Driver and the Printer (Media Type)
     - Paper Settings on the Printer Driver and the Printer (Paper Size)

6. Set the print orientation

   To print the address horizontally, set **Orientation** to **Landscape**.

7. Select the print quality

   For **Quality**, select the quality according to your purpose.

8. Click **OK**

   When you perform printing, the data will be printed onto the postcard.

Printing on Postcards

This section describes the procedure for printing on postcards.

1. Load postcards in printer

2. Select paper size and paper type from the printer

   Register **Hagaki** for paper size from the printer operation panel.
   Also, register **Ink Jet Hagaki**, **Hagaki K**, or **Hagaki** for paper type, according to your purpose. When you print on the address side, register **Hagaki**.

3. Select **Paper Size** and **Media Type** from the print dialog

   Select **Postcard** for **Paper Size** from the print dialog.
   Select the Hagaki you want to use for **Media Type** in **Media & Quality** from the print dialog.

   Important

   - This printer cannot print on postcards that have photos or stickers attached.

4. Set **Double-sided** to **Off**

   Important

   - Two-sided printing is not possible for postcards, so set **Double-sided** to **Off**. If you print with **Double-sided** set to **On**, the printing result may not be as you intended.
   - You will get cleaner printing if you print the message side first and then print the address side.

5. Click **Print**

   The printer prints according to the specified settings.

Setting Up Envelope Printing

1. Load envelope on the printer

2. Open the printer driver setup window

3. Select the media type

   Select **Envelope** from **Profiles** on the **Basic Settings** tab.

4. Select the paper size

   When the **Envelope Size Setting** dialog box is displayed, select the envelope size you want to use, and then click **OK**.

5. Set the orientation

   To print the addressee horizontally, select **Landscape** for **Orientation**.

   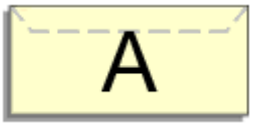

   Note

   - If **Envelope Com 10**, **Envelope DL**, **Yougata 4 4.13"x9.25"**, **Yougata 6 3.86"x7.48"**, **Envelope C5**, or **Envelope Monarch 3.88"x7.5" 98.4x190.5mm** is selected for **Printer Paper Size**, the printer rotates the paper 90 degrees to the left to print, regardless of the **Rotate 90 degrees left when orientation is [Landscape]** setting for **Custom Settings** in the **Maintenance** tab.

6. Select the print quality

   For **Quality**, select the quality according to your purpose.

7. Click **OK**

   When you perform print, the information is printed on the envelope.

Important

- When you perform envelope printing, guide messages are displayed.
  To hide the guide messages, check the **Do not show this message again** check box.
  To show the guide again, click the **View Printer Status** button on the **Maintenance** tab, and start the Canon IJ Status Monitor.
  Then click **Envelope Printing** from **Display Guide Message** of the **Option** menu to enable the setting.

Other Various Printing Features

- **Printing Pattern Paper or Templates**

Paper Settings

By registering the paper size and the media type, the message is displayed before printing starts when the paper size or the media type of the loaded paper differs from the paper settings.

After loading paper

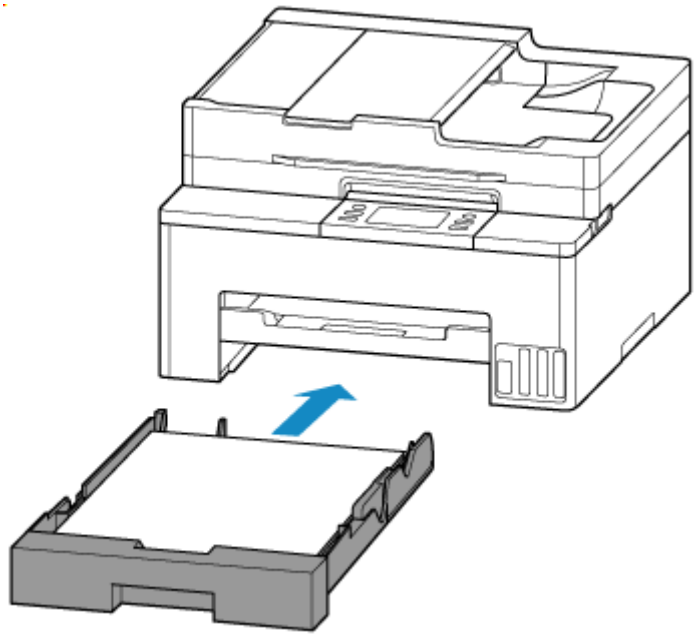

The screen to register the cassette paper information is displayed.

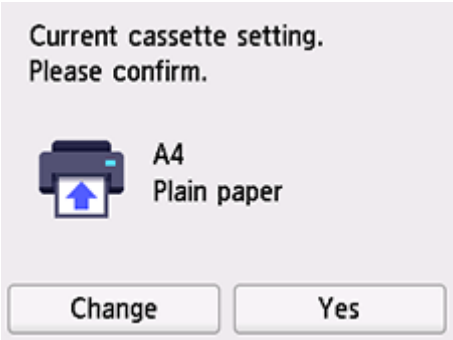

If the page size on the touch screen matches the size of the paper loaded in the cassette, select **Yes**.

If not, select **Change** to change the setting in accordance with the size of the loaded paper.

Note

- See Detect paper width when you want to hide the screen for confirming the setting of paper.
- For more on the proper combination of paper settings you can specify by the printer driver (Windows) or on the touch screen:
  - Paper Settings on the Printer Driver and the Printer (Media Type)
  - Paper Settings on the Printer Driver and the Printer (Paper Size)

When the paper settings for printing/copying are different from the paper information registered to the printer

Ex:

- Paper settings for printing/copying: A5
- Paper information registered to the printer: A4

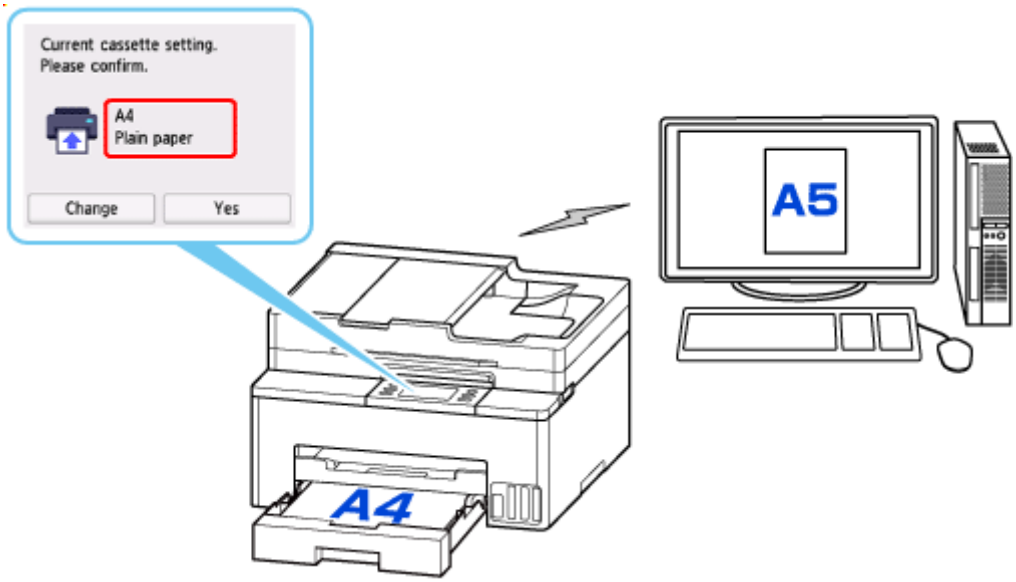

When you start printing/copying, a message is displayed.

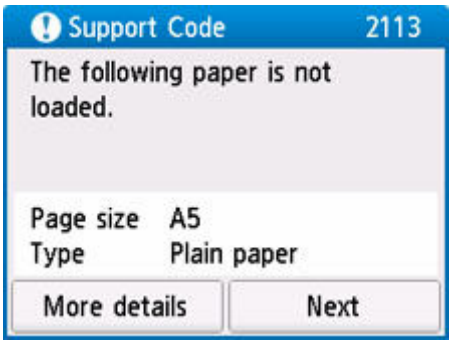

Check the message and select **Next**, and then choose one of the following.

Print with the loaded paper.

Select if you want to print/copy on the paper loaded without changing the paper settings.

For example, when the paper setting for printing/copying is A5 and the paper information registered to the printer is A4, the printer starts printing/copying on the paper loaded in the cassette without changing the paper size setting for printing/copying.

Replace the paper and print

Select if you want to print after replacing the paper of the cassette.

For example, when the paper size setting for printing/copying is A5 and the paper information registered to the printer is A4, you load A5 sized paper in the cassette before you start printing/copying.

The paper information registration screen is displayed after replacing the paper. Register the paper information according to the paper that you loaded.

Cancel print

Cancels printing.

Select when you change the paper settings specified for printing/copying. Change the paper settings and try printing/copying again.

Copying

- Making Copies
- Reducing/Enlarging Copies
- Two-Sided Copying
- Collated Copying
- Special Copy Menu

Making Copies

This section describes the basic procedure to perform standard copying.

1. Check that printer is turned on.

2. Load paper.

3. Select **Copy** on the HOME screen.

   ➡ Using Touch Screen

   The Copy standby screen is displayed.

4. Load original on platen or in ADF (Auto Document Feeder).

5. Specify settings as necessary.

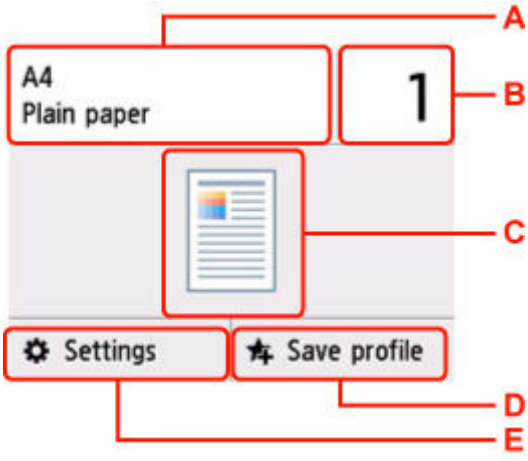

A: Specify the page size and the media type.

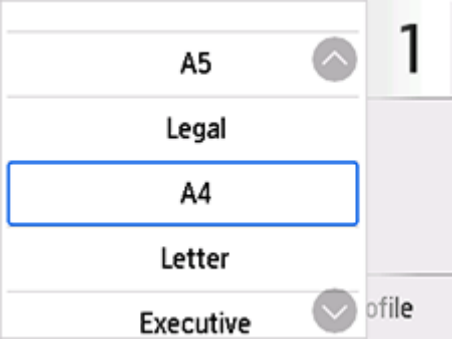

B: Specify the number of copies.

C: The scanning method and copy layout are displayed.

Switch the scanning method from the ADF and layout (single-sided/two-sided).

D: Select to register the current scan settings as a custom setting.

➡ Registering Favorite Settings (My Presets)

E: Display the print setting items.

For more on the setting items:

➡ Setting Items for Copying

6. Press the **Black** button or the **Color** button.

The printer starts copying.

Remove the original on the platen or from the document output slot after copying is complete.

Important

- Do not open the document cover or remove the original from the platen until scanning is completed.
- If you load the original in the ADF, do not move the original until copying is complete.

Adding Copying Job (Reserve copy)

If you load the original on the platen, you can add the copying job while printing (Reserve copy).

The message is displayed when you can add the copying job.

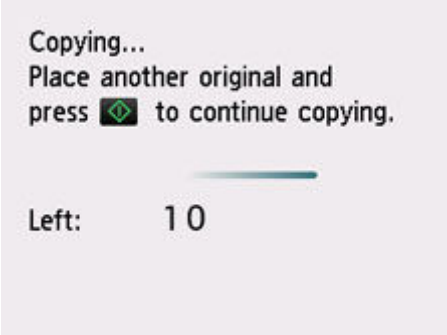

Load the original on the platen and select the same button (**Black** button or **Color** button) as the one which you previously pressed.

Note

- When **Print qlty** (print quality) is set **High**, you cannot add the copying job.

- If you press **Stop** button while reserve copying is in progress, the screen to select the method to cancel copying is displayed. If you select **Cancel all reservations**, you can cancel copying all scanned data. If you select **Cancel the last reservation**, you can cancel the last copying job.
- If you set a document of too many pages to add the copying job, **Cannot add more copy jobs. Please wait a while and try again.** may appear on the touch screen. Select **OK** and wait a while, and then try copying again.
- If **Failed to reserve the copy job. Start over from the beginning.** appears on the touch screen when scanning, select **OK** and press **Stop** button to cancel copying. After that, copy the documents that have not been finished copying.

Setting Items for Copying

You can change the copy settings such as magnification and intensity.

Print Settings Screen

The print settings screen is displayed by selecting **Settings** in the Copy standby screen.

Preview

When **Preview** is displayed on the print settings screen, selecting **Preview** allows you to preview an image of the printout on the preview screen.

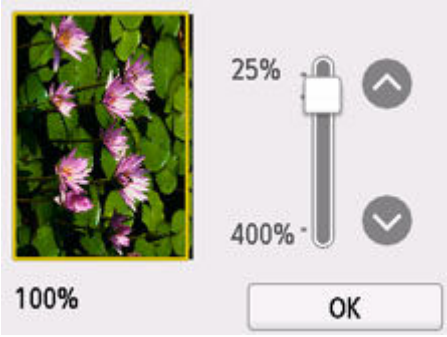

For details, see below.

➡ Displaying Preview Screen

Setting Items

Flick to display setting items and select the setting item to display the settings. Select to specify the setting.

Following setting items can be changed.

- **Intensity**

  Specify the intensity.

A: Select to activate/deactivate automatic intensity adjustment.

When **ON** is selected, the intensity is adjusted automatically according to the originals loaded on the platen.

B: Drag to specify the intensity.

- **Magnif.**

  Specify the reduction/enlargement method.

  ➡ Reducing/Enlarging Copies

- **Paper src**

  Select a paper source.

- **Page size**

  Select the page size.

- **Type**

  Select the media type.

- **Print qlty**

  Specify the print quality.

  Important

  - Select **High** for **Print qlty** to copy in grayscale. Grayscale renders tones in a range of grays instead of black or white.

- **Layout**

  Select the layout.

  ➡ Copying Two Pages onto Single Page
  ➡ Copying Four Pages onto Single Page

- **ADF duplex scan**

  Select whether to perform duplex scanning from the ADF (Auto Document Feeder).

  ➡ Two-Sided Copying

- **2-sidedPrintSetting**

  Select whether to perform two-sided copying.

  ➡ Two-Sided Copying

- **Collate**

Select whether to obtain sorted printouts when making multiple copies of a multi-paged original.

➡ Collated Copying

- **Frame erase copy**

  When copying thick originals such as books, you can make a copy without black margins around the image and gutter shadows.

  ➡ Copying Thick Originals Such as Books

- **ID card copy**

  You can copy both sides of a card sized original such as an ID card onto a single sheet of paper.

  ➡ Copying ID Card to Fit onto Single Page

Scanning

- Scanning and Saving to a Computer
- Attaching Scanned Images to E-MAIL to Send
- Saving Scanned Images to Cloud Storage Folders

Scanning and Saving to a Computer

- Scanning in Windows
- Scanning in macOS
- Scanning with Chromebook
- Using Operation Panel to Scan

Scanning in Windows

- **Scanning According to Item Type or Purpose (Scan Utility)**
  - Scan Utility Features
  - Scanning Easily (Auto Scan)
  - Scanning Documents and Photos
  - Creating/Editing PDF Files
    - Setting Passwords for PDF Files
    - Editing Password-Protected PDF Files
- **Scanning Using Application Software (ScanGear)**
- **Scanning Tips**
  - Positioning Originals (Scanning from Computer)
  - Network Scan Settings
    - Network Scanner Selector EX2 Menu and Setting Screen

Important

- Available functions and settings vary depending on your scanner or printer.

Scanning According to Item Type or Purpose (Scan Utility)

- **Scan Utility Features**
- **Scanning Easily (Auto Scan)**
- **Scanning Documents and Photos**
- **Creating/Editing PDF Files**
  - Setting Passwords for PDF Files
  - Editing Password-Protected PDF Files

Important

- Available functions and settings vary depending on your scanner or printer.

Scan Utility Features

Use Scan Utility to scan and save documents, photos, or other items at one time by simply clicking the corresponding icon.

Important

- Available functions, the displayed items, and available settings vary depending on your model.

Multiple Scanning Modes

Auto allows for one click scanning with default settings for various items. **Document** will sharpen text in a document or magazine for better readability, and **Photo** is best suited for scanning photos.

Note

- For details on the Scan Utility main screen, see Scan Utility Main Screen.

Save Scanned Images Automatically

Scanned images are automatically saved to a preset folder. The folder can be changed as needed.

Note

- The default save folders are as follows.
  - **Windows 11/Windows 10/Windows 8.1:**

    Documents folder
  - **Windows 7:**

    My Documents folder
- To change folder, see Settings Dialog Box.

Application Integration

Scanned images can be sent to other applications. For example, display scanned images in your favorite graphics application, attach them to e-mails, or extract text from images.

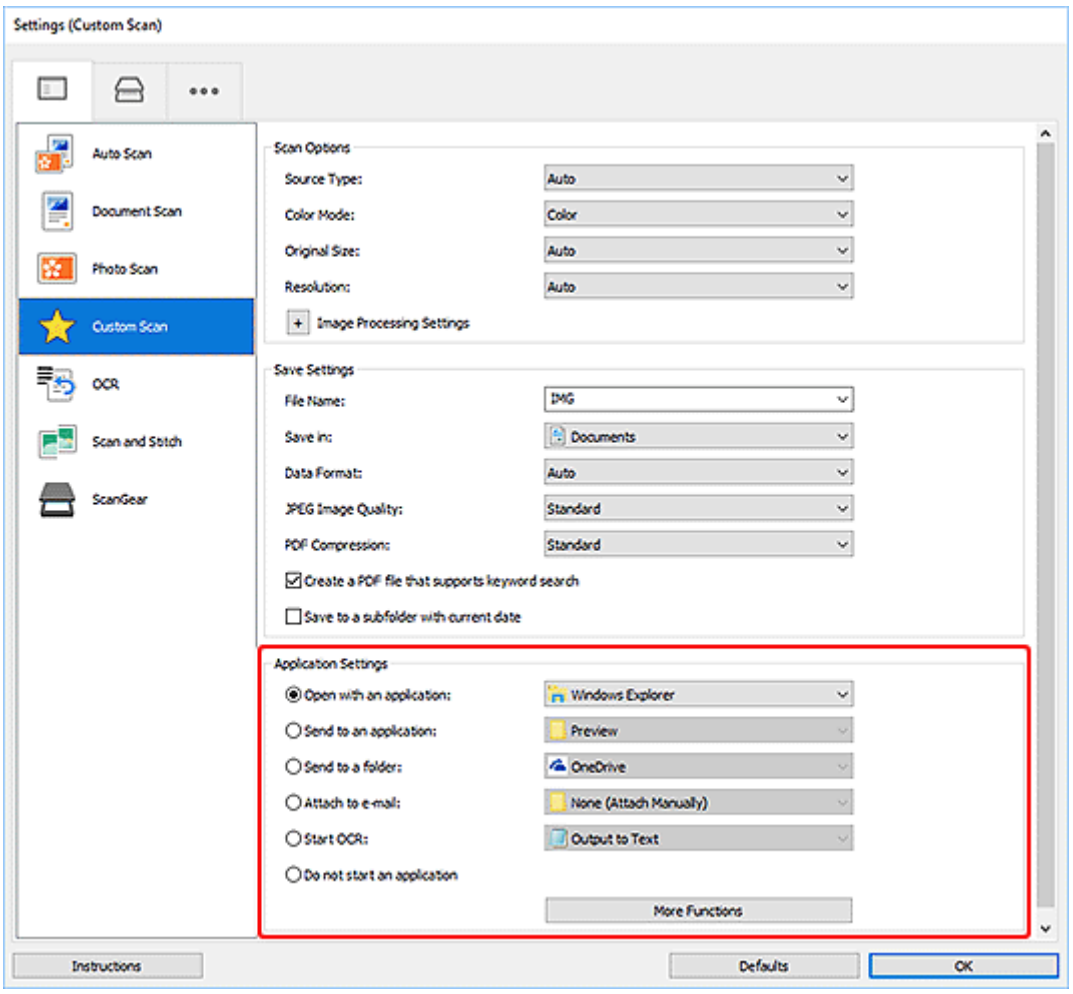

Note

- To set the applications to integrate with, see Settings Dialog Box.

Scanning Easily (Auto Scan)

Auto Scan allows for automatic detection of the type of the item placed on the platen or ADF (Auto Document Feeder).

Important

- This function is not supported depending on your model.
- The following types of items may not be scanned correctly. In that case, adjust the cropping frames (scan areas) in whole image view of ScanGear (scanner driver), and then scan again.
  - Photos with a whitish background
  - Items printed on white paper, hand-written text, business cards, and other unclear items
  - Thin items
  - Thick items
- When scanning two or more documents from the ADF, place documents of the same size.

1. Make sure scanner or printer is turned on.

2. Place items on platen or ADF.

   ➡ Positioning Originals (Scanning from Computer)

3. Start Scan Utility.

4. Click **Auto** in the Scan Utility main screen.

   Scanning starts.

Note

- To cancel the scan, click **Cancel**.
- Use the Settings (Scanning from a Computer) dialog box displayed by clicking **Settings...** to set where to save the scanned images and to make advanced scan settings.
- To scan a specific item type, see the following pages.

  ➡ Scanning Documents and Photos
  ➡ Scanning with Favorite Settings
  ➡ Scanning Multiple Documents at One Time from the ADF (Auto Document Feeder)

Scanning Documents and Photos

Scan items placed on the platen with settings suitable for documents or photos.

Save documents in formats such as PDF and JPEG, and photos in formats such as JPEG and TIFF.

1. Place the item on the platen.

   ➡ Positioning Originals (Scanning from Computer)

2. Start Scan Utility.

3. To specify the paper size, resolution, PDF settings, etc., click **Settings...**, and then set each item in the Settings (Scanning from a Computer) dialog box.

   Note

   - Once settings are made in the Settings dialog box, the same settings can be used for scanning from the next time.
   - In the Settings dialog box, specify image processing settings such as slant correction and outline emphasis, set the destination of the scanned images, and more, as needed.

   When setting is completed, click **OK**.

4. Click **Document** or **Photo** in the Scan Utility main screen.

   Scanning starts.

Note

- To cancel the scan, click **Cancel**.

Creating/Editing PDF Files

You can create PDF files by scanning items placed on the platen or ADF (Auto Document Feeder). Add, delete, rearrange pages or make other edits in the created PDF files.

Important

- You can create or edit up to 100 pages of a PDF file at one time.
- Only PDF files created or edited in Scan Utility or IJ PDF Editor are supported. PDF files created or edited in other applications are not supported.

Note

- You can also create PDF files from images saved on a computer.
- Selectable file formats are PDF, JPEG, TIFF, and PNG.
- Images whose number of pixels in the vertical or horizontal direction is 10501 or more cannot be used.
- When you select a password-protected PDF file, you must enter the password.

  ➡ Editing Password-Protected PDF Files

1. Place items on platen or ADF.

2. Start Scan Utility.

3. Click **PDF Editor** in the Scan Utility main screen.

   IJ PDF Editor starts.

4. To specify the paper size, resolution, and other settings, click **Settings...** from the **File** menu, and then set each item in the Settings (Scanning from a Computer) dialog box.

   ### Note

   - Once settings are made in the Settings dialog box, the same settings can be used for scanning from the next time.
   - In the Settings dialog box, specify image processing settings such as slant correction and outline emphasis.

   When setting is completed, click **OK**.

5. Click (Scan) on Toolbar.

   Scanning starts.

   ### Note

   - To open a file saved on the computer, click **Open...** from the **File** menu, and then select the file you want to edit.
   - You can switch the view with the Toolbar buttons. For details, see PDF Edit Screen.

6. Add pages as needed.

When scanning and adding more items:

Place items, and then click (Scan) on the Toolbar.

When adding existing images or PDF files:

Click (Add Page) on the Toolbar. After the **Open** dialog box appears, select the image(s) or PDF file(s) you want to add, and then click **Open**.

Note

- You can also add images or PDF files from **Add Page from Saved Data...** in the **File** menu.

7. Edit pages as needed.

When changing page order:

Click the page you want to move, and then click (Page Up) or (Page Down) on the Toolbar to change the page order. You can also change the page order by dragging and dropping a page to the target location.

When deleting pages:

Click the page you want to delete, and then click (Delete Page) on the Toolbar.

Note

- These buttons appear when two or more pages have been created.

8. Select **Save As...** in **File** menu.

The **Save** dialog box appears.

9. Specify save settings.

Important

- The following items cannot be set for images whose resolution is outside the range of 75 dpi to 600 dpi or whose number of pixels in the vertical or horizontal direction is between 10201 pixels and 10500 pixels.
  - **PDF Compression**
  - **Create a PDF file that supports keyword search**
  - **Correct slanted text originals**
  - **Detect the orientation of text original and rotate image**

File Name

Enter a file name for the PDF file to be saved. When two or more pages have been created and you are saving each page separately, a sequential number is appended to the file names.

Save in

Set the folder in which to save PDF files. To change the folder, click **Browse...**, and then specify the destination folder.

Save to a subfolder with current date

Select this checkbox to create a current date folder in the folder specified in **Save in** and save created or edited PDF files in it. The folder will be created with a name such as "20XX_01_01" (Year_Month_Date).

If this checkbox is not selected, files are saved directly in the folder specified in **Save in**.

File Type

Select the file format for saving PDF files.

PDF

Save each page as a separate PDF file.

PDF (Multiple Pages)

Save multiple pages in one PDF file.

Note

- **PDF (Multiple Pages)** appears when two or more pages have been created.

PDF Compression

Select the compression type for saving.

Standard

It is recommended that you normally select this setting.

High

Compresses the file size when saving. This will reduce the load on your network and server.

Important

- If you save PDF files with high compression repeatedly, images may degrade.

Create a PDF file that supports keyword search

Select this checkbox to convert text in images into text data and create PDF files that support keyword search.

Correct slanted text originals

Select this checkbox to detect the document orientation based on the text in images and correct the angle (within the range of -0.1 to -10 degrees or +0.1 to +10 degrees) for creating PDF files.

Important

- The following types of image may not be corrected properly since the text cannot be detected correctly.
  - Images in which the text lines are inclined more than 10 degrees or the angles vary by line
  - Images containing both vertical and horizontal text
  - Images with extremely large or small fonts
  - Images with small amount of text
  - Images containing figures/images
  - Hand-written images

Detect the orientation of text original and rotate image

Select this checkbox to detect the page orientation based on the text in images and automatically rotate the images to the correct orientation for creating PDF files.

Important

- This function is available only for images (text documents) containing languages that can be selected from **Document Language** in the **Settings (General Settings)** dialog box of Scan Utility. This function is not available depending on the language in the image.
- The page orientation of the following types of image may not be detected since the text cannot be detected correctly.
  - Images with small amount of text
  - Images containing text whose font size is outside the range of 8 points to 48 points
  - Images containing special fonts, effects, italics, or hand-written text
  - Images with patterned backgrounds

Set up password security

Select this checkbox to display the **Password Security Settings** dialog box for setting a password for opening the created PDF file or a password for printing/editing it.

Important

- When a password-protected PDF file is edited, the passwords will be deleted. Reset the passwords.

  ➡ Setting Passwords for PDF Files

10. Click **Save**.

The PDF file is saved.

Note

- When a password-protected PDF file is edited, the passwords will be deleted. Reset the passwords in the **Save** dialog box.

  ➡ Setting Passwords for PDF Files

- To overwrite a saved file, click (Save) on the Toolbar.

Scanning Using Application Software (ScanGear)

- What Is ScanGear (Scanner Driver)?
- Starting ScanGear (Scanner Driver)
- Scanning in Basic Mode
- ScanGear (Scanner Driver) Screens
- General Notes (Scanner Driver)

Important

- Available functions and settings vary depending on your scanner or printer.

What Is ScanGear (Scanner Driver)?

ScanGear (scanner driver) is software required for scanning documents. Use the software to specify the output size, image corrections, and other settings.

ScanGear can be started from Scan Utility or applications that are compatible with the standard TWAIN interface. (ScanGear is a TWAIN-compatible driver.)

Features

Specify the document type, output size, and other settings when scanning documents and preview scan results. Make various correction settings or finely adjust the brightness, contrast, and other parameters to scan in a specific color tone.

Screens

There are two modes: Basic Mode and Advanced Mode.

Switch modes with the tabs on the upper right of the screen.

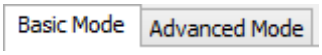

Note

- ScanGear starts in the last used mode.
- Settings are not retained when you switch modes.

Basic Mode

Use the **Basic Mode** tab to scan easily by following three simple on-screen steps (1, 2, and 3).

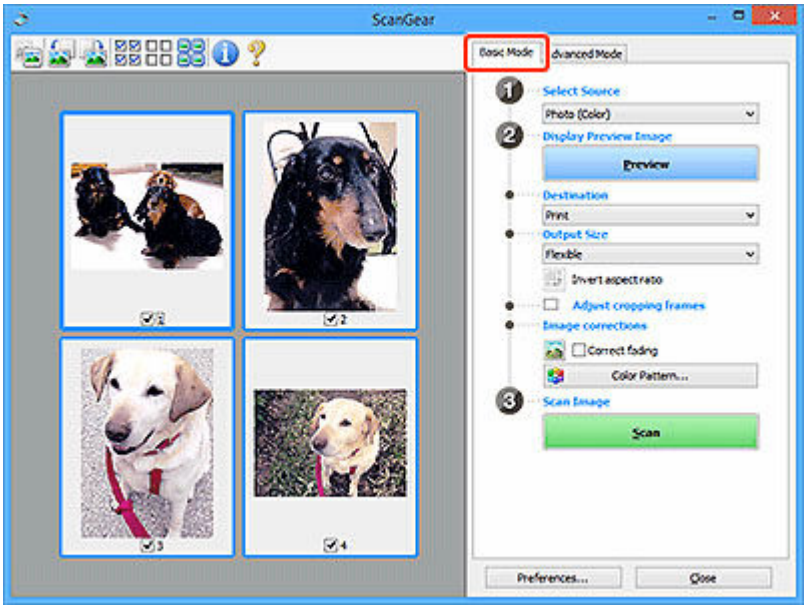

Advanced Mode

Use the **Advanced Mode** tab to scan by specifying the color mode, output resolution, image brightness, color tone, and other settings.

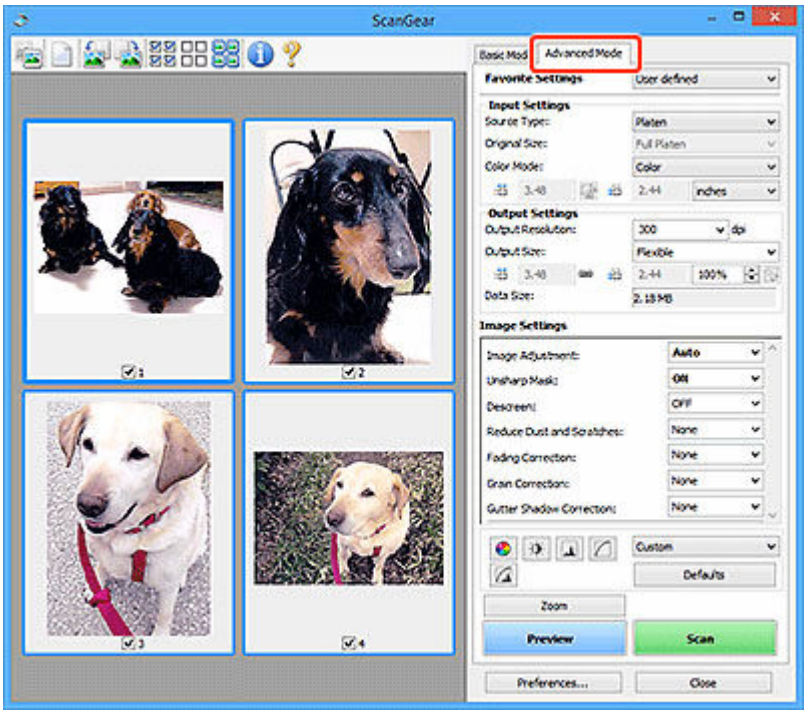

Starting ScanGear (Scanner Driver)

Use ScanGear (scanner driver) to make image corrections and color adjustments when scanning. Start ScanGear from Scan Utility or other applications.

Note

- If you have more than one scanner or have a network compatible model and changed the connection from USB connection to network connection, set up the network environment.

Starting from Scan Utility

1. Start Scan Utility.

   For how to start it, see Starting Scan Utility.

2. In Scan Utility main screen, click ScanGear.

   The ScanGear screen appears.

Starting from Application

The procedure varies depending on the application. For details, see the application's manual.

1. Start application.

2. On application's menu, select machine.

   Note

   - A machine connected over a network, will have "Network" displayed after the product name.

3. Scan document.

   The ScanGear screen appears.

Scanning in Basic Mode

Use the **Basic Mode** tab to scan easily by following these simple on-screen steps.

To scan multiple documents at one time from the Platen, see Scanning Multiple Documents at One Time with ScanGear (Scanner Driver).

When scanning from the ADF (Auto Document Feeder), preview is not available.

Important

- The following types of documents may not be scanned correctly. In that case, click (Thumbnail) on the Toolbar to switch to whole image view and scan.
  - Photos with a whitish background
  - Documents printed on white paper, hand-written text, business cards, and other unclear documents
  - Thin documents
  - Thick documents
- The following types of documents cannot be scanned correctly.
  - Documents smaller than 1.2 inches (3 cm) square
  - Photos that have been cut to irregular shapes

Note

- Both sides of a two sided document can be scanned simultaneously on models with ADF duplex scanning support.

1. Place document on machine's Platen or ADF, and then start ScanGear (scanner driver).

   ➡ Positioning Originals (Scanning from Computer)
   ➡ Starting ScanGear (Scanner Driver)

2. Set **Select Source** to match your document.

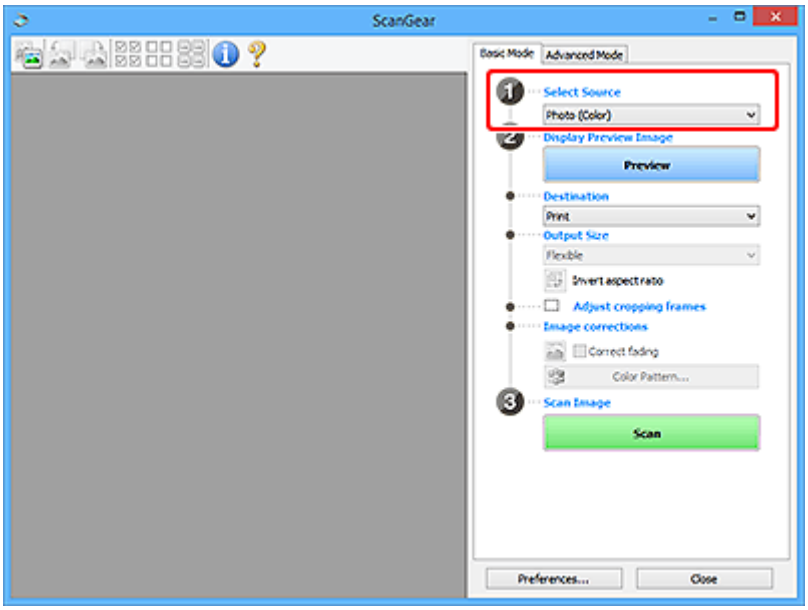

Important

- Some applications do not support continuous scanning from the ADF. For details, see the application's manual.

Note

- To scan magazines containing many color photos, select **Magazine (Color)**.

3. Click **Preview**.

Preview image appears in the Preview area.

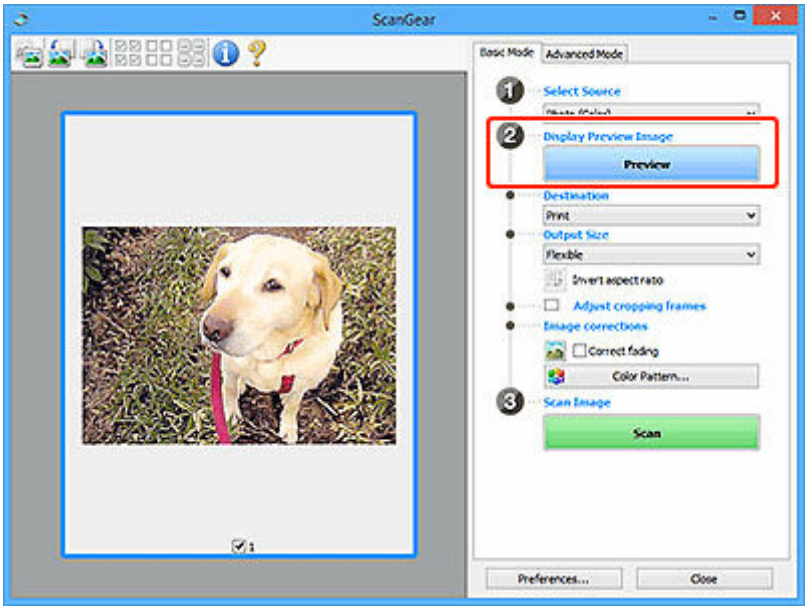

Important

- **Preview** is not available when scanning from the ADF.

Note

- Colors are adjusted based on the document type selected in **Select Source**.

4. Set **Destination**.

Note

- Skip ahead to Step 7 if an ADF option is selected in **Select Source**.

5. Set **Output Size**.

Output size options vary with the selected **Destination**.

6. Adjust cropping frames (scan areas) as needed.

Adjust the size and position of the cropping frames on the preview image.

➡ Adjusting Cropping Frames (ScanGear)

7. Set **Image corrections** as needed.

8. Click **Scan**.

   Scanning starts.

Note

- Click (Information) to display a dialog box showing the document type and other details of the current scan settings.
- How ScanGear behaves after scanning is complete can be set from **Status of ScanGear dialog after scanning** on the **Scan** tab of the **Preferences** dialog box.

Related Topic

➡ **Basic Mode** Tab

ScanGear (Scanner Driver) Screens

- Basic Mode Tab
- Advanced Mode Tab
- Preferences Dialog Box

Basic Mode Tab

Use the **Basic Mode** tab to scan easily by following these simple on-screen steps.

This section describes the settings and functions available on the **Basic Mode** tab.

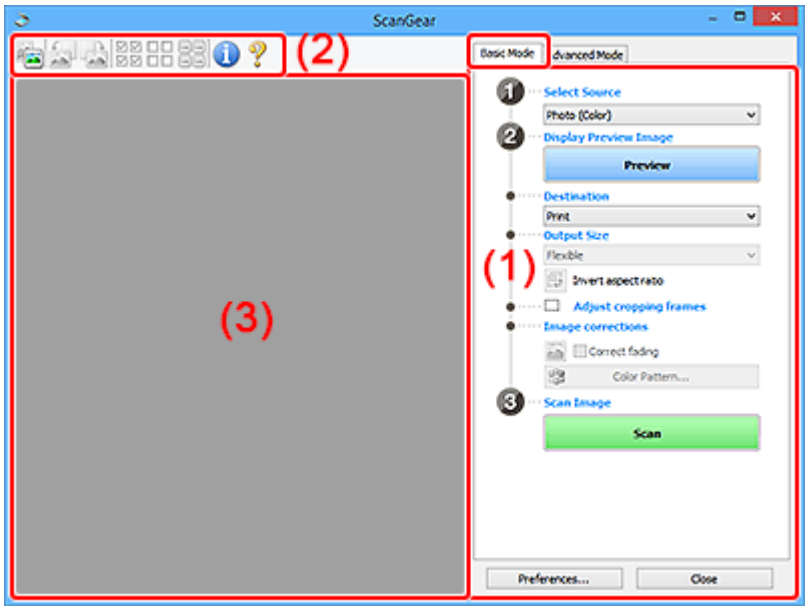

- (1) Settings and Operation Buttons
- (2) Toolbar
- (3) Preview Area

Note

- The displayed items vary by document type and view.
- Preview is not available when scanning from the ADF (Auto Document Feeder).

(1) Settings and Operation Buttons

Select Source

Photo (Color)

Scan color photos.

Magazine (Color)

Scan color magazines.

Document (Color)

Scan documents in color.

Document (Grayscale)

Scan documents in black and white.

Document (Color) ADF Simplex

Scan documents from the ADF in color.

Document (Grayscale) ADF Simplex

Scan documents from the ADF in black and white.

Document (Color) ADF Duplex (only for models supporting ADF duplex scanning)

Scan both sides of documents from the ADF in color.

Document (Grayscale) ADF Duplex (only for models supporting ADF duplex scanning)

Scan both sides of documents from the ADF in black and white.

Important

- Some applications do not support continuous scanning from the ADF. For details, see the application's manual.

Note

- When you select a document type, the unsharp mask function will be active.
- When you select an option other than the ADF types, the image adjustment function which adjusts images based on the document type will also be active.
- When you select **Magazine (Color)**, the descreen function will be active.

Display Preview Image

Preview

Performs a trial scan.

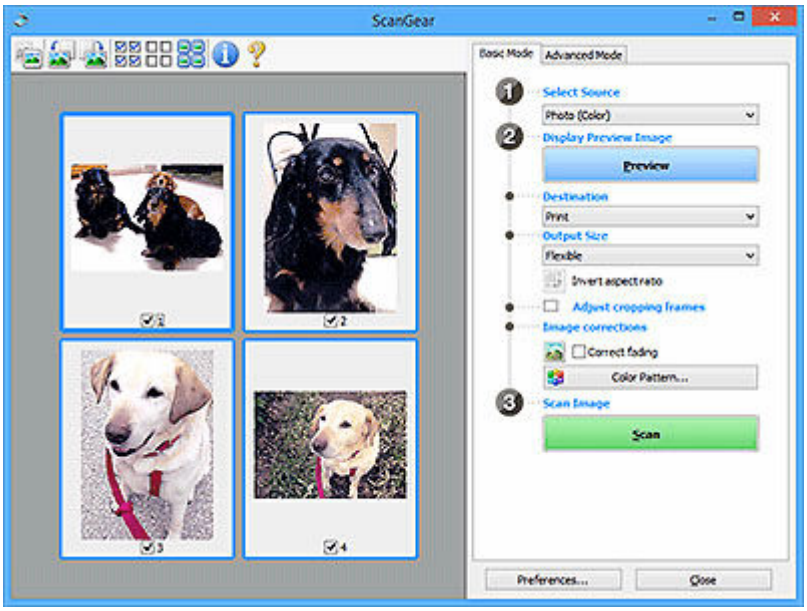

Note

- When using the machine for the first time, scanner calibration starts automatically. Wait a while until the preview image appears.

Destination

Select what you want to do with the scanned image.

Print

Select this to print the scanned image on a printer.

Image display

Select this to view the scanned image on a monitor.

OCR

Select this to use the scanned image with OCR software.

"OCR software" is software that converts text scanned as an image into text data that can be edited in word processors and other programs.

Output Size

Select an output size.

Output size options vary by the item selected in **Destination**.

Flexible

Adjust the cropping frames (scan areas) freely.

In thumbnail view:

Drag the mouse over a thumbnail to display a cropping frame. When a cropping frame is displayed, the portion within the cropping frame will be scanned. When no cropping frame is displayed, each frame is scanned individually.

In whole image view:

When no cropping frame is displayed, the entire Preview area will be scanned. When a cropping frame is displayed, the portion within the cropping frame will be scanned.

Paper Size (such as L or A4)

Select an output paper size. The portion within the cropping frame will be scanned at the size of the selected paper size. Drag the cropping frame to enlarge/reduce it while maintaining the aspect ratio.

Monitor Size (such as 1024 x 768 pixels)

Select an output size in pixels. A cropping frame of the selected monitor size will appear and the portion within the cropping frame will be scanned. Drag the cropping frame to enlarge/reduce it while maintaining the aspect ratio.

Add/Delete...

Displays the **Add/Delete the Output Size** dialog box for specifying custom output sizes. This option can be selected when **Destination** is **Print** or **Image display**.

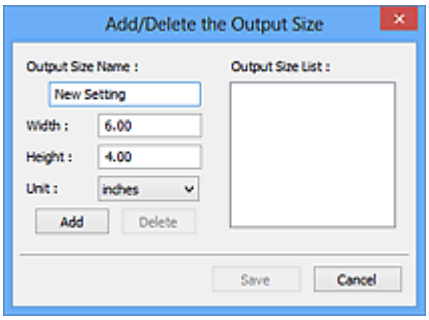

In the **Add/Delete the Output Size** dialog box, multiple output sizes can be specified and then saved at one time. Saved items will be registered to the **Output Size** list and can be selected, along with the predefined items.

Adding:

Enter **Output Size Name**, **Width**, and **Height**, and then click **Add**. For **Unit**, select **inches** or **mm** if **Destination** is **Print**; if it is **Image display**, only **pixels** can be selected. The name of the added size appears in **Output Size List**. Click **Save** to save the items listed in **Output Size List**.

Deleting:

Select the output size you want to delete in **Output Size List**, and then click **Delete**. Click **Save** to save the items listed in **Output Size List**.

Important

- Predefined output sizes such as **A4** and **1024 x 768 pixels** cannot be deleted.

Note

- Save up to 10 items.
- An error message appears when you enter a value outside the setting range. Enter a value within the setting range.

Note

- For details on whether or how the cropping frame initially appears on a preview image, see **Cropping Frame on Previewed Images** in **Preview** tab of **Preferences** Dialog Box.

Invert aspect ratio

Available when **Output Size** is set to anything but **Flexible**.

Click this button to rotate the cropping frame. Click again to return it to the original orientation.

Adjust cropping frames

Adjust the scan area within the Preview area.

If an area is not specified, the document will be scanned at the document size (Auto Crop). If an area is specified, only the portion in the cropping frame will be scanned.

➡ Adjusting Cropping Frames (ScanGear)

Image corrections

Correct the image to be scanned.

Important

- **Apply Auto Document Fix** and **Correct fading** are available when **Recommended** is selected on the **Color Settings** tab of the **Preferences** dialog box.

Note

- Available functions vary by the document type selected in **Select Source**.

Apply Auto Document Fix

Sharpens text in a document or magazine for better readability.

Important

- Scanning may take longer than usual when this checkbox is selected.
- The color tone may change from the source image due to corrections. In that case, deselect the checkbox and scan.
- Correction may not be applied properly if the scan area is too small.

Correct fading

Corrects photos that have faded with time or have a colorcast.

Correct gutter shadow

Corrects shadows that appear between pages when scanning open booklets.

Important

- Be sure to see **Gutter Shadow Correction** for precautions and other information on using this function.

Color Pattern...

Adjust the image's overall color. Correct colors that have faded due to colorcast or other reasons and reproduce natural colors while previewing color changes.

➡ Adjusting Colors Using a Color Pattern

Important

- This setting is not available when **Color Matching** is selected on the **Color Settings** tab of the **Preferences** dialog box.

Scan Image

Scan

Starts scanning.

Note

- When scanning starts, the progress appears. To cancel the scan, click **Cancel**.

Preferences...

Displays the **Preferences** dialog box for making scan/preview settings.

Close

Closes ScanGear (scanner driver).

(2) Toolbar

Adjust or rotate preview images. The buttons displayed on the Toolbar vary by view.

In thumbnail view:

In whole image view:

(Thumbnail) / **(Whole Image)**

Switches the view in the Preview area.

➡ (3) Preview Area

(Rotate Left)

Rotates the preview image 90 degrees counter-clockwise.

- The result will be reflected in the scanned image.

- The image returns to its original state when you preview again.

(Rotate Right)

Rotates the preview image 90 degrees clockwise.

- The result will be reflected in the scanned image.
- The image returns to its original state when you preview again.

(Auto Crop)

Displays and adjusts the cropping frame automatically to the size of the document displayed in the Preview area. The scan area is reduced every time you click this button if there are croppable areas within the cropping frame.

(Check All Frames)

Available when two or more frames are displayed.

Selects the checkboxes of the images in thumbnail view.

(Uncheck All Frames)

Available when two or more frames are displayed.

Deselects the checkboxes of the images in thumbnail view.

(Select All Frames)

Available when two or more frames are displayed.

Selects the images in thumbnail view and outlines them in blue.

(Select All Cropping Frames)

Available when two or more cropping frames are specified.

Turns the cropping frames into thick broken lines and applies the settings to all of them.

(Remove Cropping Frame)

Removes the selected cropping frame.

(Information)

Displays the version of ScanGear, along with the document type and other details of the current scan settings.

(Open Guide)

Opens this page.

(3) Preview Area

This is where a trial image appears after you click **Preview**. The results of image corrections, color adjustments, and other settings made in (1) Settings and Operation Buttons are also reflected.

When (Thumbnail) is displayed on Toolbar:

Cropping frames are specified according to the document size, and thumbnails of scanned images appear. Only the images with the checkbox selected will be scanned.

Note

- When multiple images are previewed, different outlines indicate different selection status.
  - Focus Frame (thick blue outline): The displayed settings will be applied.
  - Selected Frame (thin blue outline): The settings will be applied to the Focus Frame and Selected Frames simultaneously. To select multiple images, click them while pressing the Ctrl key.
  - Unselected (no outline): The settings will not be applied.
- Double-click a frame to enlarge the image. Click (Frame Advance) at the bottom of the screen to display the previous or next frame. Double-click the enlarged frame again to return it to its original state.

When (Whole Image) is displayed on Toolbar:

Items on the Platen are scanned and appear as a single image. All portions in the cropping frames will be scanned.

Note

- Create cropping frame(s) on the displayed image. In thumbnail view, one cropping frame can be created per image. In whole image view, multiple cropping frames can be created.

  ➡ Adjusting Cropping Frames (ScanGear)

Related Topic

➡ Scanning in Basic Mode

Advanced Mode Tab

This mode allows you to make advanced scan settings such as the color mode, output resolution, image brightness, and color tone.

This section describes the settings and functions available on the **Advanced Mode** tab.

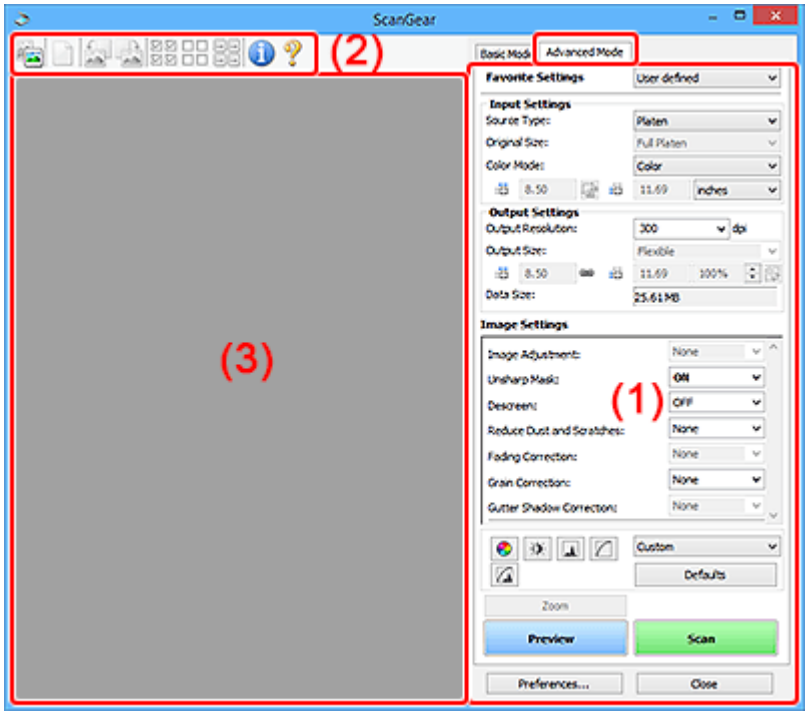

- (1) Settings and Operation Buttons
- (2) Toolbar
- (3) Preview Area

Important

- The displayed items vary depending on your model, document type, and view.
- The preview function is not available when scanning from the ADF (Auto Document Feeder).

(1) Settings and Operation Buttons

Favorite Settings

You can name and save a group of settings (Input Settings, Output Settings, Image Settings, and Color Adjustment Buttons) on the **Advanced Mode** tab, and load it as required. It is convenient to save a group of settings if you will be using it repeatedly. You can also use this to reload the default settings.

Select **Add/Delete...** from the pull-down menu to open the **Add/Delete Favorite Settings** dialog box.

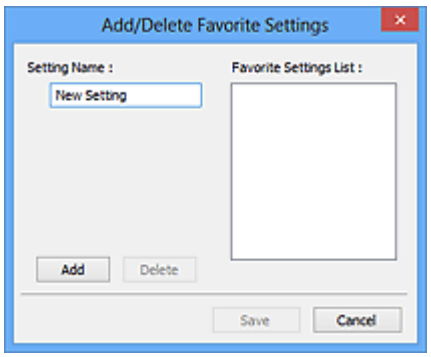

Enter **Setting Name** and click **Add**; the name appears in **Favorite Settings List**.

When you click **Save**, the item appears in the **Favorite Settings** list and can be selected, along with the predefined items.

To delete an item, select it in **Favorite Settings List** and click **Delete**. Click **Save** to save the settings displayed in **Favorite Settings List**.

Note

- You can set **Add/Delete...** in **Favorite Settings** after preview.
- Save up to 10 items.

Input Settings

Specify the input settings such as the document type and size.

Output Settings

Specify the output settings such as the output resolution and size.

Image Settings

Enable/disable various image correction functions.

Color Adjustment Buttons

Fine corrections to the image brightness and color tones can be made including adjustments to the image's overall brightness or contrast and adjustments to its highlight and shadow values (histogram) or balance (tone curve).

Zoom

Zooms in on a frame, or zooms in on the image in the area specified with a cropping frame (scan area). When zoomed in, **Zoom** changes to **Undo**. Click **Undo** to return the display to its non-magnified state.

In thumbnail view:

When multiple images are displayed in thumbnail view, clicking this button zooms in on the selected frame. Click (Frame Advance) at the bottom of the screen to display the previous or next frame.

Note

- You can also zoom in on an image by double-clicking the frame. Double-click the enlarged frame again to return it to its original state.

In whole image view:

Rescans the image in the area specified with a cropping frame at higher magnification.

Note

- **Zoom** rescans the document and displays high-resolution image in Preview.
- (Enlarge/Reduce) on the Toolbar zooms in on the preview image quickly. However, the resolution of the displayed image will be low.

Preview

Performs a trial scan.

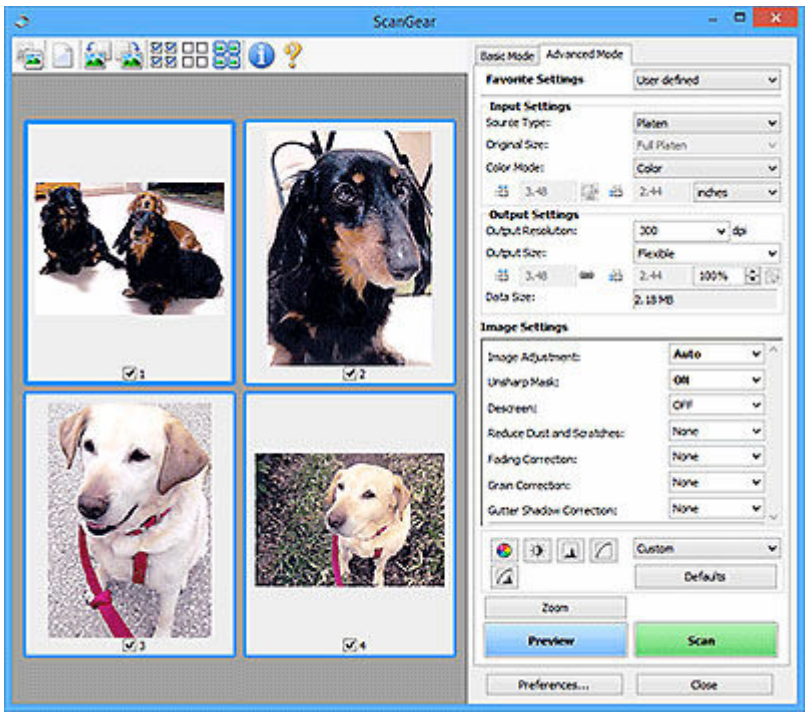

Scan

Starts scanning.

Note

- When scanning starts, the progress appears. To cancel the scan, click **Cancel**.
- When scanning is completed, a dialog box prompting you to select the next action may appear. Follow the prompt to complete. For details, see **Status of ScanGear dialog after scanning** in **Scan** tab of **Preferences** dialog box.
- It will take time to process the images if the total size of the scanned images exceeds a certain size. In that case, a warning message appears; it is recommended that you reduce the total size. To continue, scan in whole image view.

Preferences...

Displays the **Preferences** dialog box for making scan/preview settings.

Close

Closes ScanGear (scanner driver).

(2) Toolbar

Adjust or rotate preview images. The buttons displayed on the Toolbar vary by view.

In thumbnail view:

In whole image view:

(Thumbnail) / **(Whole Image)**

Switches the view in the Preview area.

➡ (3) Preview Area

(Clear)

Deletes the preview image from the Preview area.

It also resets the Toolbar and color adjustment settings.

(Crop)

Allows you to specify the scan area by dragging the mouse.

 (Move Image)

Allows you to drag the image until the part you want to see is displayed when an image enlarged in the Preview area does not fit in the screen. You can also move the image using the scroll bars.

(Enlarge/Reduce)

Allows you to zoom in on the Preview area by clicking the image. Right-click the image to zoom out.

(Rotate Left)

Rotates the preview image 90 degrees counter-clockwise.

- The result will be reflected in the scanned image.
- The image returns to its original state when you preview again.

(Rotate Right)

Rotates the preview image 90 degrees clockwise.

- The result will be reflected in the scanned image.
- The image returns to its original state when you preview again.

(Auto Crop)

Displays and adjusts the cropping frame automatically to the size of the document displayed in the Preview area. The scan area is reduced every time you click this button if there are croppable areas within the cropping frame.

(Check All Frames)

Available when two or more frames are displayed.

Selects the checkboxes of the images in thumbnail view.

(Uncheck All Frames)

Available when two or more frames are displayed.

Deselects the checkboxes of the images in thumbnail view.

(Select All Frames)

Available when two or more frames are displayed.

Selects the images in thumbnail view and outlines them in blue.

(Select All Cropping Frames)

Available when two or more cropping frames are specified.

Turns the cropping frames into thick broken lines and applies the settings to all of them.

(Remove Cropping Frame)

Removes the selected cropping frame.

(Information)

Displays the version of ScanGear, along with the document type and other details of the current scan settings.

(Open Guide)

Opens this page.

(3) Preview Area

This is where a trial image appears after you click **Preview**. The results of image corrections, color adjustments, and other settings made in (1) Settings and Operation Buttons are also reflected.

When (Thumbnail) is displayed on Toolbar:

Cropping frames are specified according to the document size, and thumbnails of scanned images appear. Only the images with the checkbox selected will be scanned.

Note

- When multiple images are previewed, different outlines indicate different selection status.
  - Focus Frame (thick blue outline): The displayed settings will be applied.
  - Selected Frame (thin blue outline): The settings will be applied to the Focus Frame and Selected Frames simultaneously. To select multiple images, click them while pressing the Ctrl key.
  - Unselected (no outline): The settings will not be applied.

When (Whole Image) is displayed on Toolbar:

Items on the Platen are scanned and appear as a single image. All portions in the cropping frames will be scanned.

Note

- Create cropping frame(s) on the displayed image. In thumbnail view, one cropping frame can be created per image. In whole image view, multiple cropping frames can be created.

  ➡ Adjusting Cropping Frames (ScanGear)

Related Topic

➡ Scanning in Advanced Mode
➡ Scanning Multiple Documents from the ADF (Auto Document Feeder) in Advanced Mode

General Notes (Scanner Driver)

ScanGear (scanner driver) is subject to the following restrictions. Keep these points in mind when using it.

Scanner Driver Restrictions

- When using the NTFS file system, the TWAIN data source may not be invoked. This is because the TWAIN module cannot be written to the winnt folder for security reasons. Contact the computer's administrator for help.
- Some computers (including laptops) connected to the machine may not resume correctly from standby mode. In that case, restart the computer.
- Do not connect two or more scanners or multifunction printers with scanner function to the same computer simultaneously. If multiple scanning devices are connected, you cannot scan from the operation panel or scanner buttons of the machine and also may experience errors while accessing the devices.
- Calibration may take time if the machine is connected via USB 1.1.
- Scanning may fail if the computer has resumed from sleep or standby mode. In that case, follow these steps and scan again.

  If your model has no power button, perform Step 2 only.

  1. Turn off the machine.
  2. Exit ScanGear, then disconnect the USB cable from the computer and reconnect it.
  3. Turn on the machine.

  If scanning still fails, restart the computer.

- ScanGear cannot be opened in multiple applications at the same time. Within an application, ScanGear cannot be opened for the second time when it is already open.
- Be sure to close the ScanGear window before closing the application.
- When using a network compatible model by connecting to a network, the machine cannot be accessed from multiple computers at the same time.
- When using a network compatible model by connecting to a network, scanning takes longer than usual.
- Make sure that you have adequate disk space available when scanning large images at high resolutions. For example, at least 300 MB of free space is required to scan an A4 document at 600 dpi in full-color.
- ScanGear and WIA driver cannot be used at the same time.
- Do not enter the computer into sleep or hibernate state during scanning.

Applications with Restrictions on Use

- Some applications may not display the TWAIN user interface. In that case, refer to the application's manual and change the settings accordingly.
- Some applications do not support continuous scanning of multiple documents. In some cases, only the first scanned image is accepted, or multiple images are scanned as one image. For such applications, do not scan multiple documents from the ADF (Auto Document Feeder).
- To import scanned images into Microsoft Office 2000, first save them using Scan Utility, then import the saved files from the **Insert** menu.

- When scanning Platen size images into Microsoft Office 2003 (Word, Excel, PowerPoint, etc.), click **Custom Insert** in the **Insert Picture from Scanner or Camera** screen. Otherwise, images may not be scanned correctly.
- When scanning images into Microsoft Office 2007/Microsoft Office 2010 (Word, Excel, PowerPoint, etc.), use Microsoft Clip Organizer.
- Images may not be scanned correctly in some applications. In that case, increase the operating system's virtual memory and retry.
- When image size is too large (such as when scanning large images at high resolution), your computer may not respond or the progress bar may remain at 0 % depending on the application. In that case, cancel the action (for example by clicking **Cancel** on the progress bar), then increase the operating system's virtual memory or reduce the image size/resolution and retry. Alternatively, scan the image via Scan Utility first, then save and import it into the application.

Scanning Tips

- **Positioning Originals (Scanning from Computer)**
- **Network Scan Settings**
  - Network Scanner Selector EX2 Menu and Setting Screen

Positioning Originals (Scanning from Computer)

This section describes how to load originals on the platen or ADF (Auto Document Feeder) for scanning. If items are not placed correctly they may not be scanned correctly.

- Placing Items (Platen)
- Placing Documents (ADF (Auto Document Feeder))

Placing Items (Platen)

Place items as described below to scan by detecting the item type and size automatically.

Important

- Depending on your model, the function to scan by automatically detecting the item type and size does not appear.
- When scanning by specifying the paper size in Scan Utility or ScanGear (scanner driver), align an upper corner of the item with the corner at the arrow (alignment mark) of the platen.
- Reflective disc labels may not be scanned as expected.
- If scanned by detecting the item type and size automatically, the response may differ. In that case, adjust the cropping frame (scan area) manually.
- Large items (such as A4 size photos) that cannot be placed away from the edges/arrow (alignment mark) of the platen may be saved as PDF files. To save in a format other than PDF, scan by specifying the data format.

- Loading Originals on Platen
- Loading Based on Use

Placing Documents (ADF (Auto Document Feeder))

To scan documents using the ADF, load the documents as described below.

- Loading Documents in the ADF (Auto Document Feeder)

Network Scan Settings

You can connect your scanner or printer to a network to share it among multiple computers or scan images into a specified computer.

Important

- Multiple users cannot scan at the same time.

Note

- Complete the network settings of your scanner or printer beforehand by following the instructions on our website.
- With network connection, scanning takes longer than USB connection.

Complete the following settings to enable scanning over a network.

Specifying Your Scanner or Printer

Use Network Scanner Selector EX2 to specify the scanner you want to use. By specifying the scanner, you can scan over a network from your computer or the operation panel.

Important

- If the product you want to use is changed with Network Scanner Selector EX2, the product used for scanning with Scan Utility changes as well. The product for scanning from the operation panel also changes.

  If your scanner or printer is not selected in Scan Utility, check that it is selected with Network Scanner Selector EX2.

  Refer to "Network Scanner Selector EX2 Menu and Setting Screen" for details.
- To scan from the operation panel, specify your scanner or printer with Network Scanner Selector EX2 beforehand.

1. Check that Network Scanner Selector EX2 is running.

   If Network Scanner Selector EX2 is running, (Network Scanner Selector EX2) appears in the notification area on the desktop. Click to check the hidden icons as well.

   Note

   - If the icon is not displayed in the notification area on the desktop, follow the procedure below to start.

     – **Windows 11/Windows 10:**

       From the **Start** menu, click (**All apps** >) **Canon Utilities** > **Network Scanner Selector EX2**.

     – **Windows 8.1:**

       Click **Network Scanner Selector EX2** on the Start screen.

If **Network Scanner Selector EX2** is not displayed on the Start screen, select the **Search** charm, then search for "Network Scanner Selector EX2".

– **Windows 7:**

From the **Start** menu, click **All Programs** > **Canon Utilities** > **Network Scanner Selector EX2** > **Network Scanner Selector EX2**.

The icon appears in the notification area on the desktop, and the Scan-from-PC Settings screen appears. In that case, skip ahead to Step 3.

2. In the notification area on the desktop, right-click (Network Scanner Selector EX2), then select **Settings...**.

   The Scan-from-PC Settings screen appears.

3. Select your scanner or printer from **Scanners**.

   Normally, the MAC address of your scanner or printer is already selected after the network setup. In that case, you do not need to select it again.

   Important

   - If multiple scanners exist on the network, multiple model names appear. In that case, you can select one scanner per model.

4. Click **OK**.

Note

- The scanner selected in the Scan-from-PC Settings screen will be automatically selected in the Scan-from-Operation-Panel Settings screen as well.

Setting for Scanning with Scan Utility

To scan from Scan Utility using a scanner or printer connected to a network, specify your scanner or printer with Network Scanner Selector EX2, then follow the steps below to change the connection status between it and the computer.

1. Start Scan Utility.

2. Select "Canon XXX series Network" (where "XXX" is the model name) for **Scanner**.

3. Click **Settings...** to use another scanner connected to a network.

4. Click (General Settings), then click **Select** in **Product Name**.

   The Scan-from-PC Settings screen of Network Scanner Selector EX2 appears.

   Select the scanner you want to use and click **OK**.

5. In the **Settings (General Settings)** dialog box, click **OK**.

   The Scan Utility main screen reappears. You can scan via a network connection.

Setting for Scanning from the Operation Panel

You can make the setting for scanning from the operation panel.

Important

- Set Scan Utility to use your scanner or printer via a network connection beforehand.

  ➡ Setting for Scanning with Scan Utility

1. Check that Network Scanner Selector EX2 is running.

   If Network Scanner Selector EX2 is running, (Network Scanner Selector EX2) appears in the notification area on the desktop. Click to check the hidden icons as well.

   ### Note

   - If the icon is not displayed in the notification area on the desktop, follow the procedure below to start.

     – **Windows 11/Windows 10:**

       From the **Start** menu, click (**All apps** >) **Canon Utilities** > **Network Scanner Selector EX2**.

     – **Windows 8.1:**

       Click **Network Scanner Selector EX2** on the Start screen.

       If **Network Scanner Selector EX2** is not displayed on the Start screen, select the **Search** charm, then search for "Network Scanner Selector EX2".

     – **Windows 7:**

       From the **Start** menu, click **All Programs** > **Canon Utilities** > **Network Scanner Selector EX2** > **Network Scanner Selector EX2**.

     The icon appears in the notification area on the desktop, and the Scan-from-PC Settings screen appears. In that case, skip ahead to Step 3.

2. In the notification area on the desktop, right-click (Network Scanner Selector EX2), then select **Settings...**.

   The Scan-from-PC Settings screen appears.

3. Click **Scan-from-Operation-Panel Settings**.

   The Scan-from-Operation-Panel Settings screen appears.

4. Select your scanner or printer from **Scanners** and click **OK**.

   Select the MAC address of your scanner or printer.

Note

- When multiple scanners are connected via a network, you can select up to three scanners.

5. In the Scan-from-PC Settings screen, click **OK**.

Note

- If your scanner or printer does not appear, check the following, click **OK** to close the screen, then reopen it and try selecting again.
  - MP Drivers is installed
  - Network settings of your scanner or printer is completed after installing the MP Drivers
  - Network communication between your scanner or printer and computer is enabled

  If the problem is still not solved, see Network Communication Problems.

Scanning in macOS

Scanning According to Item Type or Purpose (IJ Scan Utility Lite)

- IJ Scan Utility Lite Features
- Scanning Easily (Auto Scan)
- Scanning Documents and Photos

Scanning Tips

- Positioning Originals (Scanning from Computer)

Important

- Available functions and settings vary depending on your scanner or printer.

Scanning According to Item Type or Purpose (IJ Scan Utility Lite)

- IJ Scan Utility Lite Features
- Scanning Easily (Auto Scan)
- Scanning Documents and Photos

Important

- Available functions and settings vary depending on your scanner or printer.

IJ Scan Utility Lite Features

Use IJ Scan Utility Lite to scan and save documents, photos, or other items at one time by simply clicking the corresponding icon.

Important

- The displayed items and available functions vary depending on your scanner or printer.

Multiple Scanning Modes

Auto allows for one click scanning with default settings for various items. **Document** will sharpen text in a document or magazine for better readability, and **Photo** is best suited for scanning photos.

Note

- For details on the IJ Scan Utility Lite main screen, see IJ Scan Utility Lite Main Screen.

Save Scanned Images Automatically

Scanned images are automatically saved to a preset folder. The folder can be changed as needed.

Note

- The default save folder is the **Pictures** folder.
- For how to specify a folder, see Settings Dialog.

Application Integration

Scanned images can be sent to other applications. For example, display scanned images in your favorite graphics application, attach them to e-mails, or extract text from images.

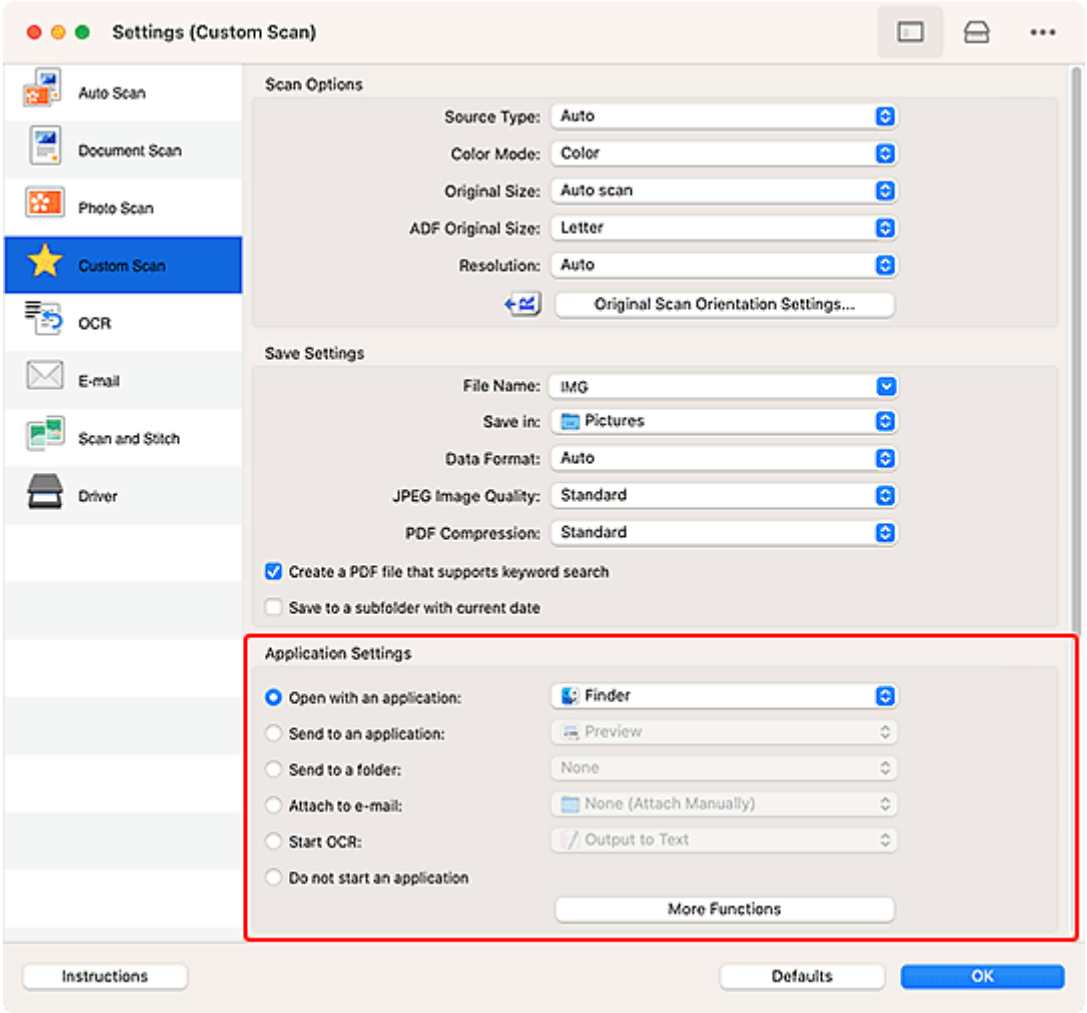

Note

- To set the applications to integrate with, see Settings Dialog.

Scanning Easily (Auto Scan)

Auto Scan allows for automatic detection of the type of the item placed on the platen or ADF (Auto Document Feeder).

Important

- This function is not supported depending on your model.
- The following types of items may not be scanned correctly. In that case, adjust the cropping frames (selection boxes; scan areas) in the screen displayed by clicking **Driver** in the IJ Scan Utility Lite main screen, and then scan again.
  - Photos with a whitish background
  - Items printed on white paper, hand-written text, business cards, and other unclear items
  - Thin items
  - Thick items
- When scanning two or more documents from the ADF, place documents of the same size.

1. Check that scanner or printer is turned on.

2. Place items on platen or ADF.

   ➡ Positioning Originals (Scanning from Computer)

3. Start IJ Scan Utility Lite.

4. Click **Auto** in the IJ Scan Utility Lite main screen.

   Scanning starts.

Note

- To cancel the scan, click **Cancel**.
- Use the Settings (Scanning from a Computer) dialog to set where to save the scanned images and to make advanced scan settings.
- To scan a specific item type, see the following pages.

  ➡ Scanning Documents and Photos
  ➡ Scanning with Favorite Settings
  ➡ Scanning Multiple Documents at One Time from the ADF (Auto Document Feeder)

Scanning Documents and Photos

Scan items placed on the platen with settings suitable for documents or photos.

Save documents in formats such as PDF and JPEG, and photos in formats such as JPEG and TIFF.

1. Place the item on the platen.

   ➡ Positioning Originals (Scanning from Computer)

2. Start IJ Scan Utility Lite.

3. To specify the paper size, resolution, PDF settings, etc., click **Settings...**, and then set each item in the Settings (Scanning from a Computer) dialog.

   Note

   - Once settings are made in the Settings dialog, the same settings can be used for scanning from the next time.
   - In the Settings dialog, specify image processing settings such as slant correction, set where to save the scanned images, and more, as needed.

   When setting is completed, click **OK**.

4. Click **Document** or **Photo** in the IJ Scan Utility Lite main screen.

   Scanning starts.

Note

- To cancel the scan, click **Cancel**.

Scanning Tips

- Positioning Originals (Scanning from Computer)

Positioning Originals (Scanning from Computer)

This section describes how to load originals on the platen or ADF (Auto Document Feeder) for scanning. If items are not placed correctly they may not be scanned correctly.

Important

- When using a personal scanner in the upright position, the item type may not be detected automatically. In that case, specify the item type in IJ Scan Utility Lite and scan.

➡ Placing Items (Platen)
➡ Placing Documents (ADF (Auto Document Feeder))
➡ Placing Items (When Using Stand)

Placing Items (Platen)

Place items as described below to scan by detecting the item type and size automatically.

Important

- Depending on your model, the function to scan by automatically detecting the item type and size does not appear.
- When scanning by specifying the paper size, align an upper corner of the item with the corner at the arrow (alignment mark) of the platen.
- Reflective disc labels may not be scanned as expected.
- If scanned by detecting the item type and size automatically, the response may differ. In that case, adjust the cropping frame (selection box) manually.
- Large items (such as A4 size photos) that cannot be placed away from the edges/arrow (alignment mark) of the platen may be saved as PDF files. To save in a format other than PDF, scan by specifying the data format.

Inkjet All-In-One printer:

➡ Loading Originals on Platen
➡ Loading Based on Use

Personal scanner:

➡ Items You Can Place & How to Place Items

Placing Documents (ADF (Auto Document Feeder))

To scan documents using the ADF, load the documents as described below.

➡ Loading Documents in the ADF (Auto Document Feeder)

Placing Items (When Using Stand)

1. Place item on platen.

1. Open the document cover.

2. Place the item with the side to scan facing the platen, and then align it with the alignment mark.

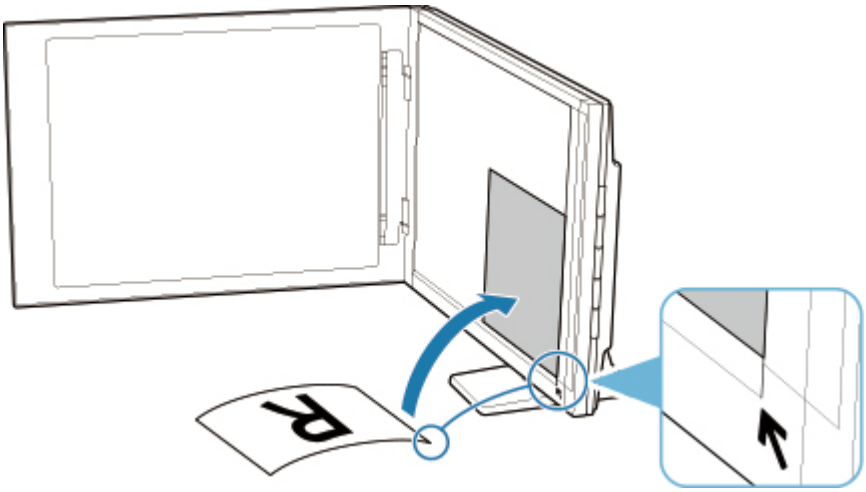

Important

- If you open the document cover wide, the scanner may fall over.
- Portions placed over (A) (0.094 inch (2.4 mm) from the left edge of the platen) or (B) (0.106 inch (2.7 mm) from the front edge) cannot be scanned.

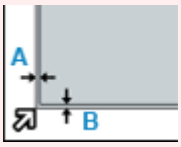

2. Gently close document cover.

While scanning, hold the document cover gently with your hand to keep it closed.

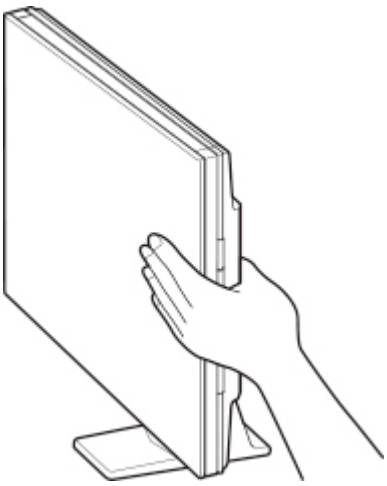

Important

- Keep these points in mind when using the scanner in the upright position.
  - Do not subject the scanner to vibration during operation. The correct image results may not be obtained (for example, images may blur).

- The item type may not be detected automatically. In that case, specify the item type in IJ Scan Utility Lite and scan.

Attaching Scanned Images to E-MAIL to Send

- **Sending Scanned Data as E-Mail from Computer**
- **Sending Scanned Data as E-Mail from Printer**

Saving Scanned Images to Cloud Storage Folders

- **Forwarding Scanned Data to Shared Folder on Computer**

Faxing

- Preparing for Faxing
- Sending Faxes
- Receiving Faxes
- Other Useful Fax Functions

Preparing for Faxing

Connect the printer to the telephone line and set up the printer before using the faxing functions. Then specify the basic setting such as sender information, date/time, and daylight saving time.

Important

- If the Power Disconnects:

  If there is a power failure or the printer is accidentally unplug the power cord and the printer is turned off during the printer setup or after making each setting, the settings will be as follows.

  - The settings for user information, directory and date/time will be retained.

  If the power disconnects, the following will apply:

  - You will not be able to send or receive faxes, make copies, or scan originals.
  - When you are connecting the telephone, whether or not you can use it depends upon your telephone line or telephone.

Setting Up Printer

The printer must be set up depending on your telephone line and use of the faxing function.

All Setup

FAX Setup Guide

Individual Setup

Step 1 Connecting Telephone Line

Step 2 Setting Telephone Line Type

Step 3 Setting Receive Mode

Step 4 Setting Sender Information

Note

- You can set the fax setting according to the instruction on the touch screen.

  ➡ Easy setup

  If you set up according to the instruction on the touch screen, the receive mode is set to **TEL priority mode** or **Fax only mode**. To receive faxes with **DRPD** or **Network switch**, change the receive mode.

  ➡ Setting Receive Mode

Connecting Telephone Line

The connection method differs depending on your telephone line.

- If you connect the printer to wall telephone line directly/If you connect the printer with the xDSL splitter:
  - ➡ Basic Connection (Connecting with General Telephone line)
- If you connect the printer to another line such as an xDSL:
  - ➡ Connecting Various Lines

If the connection is incorrect, the printer cannot send/receive faxes. Connect the printer correctly.

Important

- Do not connect fax devices and/or telephones in parallel (US and Canada only).

  If two or more fax devices and/or telephones are connected in parallel, the following problems may occur and the printer may not operate properly.

  - If you pick up the handset of the telephone that is connected in parallel during fax transmission or reception, the fax image may be corrupted or a communication error may occur.
  - Such services as Caller ID, etc. may not operate properly on the telephone.

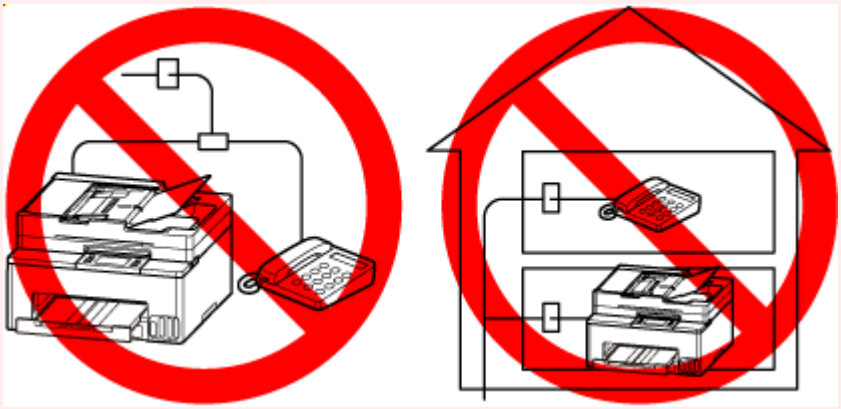

  If you cannot avoid parallel connections, set the receive mode to **TEL priority mode**, understanding that the above problems may occur. You will only be able to receive faxes manually.

Basic Connection (Connecting with General Telephone line)

Make sure that the printer is turned off, connect one end of supplied telephone line cable to the telephone line jack near the "LINE" mark of the printer, then connect the other end to the telephone line jack on the wall or to the telephone line jack of the xDSL splitter.

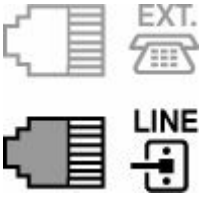

When you connect the telephone to the printer, make sure that the printer is turned off, connect one end of the modular cable to the external device jack near the "EXT." mark of the printer, then connect the other end to the telephone line jack of the telephone.

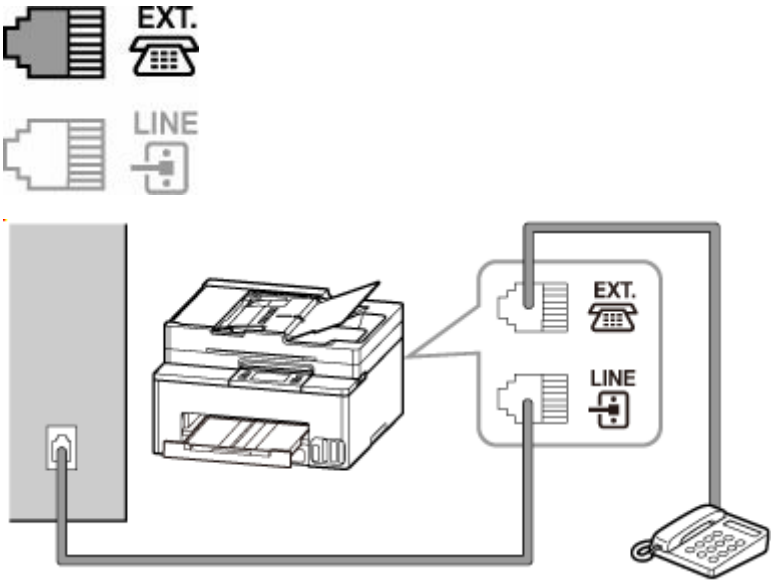

Important

- Be sure to connect the telephone line before the printer is turned on.

  If you connect the telephone line when the printer is turned on, turn the printer off and unplug the power cord. Wait for 1 minute then connect the telephone line and power plug.

Note

- Refer to Rear View for the position of the telephone line jack and the external device jack.
- Before connecting a telephone or answering machine, remove the Telephone connector cap.
- **For users in the UK:**

  If the connector of the external device cannot be connected to the jack on the printer, you will need to purchase a B.T. adapter to connect as follows:

  Attach the B.T. adapter to the modular cable connecting the external device, then connect the B.T. adapter to the external device jack.

Connecting Various Lines

This section introduces how to connect various lines.

These are examples and could not be guaranteed to suit every connecting condition. For details, refer to the instruction manual supplied with the network device (control devices such as an xDSL (Digital Subscriber Line) modem or terminal adapter) you are connecting to this printer.

Note

- xDSL is the generic term for the high speed digital communication technology with telephone line such as ADSL/HDSL/SDSL/VDSL.

- **Connecting to an Internet Telephone**

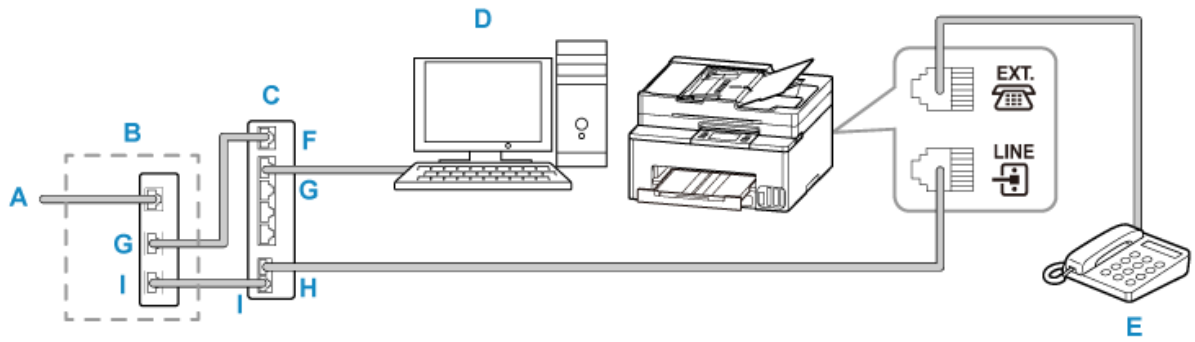

A: Digital Subscriber Line
B: xDSL modem (splitter may not be built-in to the modem)
C: Broadband router compatible with Internet Telephone
D: Computer
E: Telephone or answering machine
F: WAN (Wide Area Network) port
G: LAN (Local Area Network) port
H: TEL port
I: LINE port

* Port configurations and names may vary depending on the product.

Note

- When connecting to the xDSL line, select the same line type as you are subscribing to in **Telephone line type**.

  ➡ Setting Telephone Line Type

- **Connecting to an xDSL**

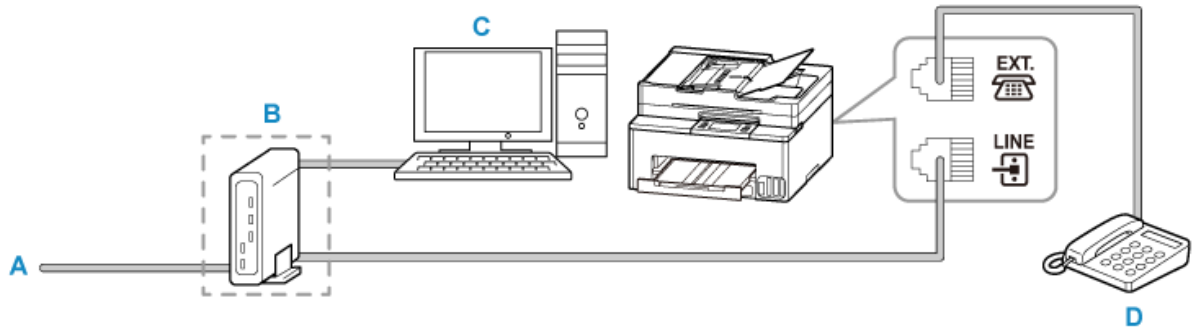

A: Analog Subscriber Line
B: xDSL modem (splitter may not be built-in to the modem)
C: Computer
D: Telephone or answering machine

Important

- When the splitter is not built-in to the xDSL modem, do not branch the telephone line before the splitter (wall side). And also, do not connect splitters in parallel. The printer may not be able to operate properly.

Note

- When connecting to the xDSL line, select the same line type as you are subscribing to in **Telephone line type**.

  ➡ Setting Telephone Line Type

- **Connecting to an ISDN Line**

  For details on ISDN (Integrated Service Digital Network) connection and settings, refer to the manuals supplied with your terminal adapter or dial-up router.

Setting Telephone Line Type

Before using your printer, make sure you set the correct telephone line type for your telephone line. If you are unsure of your telephone line type, contact your telephone company. For xDSL or ISDN connections, contact the telephone company or service provider to confirm your line type.

Important

- **For users in China:**

  After plugging the power cord and turning on the printer, the telephone line type is selected automatically. However, if the printer is connected to the control device such as an xDSL modem or terminal adapter, the telephone line type may not be selected correctly.

  In this case, set the line type manually.

  For details on how to set the Telephone line type manually in China:

  ➡ Setting the Telephone Line Type Manually in China

Note

- **Telephone line type** will not appear in countries or regions where **Rotary pulse** is not supported.
- You can print USER'S DATA LIST to check the current setting.

  ➡ Summary of Reports and Lists

1. Check that printer is turned on.
2. Select **Setup** on the HOME screen.

   ➡ Using Touch Screen
3. Select **Printer settings**.
4. Select **Fax settings**.
5. Select **Fax user settings**.
6. Select **Telephone line type**.
7. Select a telephone line type.

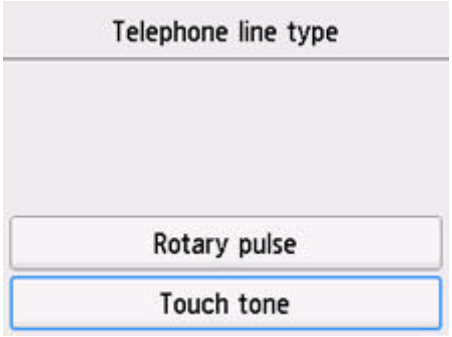

Rotary pulse

Select when your telephone line type is pulse dialing.

Touch tone

Select when your telephone line type is tone dialing.

Setting the Telephone Line Type Manually in China

This section describes the procedure to set the telephone line type manually in China.

1. Check that printer is turned on.

2. Select **Setup** on the HOME screen.

   ➡ Using Touch Screen

3. Select **Printer settings**.

4. Select **Fax settings**.

5. Select **Fax user settings**.

6. Select **Telephone line auto selection**.

   The current telephone line type is displayed.

7. Check current telephone line type, and then select **OK**.

   Note

   - If you do not need to change the telephone line type, press the **HOME** button to return to the HOME screen.

8. Select **OFF**.

9. Select a telephone line type.

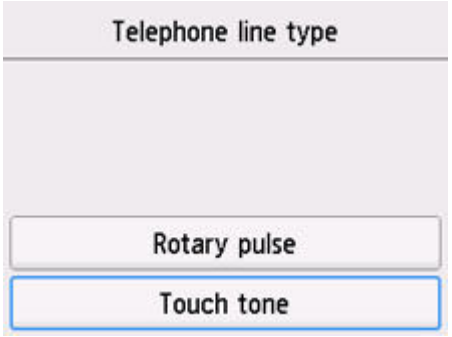

Rotary pulse

Select when your telephone line type is pulse dialing.

Touch tone

Select when your telephone line type is tone dialing.

Setting Receive Mode

Set the receiving operation (receiving mode).

For details on how to set the receive mode:

➡ Setting Receive Mode

You can select the appropriate mode.

For details on the selectable receive mode:

➡ About Receive Mode

For details on the advanced settings of the receive mode:

➡ Advanced Settings of Receive Mode

Note

- The receiving operation procedure varies depending on the selected receive mode.

  For details on receiving method depending on each receive mode:

  ➡ Receiving Faxes

- If you want to use a single telephone line for faxes and voice calls, you need to connect a telephone or an answering machine to the external device jack of this printer.

  For details on how to connect the telephone or the answering machine to the printer:

  ➡ Basic Connection (Connecting with General Telephone line)

Setting Receive Mode

This section describes the procedure to select the receive mode.

1. Check that printer is turned on.

2. Select **Fax** on the HOME screen.

   ➡ Using Touch Screen

3. Select **Function list**.

   The **Function list** screen is displayed.

4. Select **Receive mode settings**.

5. Select a receive mode, and then select **OK**.

   Note

   - By selecting **Advanced**, you can specify the advanced settings of each receive mode.

     For details on the advanced settings of the receive mode:

     ➡ Advanced Settings of Receive Mode

- For details on the receive mode:

  ➡ About Receive Mode

- **DRPD** is available only in the US and Canada.
- **Network switch** may not be available depending on the country or region.
- Refer to Receiving Faxes for information on receiving faxes or the procedure for each receive mode.

About Receive Mode

You can select the receive mode suitable for your fax use conditions: whether you use a dedicated line for fax, etc.

- **Fax only mode**

  Select when not receiving voice calls.

  Receiving operation:

  1. When a fax incomes, the printer will receive the fax automatically.

- **TEL priority mode**

  Select when mainly receiving voice calls (with a telephone or answering machine connected to the printer).

  Receiving operation:

  1. When a call incomes, the telephone will ring.
  2. Pick up the handset.

     If the call is a voice call, talk on the telephone.

     If the call is a fax, hang up the handset after the printer starts receiving the fax.

  Note

  - The telephone may not ring when a call incomes even if it is connected to the printer, depending on the type or settings of the telephone.

- **DRPD or Network switch**

  Select when receiving voice calls (with a telephone or answering machine connected to the printer) and subscribing to a ring pattern detection service provided by your telephone company.

  Receiving operation:

  1. When a call incomes, the telephone will ring.
  2. The printer detects a fax call by the fax ring pattern.

     If the call is a fax, the printer will receive the fax automatically.

     If the printer does not detect the fax ring pattern, the telephone will continue ringing.

Note

- The telephone may not ring when a call incomes even if it is connected to the printers, depending on the type or settings of the telephone.

Advanced Settings of Receive Mode

You can specify the advanced settings of each receive mode.

- **Advanced setting in Fax only mode**

  You can specify the following setting item.

  - **Ring count**

    You can specify the number of times the external device rings when incoming.

    Specify the number of time and select **OK**.

- **Advanced setting in TEL priority mode**

  You can specify the following setting items.

  - **Manual/auto switch: ON/Manual/auto switch: OFF**

    If you select **Manual/auto switch: ON**, the printer automatically receives faxes after the external device rang a specified length of time.

    You can specify the length of time until automatic reception is started.

  - **RX start time**

    You can specify the length of time until automatic reception is started when **Manual/auto switch: ON** is selected. Specify the length of time and select **OK**.

  - **User-friendly RX: ON/User-friendly RX: OFF**

    If you select **User-friendly RX: ON**, the printer automatically switches from telephone calling to fax reception by detecting the fax signal (CNG signal) when you lift the handset of the telephone or the answering device answers. When you have an answering device connected to the printer, select **User-friendly RX: ON** to switch to fax reception automatically after the answering device answers.

    If you select **User-friendly RX: OFF**, the printer does not switch from telephone calling to fax reception automatically even if the printer detects the fax signal (CNG signal). Select **User-friendly RX: OFF** if you want the printer not to switch automatically during a call.

Note

- If you subscribe to Duplex Ringing service in Hong Kong, the number of times the external device rings specified with **Ring count** in **Fax only mode** is available in **TEL priority mode**.

  If you want to specify the number of times the external device rings in **TEL priority mode**, select **Fax only mode** on the **Receive mode settings** screen, specify the number of times the external device rings with **Ring count**, and then switch to **TEL priority mode** in **Receive mode settings**.

- If you subscribe to Duplex Ringing service in Hong Kong, we recommend that you select **Manual/auto switch: OFF**.

- **Advanced setting in DRPD**

  You can specify the following setting items.

  - Ring pattern (**Normal ring**/**Double ring**/**Short-short-long**/**Short-long-short**)

    Sets the distinctive ring pattern of a call that the printer assumes is a fax call.

    If you subscribe to a DRPD service, set the ring pattern to match the pattern assigned by your telephone company.

    ➡ Setting DRPD Ring Pattern (US and Canada only)

  - **Ring count**

    You can specify the number of times the external device rings when incoming.

    Specify the number of time and select **OK**.

- **Advanced setting in Network switch**

  You can specify the following setting item.

  - **Ring count**

    You can specify the number of times the external device rings when incoming.

    Specify the number of time and select **OK**.

Setting the DRPD Ring Pattern (US and Canada only)

If you have subscribed to a Distinctive Ring Pattern Detection (DRPD) service provided by your telephone company, your telephone company will assign two or more telephone numbers with distinctive ring patterns to your single telephone line, allowing you to have different numbers for fax calls and voice calls using only one telephone line. Your printer will automatically monitor the ring pattern, and will automatically receive the fax if the ring pattern is a fax call.

To use DRPD, follow the procedure below to set the fax ring pattern that matches the pattern assigned by your telephone company.

Note

- Contact your local telephone company for detailed information on this service.

1. Check that printer is turned on.

2. Select **Fax** on the HOME screen.

   ➡ Using Touch Screen

3. Select **Function list**.

   The **Function list** screen is displayed.

4. Select **Receive mode settings**.

5. Select **DRPD**.

6. Select **Advanced**.

7. Select ring pattern that your telephone company assigned to your fax number.

8. Specify number of time and select **OK**.

9. Select **OK**.

   The **Function list** screen is displayed.

Setting Sender Information

You can set the sender information such as date/time, unit name, and unit fax/telephone number.

- About Sender Information
- Setting Date and Time
- Setting Daylight Saving Time (Summer Time)
- Registering User Information

About Sender Information

If the unit name and unit fax/telephone number are registered, they are printed with date and time as sender information on the recipient's fax.

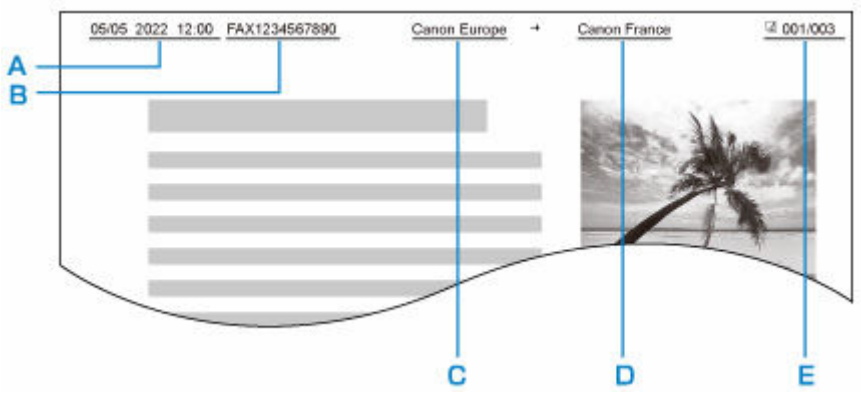

A: Date and time of transmission
B: Unit fax/telephone number
C: Unit name
D: The registered recipient's name is printed when sending faxes.
E: Page number

Note

- You can print USER'S DATA LIST to confirm the sender information you have registered.

  Summary of Reports and Lists

- When sending faxes in black & white, you can select whether to print the sender information inside or outside the image area.

  Specify the setting on **TTI position** in **Advanced fax settings** under **Fax settings**.

  Advanced fax settings

- You can select the date print format from three formats: **YYYY/MM/DD**, **MM/DD/YYYY**, and **DD/MM/YYYY**.

  Select the date print format on **Date display format** under **Other printer settings**.

  Other printer settings

Setting Date and Time

This section describes the procedure to set the date and time.

1. Check that printer is turned on.

2. Select **Setup** on the HOME screen.

   ➡ Using Touch Screen

3. Select **Printer settings**.

4. Select **Other printer settings**.

5. Select **Date/time settings**.

6. Set date.

   1. Select a setting item to change.

   2. Select number to enter.

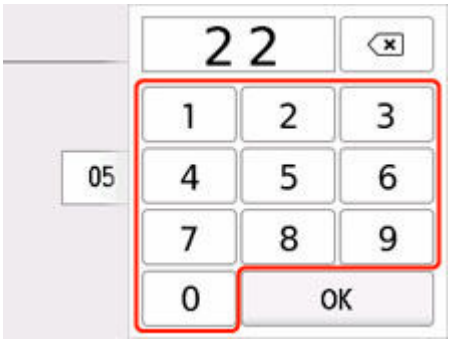

   Enter only the last two digits of the year.

   3. Select **OK**.

   4. Select **OK** again when all settings are completed.

7. Set time.

   1. Select a setting item to change.

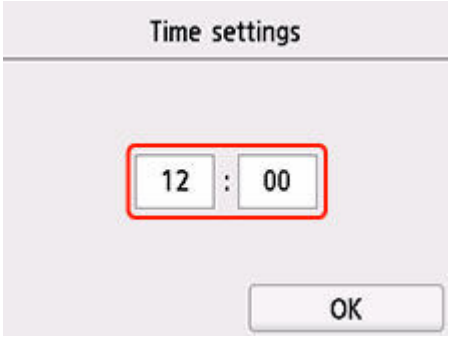

2. Select number to enter.

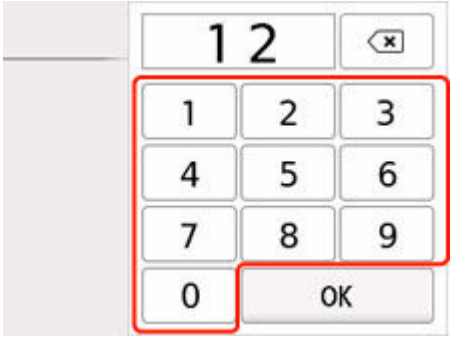

Enter the date and time in 24-hour format.

3. Select **OK**.
4. Select **OK** again when all settings are completed.

Setting Daylight Saving Time (Summer Time)

Some countries adopt the daylight saving time (summer time) system that shifts the clock time forward at certain periods of the year.

You can set your printer to automatically change the time by registering the date and time that daylight saving time (summer time) begins and ends.

Important

- Not all the latest information of all countries or regions is applied for **Daylight saving time setting** by default. You need to change the default setting according to the latest information of your country or region.

Note

- This setting may not be available depending on the country or region.

1. Check that printer is turned on.

2. Select **Setup** on the HOME screen.

➡ Using Touch Screen

3. Select **Printer settings**.

4. Select **Other printer settings**.

5. Select **Daylight saving time setting**.

6. Select **ON**.

   To disable summer time, select **OFF**.

7. Set date and time when summer time starts.

   1. Set date when summer time starts.

      Select a setting item to change, and then specify the setting. Select **OK** again when all settings are completed.

      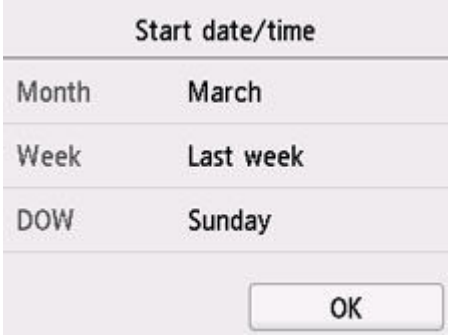

   2. Set time (in 24-hour format) when summer time starts.

      Select a setting item to change, and then specify the setting. Select **OK** again when all settings are completed.

      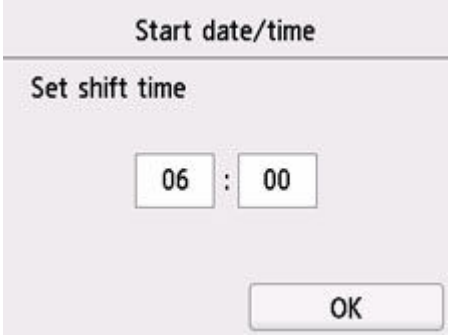

8. Set date and time when summer time ends.

   1. Set date when summer time ends.

      Select a setting item to change, and then specify the setting. Select **OK** again when all settings are completed.

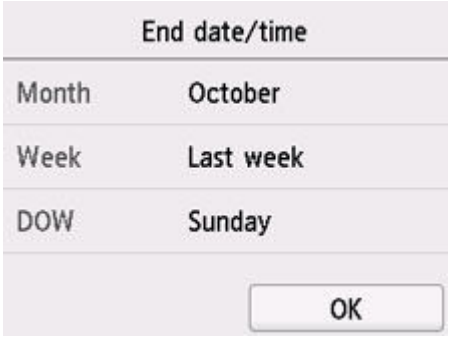

2. Set time (in 24-hour format) when summer time ends.

   Select a setting item to change, and then specify the setting. Select **OK** again when all settings are completed.

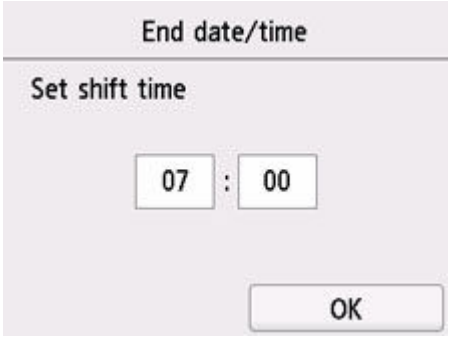

Registering User Information

This section describes the procedure to register the user information.

Note

- Before sending a fax, be sure to enter your name and fax/telephone number in **Unit name** and **Unit TEL** on the **User information settings** screen (for US only).

1. Check that printer is turned on.

2. Select **Setup** on the HOME screen.

   ➡ Using Touch Screen

3. Select **Printer settings**.

4. Select **Fax settings**.

5. Select **Fax user settings**.

6. Select **User information settings**.

   The screen to register the unit name and the unit fax/telephone number is displayed.

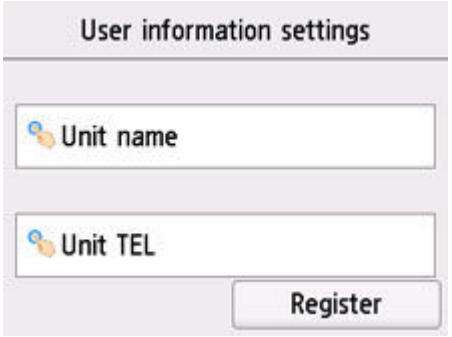

7. Enter unit name.

   1. Select entry field under **Unit name**.

      The screen to enter the character is displayed.

   2. Enter unit name.

   3. Select **OK**.

Note

- You can enter the name up to 24 characters, including spaces.

8. Enter unit fax/telephone number.

   1. Select entry field under **Unit TEL**.

      The screen to enter the number is displayed.

   2. Enter unit fax/telephone number.

   3. Select **OK**.

Note

- You can enter the fax/telephone number up to 20 digits, including spaces.

9. Select **Register** to finalize registration.

Sending Faxes

- Registering Recipients
- Sending Faxes Using Operation Panel of Printer
- Sending Faxes from Computer (Windows)
- Sending Faxes from Computer (macOS)
- Sending Faxes Using Useful Functions

Registering Recipients

- Registering Recipients Using Operation Panel of Printer
- Registering Recipients Using Speed Dial Utility2 (Windows)
- Registering Recipients Using Speed Dial Utility2 (macOS)

Registering Recipients Using Operation Panel of Printer

Registering recipients in the printer's directory in advance allows you to dial fax/telephone numbers simply.

The following methods to register are available:

- Recipient registration

  Registering the recipient's fax/telephone number and name allows you to send a fax by selecting a registered recipient in the printer directory.

  ➡ Registering Fax/Telephone Number of Recipients

- Group dial registration

  You can combine two or more recipients registered in advance into a group. You can send the same document to all the registered recipients in the group.

  ➡ Registering Recipients in Group Dial

You can register up to 100 recipients in total of individual recipients and group dials.

Note

- To change the registered information of the recipient or the group dial, see Changing Registered Information.
- To delete the registered information of the recipient or the group dial, see Deleting Registered Information.
- To print a list of the recipient's fax/telephone numbers and names registered, see Printing List of Registered Destinations.
- You can register, change, or delete the registered information of the recipient or the group dial using Speed Dial Utility on the computer.
  - For Windows:

    ➡ Registering Recipients Using Speed Dial Utility2 (Windows)

  - For macOS:

    ➡ Registering Recipients Using Speed Dial Utility2 (macOS)

Registering Fax/Telephone Number of Recipients

Before you can use the printer's directory, you need to register the recipients' fax/telephone numbers. Follow the procedure below to register the recipients' fax/telephone numbers.

1. Check that printer is turned on.

2. Select **Fax** on the HOME screen.

   ➡ Using Touch Screen

   The Fax standby screen is displayed.

3. Select **Function list**.

   The **Function list** screen is displayed.

4. Select **TEL number registration**.

5. Select **Directory registration**.

   The screen to select an ID number is displayed.

Note

- If you already registered the recipients, the recipients' name is displayed next to the ID number. If you already registered the group dial, the icon and the group name are displayed next to the ID number.

6. Select an unregistered ID number.

Note

- If you already registered the recipients and they are displayed by name, select **Switch view**. The registered recipients are displayed by ID number.
- If you select **New entry**, an unregistered ID number will be selected in numerical order.

7. Select **Add recipient**.

8. Select a registration method.

9. Register recipients' fax/telephone number.

Register the recipients' fax/telephone number depending on the registration method selected.

- **By entering the number**

  The screen to register the recipient's fax/telephone number and name is displayed. Go to next step.

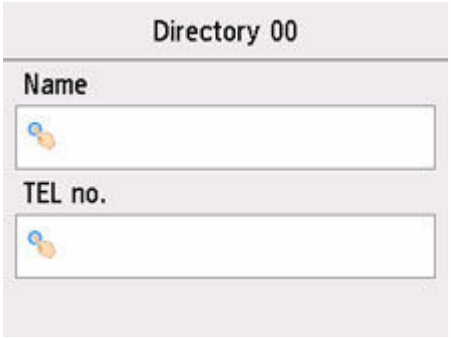

- **From outgoing call log**

  When you select this registration method, the screen to select the fax/telephone number from the outgoing call logs is displayed.

  Selecting a fax/telephone number from the outgoing call logs, the screen to register the recipient's fax/telephone number and name is displayed. Go to next step.

- **From incoming call log**

  When you select this registration method, the screen to select the fax/telephone number or the name from the incoming call logs is displayed.

  Select a fax/telephone number or name from the incoming call logs, the screen to register the recipient's fax/telephone number and name is displayed. Go to next step.

Note

- This registration method may not be available depending on the country or region.

10. Enter recipient's name.

If you select **From incoming call log** as a registration method, the recipient's name may be already entered. If you do not change the name, go to next step.

1. Select entry field of name.

The screen to enter the character is displayed.

2. Enter recipient's name.

3. Select **OK**.

Note

- You can enter the name up to 16 characters, including spaces.

11. Enter recipient's fax/telephone number.

If you select a fax/telephone number on **From outgoing call log** or **From incoming call log**, the fax/telephone number is already entered. If you do not change the fax/telephone number, go to next step.

1. Select entry field of fax/telephone numbers.

   The screen to enter the number is displayed.

2. Enter recipient's fax/telephone number.

3. Select **OK**.

Note

- When **Telephone line type** in **Fax user settings** under **Fax settings** is set to **Rotary pulse**, you can enter a tone ("T") by selecting the Tone key.

12. Select **Register** to finalize registration.

Note

- To register another recipient's number and name, select an unregistered ID number and operate in the same procedure.
- You can check the recipient's numbers and names you have registered by printing RECIPIENT TELEPHONE NUMBER LIST.

➡ Printing List of Registered Destinations

Registering Recipients in Group Dial

If you register two or more registered recipients to a group dial, you can send the same document successively to all recipients registered to the group dial.

1. Check that printer is turned on.

2. Select **Fax** on the HOME screen.

   ➡ Using Touch Screen

   The Fax standby screen is displayed.

3. Select **Function list**.

   The **Function list** screen is displayed.

4. Select **TEL number registration**.

5. Select **Directory registration**.

   The screen to select an ID number is displayed.

Note

- If you already registered the recipients, the recipients' name is displayed next to the ID number. If you already registered the group dial, the icon and the group name are displayed next to the ID number.

6. Select an unregistered ID number.

Note

- If you already registered the recipients and they are displayed by name, select **Switch view**. The registered recipients are displayed by ID number.
- If you select **New entry**, an unregistered ID number will be selected in numerical order.

7. Select **Group dial registration**.

The screen to register the group name and the member of the group is displayed.

8. Enter group name.

1. Select entry field of group name.

The screen to enter the character is displayed.

2. Enter group name.

3. Select **OK**.

Note

- You can enter the name up to 16 characters, including spaces.

9. Register registered recipient as a member of group dial.

1. Select **Add member**.

The printer's directory is displayed.

Display by name

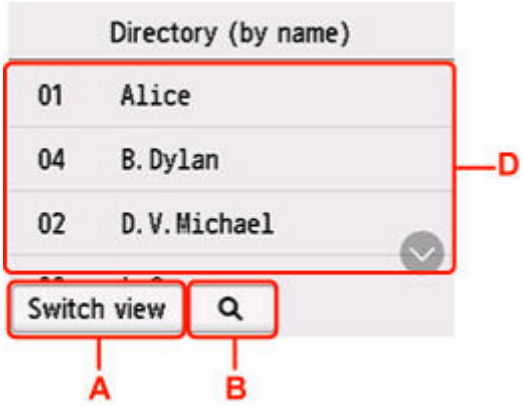

Display by ID number

A: Select to switch the display by name and by ID number.

B: Select to display the screen to select an initial. You can search the registered recipient by initial.

By selecting the initial, the registered recipients are displayed in alphabetical order from the selected character.

C: Select to display the screen to select an ID number of the registered recipient. You can search the registered recipient by ID number.

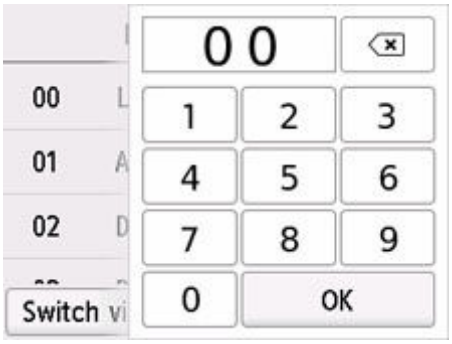

By enter the ID number and selecting **OK**, the registered recipients are displayed in order from the recipient of the ID number selected.

D: The recipients that can be registered are displayed.

2. Select a recipient to register as group member.

The member to register is displayed on the list.

Note

- To delete the recipient from the group dial, select a recipient that you want to delete from the list. After the confirmation screen is displayed, select **Yes** to delete the recipient from the group dial.

3. To add another member, select **Add member** again.

   The printer's directory is displayed.

4. Select a recipient to register as group member.

   The member to register is displayed on the list.

   Repeat the procedure to register another member to the same group dial.

10. Select **Complete** to finalize registration.

Note

- To register another group, select an unregistered ID number and operate in the same procedure.
- You can check the recipients you have registered to the group dial by printing GROUP DIAL TELEPHONE NO. LIST.

  ➡ Printing List of Registered Destinations

Changing Registered Information

To change information registered for recipient and group dial, follow the procedure below.

1. Check that printer is turned on.

2. Select **Fax** on the HOME screen.

   ➡ Using Touch Screen

   The Fax standby screen is displayed.

3. Select **Function list**.

   The **Function list** screen is displayed.

4. Select **TEL number registration**.

5. Select **Directory registration**.

6. Select a recipient or a group dial to change.

7. Change registered information.

   - To change an individual recipient:
     1. Select **Edit recipient**.

        The registered information screen of the selected recipient is displayed.
     2. Select entry field of name or entry field of fax/telephone numbers.

        The each edit screen is displayed.
     3. Change name or fax/telephone numbers.
     4. Select **OK**.

        The touch screen returns to the registered information screen.
     5. Select **Register**.
   - To change a group dial:
     1. Select **Edit group dial**.

        The registered information screen of the group dial is displayed.
     2. To change group name, select entry field of name.

        When edit screen of group name is displayed, change the group name, and then select **OK**.
     3. To add member, select **Add member**.

        When the printer's directory is displayed, select the recipient you want to add.
     4. To delete member, select recipient on list.

When the confirmation screen is displayed, select **Yes** to delete the recipient from the group dial.

5. Select **Complete** to finalize changing.

Deleting Registered Information

To delete information registered for recipient and group dial, follow the procedure below.

1. Check that printer is turned on.

2. Select **Fax** on the HOME screen.

   ➡ Using Touch Screen

   The Fax standby screen is displayed.

3. Select **Function list**.

   The **Function list** screen is displayed.

4. Select **TEL number registration**.

5. Select **Directory registration**.

6. Select a recipient or a group dial to delete.

7. Delete registered information.

   - To delete an individual recipient:
     1. Select **Delete recipient**.
     2. When confirmation screen is displayed, select **Yes** to delete.
   - To delete a group dial:
     1. Select **Delete group dial**.
     2. When confirmation screen is displayed, select **Yes** to delete.

Printing List of Registered Destinations

You can print a list of the fax/telephone numbers and can keep it near the printer to refer to when dialing.

1. Check that printer is turned on.

2. Load paper.

3. Select **Fax** on the HOME screen.

   ➡ Using Touch Screen

   The Fax standby screen is displayed.

4. Select **Function list**.

   The **Function list** screen is displayed.

5. Select **Print reports/lists**.

6. Select **Directory list**.

7. Select an item to print.

   - If you selected **Recipient**:

     The confirmation screen asking if you print the list alphabetically by name is displayed.

     If you select **Yes**: Prints RECIPIENT TELEPHONE NUMBER LIST in alphabetical order.

     If you select **No**: Prints RECIPIENT TELEPHONE NUMBER LIST in the order of the ID number.

   - If you selected **Group dial**:

     The printing confirmation screen is displayed. Select **Yes** to print GROUP DIAL TELEPHONE NO. LIST.

Registering Recipients Using Speed Dial Utility2 (Windows)

About Speed Dial Utility2

Speed Dial Utility2 is a utility for forwarding the telephone directory registered on the printer to a computer and registering/changing it on the computer. In addition, you can register the telephone directory edited on the computer to the printer. You can also save them on the computer as a backup.

For safety reasons, it is recommended that you backup the registered data on the computer using Speed Dial Utility2.

- Starting Up Speed Dial Utility2
- Speed Dial Utility2 Dialog box
- Saving Registered Telephone Directory on Printer to Your Computer
- Registering a Fax/telephone Number Using Speed Dial Utility2
- Changing a Fax/telephone Number Using Speed Dial Utility2
- Deleting a Fax/telephone Number Using Speed Dial Utility2
- Changing Sender Information Using Speed Dial Utility2
- Registering/Changing Rejected Number Using Speed Dial Utility2
- Registering Telephone Directory Has been Saved on Your Computer to Printer

Starting Up Speed Dial Utility2

Important

- Before starting up Speed Dial Utility2, make sure that the printer is connected to the computer correctly.
- Do not plug in or unplug any cables while the printer is in operation, or when the computer is in sleep or standby mode.
- If your printer is compatible with LAN connection, make sure that the printer is connected to the computer with LAN connection to use Speed Dial Utility2 via LAN connection.
- The password entry screen may appear during startup or operation. If it appears, enter the administrator password, and then click **OK**. If you do not know the administrator password, contact the administrator of the printer.

Follow the procedure below to start up Speed Dial Utility2.

1. Make sure printer is turned on.

2. Start up Speed Dial Utility2.

   - For Windows 11 or Windows 10, click **Start** button and select **All apps**, **Canon Utilities**, and then **Speed Dial Utility2**.
   - For Windows 8.1 or Windows 8, select **Speed Dial Utility2** on the **Start** screen to start Speed Dial Utility2. If **Speed Dial Utility2** is not displayed on the **Start** screen, select the **Search** charm, and then search for "Speed Dial Utility2".
   - For Windows 7 or Windows Vista, click **Start** and select **All programs**, **Canon Utilities**, **Speed Dial Utility2**, and then **Speed Dial Utility2**.

   Speed Dial Utility2 starts up.

Note

- You can also start up Speed Dial Utility2 from Quick Utility Toolbox.

Speed Dial Utility2 Dialog box

The following items are on the **Speed Dial Utility2** dialog box.

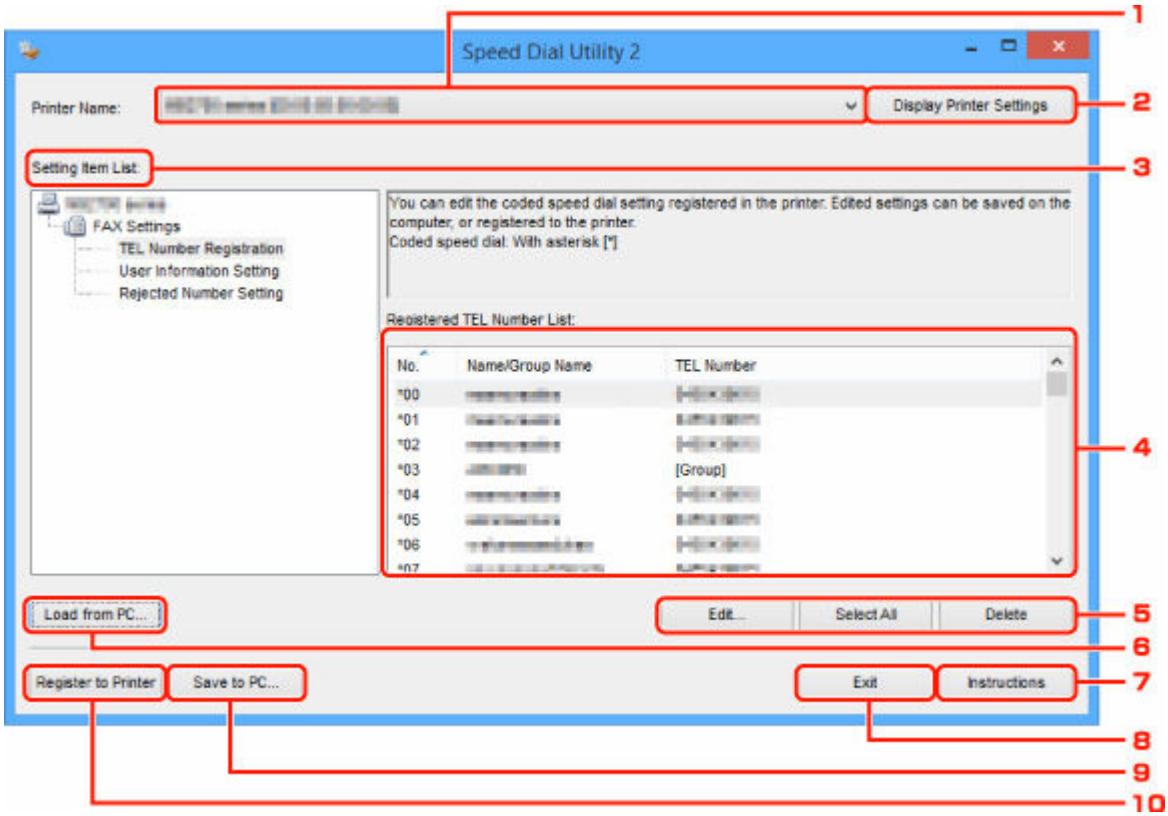

1. **Printer Name:**

   Selects the printer for editing the telephone directory using Speed Dial Utility2.

   Behind printer name, printer's MAC address is displayed.

   Note

   - For checking printer's MAC address, refer to "Checking Network Information" for your model from Home of the Online Manual.
   - For printer that supports both wireless LAN connection and wired LAN connection, MAC address of wired LAN connection is displayed regardless of the connection method.

2. **Display Printer Settings**

   Loads the telephone directory registered on the printer that selected for **Printer Name:** into Speed Dial Utility2.

3. **Setting Item List:**

   Selects a setting item for editing. Choose one item from **TEL Number Registration**, **User Information Setting**, and **Rejected Number Setting**.

4. Registered information list

   Displays the registered information selected for **Setting Item List:**.

Note

- By clicking on the item name, you can sort the display order.

5. **Edit.../Select All/Delete**

   Edits the item that selected for **Setting Item List:**, or deletes the item, or selects all the items.

   When multiple items on the registered information list are selected, you cannot use the **Edit...** button.

6. **Load from PC...**

   Displays the telephone directory saved on the computer.

7. **Instructions**

   Displays this guide.

8. **Exit**

   Quits Speed Dial Utility2. Information registered or edited using Speed Dial Utility2 is neither saved on the computer nor registered on the printer.

9. **Save to PC...**

   Saves the telephone directory edited using Speed Dial Utility2 on the computer.

10. **Register to Printer**

    Registers the telephone directory edited using Speed Dial Utility2 to the printer.

Saving Registered Telephone Directory on Printer to Your Computer

Follow the procedure below to save the telephone directory (includes recipients' name, recipients' fax/telephone number, group dial, user's name, user's fax/telephone number, and rejected numbers) that registered on the printer to the computer.

1. Start up Speed Dial Utility2.
2. Select a printer from **Printer Name:** list box, and then click **Display Printer Settings**.
3. Click **Save to PC...**.
4. Enter file name on displayed screen, and then click **Save**.

Note

- The data of the telephone directory (RSD file, *.rsd) can be imported to other printer.

➡ Registering Telephone Directory Has been Saved on Your Computer to Printer

Registering a Fax/telephone Number Using Speed Dial Utility2

Follow the procedure below to register fax/telephone numbers.

Note

Before you register fax/telephone numbers using Speed Dial Utility2, make sure that no fax operations are in progress.

1. Start up Speed Dial Utility2.

2. Select a printer from **Printer Name:** list box, and then click **Display Printer Settings**.

3. Click **TEL Number Registration** from **Setting Item List:**.

   The list of registered fax/telephone numbers is displayed.

4. Select an unoccupied code from list, and then click **Edit...**.

   The **Individual or Group Selection** dialog box is displayed.

5. Click **Register individual TEL number** or **Register group dial**, and then click **Next...**.

   - If **Register individual TEL number** is selected:

     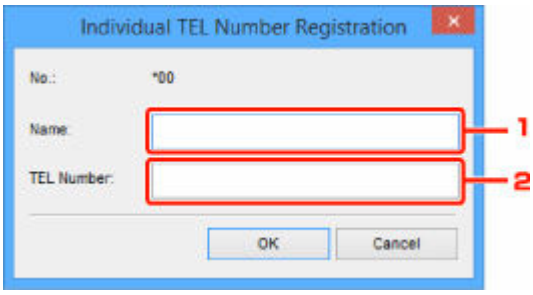

     1. Enter name.
     2. Enter fax/telephone number.

   - If **Register group dial** is selected:

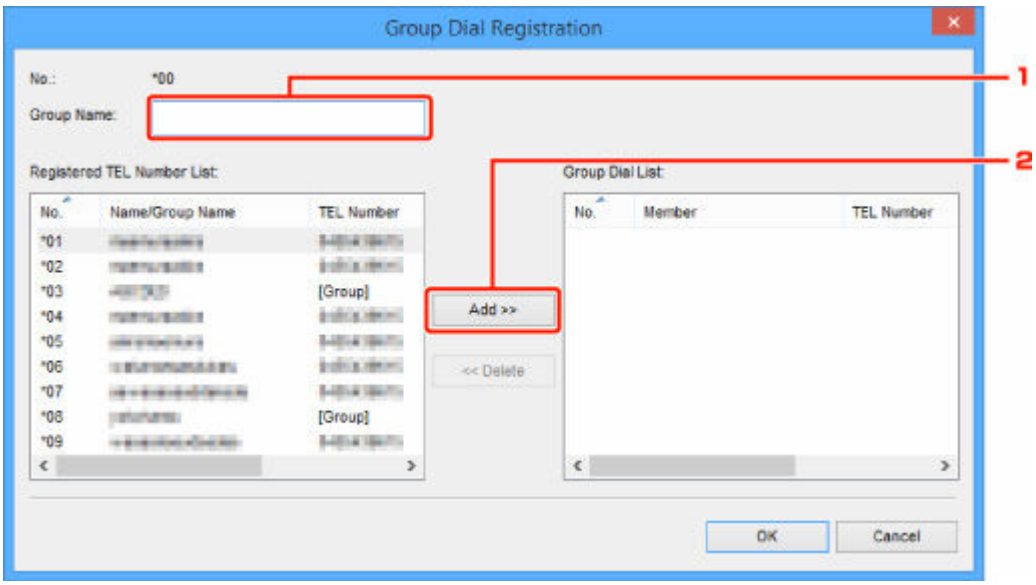

1. Enter group name.
2. Select a code you want to add to group dial, and then click **Add >>**.

Note

- You can only add the numbers that have already been registered.

6. Click **OK**.

To continue registering fax/telephone numbers or a group dial, repeat steps 4 to 6.

- To save the registered information on the computer.
  1. Click **Save to PC...**.
  2. Enter file name on displayed screen, and then click **Save**.
- To register the registered information to the printer:
  1. Click **Register to Printer**.
  2. When message appears, check it and click **OK**.

     The information is registered to the printer.

Changing a Fax/telephone Number Using Speed Dial Utility2

Follow the procedure below to change fax/telephone numbers.

Note

- Before you change fax/telephone numbers using Speed Dial Utility2, make sure that no fax operations are in progress.

1. Start up Speed Dial Utility2.

2. Select a printer from **Printer Name:** list box, and then click **Display Printer Settings**.

3. Click **TEL Number Registration** from **Setting Item List:**.

   The list of registered fax/telephone numbers is displayed.

4. Select a code to change from list, and then click **Edit...**.

   - If an individual fax/telephone number is selected:

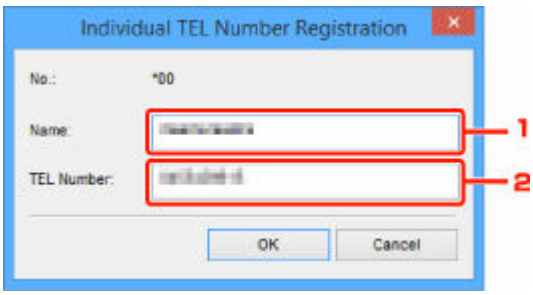

     1. Enter a new name.
     2. Enter a new fax/telephone number.

   - If a group dial is selected:

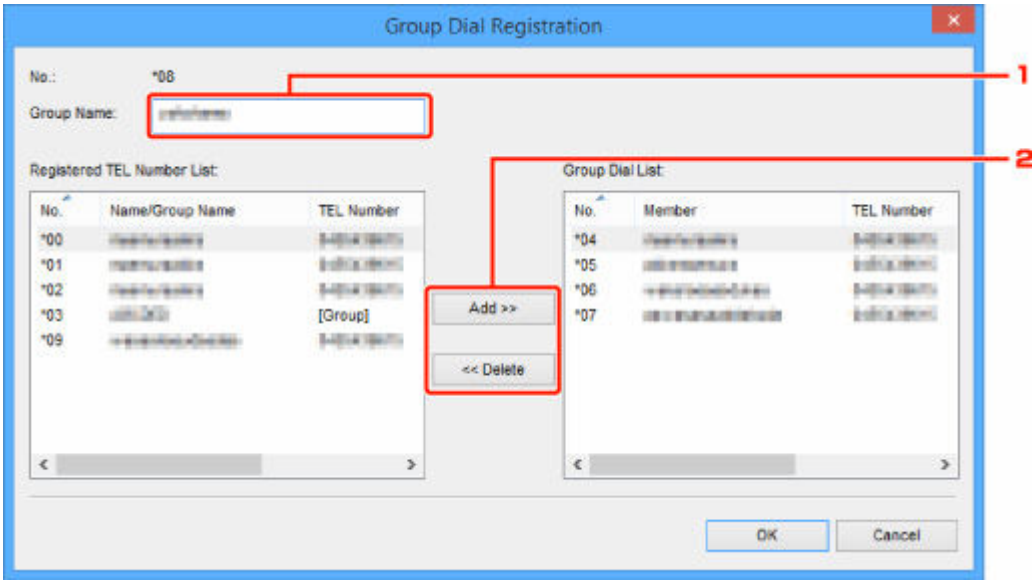

     1. Enter a new group name.

2. Add or delete a member to/from group dial.

   To add a member:

   Select a code to add to group dial, and then click **Add >>**.

   To delete a member:

   Select a code to delete from group dial, and then click **<< Delete**.

5. Click **OK**.

To continue changing fax/telephone numbers or group dials, repeat steps 4 and 5.

- To save the edited information on the computer.
  1. Click **Save to PC...**.
  2. Enter file name on displayed screen, and then click **Save**.
- To register the edited information to the printer:
  1. Click **Register to Printer**.
  2. When message appears, check it and click **OK**.

     The information is registered to the printer.

Deleting a Fax/telephone Number Using Speed Dial Utility2

Follow the procedure below to delete fax/telephone numbers.

Note

- Before you delete fax/telephone numbers using Speed Dial Utility2, make sure that no fax operations are in progress.

1. Start up Speed Dial Utility2.

2. Select a printer from **Printer Name:** list box, and then click **Display Printer Settings**.

3. Click **TEL Number Registration** from **Setting Item List:**.

   The list of registered fax/telephone numbers is displayed.

4. Select a code to delete from list, and then click **Delete**.

   Note

   - To delete all fax/telephone numbers on the list, click **Select All**, and then **Delete**.

5. When confirmation screen appears, click **OK**.

   The selected fax/telephone number is deleted.

   To continue deleting fax/telephone numbers, repeat steps 4 and 5.

   - To save the edited information on the computer.
     1. Click **Save to PC...**.
     2. Enter file name on the displayed screen, and then click **Save**.
   - To register the edited information to the printer:
     1. Click **Register to Printer**.
     2. When message appears, check it and click **OK**.

        The information is registered to the printer.

Changing Sender Information Using Speed Dial Utility2

Follow the procedure below to change the user's name or fax/telephone number.

1. Start up Speed Dial Utility2.

2. Select a printer from **Printer Name:** list box, and then click **Display Printer Settings**.

3. Click **User Information Setting** from **Setting Item List:**.

   The user's information is displayed.

4. Select an item to change, and then click **Edit...**.

   The **User Information** dialog box is displayed.

5. Enter new user's name on **User Name** and new fax/telephone number in **TEL Number**, and then click **OK**.

   - To save the edited information on the computer:
     1. Click **Save to PC...**.
     2. Enter file name on displayed screen, and then click **Save**.
   - To register the edited information to the printer:
     1. Click **Register to Printer**.
     2. When message appears, check it and click **OK**.

        The information is registered to the printer.

Registering/Changing Rejected Number Using Speed Dial Utility2

Follow the procedure below to register, change, or delete rejected numbers.

1. Start up Speed Dial Utility2.

2. Select a printer from **Printer Name:** list box, and then click **Display Printer Settings**.

3. Click **Rejected Number Setting** from **Setting Item List:**.

   The list of rejected numbers is displayed.

   - To register a rejected number:
     1. Select an unoccupied code from list, and then click **Edit...**.
     2. Enter fax/telephone number in **Rejected Number** dialog box, and then click **OK**.
   - To change a rejected number:
     1. Select a code to change from list, and then click **Edit...**.
     2. Enter fax/telephone number in **Rejected Number** dialog box, and then click **OK**.
   - To delete a rejected number:
     1. Select a code to delete from list, and then click **Delete**.

        The selected fax/telephone number is deleted.

        Note

        - To delete all fax/telephone numbers on the list, click **Select All**, and then **Delete**.

Registering Telephone Directory Has been Saved on Your Computer to Printer

You can load the data of the telephone directory (RSD file, *.rsd) and register it to your printer.

The data of the telephone directory (RSD file, *.rsd) that is exported from other printer can be loaded and registered to your printer.

Note

- In Speed Dial Utility2, the data of the telephone directory (RSD file, *.rsd) that is exported using Speed Dial Utility can be loaded.

1. Start up Speed Dial Utility2.
2. Select a printer from **Printer Name:** list box, and then click **Display Printer Settings**.
3. Click **Load from PC...**.
4. Select a data of telephone directory (RSD file, *.rsd) to register to your printer.
5. Click **Open** on dialog box.

   The selected telephone directory is displayed.

   Note

   - If you select the data of the telephone directory (RSD file, *.rsd) that is exported from other printer, the confirmation message appears. Click **OK**.

6. Click **Register to Printer**.

   The telephone directory that has been saved on the computer is registered to your printer.

Registering Recipients Using Speed Dial Utility2 (macOS)

About Speed Dial Utility2

Speed Dial Utility2 is a utility for forwarding the telephone directory registered on the printer to a computer and registering/changing it on the computer. In addition, you can register the telephone directory edited on the computer to the printer. You can also save them on the computer as a backup.

For safety reasons, it is recommended that you backup the registered data on the computer using Speed Dial Utility2.

- Starting Up Speed Dial Utility2
- Speed Dial Utility2 Dialog
- Saving Registered Telephone Directory on Printer to Your Computer
- Registering a Fax/telephone Number Using Speed Dial Utility2
- Changing a Fax/telephone Number Using Speed Dial Utility2
- Deleting a Fax/telephone Number Using Speed Dial Utility2
- Changing Sender Information Using Speed Dial Utility2
- Registering/Changing Rejected Number Using Speed Dial Utility2
- Registering Telephone Directory Has been Saved on Your Computer to Printer

Starting Up Speed Dial Utility2

Important

- Before starting up Speed Dial Utility2, make sure that the printer is connected to the computer correctly.
- Do not plug in or unplug any cables while the printer is in operation, or when the computer is in sleep or standby mode.
- If your printer is compatible with LAN connection, make sure that the printer is connected to the computer with LAN connection to use Speed Dial Utility2 via LAN connection.
- The password entry screen may appear during startup or operation. If it appears, enter the administrator password, and then click **OK**. If you do not know the administrator password, contact the administrator of the printer.

Follow the procedure below to start up Speed Dial Utility2.

1. Select **Applications** on **Go** menu of Finder.
2. Double-click **Canon Utilities** folder.
3. Double-click **Speed Dial Utility2** folder.
4. Double-click **Speed Dial Utility2**.

   Speed Dial Utility2 starts up.

Note

- You can also start up Speed Dial Utility2 from Quick Utility Toolbox.

Speed Dial Utility2 Dialog

The following items are on the **Speed Dial Utility2** dialog.

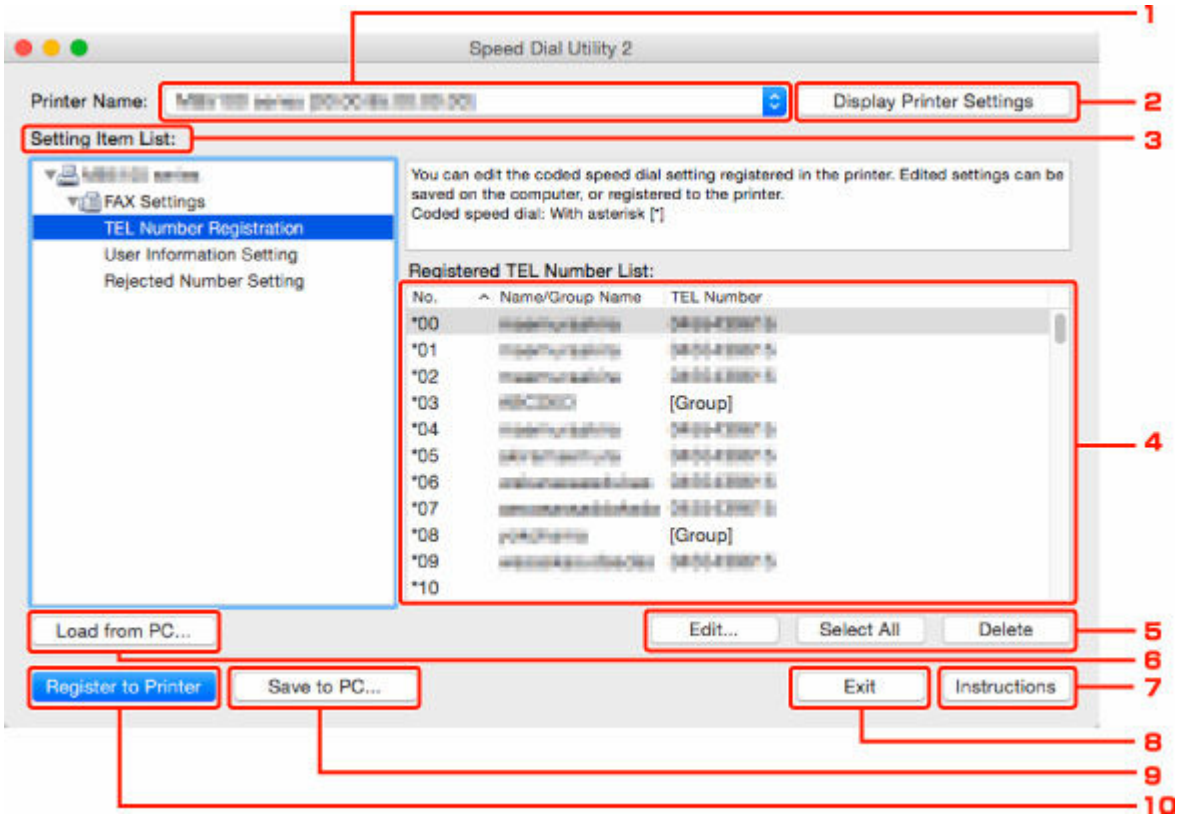

1. **Printer Name:**

   Selects the printer for editing the telephone directory using Speed Dial Utility2.

   Behind printer name, printer's MAC address is displayed.

   Note

   - For checking printer's MAC address, refer to "Checking Network Information" for your model from Home of the Online Manual.
   - For printer that supports both wireless LAN connection and wired LAN connection, MAC address of wired LAN connection is displayed regardless of the connection method.

2. **Display Printer Settings**

   Loads the telephone directory registered on the printer that selected for **Printer Name:** into Speed Dial Utility2.

3. **Setting Item List:**

   Selects a setting item for editing. Choose one item from **TEL Number Registration**, **User Information Setting**, and **Rejected Number Setting**.

4. Registered information list

   Displays the registered information selected for **Setting Item List:**.

Note

- By clicking on the item name, you can sort the display order.

5. **Edit.../Select All/Delete**

   Edits the item that selected for **Setting Item List:**, or deletes the item, or selects all the items.

   When multiple items on the registered information list are selected, you cannot use the **Edit...** button.

6. **Load from PC...**

   Displays the telephone directory saved on the computer.

7. **Instructions**

   Displays this guide.

8. **Exit**

   Quits Speed Dial Utility2. Information registered or edited using Speed Dial Utility2 is neither saved on the computer nor registered on the printer.

9. **Save to PC...**

   Saves the telephone directory edited using Speed Dial Utility2 on the computer.

10. **Register to Printer**

    Registers the telephone directory edited using Speed Dial Utility2 to the printer.

Saving Registered Telephone Directory on Printer to Your Computer

Follow the procedure below to save the telephone directory (includes recipients' name, recipients' fax/telephone number, group dial, user's name, user's fax/telephone number, and rejected numbers) that registered on the printer to the computer.

1. Start up Speed Dial Utility2.
2. Select a printer from **Printer Name:** list box, and then click **Display Printer Settings**.
3. Click **Save to PC...**.
4. Enter file name on displayed screen, and then click **Save**.

Note

- The data of the telephone directory (RSD file, *.rsd) can be imported to other printer.

➡ Registering Telephone Directory Has been Saved on Your Computer to Printer

Registering a Fax/telephone Number Using Speed Dial Utility2

Follow the procedure below to register fax/telephone numbers.

Note

Before you register fax/telephone numbers using Speed Dial Utility2, make sure that no fax operations are in progress.

1. Start up Speed Dial Utility2.

2. Select a printer from **Printer Name:** list box, and then click **Display Printer Settings**.

3. Click **TEL Number Registration** from **Setting Item List:**.

   The list of registered fax/telephone numbers is displayed.

4. Select an unoccupied code from list, and then click **Edit...**.

   The **Individual or Group Selection** dialog is displayed.

5. Click **Register individual TEL number** or **Register group dial**, and then click **Next...**.

   - If **Register individual TEL number** is selected:

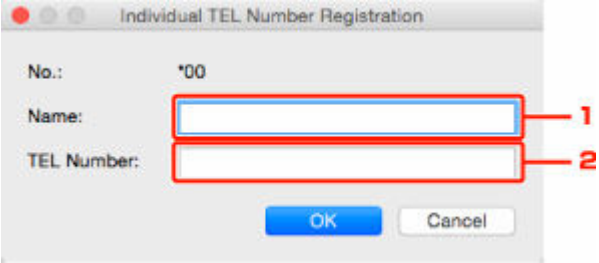

     1. Enter name.
     2. Enter fax/telephone number.

   - If **Register group dial** is selected:

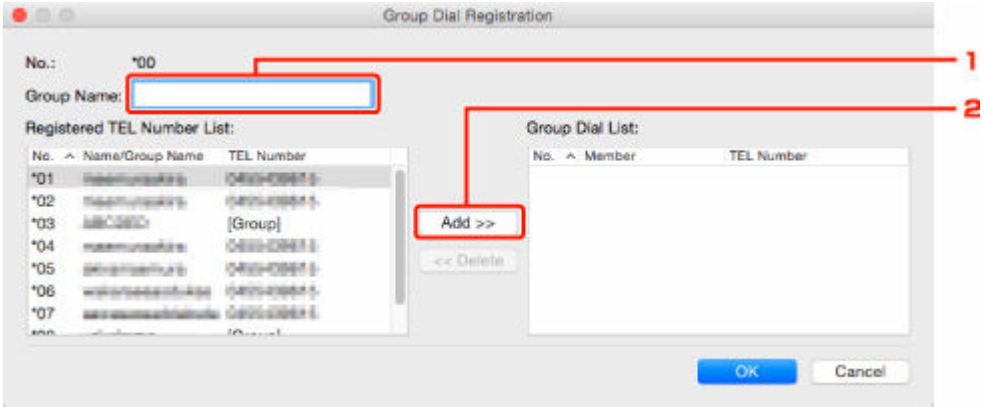

     1. Enter group name.
     2. Select a code you want to add to group dial, and then click **Add >>**.

Note

- You can only add the numbers that have already been registered.

6. Click **OK**.

To continue registering fax/telephone numbers or a group dial, repeat steps 4 to 6.

- To save the registered information on the computer.
  1. Click **Save to PC...**.
  2. Enter file name on displayed screen, and then click **Save**.
- To register the registered information to the printer:
  1. Click **Register to Printer**.
  2. When message appears, check it and click **OK**.

     The information is registered to the printer.

Changing a Fax/telephone Number Using Speed Dial Utility2

Follow the procedure below to change fax/telephone numbers.

Note

- Before you change fax/telephone numbers using Speed Dial Utility2, make sure that no fax operations are in progress.

1. Start up Speed Dial Utility2.

2. Select a printer from **Printer Name:** list box, and then click **Display Printer Settings**.

3. Click **TEL Number Registration** from **Setting Item List:**.

   The list of registered fax/telephone numbers is displayed.

4. Select a code to change from list, and then click **Edit...**.

   - If an individual fax/telephone number is selected:

     1. Enter a new name.
     2. Enter a new fax/telephone number.

   - If a group dial is selected:

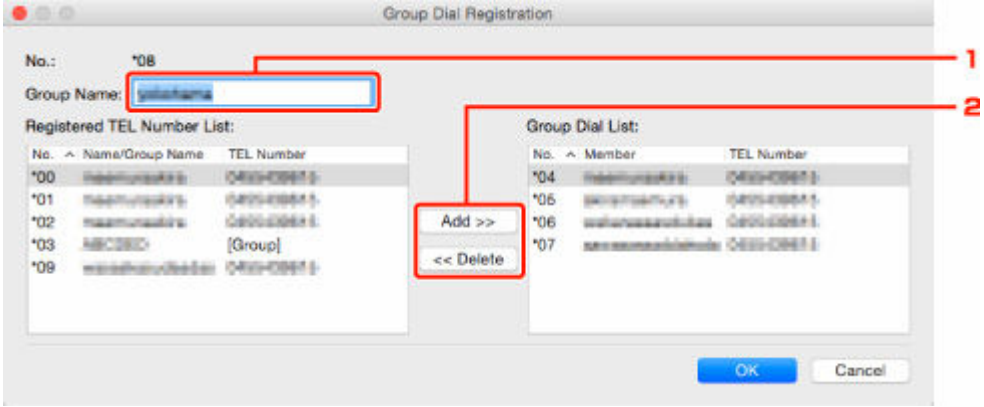

     1. Enter a new group name.
     2. Add or delete a member to/from group dial.

        To add a member:

        Select a code to add to group dial, and then click **Add >>**.

        To delete a member:

        Select a code to delete from group dial, and then click **<< Delete**.

5. Click **OK**.

To continue changing fax/telephone numbers or group dials, repeat steps 4 and 5.

- To save the edited information on the computer.
  1. Click **Save to PC...**.
  2. Enter file name on displayed screen, and then click **Save**.
- To register the edited information to the printer:
  1. Click **Register to Printer**.
  2. When message appears, check it and click **OK**.

     The information is registered to the printer.

Deleting a Fax/telephone Number Using Speed Dial Utility2

Follow the procedure below to delete fax/telephone numbers.

Note

- Before you delete fax/telephone numbers using Speed Dial Utility2, make sure that no fax operations are in progress.

1. Start up Speed Dial Utility2.

2. Select a printer from **Printer Name:** list box, and then click **Display Printer Settings**.

3. Click **TEL Number Registration** from **Setting Item List:**.

   The list of registered fax/telephone numbers is displayed.

4. Select a code to delete from list, and then click **Delete**.

   Note

   - To delete all fax/telephone numbers on the list, click **Select All**, and then **Delete**.

5. When confirmation screen appears, click **OK**.

   The selected fax/telephone number is deleted.

   To continue deleting fax/telephone numbers, repeat steps 4 and 5.

   - To save the edited information on the computer.
     1. Click **Save to PC...**.
     2. Enter file name on the displayed screen, and then click **Save**.
   - To register the edited information to the printer:
     1. Click **Register to Printer**.
     2. When message appears, check it and click **OK**.

        The information is registered to the printer.

Changing Sender Information Using Speed Dial Utility2

Follow the procedure below to change the user's name or fax/telephone number.

1. Start up Speed Dial Utility2.

2. Select a printer from **Printer Name:** list box, and then click **Display Printer Settings**.

3. Click **User Information Setting** from **Setting Item List:**.

   The user's information is displayed.

4. Select an item to change, and then click **Edit...**.

   The **User Information** dialog is displayed.

5. Enter new user's name on **User Name** and new fax/telephone number in **TEL Number**, and then click **OK**.

   - To save the edited information on the computer:
     1. Click **Save to PC...**.
     2. Enter file name on displayed screen, and then click **Save**.
   - To register the edited information to the printer:
     1. Click **Register to Printer**.
     2. When message appears, check it and click **OK**.

        The information is registered to the printer.

Registering/Changing Rejected Number Using Speed Dial Utility2

Follow the procedure below to register, change, or delete rejected numbers.

1. Start up Speed Dial Utility2.

2. Select a printer from **Printer Name:** list box, and then click **Display Printer Settings**.

3. Click **Rejected Number Setting** from **Setting Item List:**.

   The list of rejected numbers is displayed.

   - To register a rejected number:
     1. Select an unoccupied code from list, and then click **Edit...**.
     2. Enter fax/telephone number in **Rejected Number** dialog, and then click **OK**.
   - To change a rejected number:
     1. Select a code to change from list, and then click **Edit...**.
     2. Enter fax/telephone number in **Rejected Number** dialog, and then click **OK**.
   - To delete a rejected number:
     1. Select a code to delete from list, and then click **Delete**.

        The selected fax/telephone number is deleted.

        Note

        - To delete all fax/telephone numbers on the list, click **Select All**, and then **Delete**.

Registering Telephone Directory Has been Saved on Your Computer to Printer

You can load the data of the telephone directory (RSD file, *.rsd) and register it to your printer.

The data of the telephone directory (RSD file, *.rsd) that is exported from other printer can be loaded and registered to your printer.

Note

- In Speed Dial Utility2, the data of the telephone directory (RSD file, *.rsd) that is exported using Speed Dial Utility can be loaded.

1. Start up Speed Dial Utility2.
2. Select a printer from **Printer Name:** list box, and then click **Display Printer Settings**.
3. Click **Load from PC...**.
4. Select a data of telephone directory (RSD file, *.rsd) to register to your printer.
5. Click **Open** on dialog.

   The selected telephone directory is displayed.

   Note

   - If you select the data of the telephone directory (RSD file, *.rsd) that is exported from other printer, the confirmation message appears. Click **OK**.

6. Click **Register to Printer**.

   The telephone directory that has been saved on the computer is registered to your printer.

Sending Faxes Using Operation Panel of Printer

- Sending Faxes by Entering Fax/Telephone Number Basic
- Resending Faxes (Redialing Busy Number)
- Setting Items for Sending Faxes

Sending Faxes by Entering Fax/Telephone Number

This section describes dialing and sending faxes directly by entering the fax/telephone numbers.

Important

- It may be possible that faxes will reach unintended recipients due to the misdialing or incorrect registration of fax/telephone numbers. When you send important documents, we recommend that you send them after speaking on the telephone.

  ➡ Sending Fax after Speaking on Telephone

1. Check that printer is turned on.

2. Load original on platen or in ADF (Auto Document Feeder).

3. Select **Fax** on the HOME screen.

   ➡ Using Touch Screen

   The Fax standby screen is displayed.

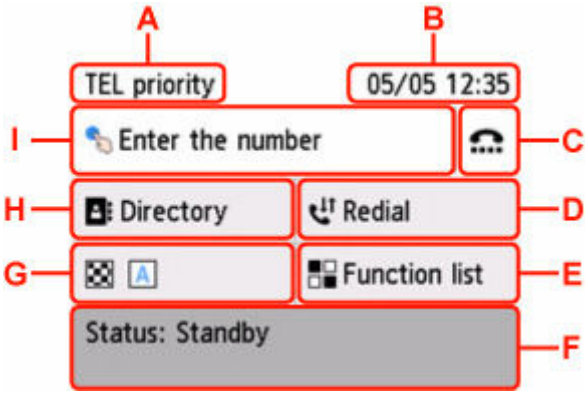

   A: The receive mode selected currently is displayed.

   B: The date and time are displayed.

   C: Select to send faxes with the on hook dial function.

   ➡ Using On Hook Dial Function

   D: Select to send faxes with redialing.

   ➡ Resending Faxes (Redialing Busy Number)

   E: You can use the each fax function and change the setting for the fax.

   F: The current state is displayed.

   G: You can change the settings for sending a fax.

   ➡ Setting Items for Sending Faxes

   H: You can select a registered fax/telephone number.

   ➡ Sending Fax to Registered Recipient

I: Select to display the screen to enter the fax/telephone numbers.

Note

- If you have not set up the printer for sending/receiving faxes yet, the message for setup is displayed on the touch screen when you select **Fax** on the HOME screen for the first time. When you set up for faxing, follow the procedure according to the instructions on the touch screen.

4. Dial recipient's fax/telephone number.

1. Select entry field of fax/telephone numbers.

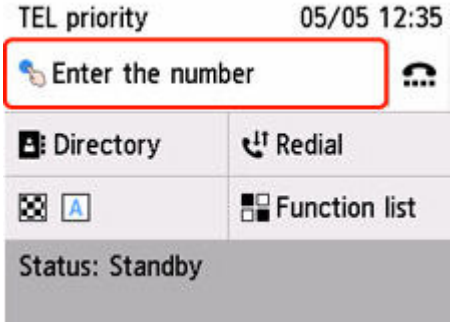

2. Enter fax/telephone number.

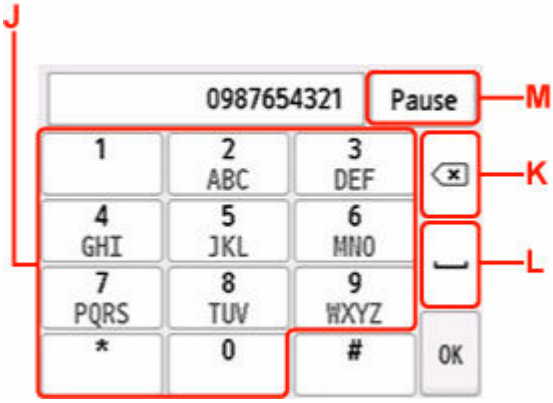

J: Enters the number.

K: Deletes the entered number.

L: Enters a blank space.

M: Enters a pause "P".

3. Select **OK**.

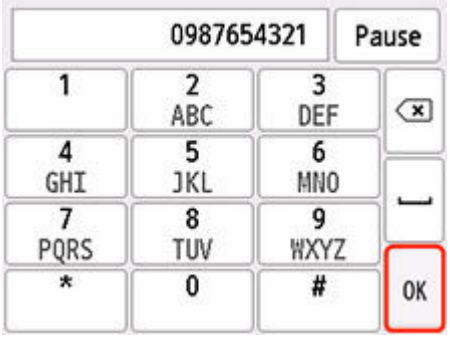

The touch screen returns to the Fax standby screen.

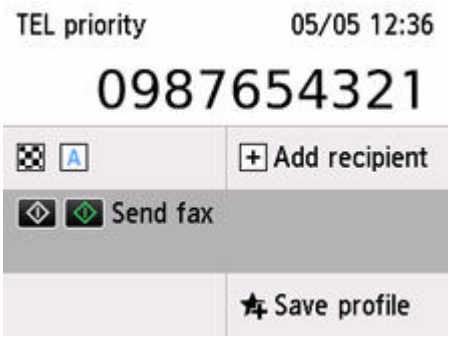

Note

- Select **Save profile** to register the current settings as a custom menu.

  ➡ Registering Favorite Settings (My Presets)

5. Press the **Black** button or the **Color** button.

The printer starts scanning the document.

Important

- Color transmission is available only when the recipient's fax device supports color faxing.
- Do not open the document cover until scanning is completed.

6. Start sending.

- **If you load the document in the ADF:**

  The printer scans the document automatically and starts sending the fax.

  Note

  - If documents remain in the ADF after the **Stop** button is pressed while scanning is in progress, **Originals in ADF. Remove any originals from the document tray and tap [OK].** is displayed on the touch screen. By selecting **OK**, the remaining documents are automatically ejected.

- **If you load the document on the platen:**

  After scanning the document, the confirmation screen asking you if you load the next document is displayed.

  To send the scanned document, select **Send now** to start sending it.

  To send two or more pages, follow the message to load the next page, and select **Scan**. After scanning all pages, select **Send now** to start sending.

Note

- When your printer is connected to a PBX (Private Branch Exchange) system, refer to the operating instructions of the system for details on dialing the recipient's fax/telephone number.
- In case the printer was not able to send a fax, such as when the recipient's line was busy, it has the function to automatically redial the number after a specified interval. Automatic redialing is enabled by default.

➡ Resending Faxes (Redialing Busy Number)

- Unsent documents, such as those pending redial, are stored in the printer's memory. They are not stored in the case of a sending error.

  ➡ Document Stored in Printer's Memory

- Do not unplug the power cord until all documents are sent.

Resending Faxes (Redialing Busy Number)

There are two methods of redialing: Automatic redialing and Manual redialing.

- **Automatic Redialing**

  If you send a document and the recipient's line is busy, the printer will redial the number after a specified interval.

  Enable and specify the automatic redialing setting on **Auto redial** in **Advanced fax settings** under **Fax settings**.

  ➡ Advanced fax settings

  Note

  - To cancel automatic redialing, delete the unsent fax from the printer's memory while the printer is on-standby for a redial operation. For details, see Deleting Document in Printer's Memory.

- **Manual Redialing**

  You can redial to the recipients dialed by entering the fax/telephone numbers.

  ➡ Manual Redialing

Important

- It may be possible that faxes will reach unintended recipients due to the misdialing or incorrect registration of fax/telephone numbers. When you send important documents, we recommend that you send them after speaking on the telephone.

  ➡ Sending Fax after Speaking on Telephone

Note

- Automatic redialing is enabled by default.
- For details on the basic sending operations:

  ➡ Sending Faxes by Entering Fax/Telephone Number

Manual Redialing

Follow the procedure below for manual redialing.

1. Check that printer is turned on.

2. Load original on platen or in ADF (Auto Document Feeder).

3. Select **Fax** on the HOME screen.

   ➡ Using Touch Screen

   The Fax standby screen is displayed.

4. Change send settings as necessary.

   ➡ Setting Items for Sending Faxes

5. Select **Redial**.

   The **Redial** screen is displayed.

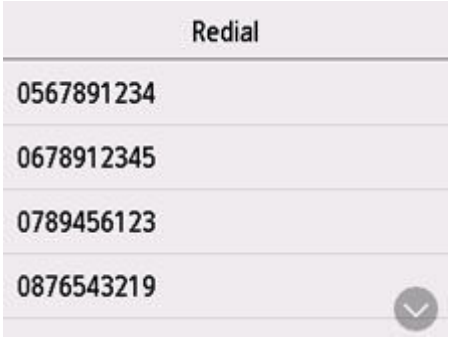

6. Select a recipient's number to redial.

7. Press the **Black** button or the **Color** button.

Important

- Color transmission is available only when the recipient's fax device supports color faxing.

Note

- For manual redialing, the printer memorizes up to 10 recent recipients dialed by entering the fax/telephone numbers. Note that the printer does not memorize any recipients dialed using the redial function or selecting from the directory.
- If documents remain in the ADF after the **Stop** button is pressed while scanning is in progress, **Originals in ADF. Remove any originals from the document tray and tap [OK].** is displayed on the touch screen. By selecting **OK**, the remaining documents are automatically ejected.

Setting Items for Sending Faxes

You can change the send settings such as the scan contrast or the scan resolution on the Fax standby screen.

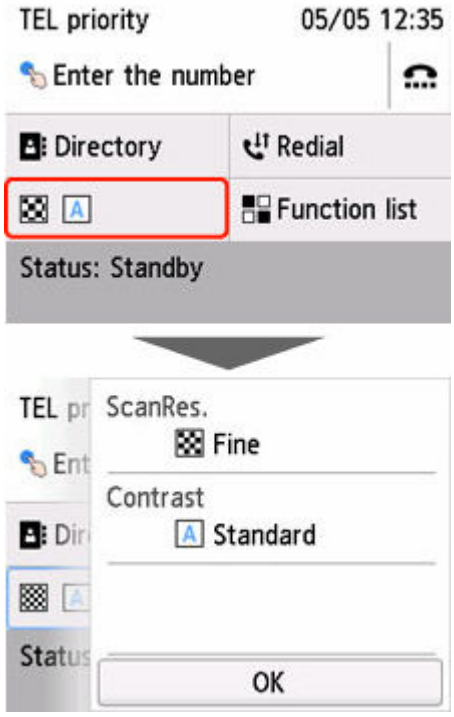

Select to change the send settings.

- **ScanRes.**

  The following settings of the scan resolution are selectable.

  Standard

  Suitable for text-only documents.

  Fine

  Suitable for fine-print documents.

  Extra fine

  Suitable for detailed illustration or fine-print quality documents.

  If the recipient's fax device is not compatible with **Extra fine** (300 x 300 dpi), the fax will be sent in the **Standard** or **Fine** resolution.

  Photo

  Suitable for photographs.

  Note

  - When sending a color fax, documents are always scanned in the same resolution (200 x 200 dpi). The image quality (compression rate) is determined by which scan resolution is selected, except that **Extra fine** and **Photo** provide the same image quality.

- **Contrast**

  Select a setting of the scan contrast from **Lower**, **Standard**, and **Higher**.

The touch screen returns to the Fax standby screen when you finish specifying the setting and selecting **OK**.

Sending Faxes from Computer (Windows)

- Sending a FAX (Fax Driver) Basic
- Creating an Address Book (Fax Driver)
- Edit or Remove a Recipient from an Address Book (Fax Driver)
- Search for a Recipient in an Address Book (Fax Driver)
- Cannot Send Faxes from Computer
- How to Open the Setting Screen of the Fax Driver
- General Notes (Fax Driver)

Sending a FAX (Fax Driver)

You can send faxes using the fax driver from applications that support document printing.

Note

- Only black and white transmission is supported.

1. Make sure that the machine is turned on.

2. Open the document you want to fax with an application (such as Notepad), and then click the Print command. (The command is **Print...** on the **File** menu.)

3. In **Select Printer** or **Name** in the **Print** dialog box, select **Canon XXX series FAX** (where "XXX" is the model name).

4. Click **Print** or **OK**.

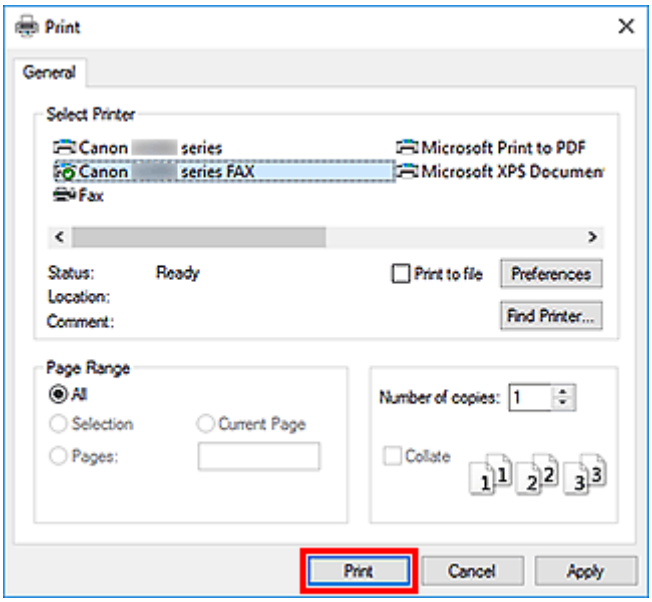

* **Print** dialog box in Notepad

Note

- Click **Preferences** or **Properties** in the **Print** dialog box to open the print settings dialog box of the fax driver in which you can set the paper size and print orientation. For details on how to open the print settings dialog box of the fax driver, see "How to Open the Setting Screen of the Fax Driver."

5. Click **Open Address Book...** in **Set Recipient** in the **Send Fax** dialog box.

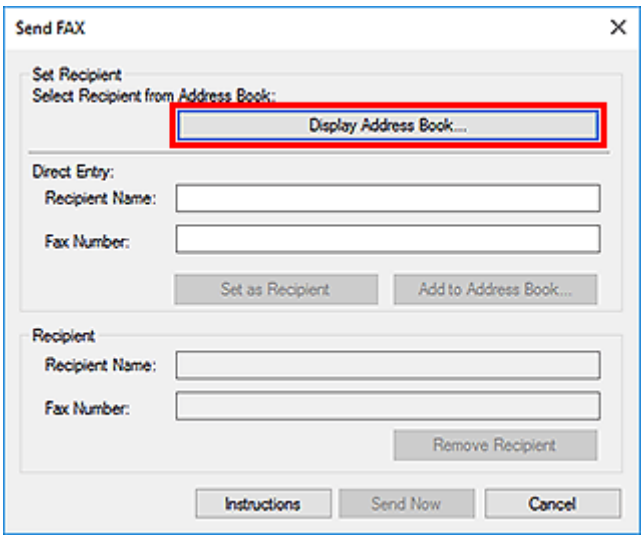

6. Select a recipient from **Recipient Name** in the **Select Recipient from Address Book** dialog box, then click **Set as Recipient**.

The selected recipient is reflected in **Recipient** in the **Send Fax** dialog box.

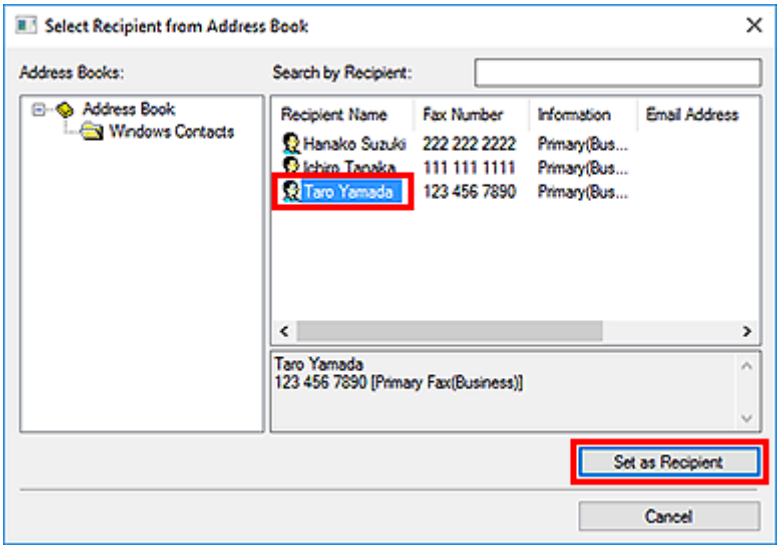

Important

- You cannot specify a recipient if there is no recipient registered in the address book. Register the recipient in the address book and reopen the address book.

  For details on how to register recipients in the address book, see "Creating an Address Book (Fax Driver)."

- If the recipient's fax/telephone number is entered incorrectly or the registered fax/telephone number is incorrect, the fax may be sent to an unexpected recipient. When sending an important fax, it is recommended that you send it after confirming the entered information and recipient's status.

Note

- You can also specify **Recipient** by entering the **Recipient Name** and **Fax Number** in **Direct Entry** in the **Send Fax** dialog box and then clicking **Set as Recipient**.

- For details on valid characters, see "General Notes (Fax Driver)."
- You can send faxes even if only the **Fax Number** is entered.
- You can register the recipient you entered to the address book by clicking **Add to Address Book...**. For details on how to register recipients in the address book, see "Creating an Address Book (Fax Driver)."

- Add the outside line access number before the fax number as needed.

  (Example: When the outside line access number is "0" and the fax number is "XXX-XXXX", enter "0XXX-XXXX".)

7. Click **Transmit**.

When a confirmation message is displayed, click **OK**.

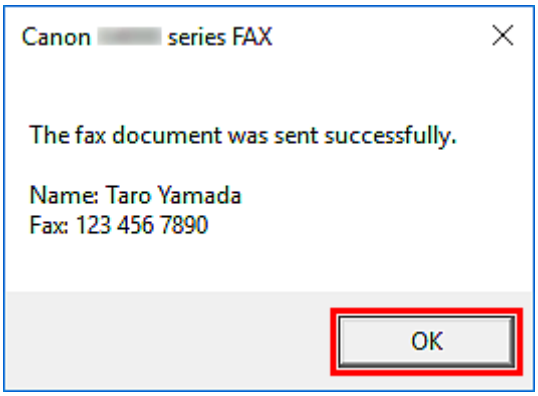

Important

- If you cannot send a fax due to line failure or other problem, see "Cannot Send Faxes from Computer."

Canceling Transmission

If you click **Transmit** in the **Send Fax** dialog box, the printer icon is displayed in the taskbar. Double-click this icon to display the list of fax jobs awaiting transmission or being sent.

Right-clicking a job and selecting **Cancel** stops transmission.

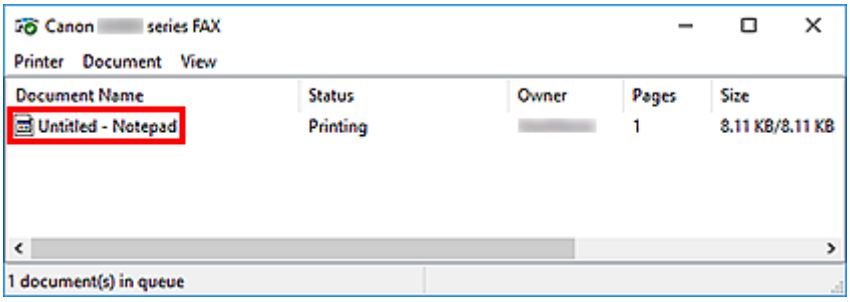

Creating an Address Book (Fax Driver)

By using the address book, you can send a fax by simply specifying a recipient from it.

You can register the recipient's name, fax number and other information in the address book.

Registering a recipient (WAB contact) in the address book

You can register an individual recipient (Contact) in the address book.

1. Open the print settings dialog box of the fax driver.

2. Click **Address Book...** in the displayed dialog box.

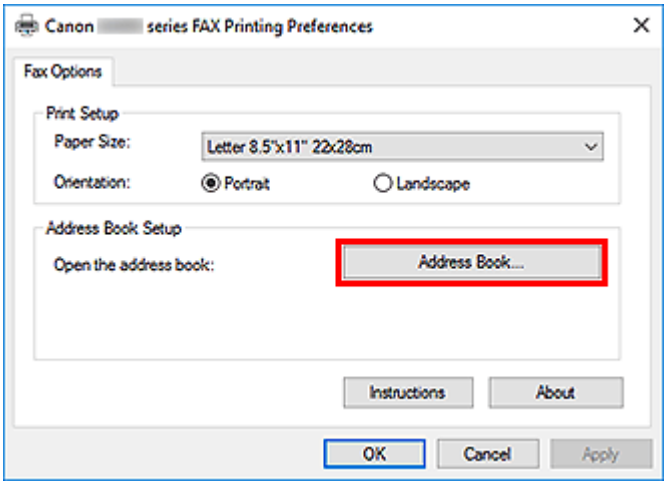

Note

- Once an individual recipient (Contact) is registered in the address book folder (Windows Contacts) as an address book file (.contact file), it can be used in multiple applications. However, you cannot change the address book you use, as only one address book can be created per user.

  Follow the steps below to open Windows Contacts.

  - **Windows 11/Windows 10:**

    Search for "Contacts" from **Search** box.

  - **Windows 8.1/Windows 8:**

    Select the **Search** charm, then search for "Contacts".

  - **Windows 7/Windows Vista:**

    Select **XXXX (user name)** from the **Start** menu, then double-click **Contacts**.

3. In the **Address Book** dialog box, click **New...**.

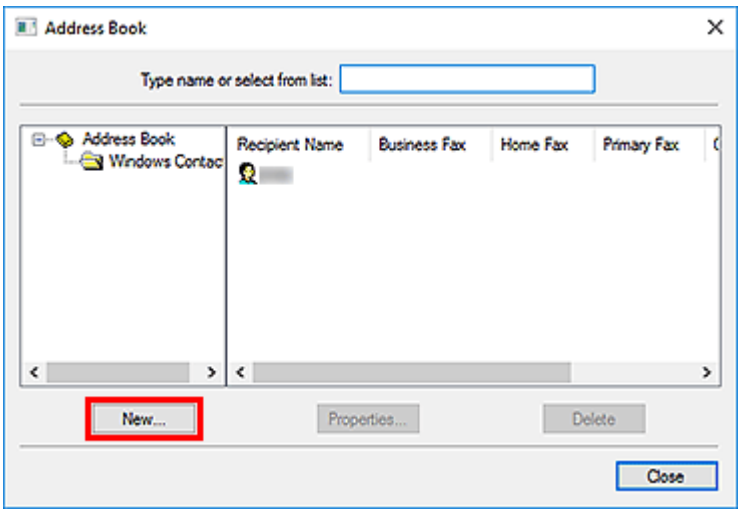

4. Select **Contact** in the **New Entry** dialog box, then click **OK**.

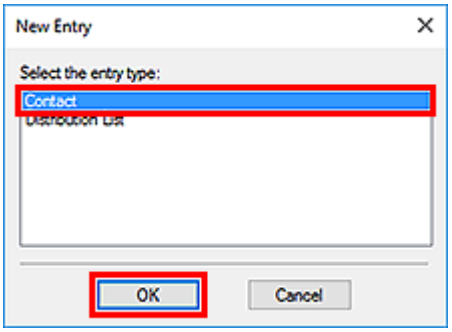

Note

- For faxing, you can only specify the **Contact** (one recipient). You cannot specify a **Distribution List**.

5. On **Name and E-mail** tab of Properties dialog box, enter **First** and **Last**.

The recipient's name will be printed at the top of the fax received by the recipient.

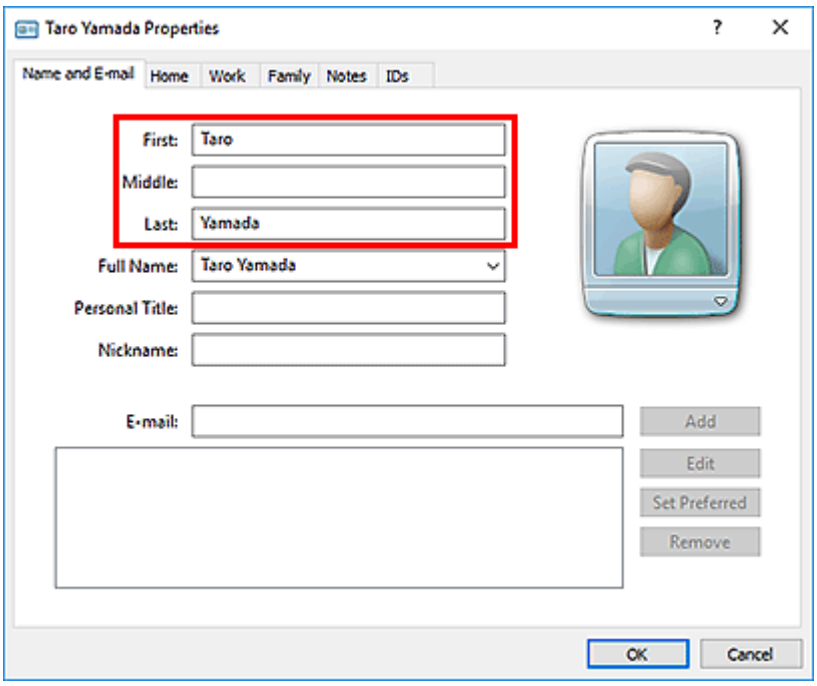

6. Enter the fax number on the **Home** or **Work** tab, then click **OK**.

An individual recipient (Contact) is registered in the address book.

Note

- You can also register a recipient by clicking the **Add to Address Book...** button on the **Send Fax** dialog box after entering the recipient.

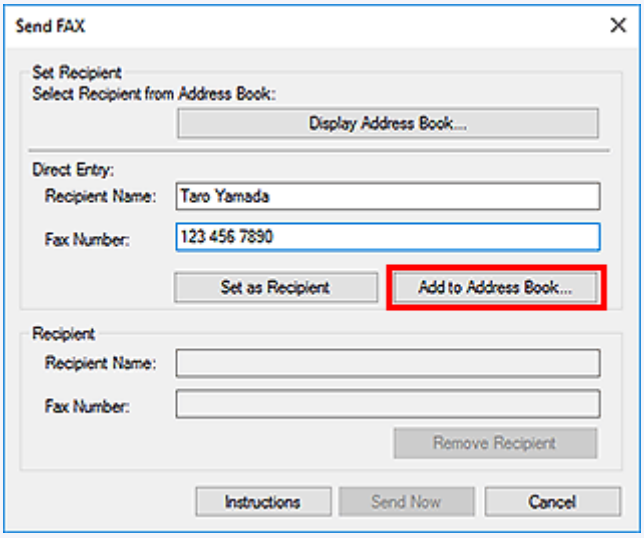

- Add the outside line access number before the fax number as needed.

  (Example: When the outside line access number is "0" and the fax number is "XXX-XXXX", enter "0XXX-XXXX".)

- If you upgrade from Windows XP to Windows Vista, the address book you created in Windows XP may not be reflected in Windows Vista. In this case, open the address book in the following procedure and reflect the information to a new address book.

  1. Select **Control Panel** > **Appearance and Personalization** > **Folder Options**.

2. Click the **View** tab of the **Folder Options** dialog box, select **Show hidden files and folders** in **Advanced settings**, then click **OK**.
3. From the **Start** menu, select **XXXX (user name)**, then double-click **AppData** > **Roaming** > **Canon** > **MP5** to open the folder.
4. Double-click the ".wab" file.

   The address book will be reflected in Windows Vista automatically.

Related Topic

- Edit or Remove a Recipient from an Address Book (Fax Driver)
- Search for a Recipient in an Address Book (Fax Driver)

Edit or Remove a Recipient from an Address Book (Fax Driver)

You can change the recipients' names, fax numbers and other information, or delete recipients registered in the address book.

Editing Recipients in an address book

1. Open the print settings dialog box of the fax driver.

2. Click **Address Book...** in the displayed dialog box.

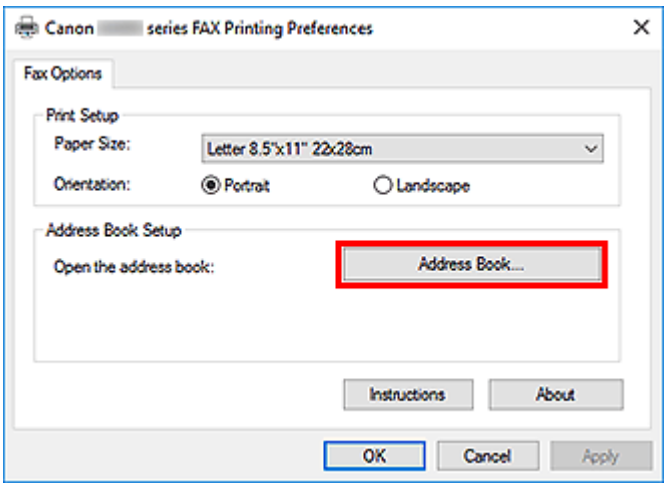

3. Select the recipient you want to edit from the **Address Book** dialog box, then click **Properties...**.

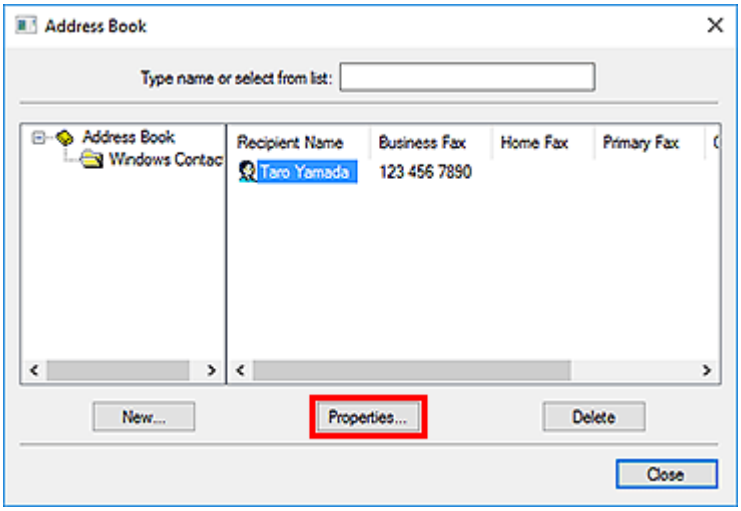

4. Change information as needed on the Properties dialog box, then click **OK**.

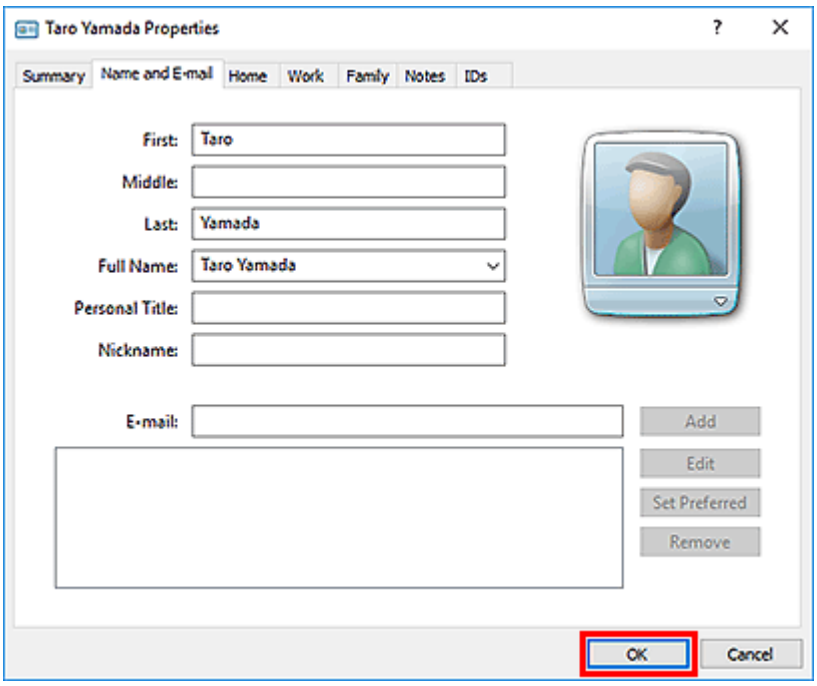

Removing Recipients from an address book

1. Open the print settings dialog box of the fax driver.

2. Click **Address Book...** in the displayed dialog box.

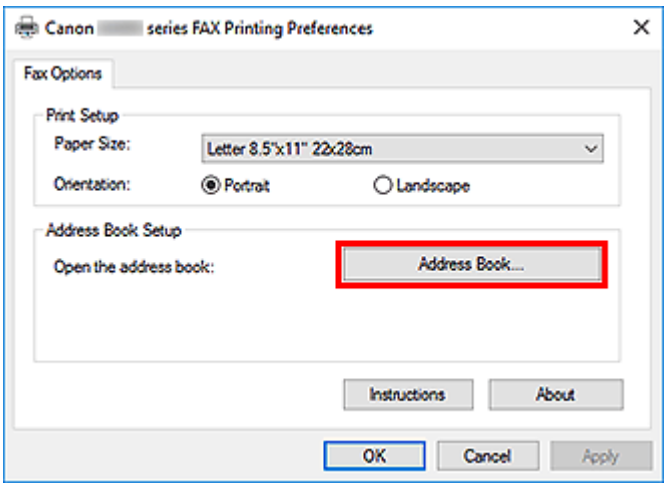

3. Select the recipient you want to delete from the **Address Book** dialog box, then click **Delete**.

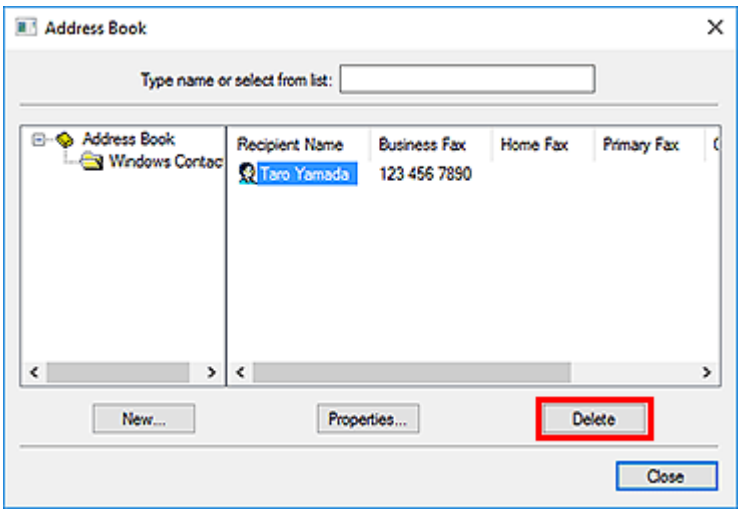

4. When a confirmation message is displayed, click **Yes**.

Search for a Recipient in an Address Book (Fax Driver)

You can search for recipients registered in the address book by name.

1. Open the document you want to fax with an application (such as Notepad), and then click the Print command. (The command is **Print...** on the **File** menu.)

2. In **Select Printer** or **Name** in the **Print** dialog box, select **Canon XXX series FAX** (where "XXX" is the model name).

3. Click **Print** or **OK**.

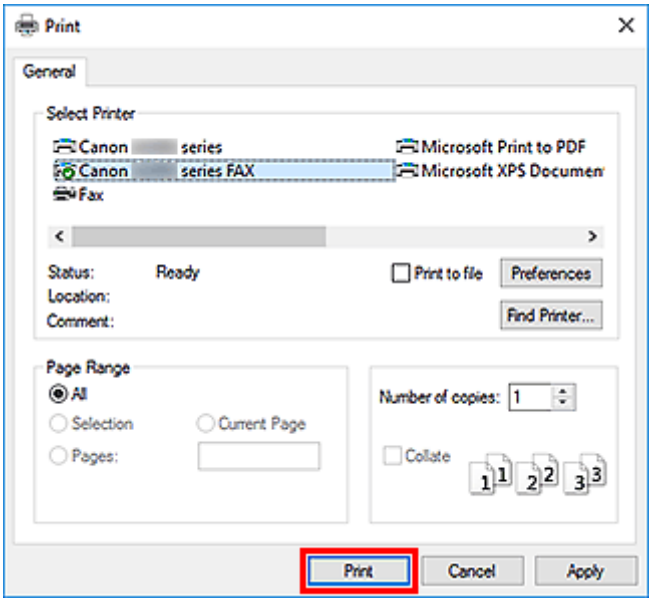

* **Print** dialog box in Notepad

4. Click **Open Address Book...** in **Set Recipient** in the **Send Fax** dialog box.

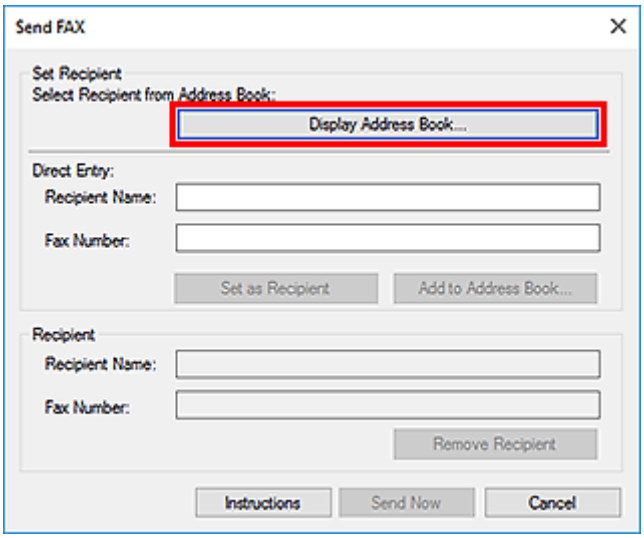

5. Enter the name of the recipient you want to search for in **Search by Recipient** in the **Select Recipient from Address Book** dialog box.

If the entered name is found, the recipient will be displayed in the contact list with its name selected.

While the name is selected, click **Set as Recipient** to enter it as the recipient.

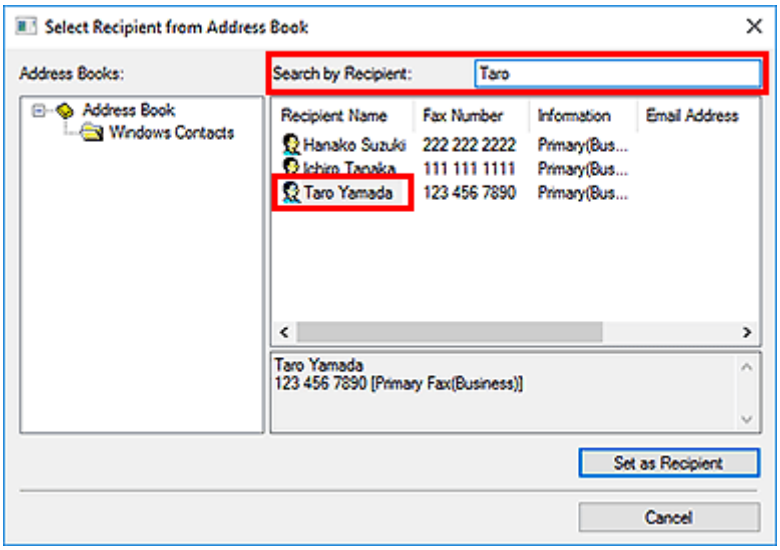

Important

- You cannot search by criteria other than name.

Q

Cannot Send Faxes from Computer

A

Check 1 Is the power turned on?

You cannot send faxes if the power is turned off. Press the **ON** button to turn the power on.

If you disconnected the power cord without turning off the power (one of the buttons on the operation panel is lit), reconnecting it turns on the power.

If you disconnected the power cord after pressing the **ON** button to turn off the power (no buttons on the operation panel are lit), reconnect it, then press the **ON** button to turn on the power.

If the power was turned off due to power failure, etc., the power is automatically turned on when the power failure is resolved.

Important

- Confirm that all lamps on the operation panel are off before unplugging the power cord, then unplug the power cord.

  If a power failure occurs or you unplug the power cord, all faxes stored in the machine's memory are deleted.

Note

- If the faxes stored in the machine's memory are deleted by a power failure or unplugging the power cord, the list of the faxes deleted from the machine's memory will be printed after turning the machine on.

Check 2 Is a document being sent from memory or a fax being received into memory?

When the message for the transmission/reception is displayed on the machine's LCD (Liquid Crystal Display) monitor, a fax is being sent from/received into machine's memory. Wait until the transmission/reception is complete.

Check 3 Is the telephone line type set correctly?

Check the telephone line type setting and change it as necessary.

Check 4 Is **Dial tone detect** set to **ON**?

Resend the fax after a while.

If you still cannot send the fax, select **OFF** for **Dial tone detect** in **Advanced FAX settings** under **FAX settings**.

Check 5 Is the recipient's fax number correct?

Check the recipient's fax number, then send the document again.

➡ Sending a FAX (Fax Driver)

Note

- For details on how to change the recipients registered in the address book, see "Edit or Remove a Recipient from an Address Book (Fax Driver)."

Check 6 Does an error occur during transmission?

Check if a message is displayed in the computer screen.

If displayed, check the message, then resolve the error.

Check 7 Does a printer error occur?

Check if a message is displayed on the LCD monitor.

If a support code is displayed, see "Support Code List" for your model from Home of the Online Manual.

If no support code is displayed, see "A Message Is Displayed" for your model from Home of the Online Manual.

If you are in a hurry, press the **Stop** button to close the message, then send the fax.

Check 8 Is the telephone line connected correctly?

Reconnect the telephone line cable to the telephone line jack.

If the telephone line is connected correctly, then there is a problem with your telephone line. Contact your telephone company and the manufacturer of your terminal adapter or telephone adapter.

How to Open the Setting Screen of the Fax Driver

The following explains how to display the print settings dialog box or the Properties dialog box of the fax driver from your application or from the fax/printer icon.

Opening the Print Settings Dialog Box of the Fax Driver from an Application

1. Click the Print command in the application.

   In general, you can open the **Print** dialog box by selecting Print from the File menu.

2. Select "your model name," then click **Preferences** (or **Properties**).

   The print settings dialog box of the fax driver appears.

Opening the Print Settings Dialog Box of the Fax Driver from the Fax/Printer Icon

- **Windows 11:**

  1. Select **Settings** > **Bluetooth and Devices** > **Printers and Scanners**.

  2. Right-click the **Canon XXX series** icon or **Canon XXX series FAX** icon and select **Printing Preferences**, then **Canon XXX series FAX**. (Where "XXX" is the model name.)

- **Windows 10／Windows 8.1／Windows 8／Windows 7 :**

  1. Select **Control Panel** > **Hardware and Sound** > **Devices and Printers**.

  2. Right-click the **Canon XXX series** icon or **Canon XXX series FAX** icon and select **Printing Preferences**, then **Canon XXX series FAX**. (Where "XXX" is the model name.)

- **Windows Vista:**

  1. Select **Control Panel** > **Hardware and Sound** > **Printers**.

  2. Right-click the **Canon XXX series FAX** icon (where "XXX" is the model name) and select **Printing Preferences...**.

Opening the Properties Dialog Box of the Fax Driver from the Fax/ Printer Icon

- **Windows 11:**

  1. Select **Settings** > **Bluetooth and Devices** > **Printers and Scanners**.

  2. Right-click the **Canon XXX series** icon or **Canon XXX series FAX** icon and select **Printing Preferences**, then **Canon XXX series FAX**. (Where "XXX" is the model name.)

- **Windows 10／Windows 8.1／Windows 8／Windows 7 :**

  1. Select **Control Panel** > **Hardware and Sound** > **Devices and Printers**.

  2. Right-click the **Canon XXX series** icon or **Canon XXX series FAX** icon and select **Printer Properties**, then **Canon XXX series FAX**. (Where "XXX" is the model name.)

- **Windows Vista:**

  1. Select **Control Panel** > **Hardware and Sound** > **Printers**.

  2. Right-click the **Canon XXX series FAX** icon (where "XXX" is the model name) and select **Properties**.

General Notes (Fax Driver)

This fax driver is subject to the following restrictions.

Keep the following points in mind when using the fax driver.

- The fax driver may not work correctly when sending a Microsoft Excel 2002 document as a fax with the **Allow A4/Letter Paper Resizing** option checked in Microsoft Excel 2002. Follow the instructions below to solve the problem:
  1. Click **Options...** from the **Tools** menu.
  2. Uncheck the **Allow A4/Letter Paper Resizing** option on the **International** tab.
- When using a network compatible printer, you cannot send faxes from multiple computers at the same time. If you try to send a fax from a computer while a fax is being sent from another computer, a message appears and your fax cannot be sent.

  Make sure that a fax is not being sent from another computer.
- If you assign the fax driver to the Bluetooth port, you cannot send a fax from the computer.
- You can use the following characters for **Fax Number**:

Character	Explanation
0 - 9 * #	For use in telephone and fax numbers.
, p	To place a pause between numbers.
P	To place a pause at the end of a sequence of numbers.
T	Numbers after the T will be sent as a tone signal.
+ - ( ), space	To make the number easier to read. You cannot insert a space at the front of a number.

  *You cannot use ".", "R", "M", or "E".
- You can enter the following number of characters in **Recipient Name** and **Fax Number**.

  Recipient Name: Up to 16 characters

  Fax Number: Up to 60 characters

  * The number of characters you can enter differs in some regions.
- The fax driver does not work correctly if you uncheck the **Enable printer pooling** option on the **Ports** tab of the **Canon XXX series FAX Properties** dialog box (where "XXX" is the model name). Check that the option is checked.

For details on how to open the **Canon XXX series FAX Properties** dialog box, see "Opening the Properties Dialog Box of the Fax Driver from the Fax/Printer Icon."

Sending Faxes from Computer (macOS)

- Sending Faxes Using AirPrint
- General Notes (Fax Transmission Using AirPrint)

Sending Faxes Using AirPrint

You can send faxes from a printer using AirPrint.

To send faxes, add your printer to your computer.

Checking Environment

First, check your environment.

- **AirPrint operation environment**

  A computer running macOS.

  Note

  - For supported operating system versions, click Home to return to the top page of the Online Manual for your model and search for "Specifications."

- **Requirement**

  The computer and your printer must be connected correctly.

Adding Printer to Computer

1. Open **System Settings**, and select **Printers & Scanners**

2. Click (**Add Printer, Scanner or Fax...**) to display printer list.

3. Select printer model name with **Bonjour Multifunction** displayed.

   Note

   - If the printer does not appear, check the following.
     - The printer is turned on.
     - The firewall function of the security software is off.
     - The printer is connected to the access point or directly connected to the computer.

4. Select**Canon XXX series** (where "XXX" is the model name) from **Use**.

5. Click **Add**.

Sending Fax

Note

- Only black and white transmission is supported.

1. Make sure printer is on.

2. In application, open document to fax.

3. Open Print dialog.

   To open the Print dialog, you typically select Print... from the File menu of your application software.

4. Select **Canon XXX series - Fax** (where "XXX" is the model name) from **Printer** list.

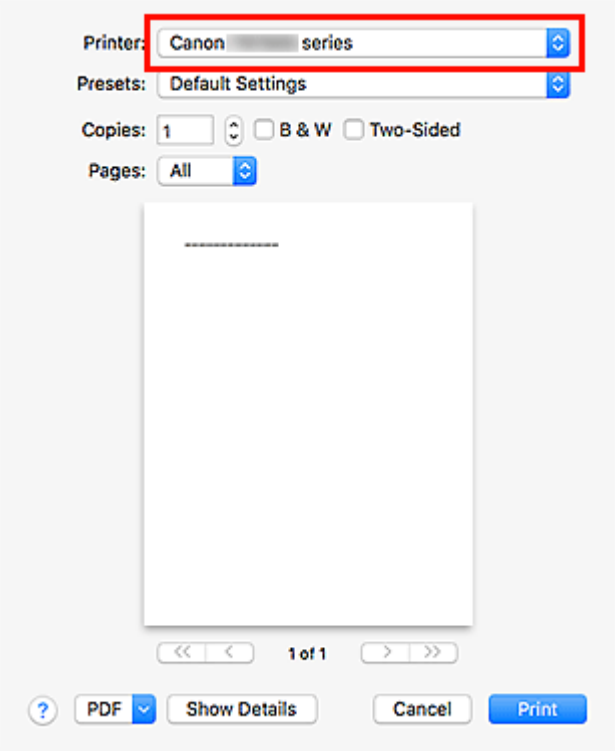

5. Specify fax paper settings as needed.

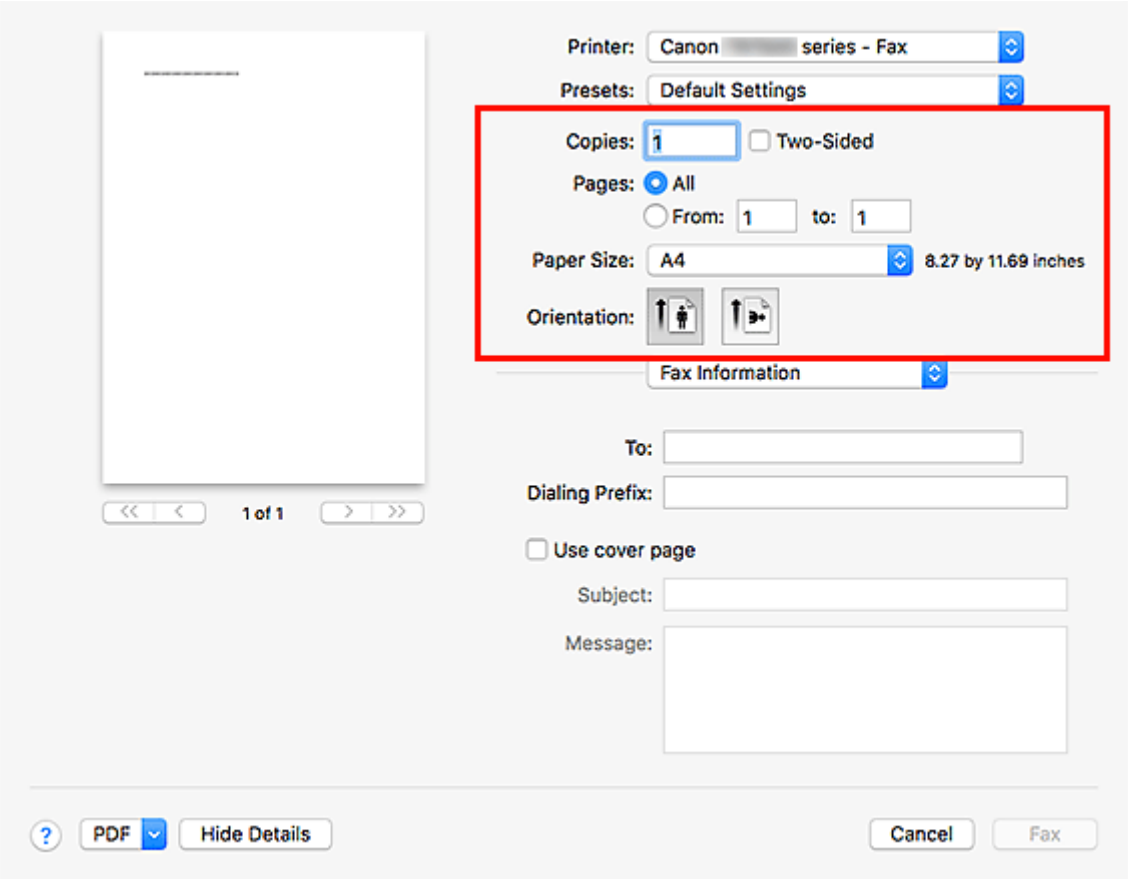

6. Enter fax/telephone numbers in **To**.

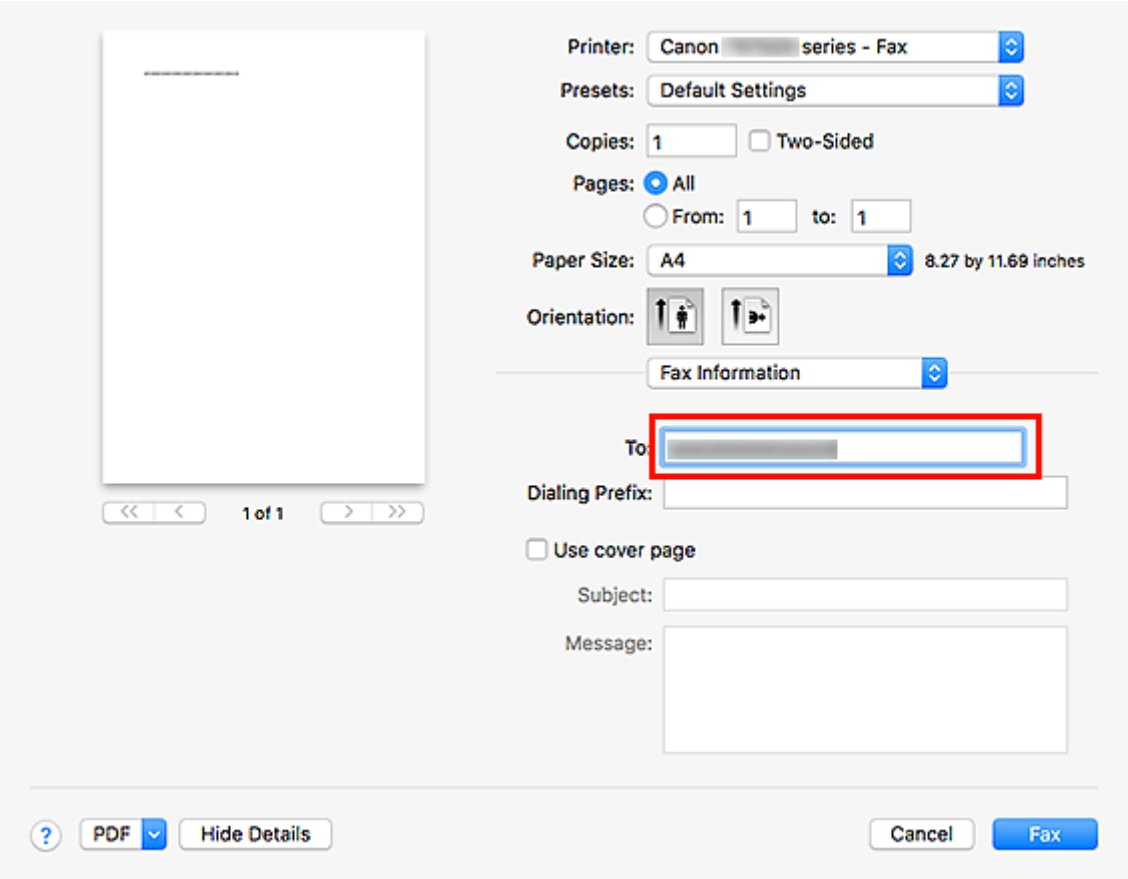

If you specify a dialing prefix, enter the code in **Dialing Prefix** and specify the cover page settings as needed.

7. Click **Fax**.

   The number is dialed automatically and the fax is sent.

   Note

   - To cancel sending the fax, press the printer's **Stop** button.

Automatic Redialing

If the fax could not be sent (for example, when the recipient was busy), the number is redialed automatically according to the automatic redialing setting of the printer.

You can enable or disable automatic redialing. If you enable automatic redialing, you can specify the maximum number of redial attempts and the length of time the printer waits between redial attempts.

Note

- To cancel automatic redialing, wait until redialing starts, and then press the printer's **Stop** button.
- For more details, click Home to return to the top page of the Online Manual for your model and search for "FAX settings."

General Notes (Fax Transmission Using AirPrint)

Sending faxes is subject to the following restrictions.

- Enter the characters in **To** and **Dialing Prefix** so that the total number of characters is within 40 characters.
- You can use the following characters for **To**:

Character	Explanation
0 - 9 * #	For use in telephone and fax numbers.
+ space	To make the number easier to read. You cannot insert a space at the front of a number.

- You can use the following characters for **Dialing Prefix**:

Character	Explanation
0 - 9 * #	For use in telephone and fax numbers.
p	To place a pause between numbers.
T	Numbers after the T will be sent as a tone signal.
+ space	To make the number easier to read. You cannot insert a space at the front of a number.

Receiving Faxes

- Receiving Faxes
- Changing Paper Settings
- Memory Reception
- Receiving Faxes Using Useful Functions

Receiving Faxes

This section describes the preparation necessary for receiving a fax and how to receive a fax.

Preparing for Receiving Fax

Prepare for receiving a fax according to the following procedure.

1. Check that printer is turned on.

2. Select **Fax** on the HOME screen.

   ➡ Using Touch Screen

   The Fax standby screen is displayed.

3. Check receive mode setting.

   Check the receive mode setting displayed on the Fax standby screen.

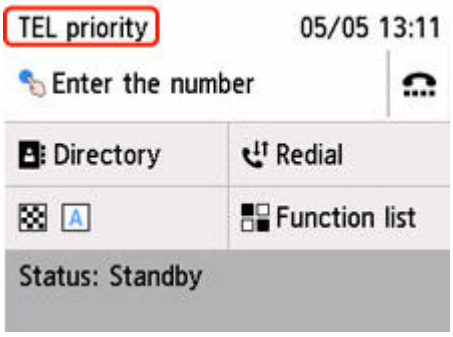

   Note

   - For details on how to change the receive mode:

     ➡ Setting Receive Mode

4. Load paper.

   Load the sheets of plain paper.

5. Specify paper settings as necessary.

   ➡ Changing Paper Settings

   This completes the preparation for receiving fax.

   When a fax is received, it is printed on the loaded paper automatically.

Receiving Fax

Depending on the selected receive mode, the receive operation varies.

Note

- For details on the receive mode:

  ➡ Setting Receive Mode

- You can specify the advanced settings of each receive mode.

  For details on the advanced settings of the receive mode:

  ➡ Advanced Settings of Receive Mode

- The received faxes are automatically printed during default setting of the printer. The faxes are stored in the printer's memory when they could not be printed.

  ➡ Memory Reception

- When receiving a fax, you can forward received faxes to the shared folder on the computer as PDF files automatically.

  ➡ Forwarding Document in Printer's Memory to Shared Folder on Computer

When TEL priority mode is selected:

- **When the call is a fax:**

  The telephone will ring when a call incomes.

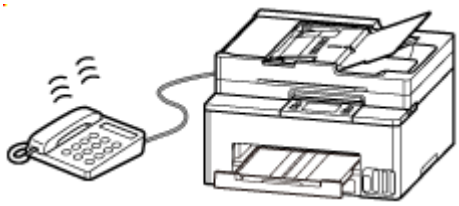

  Pick up the handset. If you hear the fax tone, wait for at least 5 seconds after it stops, and then hang up the handset.

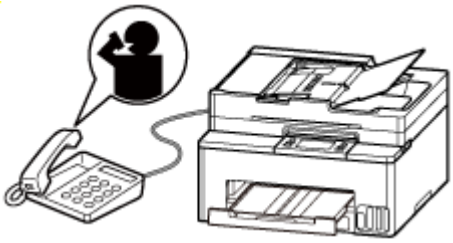

  The printer will receive the fax.

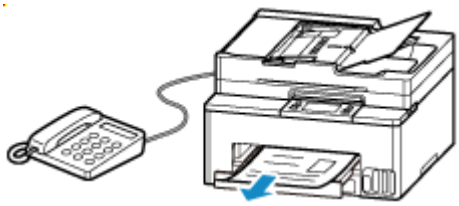

Note

- If the printer will not switch to fax reception, select **Fax** again on the HOME screen, and then press **Black** button or the **Color** button to receive the fax.

- To receive a fax without picking up the handset, select **Manual/auto switch: ON** in **Advanced**. **RX start time** allows you to specify the number of seconds until the printer switches to fax reception.
- If you have subscribed to Duplex Ringing service in Hong Kong, the telephone will ring a specified number of times when there is an incoming call with a fax distinctive ring pattern. Then, the printer will switch to fax reception automatically without the handset being picked up.

  The number of times to ring the telephone until switching to fax reception can be changed.
- Set the printer to enable you to initiate fax reception from a connected telephone (remote reception).

  ➡ Remote Reception
- **When the answering device is connected to the printer:**
  - If the answering device is set to the answering mode, select **User-friendly RX: ON** in **Advanced**. If the call is a fax, the printer will receive the fax automatically.
  - If the answering mode is turned off on the answering device, pick up the handset. If you hear the fax tone, wait for at least 5 seconds after it stops, and then hang up the handset.
  - If **Manual/auto switch: ON** is selected in **Advanced**, set **RX start time** to longer than the time before the answering device starts playing the answering message. After making this setting, we recommend that you call the answering device using a mobile phone, etc. to confirm that messages are recorded successfully in the answering device.
  - Set your answering device to answering mode and adjust it as follows:

    - The entire message should be no longer than 15 seconds.

    - In the message, tell your callers how to send a fax.

- **When the call is a voice call:**

  The telephone will ring when a call incomes.

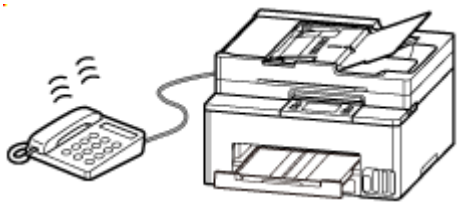

  Pick up the handset, and talk on the telephone.

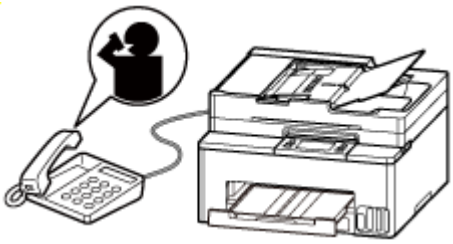

Note

- If the printer unexpectedly switches to fax reception during telephone calls, select **User-friendly RX: OFF** in **Advanced**.

- If **Manual/auto switch: ON** is selected in **Advanced**, you must answer an incoming call by picking up the handset within the time specified in **RX start time**. Otherwise the printer will switch to fax reception.

When Fax only mode is selected:

- **When the call is a fax:**

  The printer will receive the fax automatically.

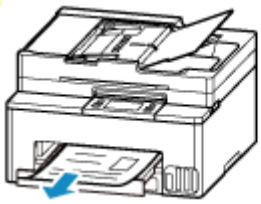

Note

- If a telephone is connected to the printer, the telephone will ring when a call incomes.
- You can change the number of times to ring the telephone with **Ring count** in **Advanced**.

When DRPD or Network switch is selected:

- **When the call is a fax:**

  The telephone will ring when a call incomes.

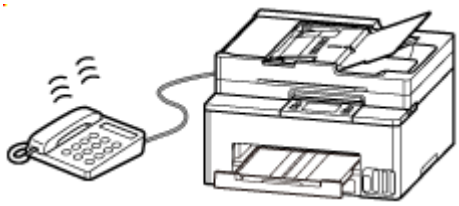

  The printer will receive the fax automatically when the fax ring pattern is detected.

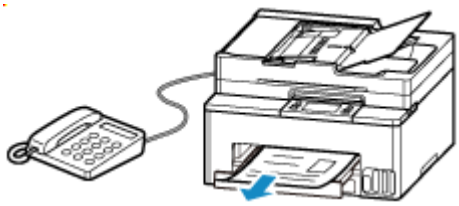

Note

- You can change the number of times to ring the telephone.

  ➡ Advanced Settings of Receive Mode

- **When the call is a voice call:**

  The telephone will ring when a call incomes.

  When the printer does not detect the fax ring pattern, the telephone will continue ringing.

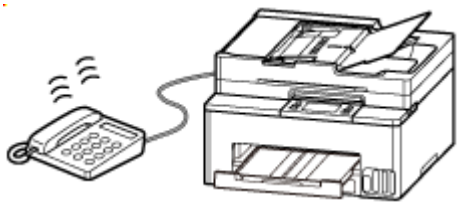

Pick up the handset, and talk on the telephone.

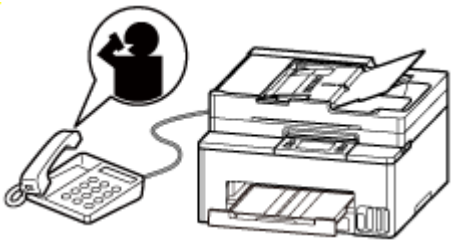

Note

- To use this feature, you need to subscribe to a compatible service provided by your telephone company.
- **For DRPD**

  You need to select the appropriate ring pattern on the printer.

  ➡ Setting DRPD Ring Pattern (US and Canada only)
- **For Network switch**

  The name of this service varies depending on the country or region. This setting may not be also available depending on the country or region.

Changing Paper Settings

This printer prints received faxes to paper loaded in the printer beforehand. You can use the operation panel to change the paper settings for printing faxes. Make sure that the settings are appropriate for the loaded paper.

Important

- If the size of loaded paper is different from that specified in the paper size setting, **Check the page size and tap [OK].** are displayed on the touch screen.

  If no paper is loaded, or paper has run out while printing is in progress, the error message for no paper is displayed on the touch screen.

  After checking the contents of the touch screen, load paper and select **OK**.

  You can also press the **Stop** button to close the message and print the stored documents in the printer's memory later.

  ➡ Printing Document in Printer's Memory

Note

- If the sender sends a document that is larger than Letter-size or Legal-size, such as 11 x 17 inches, the sender's device may send the fax automatically reduced in size or divided, or send only a part of the original.

1. Check that printer is turned on.

2. Select **Fax** on the HOME screen.

   ➡ Using Touch Screen

   The Fax standby screen is displayed.

3. Select **Function list**.

   The **Function list** screen is displayed.

4. Select **Fax paper settings**.

   The **Fax paper settings** screen is displayed.

5. Specify settings.

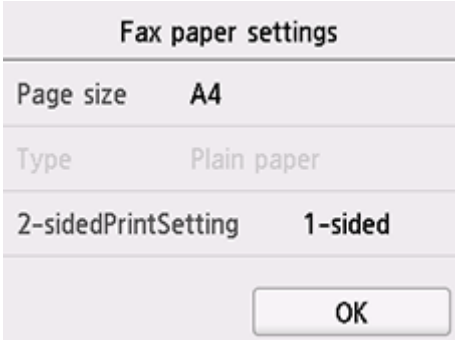

Page size

Select the page size.

Type

The paper type is set to **Plain paper**.

2-sidedPrintSetting

Select two-sided printing or single-sided printing.

Two sided printing is available for black & white faxes. Color faxes are printed on the single-side of paper regardless of this setting.

After **2-sided** is selected for **2-sidedPrintSetting**, select stapling side.

Note

- When **Page size** is set to **A4** or **Letter**, the received faxes are printed on the two-sides of paper.

6. Select **OK**.

Memory Reception

The printer prints the received fax automatically by default. And furthermore, the printer stores the received fax in its memory. When the faxes are stored in the printer's memory, the **FAX Memory** lamp is lit or flashes.

In the following conditions, the received fax is not printed automatically, only is stored in the printer's memory. Then **Fax received. Saved in memory.** is displayed at the Fax standby screen.

- **When Do not print is selected for Received documents in Auto print settings under Fax settings**
- **An error has occurred on the printer:**

  If you select **Print** for **Received documents** in **Auto print settings** under **Fax settings**, a received fax will be printed automatically. However, if any of the following errors occurs, the received fax will not be printed. It will instead be stored in the printer's memory.

  When the error is resolved, the fax stored in the printer's memory is printed automatically.

  - Paper has run out:

    Load paper, then select **OK**.
  - A different size of paper from that specified by **Page size** in **Fax paper settings** is loaded:

    Load the same size of paper as that specified by **Page size** in **Fax paper settings**, and then select **OK**.
  - The amount of remaining ink is insufficient to print a fax:

    Refill ink tanks.

    ➡ Refilling Ink Tanks
  - The maintenance cartridge is full:

    Replace the maintenance cartridge.

    ➡ Replacing the Maintenance Cartridge
- **You pressed the Stop button to cancel printing of a fax:**

  Press **HOME** button and select **Fax** to resume printing of the fax.

Important

- When the printer's memory is full, the faxes stored latest overwrite those stored earliest. However, the unprinted faxes are not overwritten.
- If the printer's memory is full with the unprinted faxes, the printer cannot receive the faxes. Check the **FAX Memory** lamp regularly, print the faxes, or forward them to the shared folder of a computer and delete them from the printer's memory.

  ➡ Document Stored in Printer's Memory

Note

- The printer can store up to max. 250 pages* (max. 30 documents) of faxes in the printer's memory.

  * When using ITU-T No.1 chart (Standard mode)

- If the printer's memory becomes full during memory reception, only pages which already have been received are stored in the memory. Print the received faxes stored in the printer's memory or forward them to the shared folder of a computer, and then delete them from the printer's memory and have the sender resend the faxes.

  ➡ Document Stored in Printer's Memory

- We recommend you check printed pages immediately after faxes are received. If a fax remains in the printer's memory, you can reprint it after refilling the ink tank.

Other Useful Fax Functions

- Document Stored in Printer's Memory

Document Stored in Printer's Memory

The faxes will be stored in the printer's memory automatically when they are received. However, printer's memory has an upper limit on the number of faxes or subjects it can contain. When the printer's memory is full, faxes stored latest will overwrite those stored earliest.

By default, the received faxes will be printed automatically after they are received.

In the following cases, the received faxes are not printed. The unprinted faxes are not overwritten even if the printer receives the faxes anew.

- Paper has run out.
- A different size of paper from that specified by **Page size** in **Fax paper settings** is loaded.
- **Do not print** is selected for **Received documents** in **Auto print settings** under **Fax settings**.
- You pressed the **Stop** button to cancel printing of a received fax.
- The amount of remaining ink is insufficient to print a fax.
- The maintenance cartridge is full.

If the printer's memory is full with the unprinted faxes, the printer cannot receive the faxes. Check the **FAX Memory** lamp regularly, print the faxes, or forward them to the shared folder of a computer and delete them from the printer's memory.

➡ Printing Document in Printer's Memory
➡ Forwarding Document in Printer's Memory to Shared Folder on Computer
➡ Deleting Document in Printer's Memory

Note

- The printer can store up to max. 250 pages* (max. 30 documents) of faxes in the printer's memory.

  * When using ITU-T No.1 chart (Standard mode)
- When confirming, printing, or deleting a document stored in the printer's memory, you specify it by its transaction number. If you do not know the transaction number for your target document, print the list of documents (MEMORY LIST) first.

  For details on how to print MEMORY LIST, see Printing Document in Printer's Memory.
- We recommend you check printed pages immediately after faxes are received. If a fax remains in the printer's memory, you can reprint it after refilling the ink tank.

About FAX Memory lamp

The **FAX Memory** lamp lights, flashes, or is off depending on the faxes stored in the printer's memory.

OFF: Faxes are not stored in the printer's memory.
Lights: Printed fax is stored in the printer's memory.
Flashes: During reception or unprinted fax is stored in the printer's memory.

Note

- When **Do not print** is selected for **Received documents** in **Auto print settings**, the **FAX Memory** lamp lights even if the unprinted fax is stored in the printer's memory.

Printing Document in Printer's Memory

You can print a specified document in the printer's memory or print all the received documents in its memory at a time.

When printing a specified document, you specify it by its transaction number. If you do not know the transaction number for your target document, print the list of documents (MEMORY LIST) first.

1. Check that printer is turned on.

2. Load paper.

3. Select **Fax** on the HOME screen.

   ➡ Using Touch Screen

   The Fax standby screen is displayed.

4. Select **Function list**.

   The **Function list** screen is displayed.

5. Select **Memory reference**.

   The memory list is displayed.

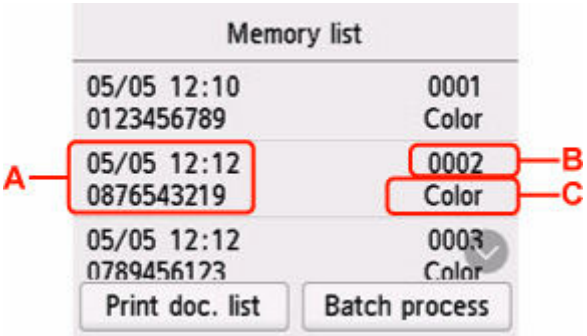

   A: Date and time of transaction and fax/telephone number

   B: Transaction number (TX/RX NO.)

   A transaction number from "0001" to "4999" indicates a document being sent.

   A transaction number from "5001" to "9999" indicates a document being received.

   C: **Color** is displayed for color transmission/reception. Nothing is displayed for black & white transmission/reception.

   Note

   - If no document is stored in the printer's memory, **There is no document in memory.** is displayed. Select **OK** to return to the previous screen.

6. Select a print menu.

- To print the memory list (MEMORY LIST):

  You can print a list of the documents in the printer's memory by selecting **Print doc. list**.

  When the print confirmation screen is displayed, select **Yes**. The printing starts.

  MEMORY LIST shows the transaction number of the unsent or unprinted fax (TX/RX NO.), transaction mode, recipient's number, and the date and time of the transaction.

  A transaction number from "0001" to "4999" on MEMORY LIST indicates a document being sent. A transaction number from "5001" to "9999" on MEMORY LIST indicates a document being received.

- To specify a document to print:

  Select a document to print on the **Memory list** screen, select **Print specified document**.

  Note

  - If the specified document is not stored in the printer's memory, **There is no document that can be printed.** is displayed. Select **OK** to return to the previous screen.

  The confirmation screen to select whether to print only the first page of the document is displayed.

  If you select **Yes**, only the first page of the document will be printed. The document is still stored in the printer's memory.

  If you select **No**, all pages of the document will be printed. The screen to confirm whether to delete the printed document in the printer's memory is displayed after printing.

- To print all the received documents stored in the printer's memory:

  Select **Batch process**, and then select **Print all RX documents**.

  When the print confirmation screen is displayed, select **Yes**. All the documents in the printer's memory are printed.

  Each time a document is printed, the screen to confirm whether to delete the printed document in the printer's memory is displayed.

  If you select **Yes**, the printed document in the printer's memory is deleted.

Deleting Document in Printer's Memory

You can delete a specified document in the printer's memory or delete all the documents in its memory at a time.

Note

- When deleting a specified document, you specify it by its transaction number. If you do not know the transaction number for your target document, print the list of documents (MEMORY LIST) first.

  ➡ Printing Document in Printer's Memory

1. Check that printer is turned on.

2. Select **Fax** on the HOME screen.

   ➡ Using Touch Screen

   The Fax standby screen is displayed.

3. Select **Function list**.

   The **Function list** screen is displayed.

4. Select **Memory reference**.

   The memory list is displayed.

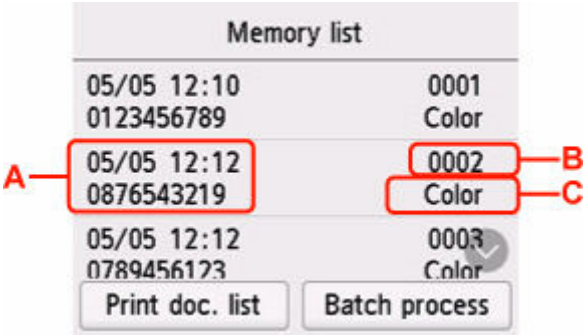

   A: Date and time of transaction and fax/telephone number

   B: Transaction number (TX/RX NO.)

   A transaction number from "0001" to "4999" indicates a document being sent.

   A transaction number from "5001" to "9999" indicates a document being received.

   C: **Color** is displayed for color transmission/reception. Nothing is displayed for black & white transmission/reception.

   Note

   - If no document is stored in the printer's memory, **There is no document in memory.** is displayed. Select **OK** to return to the previous screen.

5. Select a delete menu.

- To specify a document to delete:

  Select a document to delete on the **Memory list** screen, select **Delete specified doc.**.

  Note

  - If the specified document is not stored in the printer's memory, **There is no document that can be deleted.** is displayed. Select **OK** to return to the previous screen.

  The confirmation screen is displayed.

  If you select **Yes**, the specified document is deleted from printer's memory.

- To delete all documents stored in the printer's memory:

  Select **Batch process**, and then select **Delete all documents**.

  The confirmation screen is displayed.

  If you select **Yes**, all documents are deleted from printer's memory.

Forwarding Document in Printer's Memory to Shared Folder on Computer

You can forward the received faxes stored in the printer's memory to the shared folder on the computer as PDF files using the operation panel of the printer.

You can forward a specified document in the printer's memory to the shared folder on the computer or forward all the documents in its memory to the shared folder on the computer at a time.

Important

- Do not disconnect the printer with the computer when the printer forwards received faxes to the shared folder on the computer.
- We assume no responsibility for damage to or loss of data for whatever reason even within the warranty period.

Note

- Register the destination folder using Quick Utility Toolbox in advance.

  For details on how to register the destination folder:

  - For Windows:

    ➡ Destination Folder Settings

  - For Mac OS:

    ➡ Destination Folder Settings

- When forwarding a specified document, you specify it by its transaction number. If you do not know the transaction number for your target document, print the list of documents (MEMORY LIST) first.

  ➡ Printing Document in Printer's Memory

- After forwarding the fax in the printer's memory to the shared folder on the computer, the fax is still stored in the printer's memory.

  For details on how to delete the fax in the printer's memory, see Deleting Document in Printer's Memory.

1. Check that printer is turned on.

2. Make sure that printer is connected with destination computer.

3. Select **Fax** on the HOME screen.

   ➡ Using Touch Screen

   The Fax standby screen is displayed.

4. Select **Function list**.

   The **Function list** screen is displayed.

5. Select **Memory reference**.

The memory list is displayed.

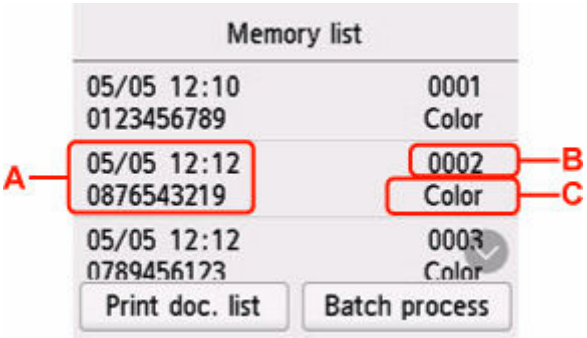

A: Date and time of transaction and fax/telephone number

B: Transaction number (TX/RX NO.)

A transaction number from "0001" to "4999" indicates a document being sent.

A transaction number from "5001" to "9999" indicates a document being received.

C: **Color** is displayed for color transmission/reception. Nothing is displayed for black & white transmission/reception.

Note

- If no document is stored in the printer's memory, **There is no document in memory.** is displayed. Select **OK** to return to the previous screen.

6. Select a forward menu.

- To specify a document to forward to the shared folder on the computer:

  Select a document to forward on the **Memory list** screen, select **Save specified document**.

  Note

  - If the specified document is not stored in the printer's memory, **There is no document that can be forwarded.** is displayed. Select **OK** to return to the previous screen.

  Select **Destination folder** as the destination.

  Select a destination folder to forward the specified document to the shared folder on the computer.

  Note

  - When you specify a PIN code for a registered folder, a screen asking you to enter a PIN code is displayed. Entering the PIN code allows you to assign the shared folder as the destination.

- To forward all the received documents stored in the printer's memory to the shared folder on the computer:

  Select **Batch process**, and then select **Save all RX documents**.

  Select **Destination folder** as the destination.

  Select a destination folder to forward all documents to the shared folder on the computer.

Note

- When you specify a PIN code for a registered folder, a screen asking you to enter a PIN code is displayed. Entering the PIN code allows you to assign the shared folder as the destination.

Note

- You can forward up to 250 pages of fax as one PDF file.
- You can forward up to 2000 PDF files on the shared folder on the computer.
- Faxes are forwarded according to the order of the transaction number when **Save all RX documents** is selected.
- If the printer is disconnected with the computer or if the writing error occurs on the computer while forwarding faxes is in progress, the error message is displayed on the touch screen. Select **OK** to dismiss the error.
- The faxes forwarded to the shared folder are named with the serial number from FAX_0001 (file extension: PDF).

Frequently Asked Questions

Top 6

Network Connection Setup Guide

- List of Support Codes for Printer Errors >
- Network Communication Problems >
- Scanning Problems (Windows) >
- Connecting with Wireless Direct >
- Cannot Send a Fax >

Search by Category

Error

- List of Support Codes for Printer Errors
- When Error Occurred
- Message Is Displayed
- 1003 is displayed
- 1300 is displayed

Network

- Easy Understanding Network Connections
- Solve Network Troubles with The Printer's Diagnostic Functions
- Cannot Find Printer on Network (Windows/macOS)
- Cannot Proceed Beyond Printer Connection Screen (Cannot Find Printer Connected via USB)
- Change to Offline (Windows)
- Printing Network Settings

Printing

- What to Do When Paper Is Jammed
- Printer Does Not Print
- Resolving Print Quality Problems
- Blurry or Fuzzy
- Inaccurate or Bleeding Colors
- Lines Are Misaligned/Distorted

Scan

- Scanning Problems (Windows)
- Scanner Does Not Work (Windows)
- ScanGear (Scanner Driver) Does Not Start (Windows)
- Scan Utility Error Messages (Windows)
- ScanGear (Scanner Driver) Error Messages (Windows)
- Cannot Print (Scan) from Smartphone/Tablet

Fax

- Cannot Send a Fax
- Cannot Print a Fax/"Fax received. Saved in memory." Appears
- Cannot Receive a Fax/Cannot Receive a Color Fax
- Fax Setup Guide

Security / Other

- Set Up/Manage Security
- Searching Printer by IP Address or Host Name During Setup
- Failed to MP Drivers (Printer Driver) Installation (Windows)
- Updating MP Drivers (Printer Driver) in Network Environment (Windows)
- Perform Replace Ink in Print Head
- Refilling Ink Tanks

Questions not Listed Above

Error

- Cannot Use Previous Applications

Network

- Switching Printer's Connection to Network or Devices
- Network Key (Password) Unknown
- Cannot Remember Printer's Password
- Printer Cannot Be Used After Replacing Wireless Router or Changed Router Settings
- Message Appears on Computer During Setup
- Checking Network Information of Printer
- Restoring Printer's LAN Settings to Defaults
- USB Connection Problems
- Updating Printer Firmware

Printing

- Cannot Print Using AirPrint
- Printing (Copying) Stops
- Printer Does Not Pick Up or Feed the Paper/"No Paper" Error
- Automatic 2-sided Printing Problems
- Paper Does Not Feed from Paper Source Specified in Printer Driver (Windows)

Scan

- Scanning Problems(macOS)
- Scan Results Are Unsatisfactory(Windows)
- Scan Results Are Unsatisfactory(macOS)

Fax

- Cannot Dial
- Telephone Disconnects During a Call

Security / Other

- Printer Does Not Turn On
- Maintenance
- Printer Turns Off Unexpectedly or Repeatedly

➡ Wrong Language Appears in LCD

Operation Problems

Network FAQ

Here are frequently asked questions on network. Select a connection method you are using, or you want to use.

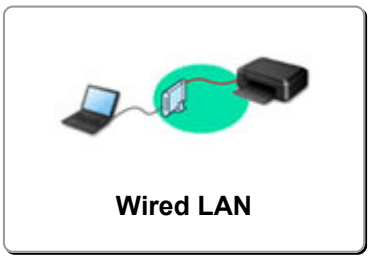

Wi-Fi

Cannot Find Printer

- Cannot Find Printer on Network(Windows/macOS)
- Cannot Proceed Beyond Printer Connection Screen (Cannot Find Printer Connected via USB)
- Searching Printer by IP Address or Host Name During Setup
- Detect Same Printer Name
- Switching Printer's Connection to Network or Devices

Cannot Print or Connect

- Solve Network Troubles with The Printer's Diagnostic Functions
- Printer Cannot Be Used After Replacing Wireless Router or Changed Router Settings
- Connecting Printer and Wireless Router Using Easy Wireless (Easy WL) Connect
- Cannot Connect Smartphone/Tablet to Wireless Router
- WPS (Router Button) Connection
- Switching Printer's Connection to Network or Devices
- Cannot Find Printer on Network(Windows/macOS)

LAN Setting Tips/Changing LAN Settings

- Network Key (Password) Unknown
- Cannot Remember Printer's Password
- Checking Network Information of Printer
- Restoring Printer's LAN Settings to Defaults
- Checking Wireless Router SSID/Key
- Checking Wireless Router Network Name (SSID) for Smartphone/Tablet
- Privacy Separator/SSID Separator/Network Separation Function
- Default Network Settings
- Switching Printer's Connection to Network or Devices
- Printing Network Settings
- Checking Status Code

Printing (Scanning) from Smartphone/Tablet

- Connecting Printer and Wireless Router Using Easy Wireless (Easy WL) Connect
- Cannot Connect Smartphone/Tablet to Wireless Router
- Checking Wireless Router Network Name (SSID) for Smartphone/Tablet

- Setting Up Using Smartphone/Tablet
- Cannot Print (Scan) from Smartphone/Tablet
- Downloading Canon PRINT

Problems while Using Printer

- Message Appears on Computer During Setup
- Cannot Find Printer on Network(Windows/macOS)

Wireless Direct

Cannot Print or Connect

- Solve Network Troubles with The Printer's Diagnostic Functions
- Cannot Find Printer on Network(Windows/macOS)

LAN Setting Tips/Changing LAN Settings

- Network Key (Password) Unknown
- Cannot Remember Printer's Password
- Checking Network Information of Printer
- Restoring Printer's LAN Settings to Defaults
- Default Network Settings
- Printing Network Settings
- Switching Printer's Connection to Network or Devices
- Checking Status Code

Printing (Scanning) from Smartphone/Tablet

- Cannot Print (Scan) from Smartphone/Tablet
- Downloading Canon PRINT

Problems while Using Printer

- Message Appears on Computer During Setup
- Cannot Find Printer on Network(Windows/macOS)

Wired LAN

Cannot Find Printer

- Searching Printer by IP Address or Host Name During Setup
- Cannot Find Printer on Network(Windows/macOS)
- Detect Same Printer Name

Cannot Print or Connect

- Solve Network Troubles with The Printer's Diagnostic Functions
- Cannot Find Printer on Network(Windows/macOS)

LAN Setting Tips/Changing LAN Settings

- Cannot Remember Printer's Password
- Checking Network Information of Printer
- Restoring Printer's LAN Settings to Defaults
- Default Network Settings
- Switching Printer's Connection to Network or Devices

- Printing Network Settings
- Checking Status Code

Problems while Using Printer

- Message Appears on Computer During Setup
- Cannot Find Printer on Network(Windows/macOS)

Network Communication Problems

- Cannot Find Printer on Network (Windows/macOS)
- Wireless Router Problems
- Printer Settings/Smartphone/Tablet Troubles for Network

Cannot Find Printer on Network (Windows/macOS)

- Cannot Find Printer on Network
- Cannot Proceed Beyond Printer Connection Screen (Cannot Find Printer Connected via USB)
- Searching Printer by IP Address or Host Name During Setup

Cannot Find Printer on Network

In the following cases, set up the printer again.

- When you buy a new computer or wireless router
- When you change the settings on your wireless router
- When the connection method (Wi-Fi / USB) of the printer is changed

For more on the setup procedure:

➡ Set Up

Important

- When you forget the administrator password of the printer, contact your nearest Canon service center.

In Other Cases Than Above:

If the printer suddenly stops working, even though you have not changed the settings of the device or network to which it is connected, or if you cannot find the printer during the setup process, check and solve the problem, using Wi-Fi Connection Assistant. After the condition improves, redo the setup of the printer.

Wi-Fi Connection Assistant is a powerful solution tool for network problems.

Step 1 Check Basic Items for Network.

Step 2 Solve Problems, Using Wi-Fi Connection Assistant.

Step 3 If the Solution Tool Does Not Solve the Problem.

Step 1 : Check Basic Items for Network.

Check 1 Check power status.

Check your printer and the network device (wireless router, etc.) are turned on.

If you are in the process of setting up, interrupt it and check if the wireless router (modem) is turned on and then check if the printer is turned on.

1. Check if network device such as router is turned on.

   If network devices are not turned on, turn on the power. If the network devices are on, turn them off and on again.

   It may take a while for the network device to become ready for use once they are turned on.

Proceed once the network device such as router is ready for use.

2. Check if printer is turned on.

   If printer is not turned on, turn on the power. If the printer is on, turn it off and on again.

Proceed once you complete checking the power status above.

Check 2 Check PC network connection.

If your computer and network devices (wireless router, etc.) are fully configured, your computer is ready to connect to the network.

1. Check the settings of the network device (wireless router, etc.).

   Connect to the Internet and see if you can browse any web page. If you cannot view web pages on your computer, check wireless router network connection settings, such as IP address filtering, MAC address filtering, and DHCP function.

   To check the network name (SSID) of the wireless router the printer is connected to, print the network settings.

   ➡ Printing Network Settings

   Note

   - Depending on the wireless router, note that different network name (SSID) is assigned for a bandwidth (2.4 GHz or 5 GHz) or its usage (for PC or game machine), using alphanumeric characters at the end of network name (SSID).
   - For more on checking the settings of the wireless router, refer to the instruction manual supplied with the wireless router or contact the manufacturer.

   If you use an encryption key, specify it for the network name (SSID) you are using. For details, see Setting an Encryption Key.

2. Check PC network connection.

   For the procedures, refer to the instruction manual supplied with the computer, or contact the manufacturer.

Once you complete setting up the wireless router and your computer, configure the settings on your computer in order to view web pages, using the information of the wireless router.

Proceed once you complete checking the network connection above.

Check 3 Check printer's network settings.

➡ For Wi-Fi

➡ For Wired LAN

For Wi-Fi

Make sure the icon is displayed on the lower left of the touch screen.

If or icon is displayed.

or icon indicates that the wireless router and the printer are not connected. Check the setting of printer. Reconsider the location of the wireless router and the printer in the next check.

If icon is displayed.

"Easy wireless connect" is waiting for setup. Connect a device to the printer with the application on computer, smartphone or tablet.

If or icon is displayed.

The printer is not set to use Wi-Fi.

Select (**Setup**) on **HOME** screen > **Printer settings** > **LAN settings** > **Wi-Fi** in this order, and select **Enable** for **Enable/disable Wi-Fi**.

For Wired LAN

1. Check the power and LAN cable.

   When the printer cannot be found on the setup screen, using LAN connection setup, make sure that all the network devices are connected to the router and the hub via LAN cables and that all the devices are turned on.

   - **If LAN cable is not connected:**

     Connect the router, hub, computer and printer via LAN cables.

     Make sure the printer is turned on.

     ➡ Turning the Printer On and Off

     Make sure the printer, the router and the hub are turned on.

   - **If LAN cable is connected, and printer and network device are off:**

     Turn on printer and network device.

   - **If LAN cable is connected, and printer and network device are on:**

     Turn them off and on again.

     Note

     - Some devices require a couple of minutes after being turned on to become ready for use. Wait until all devices are ready before proceeding.

2. Check printer's Wired LAN settings.

Make sure icon is displayed on the lower left of the touch screen when (**HOME**) icon is selected.

- **If icon is not displayed:**

  The printer is not set to use wired communication. Enable Wired LAN from the printer settings.

  Select (**Setup**) on **HOME** screen, select **Printer settings** > **LAN settings** > **Wired LAN** > **Enable/disable Wired LAN** in this order and select **Enable**.

Check 4 Check location of wireless router.

Make sure the printer is not placed too far away from the wireless router.

The printer can be up 50 m (164 ft.) from the wireless router indoors if unobstructed. Make sure the printer is close enough to the wireless router to be used.

Place the printer and wireless router where there are no obstacles between them. Wireless communication between different rooms or floors is generally poor. Wireless communication can be impeded by building materials containing metal or concrete. If the printer cannot communicate with the computer over a Wi-Fi due to a wall, place the printer and the computer in the same room.

In addition, if a device like a microwave oven that emits radio waves of the same frequency bandwidth as a wireless router is nearby, it may cause interference. Place the wireless router as far away from interference sources as possible.

Step 2 : Solve Problems, Using Wi-Fi Connection Assistant.

Diagnose and repair the network connections using Wi-Fi Connection Assistant.

Download Wi-Fi Connection Assistant from the below page, and install it on your computer.

➡ Checking Printer Connection Status Using Wi-Fi Connection Assistant

Refer to below in regard to starting up Wi-Fi Connection Assistant.

- **For Windows:**

  ➡ Starting Up Wi-Fi Connection Assistant

- **For macOS:**

  ➡ Starting Up Wi-Fi Connection Assistant

Step 3 : If the Solution Tool Does Not Solve the Problem.

Check 1 Make sure security software's firewall is off.

If your security software's firewall is on, a message may appear warning you that Canon software is attempting to access the network. If this warning message appears, set security software to always allow access.

If you are using any programs that switch between network environments, check their settings.

Check 2 If printer is connected to AirPort Base Station via Wi-Fi, make sure you use alphanumeric characters for network name (SSID). (macOS)

If your network name (SSID) contains characters other than single-byte alphanumeric characters, the connection is not established properly. Change the network (SSID) to use only single-byte alphanumeric characters.

Check 3 Solve network troubles with the printer's diagnostic functions.

See below.

➡ Solve Network Troubles with The Printer's Diagnostic Functions

Related Topics

➡ Network Communication Problems

Cannot Proceed Beyond Printer Connection Screen (Cannot Find Printer Connected via USB)

If you cannot proceed beyond the **Printer Connection** screen, check the following.

Check 1 Make sure USB cable is securely plugged in to printer and computer.

Connect the printer and the computer using a USB cable as the illustration below. The USB port is located at the back of the printer.

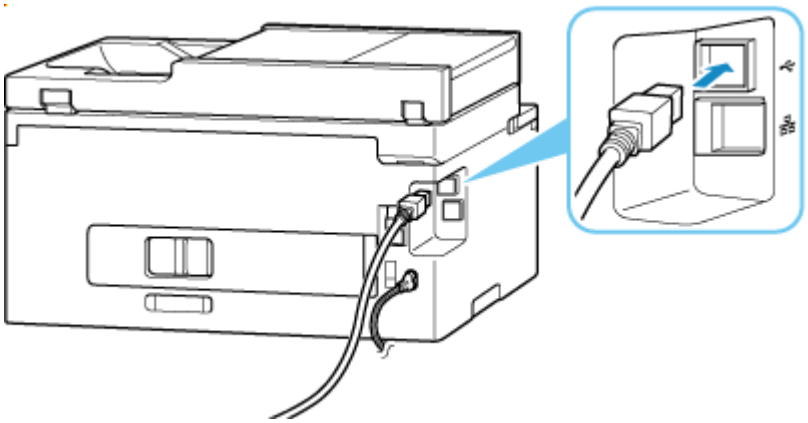

Important

- Check the orientation of the "Type-B" connector and connect to the printer. For details, refer to the instruction manual supplied with the USB cable.

Check 2 Follow procedure below to connect printer and computer again.

1. Unplug USB cable from printer and computer and connect it again.
2. Make sure no printer operation is in progress and turn off.
3. Turn on printer.

Check 3 Follow the steps below to install MP Drivers (Printer Driver) again.

1. Download the latest MP Drivers (Printer Driver).
2. Turn off printer.
3. Restart computer.

After restarting, install the latest MP Drivers (Printer Driver) downloaded in step 1.

Important

- When installing the MP Drivers (Printer Driver), make sure you select the correct printer name.
- For Windows:

  To restart your computer, choose **Restart** instead of **Shut down**.

Wireless Router Problems

- Network Key (Password) Unknown
- Checking Wireless Router SSID/Key
- Printer Cannot Be Used After Replacing Wireless Router or Changed Router Settings
- WPS (Router Button) Connection
- Privacy Separator/SSID Separator/Network Separation Function

Network Key (Password) Unknown

Diagnose and repair the network connections using Wi-Fi Connection Assistant.

Download Wi-Fi Connection Assistant from the below page, and install it on your computer.

➡ Checking Printer Connection Status Using Wi-Fi Connection Assistant

Refer to below in regard to starting up Wi-Fi Connection Assistant.

- **For Windows:**

  ➡ Starting Up Wi-Fi Connection Assistant

- **For macOS:**

  ➡ Starting Up Wi-Fi Connection Assistant

If the problem persists after diagnosis and repair with Wi-Fi Connection Assistant, check the following items.

➡ WPA/WPA2/WPA3 Key Set for Wireless Router Unknown, Cannot Connect
➡ Setting an Encryption Key

Q WPA/WPA2/WPA3 Key Set for wireless router Unknown, Cannot Connect

A

Check the wireless router settings. For more on setting up a wireless router, see the instruction manual provided with the wireless router or contact its manufacturer. Make sure your computer can communicate with the wireless router.

Q Setting an Encryption Key

A

Select the encryption containing WPA2.

Note

- The factory default of wireless router supporting WPA3 may be set to WPA3.

Make sure your computer can communicate with the wireless router using the settings you have selected. For more on setting up a wireless router, see the instruction manual provided with the wireless router or contact its manufacturer.

- **Using WPA2/WPA3 (Windows)**

  The authentication method, Wi-Fi password, and dynamic encryption type must be identical among the wireless router, the printer, and your computer.

Enter the Wi-Fi password configured on the wireless router.

Either TKIP (basic encryption) or AES (secure encryption) is selected automatically as the dynamic encryption method.

For details, see If WPA/WPA2/WPA3 Details Screen Appears.

Note

- This printer supports the following.
  - WPA-PSK (WPA-Personal)
  - WPA2-PSK (WPA2-Personal)
  - WPA3-SAE (WPA3-Personal)
- Some printers support IEEE802.1X/EAP (WPA/WPA2/WPA3 Enterprise). To configure IEEE802.1X/EAP (WPA/WPA2/WPA3 Enterprise), you also need to configure the authentication (Radius) server.

  Contact the network administrator for more information.
- This web page contains information about several models. Depending on the specifications of the printer you are using, some of the features described (connection, scanner/copy and etc.) may not apply.

  For details about the functions of your printer, see Product Specifications.

Printer Cannot Be Used After Replacing Wireless Router or Changed Router Settings

When wireless router is replaced or router settings are changed, the network settings of your computer, smartphone/tablet or printer must be reconfigured according to the new wireless router.

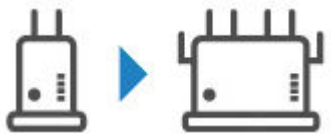

Check 1 Check if your computer or smartphone/tablet can be connected to Internet through the new wireless router.

If your computer or smartphone/tablet cannot be connected to Internet, check if the wireless router setup is completed and configure the settings on the computer or smartphone/tablet to connect to the wireless router.

Check 2 Resetup printer network.

Refer to Setup Guide to setup.

Note

- Wi-Fi Connection Assistant allows you to diagnose and repair the network status.

  Select the link below to download Wi-Fi Connection Assistant and install it.

  ➡ Checking Printer Connection Status Using Wi-Fi Connection Assistant

  Refer to below in regard to starting up Wi-Fi Connection Assistant.

  – For Windows:

    ➡ Starting Up Wi-Fi Connection Assistant

  – For macOS:

    ➡ Starting Up Wi-Fi Connection Assistant

If this does not solve the problem, see below.

➡ Cannot Communicate with Printer After Enabling MAC/IP Address Filtering or Encryption Key on Wireless Router

➡ With Encryption On, Cannot Communicate with Printer After Changing Encryption Type at Wireless Router

➡ Privacy Separator/SSID Separator/Network Separation Function

Q Cannot Communicate with Printer After Enabling MAC/IP Address Filtering or Encryption Key on wireless router

A

Check 1 Check wireless router setting.

For more on setting up a wireless router, see the instruction manual provided with the wireless router or contact its manufacturer. Make sure the computer and the wireless router can communicate with each other under this setting.

Check 2 If filtering MAC addresses or IP addresses at wireless router, check that MAC addresses or IP addresses for computer, network device, and printer are registered.

Check 3 If using WPA/WPA2/WPA3 key or a password, make sure encryption key for computer, network device, and printer matches key set for wireless router.

The length or format of the Wi-Fi password and authentication method must be identical among the wireless router, the printer, and your computer.

For details, see Setting an Encryption Key.

Note

- Some printers support IEEE802.1X/EAP (WPA/WPA2/WPA3 Enterprise). To configure IEEE802.1X/EAP (WPA/WPA2/WPA3 Enterprise), you also need to configure the authentication (Radius) server.

  Contact the network administrator for more information.

- This web page contains information about several models. Depending on the specifications of the printer you are using, some of the features described (connection, scanner/copy and etc.) may not apply.

  For details about the functions of your printer, see Product Specifications.

Q With Encryption On, Cannot Communicate with Printer After Changing Encryption Type at wireless router

A

If the printer cannot communicate with the computer after you change the encryption type for the wireless router, make sure the encryption type and passkey or password for the computer matches that of the wireless router.

➡ Cannot Communicate with Printer After Enabling MAC/IP Address Filtering or Encryption Key on Wireless Router

Printer Settings/Smartphone/Tablet Troubles for Network

- Solve Network Troubles with The Printer's Diagnostic Functions
- Checking Network Information of Printer
- Checking Status Code
- Printing Network Settings
- Restoring Printer's LAN Settings to Defaults
- Default Network Settings
- Connecting with Wireless Direct

Solve Network Troubles with The Printer's Diagnostic Functions

- If the printer and wireless router are connected or the printer and computer are connected by USB cable but you cannot print:
  - ➡ Change to Offline (Windows)
- In other cases than above:
  - ➡ Cannot Find Printer on Network/Cannot Print
  - ➡ Cannot Connect to Printer through Wireless Direct

Q Cannot Find Printer on Network/Cannot Print

A

Printing Out Network Settings Information:

Note

- Wi-Fi indicates descriptions related to Wi-Fi.

  LAN indicates descriptions related to wired LAN.

Follow the procedure below to print out the network settings information.

Step 1 Check that printer and wireless router are turned on.

Turn the wireless router back on.

Wait about five minutes and then turn the printer back on.

Step 2 Check your devices (e.g. computer/smartphone/tablet) are connected to Internet.

Make sure that devices and the wireless router are connected to via Wi-Fi or Wired LAN, and that the Internet can be used without problems.

Step 3 Wi-Fi Make sure the printer's Wi-Fi setting is enabled and the icon is displayed.

LAN Make sure the printer's Wired LAN setting is enabled and the icon is displayed.

Step 4 Wi-Fi Move the printer and device (computer/smartphone/tablet) closer to the wireless router.

Wireless communication quality deteriorates if the printer or devices are too far from the wireless router. Move the printer and device closer to the wireless router.

LAN Make sure the LAN cable is inserted.

Try reconnecting the LAN cable to the printer and wireless router.

Step 5 Print the network settings.

Print out the network settings information on your printer.

➡ Printing Network Settings

Note

- For troubleshooting IEEE802.1X/EAP (WPA/WPA2/WPA3 Enterprise), refer to the following.

  ➡ Setting Up IEEE802.1X/EAP

Checking Printed Network Settings Information:

From the printed network settings information, check the entries in item "2-2"

C-0

Wi-Fi LAN It is connected correctly. If, nevertheless, the printer is not found on the network or printing is not possible, check the following items.

Note

- If codes other than "C-0" are displayed at the same time in the item "2-2" see also the correspondence of the other codes.

Check 1 Wi-Fi LAN Check that security software's firewall is off.

A message may appear warning you that Canon software is attempting to access the network. If this warning message appears, set the security software to always allow access.

Quit the security software and make sure that the printer is recognized and ready to use. If so, the cause is the firewall setting. Change the firewall settings so that the printer is recognized and ready to use. For details, contact the manufacturer of the security software.

If you are using any programs that switch between network environments, check their settings.

Check 2 Wi-Fi Does network name (SSID) of printer match network name (SSID) setting of wireless router that communicates?

Check the "3-2-6" item in the printed network settings information and the network name (SSID) of the wireless router you want to connect to. If they are not matched, check the SSID and password of the wireless router you want to connect to, and then setup manually.

Check 3 Wi-Fi Is privacy separator, SSID separator, or Network separation function enabled on wireless router?

If it is enabled, disable these functions before performing the setup. To check the settings of the wireless router, refer to the instruction manual provided with it or contact its manufacturer.

Check 4 Wi-Fi LAN Are MP Drivers (Printer Driver) installed? (Windows)

If you are using Windows and MP Drivers (Printer Driver) are not installed, install it.

➡ Set Up

C-1

Wi-Fi The printer's Wi-Fi setting is disabled. (You can also check if the Wi-Fi icon does not appear on the printer's screen.)

Enable the Wi-Fi setting in the printer's settings screen.

LAN Wired LAN setting is disabled. (The icon representing the Wired LAN is not displayed on the touch screen.)

Enable the Wired LAN setting from the operation panel.

C-2

LAN Wired LAN setting is disabled. Make sure the printer and wireless router are connected via LAN cable.

If the LAN cable is disconnected, connect it correctly.

If your LAN cable is connected to the WAN port of the wireless router, connect it to the LAN port of the wireless router.

C-3

Wi-Fi LAN No IP address is assigned. (You can also check that the item "3-2-12" in the printed network settings information is blank.)

Check the following items.

Check 1 Wi-Fi LAN Is printer set to obtain an IP address automatically, or is wireless router requesting manual addressing?

Refer to the wireless router's manual to enable DHCP (auto-acquisition) settings on the wireless router or to set a valid IP address on the printer.

Check 2 Wi-Fi LAN When you set printer's IP address manually, correct IP address may not be set.

Check the network name (SSID) and the password of the wireless router you want to connect to, the IP address applicable range, and then enter the appropriate IP address on the printer side. If you are unsure, set the printer's IP address to automatic (DHCP).

C-5

Wi-Fi Unable to connect to the specified network. Check the following items.

Check 1 Wi-Fi Check status of printer and network device (e.g. wireless router) and your computer/smartphone/tablet.

Communication with a wireless router must be tuned to either the 2.4 GHz or 5 GHz frequency band. The network name (SSID) of the 2.4 GHz frequency band and the network name (SSID) of the 5 GHz frequency band cannot be used in combination. Depending on the wireless router, note that different network name (SSID) is assigned for a bandwidth (2.4 GHz or 5 GHz) or its usage (for PC or game machine), using alphanumeric characters at the end of network name (SSID).

Check the network name (SSID) set for the printer, and match it with the network name (SSID) of the correct frequency band of the wireless router.

Check 2 Wi-Fi Password on your wireless router may not match password you entered.

Passwords are case sensitive.

Enter the password correctly.

Check 3 Wi-Fi Monitor signal status and move printer and wireless router as necessary.

- Place the printer and wireless router where there are no obstacles between them. Wireless communication between different rooms or floors is generally poor.
- Wireless communication can be impeded by building materials containing metal or concrete. If the printer cannot communicate with the computer over a Wi-Fi due to a wall, place the printer and the computer in the same room.
- After changing the installation location, print out the network settings information again and check the status of the signal. Compare with the value in section "3-2-1" in the printed network settings information to determine the installation location.

Check 4 Wi-Fi Check wireless channel number of Wi-Fi you are using on computer.

Make sure that the wireless channel number on the wireless router is included in the wireless channel number you checked. If the wireless channel number set for the wireless router is not included, change the wireless channel number of the wireless router.

Check 5 Wi-Fi In case of Wi-Fi connection, check if computer that can be accessed by wireless router is restricted.

The wireless router settings may be limiting the number of devices that can be connected at the same time. Remove or relax the restrictions.

To check the settings of the wireless router, refer to the instruction manual provided with it or contact its manufacturer.

Note

- To check the MAC address or IP address of your computer, see Checking Computer IP Address or MAC Address.

Check 6 Wi-Fi If problem occurs only when wireless router is in energy-saving mode, turn off energy-saving mode of wireless router.

If the problem seems to occur suddenly, it may be resolved by updating the wireless router firmware (e.g. update interval of a key, problems of DHCP update interval, etc.). For details, refer to the wireless router's instruction manual.

Check 7 Wi-Fi If printer is connected to AirPort Base Station via LAN, make sure you use alphanumeric characters for network name (SSID). (macOS)

If your network name (SSID) contains characters other than single-byte alphanumeric characters, the connection is not established properly. Change the network (SSID) of the printer to use only single-byte alphanumeric characters.

C-4

Wi-Fi LAN No default gateway is set.

When you set the IP address of the printer manually, enter a valid default gateway IP address. If you don't know the default gateway, set the IP address to automatic.

C-7

Wi-Fi There may be a problem with the signal.

Check the following items.

Check Wi-Fi Monitor signal status and move printer and wireless router as necessary.

- Place the printer and wireless router where there are no obstacles between them. Wireless communication between different rooms or floors is generally poor.
- Wireless communication can be impeded by building materials containing metal or concrete. If the printer cannot communicate with the computer over a Wi-Fi due to a wall, place the printer and the computer in the same room.
- After changing the installation location, print out the network settings information again and check the status of the signal. Compare with the value in section "3-2-1" in the printed network settings information and place the printer in the location with a higher value.

Note

- In some cases, "C-7" and "C-9" are displayed at the same time. In that case, refer to both items.

C-8

Wi-Fi Too many clients are connected.

Wireless Direct does not allow more than 5 devices to be connected.

If you want to connect additional devices to the printer, unplug any devices that are not in use before adding them.

C-9

Wi-Fi The noise level is high and does not differ from the signal level due to various devices other than the printer.

- If devices (microwave oven, external hard disk drive, and other USB 3.0 devices) that emit radio waves of the same frequency bandwidth as a wireless router is nearby, it may cause interference. Place the printer and the wireless router as far away from interference sources as possible.
- After you change the location of the printer, check the signal quality. Compare the value of "3-2-2" in the network settings information and place the printer in the location with a higher value.

Note

- In some cases, "C-7" and "C-9" are displayed at the same time. In that case, refer to both items.

C-10

Wi-Fi No IP address is assigned by the wireless router.

Check the following items.

Check 1 Wi-Fi Password on your wireless router may not match password you entered.

Passwords are case sensitive.

Enter the password correctly.

Check 2 Wi-Fi Set up printer again and reconnect to Wi-Fi.

Check 3 Wi-Fi Check DHCP on wireless router. If DHCP is off, set it on.

For details, refer to the wireless router's instruction manual.

C-11

Wi-Fi The network name (SSID) remains the default value (The network name (SSID) has not been set). Check the network name (SSID) of the wireless router.

Verify the network name (SSID) and password of the wireless router you want to connect to, and then set it up manually.

Note

- Wi-Fi Connection Assistant allows you to diagnose and repair the network status.

  Select the link below to download Wi-Fi Connection Assistant and install it.

  ➡ Checking Printer Connection Status Using Wi-Fi Connection Assistant

  Refer to below in regard to starting up Wi-Fi Connection Assistant.

  – **For Windows:**

    ➡ Starting Up Wi-Fi Connection Assistant

– **For macOS:**

➡ Starting Up Wi-Fi Connection Assistant

Q Cannot Communicate with Printer while It Is in Wireless Direct

A

Check the following items

Check 1 Check power status of printer and other devices (e.g. computer/smartphone/tablet).

Turn on the printer or devices.

If the power is already turned on, cycle the power switch.

Check 2 Check settings of your device (e.g. computer/smartphone/tablet).

Make sure Wi-Fi is enabled on your device.

For details, refer to the device's instruction manual.

Check 3 Print out network settings information.

See "Step 1" to "Step 5" in Cannot Find Printer on Network/Cannot Printing.

In the printed network settings information, check if the item "2-2" is not "C-8". If this is the case, the number of connected printers is too many.

Wireless Direct does not allow more than 5 devices to be connected.

When you want to connect additional devices, disconnect any devices that are not in use before adding them.

Check 4 Check that printer is selected as connection for various devices (e.g. computer/smartphone/tablet).

Select the network name (SSID) for Wireless Direct specified for the printer as the connection destination for devices.

Check the destination on your device.

For details, refer to your device's instruction manual or visit the manufacturer's website.

To check the network name (SSID) for Wireless Direct specified for the printer, display it using the operation panel of the printer or print out the network settings information of the printer.

- Display on the operation panel of the printer.

  ➡ LAN settings

- Print the network settings.

  ➡ Printing Network Settings

Check 5 Check that Wireless Direct password set for printer is entered correctly.

To check the password specified for the printer, display it using the operation panel of the printer or print out the network settings information of the printer.

- Display on the operation panel of the printer.

  ➡ LAN settings

- Print the network settings.

  ➡ Printing Network Settings

Check 6 Check that printer is not placed too far away from device.

If the distance between the printer and the device is too far, wireless communication becomes poor. Place the printer and the device close to each other.

Note

- Wireless Direct is set to disabled when you connect to and use an EAP router. Also, if you set Wireless Direct to enable in this case, the wireless LAN (Wi-Fi) will be set to Disable.
- When using IEEE802.1X/EAP (WPA/WPA2/WPA3 Enterprise), enable the **Administrator mode** so that the Wireless Direct settings cannot be changed.

Checking Network Information of Printer

- Checking Printer IP Address or MAC Address
- Checking Computer IP Address or MAC Address
- Checking Communication Between the Computer, the Printer, and the Wireless Router
- Checking Network Setting Information

Q Checking Printer IP Address or MAC Address

A

To check the printer's IP Address or MAC Address, print out the network settings information or use the operation panel to display it.

- Display on the operation panel.
  - LAN settings
- Print the network settings.
  - Printing Network Settings

For Windows, you can check the network setting information on the computer screen.

- Canon Wi-Fi Connection Assistant Screen

Q Checking Computer IP Address or MAC Address

A

To check the IP Address or MAC Address of your computer, follow the instructions below.

- **For Windows:**

  1. Select **Command Prompt** from **Start**.
  2. Enter "ipconfig/all" and press **Enter**.

     The IP Address and MAC Address of your computer appear. If your computer is not connected to a network, the IP Address does not appear.

- **For macOS:**

  1. Select **System Settings** from Apple menu, and then click **Network**.
  2. Make sure network interface used by computer is selected.

     Make sure **Wi-Fi** is **Connected** when connecting via Wi-Fi or **Ethernet** is **Connected** for Wired LAN connection and click.

3. Click **Details** to check the IP Address.

   The IP Address of your computer appears. To check the MAC Address, click **Hardware**.

Q Checking Communication Between the Computer, the Printer, and the wireless router

A

Perform a ping test to check if communication is taking place.

- **For Windows:**

  1. Select **Command Prompt** from **Start**.

  2. Type "ping XXX.XXX.XXX.XXX" and press **Enter**.

     "XXX.XXX.XXX.XXX" is the IP Address of the target device.

     If communication is taking place, a message like the one shown below appears.

     Reply from XXX.XXX.XXX.XXX: bytes=32 time=10ms TTL=255

     If **Request timed out** appears, communication is not taking place.

- **For macOS:**

  1. Start **Terminal** as shown below.

     Select **Computer** from **Go** menu of Finder, double-click **Macintosh HD** > **Applications** > **Utilities** > **Terminal**.

  2. Type "ping -c3 XXX.XXX.XXX.XXX" and press **Enter**.

     "XXX.XXX.XXX.XXX" is the IP Address of the target device.

     If communication is taking place, a message like the one shown below appears.

     64 bytes from XXX.XXX.XXX.XXX: icmp_seq=0 ttl=64 time=3.394 ms

     64 bytes from XXX.XXX.XXX.XXX: icmp_seq=1 ttl=64 time=1.786 ms

     64 bytes from XXX.XXX.XXX.XXX: icmp_seq=2 ttl=64 time=1.739 ms

     --- XXX.XXX.XXX.XXX ping statistics ---

     3 packets transmitted, 3 packets received, 0% packet loss

     If the following message is displayed, communication is not working properly.

     PING XXX.XXX.XXX.XXX (XXX.XXX.XXX.XXX) : 56 data bytes

     ---XXX.XXX.XXX.XXX ping statistics ---

     3 packets transmitted, 0 packets received, 100% packet loss

Checking Network Setting Information

To check the printer's network settings information, display it using the operation panel of the printer or print it out.

- Display on the operation panel.

  ➡ LAN settings

- Print the network settings.

  ➡ Printing Network Settings

Printing Network Settings

Use the operation panel to print the printer's current network settings.

Important

- The network settings printout contains important information about your network. Handle it with care.

1. Check that printer is turned on.
2. Load five or more sheets of A4 or Letter-sized plain paper.
3. Select (**Setup**) on **HOME** screen.

   Note

   - If **User management settings** is enabled, the user selection screen is displayed before the **HOME** screen is displayed.

4. Select **Printer settings**.
5. Select **LAN settings**.
6. Select **Print details**.
7. Check message and select **Yes**.
8. When the confirmation screen for printing passwords appears, select **ON** or **OFF**.

   The printer starts printing the network setting information.

The following information on the printer's network setting is printed out. (Some setting values are not displayed depending on the printer settings.)

Item Number	Item	Description	Setting
1	Product Information	Product information	–
1-1	Product Name	Product name	XXXXXXXX
1-2	ROM Version	ROM version	XXXXXXXX
1-3	Serial Number	Serial number	XXXXXXXX

2	Network Diagnostics	Network diagnostics	–
2-1	Diagnostic Result	Diagnostic result	XXXXXXXX
2-2	Result Codes	Result codes	XXXXXXXX
2-3	Result Code Details	Result code details	See Solve Network Troubles with The Printer's Diagnostic Functions to check details on the diagnostic result and result codes.
3	Wireless LAN	Wireless LAN	Enable/Disable
3-2	Infrastructure	Infrastructure	Enable/Disable
3-2-1	Signal Strength	Signal strength	0 to 100 [%]
3-2-2	Link Quality	Link quality	0 to 100 [%]
3-2-3	Frequency	Frequency	2.4/5 [GHz]
3-2-4	MAC Address	MAC address	XX:XX:XX:XX:XX:XX
3-2-5	Connection	Connection status	Active/Inactive
3-2-6	SSID	SSID	Wireless LAN network name (SSID)
3-2-7	Channel	Channel	XXX (1 to 13, 36, 40, 44, 48, 52, 56, 60, 64, 100, 104, 108, 112, 116, 120, 124, 128, 132, 136, 140, 149, 153, 157, 161, 165)
3-2-8	Encryption	Encryption method	none/TKIP/AES
3-2-10	Authentication	Authentication method	none/auto/open/shared/WPA-PSK/WPA2-PSK/WPA3-SAE/WPA-EAP/WPA2-EAP/WPA3-EAP
3-2-11	TCP/IPv4	TCP/IPv4	Enable
3-2-12	IP Address	IP address	XXX.XXX.XXX.XXX
3-2-13	Subnet Mask	Subnet mask	XXX.XXX.XXX.XXX
3-2-14	Default Gateway	Default gateway	XXX.XXX.XXX.XXX
3-2-15	TCP/IPv6	TCP/IPv6	Enable/Disable
3-2-16	Link Local Address	Link local address	XXXX:XXXX:XXXX:XXXX XXXX:XXXX:XXXX:XXXX
3-2-17	Link Local Prefix Length	Link local prefix length	XXX
3-2-18	Stateless Address1	Stateless address 1	XXXX:XXXX:XXXX:XXXX XXXX:XXXX:XXXX:XXXX
3-2-19	Stateless Prefix Length1	Stateless prefix length 1	XXX

3-2-20	Stateless Address2	Stateless address 2	XXXX:XXXX:XXXX:XXXX XXXX:XXXX:XXXX:XXXX
3-2-21	Stateless Prefix Length2	Stateless prefix length 2	XXX
3-2-22	Stateless Address3	Stateless address 3	XXXX:XXXX:XXXX:XXXX XXXX:XXXX:XXXX:XXXX
3-2-23	Stateless Prefix Length3	Stateless prefix length 3	XXX
3-2-24	Stateless Address4	Stateless address 4	XXXX:XXXX:XXXX:XXXX XXXX:XXXX:XXXX:XXXX
3-2-25	Stateless Prefix Length4	Stateless prefix length 4	XXX
3-2-26	Default Gateway1	Default gateway 1	XXXX:XXXX:XXXX:XXXX XXXX:XXXX:XXXX:XXXX
3-2-27	Default Gateway2	Default gateway 2	XXXX:XXXX:XXXX:XXXX XXXX:XXXX:XXXX:XXXX
3-2-28	Default Gateway3	Default gateway 3	XXXX:XXXX:XXXX:XXXX XXXX:XXXX:XXXX:XXXX
3-2-29	Default Gateway4	Default gateway 4	XXXX:XXXX:XXXX:XXXX XXXX:XXXX:XXXX:XXXX
3-2-33	IPsec	IPsec setting	Active/Inactive
3-2-34	Security Protocol	Security method	ESP/ESP & AH/AH/Blank (Not selected)
3-2-35	Wireless LAN DRX	Discontinuous reception (wireless LAN)	Enable/Disable
3-3	Wireless Direct/Access Point Mode	Operation mode for Wireless Direct	Enable/Disable
3-3-1	MAC Address	MAC address	XX:XX:XX:XX:XX:XX
3-3-2	Connection	Connection status	Active/Inactive
3-3-3	SSID	SSID	Wireless Direct network name (SSID)
3-3-4	Password	Password	Wireless Direct password
3-3-5	Channel	Channel	3,6,36,40
3-3-6	Encryption	Encryption method	AES
3-3-7	Authentication	Authentication method	WPA2-PSK

3-3-8	TCP/IPv4	TCP/IPv4	Enable
3-3-9	IP Address	IP address	XXX.XXX.XXX.XXX
3-3-10	Subnet Mask	Subnet mask	XXX.XXX.XXX.XXX
3-3-11	Default Gateway	Default gateway	XXX.XXX.XXX.XXX
3-3-12	TCP/IPv6	TCP/IPv6	Enable/Disable
3-3-13	Link Local Address	Link local address	XXXX:XXXX:XXXX:XXXX XXXX:XXXX:XXXX:XXXX
3-3-14	Link Local Prefix Length	Link local prefix length	XXX
3-3-15	IPsec	IPsec setting	Active/Inactive
3-3-16	Security Protocol	Security method	ESP/ESP & AH/AH/Blank (Not selected)
3-3-17	Wireless LAN DRX	Discontinuous reception (wireless direct)	Disable
3-3-18	Frequency	Wireless Direct frequency	2.4/5 [GHz]
4	Wired LAN	Wired LAN	Enable/Disable
4-1	MAC Address	MAC address	XX:XX:XX:XX:XX:XX
4-2	Connection	Wired LAN status	Active/Inactive
4-3	TCP/IPv4	TCP/IPv4	Enable
4-4	IP Address	IP address	XXX.XXX.XXX.XXX
4-5	Subnet Mask	Subnet mask	XXX.XXX.XXX.XXX
4-6	Default Gateway	Default gateway	XXX.XXX.XXX.XXX
4-7	TCP/IPv6	TCP/IPv6	Enable/Disable
4-8	Link Local Address	Link local address	XXXX:XXXX:XXXX:XXXX XXXX:XXXX:XXXX:XXXX
4-9	Link Local Prefix Length	Link local prefix length	XXX
4-10	Stateless Address1	Stateless address 1	XXXX:XXXX:XXXX:XXXX XXXX:XXXX:XXXX:XXXX
4-11	Stateless Prefix Length1	Stateless prefix length 1	XXX
4-12	Stateless Address2	Stateless address 2	XXXX:XXXX:XXXX:XXXX

			XXXX:XXXX:XXXX:XXXX
4-13	Stateless Prefix Length2	Stateless prefix length 2	XXX
4-14	Stateless Address3	Stateless address 3	XXXX:XXXX:XXXX:XXXX XXXX:XXXX:XXXX:XXXX
4-15	Stateless Prefix Length3	Stateless prefix length 3	XXX
4-16	Stateless Address4	Stateless address 4	XXXX:XXXX:XXXX:XXXX XXXX:XXXX:XXXX:XXXX
4-17	Stateless Prefix Length4	Stateless prefix length 4	XXX
4-18	Default Gateway1	Default gateway 1	XXXX:XXXX:XXXX:XXXX XXXX:XXXX:XXXX:XXXX
4-19	Default Gateway2	Default gateway 2	XXXX:XXXX:XXXX:XXXX XXXX:XXXX:XXXX:XXXX
4-20	Default Gateway3	Default gateway 3	XXXX:XXXX:XXXX:XXXX XXXX:XXXX:XXXX:XXXX
4-21	Default Gateway4	Default gateway 4	XXXX:XXXX:XXXX:XXXX XXXX:XXXX:XXXX:XXXX
4-25	IPsec	IPsec setting	Active/Inactive
4-26	Security Protocol	Security method	ESP/ESP & AH/AH/Blank (Not selected)
4-27	Wired LAN DRX	Discontinuous reception (wired LAN)	Enable/Disable
5	Other Settings	Other settings	–
5-1	Printer Name	Printer name	Printer name
5-2	Wireless Direct Dev-Name	Device name for wireless direct	Device name for wireless direct
5-4	WSD Printing	WSD printing setting	Enable/Disable
5-5	WSD Timeout	Timeout	1/5/10/15/20 [min]
5-6	LPD Printing	LPD printing setting	Enable/Disable
5-7	RAW Printing	RAW printing setting	Enable/Disable
5-9	Bonjour	Bonjour setting	Enable/Disable
5-10	Bonjour Service Name	Bonjour service name	Bonjour service name

5-11	LLMNR	LLMNR setting	Enable/Disable
5-12	SNMP	SNMP setting	Enable/Disable
5-14	DNS Server	Obtain DNS server address automatically	Auto/Manual
5-15	Primary Server	Primary server address	XXX.XXX.XXX.XXX
5-16	Secondary Server	Secondary server address	XXX.XXX.XXX.XXX
5-17	Proxy Server	Proxy server setting	Enable/Disable
5-18	Proxy Address	Proxy address	XXXXXXXXXXXXXXXXXXXX
5-19	Proxy Port	Proxy port specification	1 to 65535
5-20	Cert. Fingerprt(SHA-1)	Certificate fingerprint(SHA-1)	xxxxxxxx xxxxxxxx xxxxxxxx xxxxxxxx xxxxxxxx
5-21	Cert. Fingerprt(SHA-256)	Certificate fingerprint(SHA-256)	xxxxxxxx xxxxxxxx xxxxxxxx xxxxxxxx xxxxxxxx xxxxxxxx xxxxxxxx xxxxxxxx
7	Web Services	Web Services	–
7-1	Unsent Usage Logs	Number of unsent usage logs	0 to 200
7-2	Usage Log Last Sent	Last date when usage log was sent	XXXXXXXX
7-3	Web Service Status	Registration status	Not set/Disabled/Registration pending/Registered
7-4	Log Transmission Status	Transmission result	Not activated/Processing/Server error/Connection error/Timeout error/Error/Awaiting server response/Active
9	Security policy	Security policy status	–
9-1	Security administrator password	Security administrator password	Enable/Disable
9-2	Interface	Interface function	–
9-2-1	Wi-Fi policy	Wireless connection policy	–
	Prohibit use of direct connection	Prohibit use of direct connection	Enable/Disable
	Prohibit use of wireless LAN (Wi-Fi)	Prohibit use of wireless LAN	Enable/Disable
9-2-2	USB policy	USB connection policy	–

	Prohibit use of USB connection	Prohibit use of USB device	Enable/Disable
	Prohibit use of external USB devices	Prohibit use as USB storage device	Enable/Disable
9-3	Network	Network function	–
9-3-1	Communication policy	Communication operational policy	–
	Always verify signatures for SMB/WebDAV server functions	Always verify signatures when using SMB/WebDAV server functions	Enable/Disable
	Always verify server certificate when using TLS	Always verify server certificate when using TLS	Enable/Disable
	Prohibit cleartext authentication for server functions	Prohibit cleartext authentication for server functions	Enable/Disable
	Prohibit use of SNMPv1	Prohibit use of SNMPv1	Enable/Disable
9-3-2	Port usage policy	Port Usage Policy	–
	Restrict LPD port	Restrict LPD port	Enable/Disable
	Restrict RAW port	Restrict RAW port	Enable/Disable
	Restrict FTP port	Restrict FTP port	Enable/Disable
	Restrict WSD port	Restrict WSD port	Enable/Disable
	Restrict BMLinkS port	Restrict BMLinkS port	Enable/Disable
	Restrict IPP port	Restrict IPP port	Enable/Disable
	Restrict SMB port	Restrict SMB port	Enable/Disable
	Restrict SMTP port	Restrict SMTP port	Enable/Disable
	Restrict dedicated port	Restrict dedicated port	Enable/Disable
	Restrict remote operation's software port	Restrict remote operation's software port	Enable/Disable
	Restrict SIP (IP Fax) port	Restrict SIP (IP Fax) port	Enable/Disable
	Restrict mDNS port	Restrict mDNS port	Enable/Disable
	Restrict SLP port	Restrict SLP port	Enable/Disable

	Restrict SNMP port	Restrict SNMP port	Enable/Disable
9-4	Authentication	Authentication function	–
9-4-1	Authentication policy	Authentication operational policy	–
	Prohibit guest users from using the printer	Prohibit guest users from using the device	Enable/Disable
	Force auto logout	Force auto logout	Enable/Disable
	Logout period	Time Until Logout	xx sec
9-4-2	Pwd operation policy	Password operational policy	–
	Prohibit caching of password for external servers	Prohibit caching of password for external servers	Enable/Disable
	Display warning when default password is in use	Display warning when default password is in use	Enable/Disable
	Prohibit use of default password for remote access	Prohibit use of default password for remote access	Enable/Disable
9-4-3	Password settings policy	Password settings policy	–
	Minimum number of characters for password	Set minimum number of characters for password	Enable/Disable
	characters (1 - 32)	Set minimum number of characters	1~32 (characters)
	Password validity period	Set password validity period	Enable/Disable
	days (1 - 180)	Validity period for password	1-180 days
	Prohibit use of 3 or more identical consecutive characters	Prohibit use of 3 or more identical consecutive characters	Enable/Disable
	Require use of at least 1 uppercase character	Force use of at least 1 uppercase character	Enable/Disable
	Require use of at least 1 lowercase character	Force use of at least 1 lowercase character	Enable/Disable

	Require use of at least 1 number	Force use of at least 1 digit	Enable/Disable
	Require use of at least 1 symbol	Force use of at least 1 symbol	Enable/Disable
9-4-4	Lockout policy	Lockout Policy	–
	Enable lockout	Enable lockout	Enable/Disable
	Lockout threshold (times)	Lockout Threshold	1-10 time
	Lockout period (minutes)	Lockout Period	1-60 min
9-5	Key/Certificate	Key/Certificate function	–
	Prohibit use of weak encryption	Prohibit use of weak encryption	Enable/Disable
	Prohibit use of key/certificates with weak encryption	Prohibit use of key/certificate with weak encryption	Enable/Disable
	Use TPM to store password and key	Use TPM to store password and key	Enable/Disable
9-6	Log	Log function	–
	Force recording of audit log	Force recording of audit log	Enable/Disable
	Require SNTP settings	Force SNTP settings	Enable/Disable
	Server name	SNTP server name setting	URL
9-7	Job	Job function	–
9-7-1	Printing policy	Printing Policy	–
	Prohibit immediate printing of received jobs	Prohibit immediate printing of received jobs	Enable/Disable
9-7-2	Send/Receive policy	Sending/Receiving Policy	–
	Allow sending only to registered addresses	Allow sending only to registered addresses	Enable/Disable
	Force confirmation of fax number	Force confirmation of fax number	Enable/Disable
	Prohibit auto forwarding	Prohibit auto forwarding	Enable/Disable

9-7-3	Storage	Storage policy	–
	Force complete deletion of data	Force complete deletion of data	Enable/Disable

("XX" represents alphanumeric characters.)

Restoring Printer's LAN Settings to Defaults

Important

- Initialization erases all network settings on the printer, making printing/scanning/faxing operation from a computer over a network impossible. To use the printer over a network again after restoring it to the factory defaults, refer to Setup Guide and redo setup.
- If **User management settings** is enabled or **LCD, Remote UI, and other tools** is set as the scope for **Administrator password settings**, the administrator password must be entered.

Initialize the network setting using the printer's operation panel.

➡ Reset settings

Default Network Settings

LAN Connection Defaults

Item	Default
Enable/disable Wired LAN	**Disable**
Network name (SSID)	BJNPSETUP
Wi-Fi security	**Disable**
IP address IPv4	**Auto setup**
IP address IPv6	Auto setup
Set printer name*	XXXXXXXXXXXXXXX
Enable/disable IPv6	**Enable**
Enable/disable WSD	**Enable**
Timeout settings (WSD)	**15 minutes**
Enable/disable Bonjour	**Enable**
Bonjour service name*	Canon ModelName
LPR protocol settings	**Enable**
RAW protocol	**Enable**
LLMNR	**Enable**
Wi-Fi DRX settings	**Enable**
Wired LAN DRX settings	**Enable**

("XX" represents alphanumeric characters.)

* Default value depends on printer. To check value, use operation panel.

➡ LAN settings

Wireless Direct Defaults

Item	Default

Network name (SSID)	DIRECT-abXX-ModelName *1 *2
Password	YYYYYYYYYY *3
Wi-Fi security	**WPA2-PSK (AES)**
Connection request confirmation	Displayed
2.4GHz/5GHz Switch	2.4GHz

*1 Default value depends on printer. To check value, use operation panel.

*2 "ab" is specified at random and "XX" represents last two digits of printer's MAC address. (The value is specified when the printer is turned on for the first time.)

*3 The password is specified automatically when the printer is turned on for the first time.

Connecting with Wireless Direct

You can connect devices (e.g. computer, smartphone, or tablet) to the printer by two methods below.

- Wireless connection (connecting devices via a wireless router)
- Direct wireless connection (connecting devices directly without a wireless router)

This section describes Wireless Direct, which allows you to print by connecting the devices to the printer directly.

Important

- You can connect up to 5 devices to the printer at the same time with Wireless Direct.
- Check the usage restrictions and connect the printer to the Wireless Direct.

  ➡ Restrictions
- Some printers support IEEE802.1X/EAP (WPA/WPA2/WPA3 Enterprise). If you enable Wireless Direct while IEEE802.1X/EAP (WPA/WPA2/WPA3 Enterprise) is enabled, IEEE802.1X/EAP (WPA/WPA2/WPA3 Enterprise) is disabled.

  When IEEE802.1X/EAP (WPA/WPA2/WPA3 Enterprise) is enabled, enable **Administrator mode** so that the Wireless Direct settings cannot be changed.

Connecting a smartphone/tablet/computer to the printer

1. Enable Wi-Fi function on smartphone/tablet/computer.

   Enable Wi-Fi in the Settings menu on your smartphone/tablet/computer.

   For instructions on enabling the Wi-Fi function, refer to the instruction manual for your smartphone/tablet/computer.

2. Select (**Setup**) on **HOME** screen.

Note

- If **User management settings** is enabled, the user selection screen is displayed before the **HOME** screen is displayed.

3. Select **Printer settings**.

4. Select **LAN settings**.

5. Select **Wireless Direct**.

6. Select **Connect to smartphone**.

7. Select **iPhone/iPad** to connect with an iPhone/iPad, **Android device** to connect with an Android device, and **Others** to connect with other device.

   - **iPhone/iPad**

     1. Select **QR Code**.
     2. Scan the displayed QR code with the iPhone/iPad standard camera app or smartphone/tablet app .

        The iPhone/iPad is connected to the printer.

     Note

     - If the QR code cannot be read, select (Back) in the screen displayed QR code and connect the printer from **Connect to smartphone** > **Others**.

   - **Android device**

     1. Select **QR Code**.
     2. Scan the displayed QR code with the Android device in one of the following ways.
        - Select network and Wi-Fi on the setting of Android device. Select **QR code** icon to the right of the **Add network** at the bottom of the list of Wi-Fi connections and scan the QR code.
        - Scan the displayed QR code with the Android standard camera app or smartphone/tablet app .
        - Scan the displayed QR code with a QR code reading app.

        The Android device is connected to the printer.

        Note

        - Wireless Direct using QR code can be used with Android 5.0 or later.
        - It is available in Android 10 or later to scan QR code from setting and read QR code with the Android standard camera.
        - Depending on the smartphone/tablet, QR code may not be readable.

- If the QR code cannot be read, select (Back) in the screen displayed QR code and connect the printer from **Connect to smartphone** > **Others**.

- **Others**

  1. Select **Next**.

     Network name (SSID) and **Password** are displayed.

     Note

     - To show the password, select **Show password**. To hide the password, select **Hide password**.
     - The password is required when connecting smartphone/tablet/computer to the printer.

  2. Select "DIRECT-XXXX- ModelName" ("X" represents alphanumeric characters) on your smartphone/tablet/computer.
  3. Enter **Password** on smartphone/tablet/computer.

     The smartphone/tablet/computer is connected to the printer.

     Note

     - If the printer is set to display a confirmation screen in **Connection request confirmation** of Changing Wireless Direct Setting, when the wireless direct compatible device connects to the printer, a confirmation screen asking for permission to connect is displayed on the printer operation panel.

       Make sure the name on the operation panel is the same as that of your wireless communication device and select **Yes**.

You can print from your smartphone or tablet by installing the App. Download it from App Store and Google Play.

➡ For iOS device
➡ For Android device

Changing Wireless Direct Setting

Change the settings for the Wireless Direct following the procedure below.

1. Make sure that printer is turned on.

2. Select (**Setup**) on **HOME** screen and select **Printer settings**.

Note

- If **User management settings** is enabled, the user selection screen is displayed before the **HOME** screen is displayed.

3. Select **LAN settings**.

4. Select **Wireless Direct**.

Note

- To change the Wireless Direct settings, you need to enable Wireless Direct in advance.

  Select **Enable/disable Wireless Direct** on the menu screen displayed when selecting **Wireless Direct** and enable Wireless Direct.

5. Select a setting item.

Scroll down if necessary.

- **See settings**

  The setting values for using the printer with Wireless Direct are displayed.

- **Change network name (SSID)**

  Change the identifier (SSID) for Wireless Direct.

  The identifier (SSID) is the printer's name (device name) displayed on a Wi-Fi Direct compatible device.

  Follow the procedure below to change the identifier (SSID).

  - To set manually
    1. Select the displayed identifier (SSID).
    2. Change using the keyboard that appears.
    3. When you have finished making changes, select **OK**.
  - To set automatically
    1. Select **Auto update**.
    2. Select **Yes**.

       You can check the updated setting.

    Note

    - To show the password, select **Show password**. To hide the password, select **Hide password**.

- **Change password**

  Change the password for Wireless Direct.

  - To set manually
    1. Select **Change manually**.
    2. Select the displayed password.

3. Enter the new password (10 characters).

   Change using the keyboard that appears.

4. When you have finished making changes, select **OK**.

- To set automatically

1. Select **Auto update**.
2. Select **Yes**.

   You can check the updated setting.

Note

- To show the password, select **Show password**. To hide the password, select **Hide password**.

- **Connection request confirmation**

  Change the confirmation screen setting when a Wi-Fi Direct compatible device is connecting to the printer.

  If you want the printer to display the screen to inform you a Wi-Fi Direct compatible device is connecting to the printer, select **ON**.

  Important

  - To prevent an unauthorized access, we recommend you should select the setting to display the confirmation screen.

- **2.4GHz/5GHz Switch**

  Change the frequency used for Wireless Direct.

  While using Wireless Direct (2.4 GHz), the connection of nearby Bluetooth speakers may be interrupted from time to time. In such a case, switching to 5 GHz will reduce the trouble.

Note

- If you change the Wireless Direct setting of the printer, also change the wireless router setting of the device.

Problems While Printing (Scanning) from Smartphone/Tablet

- Cannot Print (Scan) from Smartphone/Tablet

Cannot Print (Scan) from Smartphone/Tablet

If you cannot Print (Scan) from your smartphone/tablet, it is possible that your smartphone/tablet cannot communicate with the printer.

Check the cause of your problem according to the connection method.

- Cannot Communicate with Printer via Wi-Fi
- Cannot Connect to Printer through Wireless Direct

Note

- For problems on printing with other connection methods or more on performing settings of each connection method:
  - Using PIXMA/MAXIFY Cloud Link
  - Printing from iOS Device (AirPrint)

Q Cannot Communicate with Printer via Wi-Fi

A

If your smartphone/tablet cannot communicate with the printer, check the following.

Check 1 Check power status of printer, network devices (e.g. wireless router), and your smartphone/tablet.

- Turn on the printer or devices.
- If the power is already turned on, cycle the power switch.
- It may be necessary to resolve wireless router problems (e.g. update interval of a key, problems of DHCP update interval, energy saving mode) or to update the wireless router firmware.

For details, contact the manufacturer of your wireless router.

Check 2 Check settings of your smartphone/tablet.

Make sure Wi-Fi is enabled on your device.

For details, refer to your device's instruction manual.

Check 3 Is printer connected to wireless router?

- Use the icon on the lower left of the touch screen to check the connection status between the printer and wireless router.

  If the icon is not displayed, Wi-Fi is disabled. Turn on wireless communication on the printer.
- Make sure the network settings of the printer (e.g. network name (SSID) or network key (password), etc.) are identical with those of the wireless router.

  To check the settings of the wireless router, refer to the instruction manual provided with it or contact its manufacturer.

To check the current network settings of the printer, print out the network settings information or use the operation panel to display it.

- Display on the operation panel of the printer.

  ➡ LAN settings

- Print the network settings.

  ➡ Printing Network Settings

Note

- If you have a computer, Wi-Fi Connection Assistant allows you to diagnose and repair the network status.

  Select the link below to download Wi-Fi Connection Assistant and install it.

  ➡ Checking Printer Connection Status Using Wi-Fi Connection Assistant

  Refer to below in regard to starting up Wi-Fi Connection Assistant.

  — For Windows:

  ➡ Starting Up Wi-Fi Connection Assistant

  — For macOS:

  ➡ Starting Up Wi-Fi Connection Assistant

Check 4 Are network settings of your smartphone/tablet identical with those of wireless router?

Make sure the network settings of the printer (e.g. network name (SSID) or network key (password), etc.) are identical with those of the wireless router.

To check the settings of your smartphone/tablet, refer to the instruction manual provided with it.

If the network settings of your smartphone/tablet are not identical with those of the wireless router, change the network settings of it to match with those of the wireless router.

Check 5 Make sure the printer is not placed too far away from the wireless router.

If the distance between the printer and wireless router is too far, wireless communication becomes poor. Place the printer and wireless router close to each other.

Check 6 There may be a problem with the signal. Monitor signal status and move printer and wireless router as necessary.

Place the printer and wireless router where there are no obstacles between them. Wireless communication between different rooms or floors is generally poor. Wireless communication can be impeded by building materials containing metal or concrete. If the printer cannot communicate with the computer over a Wi-Fi due to a wall, place the printer and the computer in the same room.

In addition, if a device like a microwave oven that emits radio waves of the same frequency bandwidth as a wireless router is nearby, it may cause interference. Place the wireless router as far away from interference sources as possible.

Check the signal strength on the touch screen.

➡ Using Touch Screen

Note

- If the web page cannot be printed using an Android device, it may be possible to print it by changing Wireless Direct connection.

  ➡ Connecting with Wireless Direct

Q Cannot Communicate with Printer while It Is in Wireless Direct

A

If your smartphone/tablet cannot communicate with the printer in the Wireless Direct, check the following.

Check 1 Check power status of printer and device (e.g. smartphone/tablet).

Turn on the printer or devices.

If the power is already turned on, cycle the power switch.

Check 2 Check if the icon is displayed on the touch screen of the printer.

If it is not displayed, Wireless Direct is disabled. Please turn on the Wireless Direct.

Check 3 Check settings of your smartphone/tablet.

Make sure Wi-Fi is enabled on your device.

For details, refer to your device's instruction manual.

Check 4 Check that printer is selected as connection for devices (e.g. smartphone/tablet).

Select the network name (SSID) for Wireless Direct specified for the printer as the connection destination for devices.

Check the destination on your device.

For details, refer to your device's instruction manual or visit the manufacturer's website.

To check the network name (SSID) for Wireless Direct specified for the printer, print out the network settings information or use the operation panel to display it.

- Display on the operation panel of the printer.

  ➡ LAN settings

- Print the network settings.

  ➡ Printing Network Settings

Check 5 Check that Wireless Direct password set for printer is entered correctly.

To check the password specified for the printer, print out the network settings information or use the operation panel to display it.

- Display on the operation panel of the printer.

➡ LAN settings

- Print the network settings.

  ➡ Printing Network Settings

Check 6 Check that printer is not placed too far away from device.

If the distance between the printer and the device is too far, wireless communication becomes poor. Place the printer and the device close to each other.

Check 7 Check that 5 devices are already connected.

Wireless Direct does not allow more than 5 devices to be connected.

Note

- Some printers support IEEE802.1X/EAP (WPA/WPA2/WPA3 Enterprise). Note that when IEEE802.1X/EAP (WPA/WPA2/WPA3 Enterprise) is set to **Enable**, Wireless Direct is set to **Disable**.
- Depending on the specifications of the printer you are using, some of the features described (connection, scanner/copy and etc.) may not apply.

  For details about the functions of your printer, see Product Specifications.

Printing Problems

- Printer Does Not Print
- Printer Does Not Pick Up or Feed the Paper/"No Paper" Error
- Resolving Print Quality Problems
- Change to Offline (Windows)
- No Ink Level Appears in Canon IJ Status Monitor (Windows)

Q

Printer Does Not Print

A

Check 1 Make sure printer is turned on.

If not, make sure the printer is securely plugged in and press **ON** button to turn on.

Wait until the **HOME** screen appears on the touch screen. After a certain period of time has elapsed, the screen goes to sleep mode. In that case, touch the touch screen.

Check 2 Make sure that the cassette is correctly inserted.

If there is an object under the printer, the cassette cannot be correctly inserted and paper may not be correctly fed.

Make sure there are no objects under the printer and push the cassette flatly into the printer until it stops.

➡ Loading Plain Paper

Check 3 Make sure printer is properly connected to computer.

If you are using a USB cable, make sure it is securely connected to both the printer and the computer. When the USB cable is securely plugged in, check the following:

- If you are using a relay device such as a USB hub, disconnect it, connect the printer directly to the computer, and retry the printing. If printing starts normally, there is a problem with the relay device. Contact the vendor of the relay device.
- There could also be a problem with the USB cable. Replace the USB cable and retry the printing.

If you use the printer with a network connection, make sure the printer is correctly set up for network use.

➡ Cannot Find Printer on Network (Windows/macOS)

Note

- Wi-Fi Connection Assistant allows you to diagnose and repair the network status.

  Select the link below to download Wi-Fi Connection Assistant and install it.

  ➡ Checking Printer Connection Status Using Wi-Fi Connection Assistant

  Refer to below in regard to starting up Wi-Fi Connection Assistant.

  - **For Windows:**

    ➡ Starting Up Wi-Fi Connection Assistant

  - **For macOS:**

    ➡ Starting Up Wi-Fi Connection Assistant

Check 4 Make sure paper settings match information set for cassette.

If the paper settings do not match the information set for the cassette, an error message appears on the operation panel. Follow the instructions on the operation panel to solve the problem.

Note

- You can select whether the message which prevents misprinting is displayed.
  - To change the message view setting when printing using the printer's operation panel:
    - Feed settings
  - To change the message view setting when printing using the Printer Driver:
    - Changing the Printer Operation Mode (Windows)
    - Changing the Printer Operation Mode (macOS)

Check 5 If printing from a computer, delete unnecessary print jobs.

- **For Windows:**
  - Deleting the Undesired Print Job
- **For macOS:**
  - Deleting the Undesired Print Job

Check 6 Are your printer's Printer Driver selected when printing?

The printer will not print properly if you are using a printer driver for a different printer.

- **For Windows:**

  Make sure "Canon XXX series" (where "XXX" is your printer's name) is selected in the Print dialog box.

  Note

  - If multiple printers are registered to your computer, set your printer as **Let Windows manage my default printer** so that it is selected by default.
    - Default Printer Keeps Changing (Windows)

- **For macOS:**

  Make sure your printer's name is selected in **Printer** in the Print dialog.

  Note

  - If multiple printers are registered to your computer, select **Set as Default Printer** from **System Settings** > **Printers & Scanners** for a printer to make the one selected by default.

Check 7 Are you trying to print a large data file? (Windows)

If you are trying to print a large data file, it takes a long time to start printing.

If the printer does not start printing after a certain period of time, select **On** for **Prevention of Print Data Loss** on the **Print Options** dialog box.

For details, refer to Page Setup Tab Description.

Important

- Selecting **On** for **Prevention of Print Data Loss** may reduce print quality.
- After printing is completed, select **Off** for **Prevention of Print Data Loss**.

Check 8 If printing from your computer, restart the computer.

Restart the computer and try printing again.

Important

- For Windows:

  To restart your computer, choose **Restart** instead of **Shut down**.

Q

Printer Does Not Pick Up or Feed the Paper/"No Paper" Error

A

Check 1 Check the printer is placed on the right spot.

Place the printer on a flat table or similar platform.

Check 2 Make sure paper is loaded in the specified cassette.

➡ Loading Paper

Check 3 When loading paper, consider the following.

- When loading two or more sheets of paper, align the edges of the sheets before loading the paper.
- When loading two or more sheets of paper, make sure the paper stack does not exceed the paper load limit.

  However, paper may not feed correctly at the maximum capacity, depending on the type of paper or environmental conditions (very high or low temperature and humidity). In such cases, reduce the amount of paper you load at a time to less than half of the paper load limit.
- When you load the paper on the cassette, place the print side facing DOWN and align the right/left/front paper guides with the paper stack.

  ➡ Loading Paper

Check 4 Is paper too thick or curled?

➡ Unsupported Media Types

Check 5 When loading envelopes, consider the following.

- When printing on envelopes, see Loading Envelopes, and prepare the envelopes before printing.

  Once you have prepared the envelopes, load them in portrait orientation. If the envelopes are placed in landscape orientation, they will not feed properly.

Check 6 Make sure media type and paper size settings match with loaded paper.

Check 7 Clean Paper Feed Roller.

➡ Cleaning Paper Feed Rollers

Note

- Cleaning the paper feed roller abrades it, so do this only when necessary.

Check 8 If two or more sheets of paper feed from cassette at once, clean inside of cassette.

➡ Cleaning Cassette Pads

Check 9 Are transport unit attached properly?

See Rear View for the positions of the transport unit.

If the measures above do not solve the problem, contact your nearest Canon service center to request a repair.

Important

- Do not tilt the printer when moving it since the ink may leak out.
- When transporting the printer for repairing it, see Repairing Your Printer.

Resolving Print Quality Problems

If the print results are unsatisfactory due to white streaks, misaligned/distorted lines, or uneven colors, check the paper and print quality settings first.

Check 1 Make sure that **Print target for plain paper** is set to **Text and photos**.

Select (**Setup**) on **HOME** screen > **Printer settings** > **Print settings**, and make sure that **Print target for plain paper** is set to **Text and photos**.

If **Print target for plain paper** is set to **Text only**, change it to **Text and photos**.

Note

- If **User management settings** is enabled, the user selection screen is displayed before the **HOME** screen is displayed.

Check 2 Do page size and media type settings match size and type of loaded paper?

If these settings do not match, it is not possible to obtain the proper result.

If you are printing a photograph or an illustration, an incorrect paper type setting may reduce the quality of the printout color.

Also, if you print with an incorrect paper type setting, the printed surface may be scratched.

The method for checking the paper and print quality settings differs depending on what you are using your printer for.

- **Printing from printer**

  Check the settings using the operation panel of the printer.

  ➡ Setting Items for Copying

- **Printing from your computer**

  Check the settings using the Printer Driver.

  ➡ Basic Printing Setup

- **Printing from your smartphone/tablet using**

  Check the settings on the App.

  ➡ Print Photos from Your Smartphone

Check 3 Make sure appropriate print quality is selected (see list above).

Select a print quality suited to the paper and to what you are printing. If you notice blurs or uneven colors, increase the print quality setting and retry the printing.

Check 4 If problem is not resolved, click on illustration that corresponds to problem.

Ink Does Not Come Out

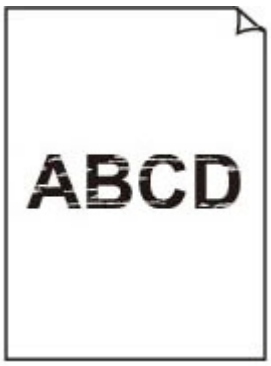

Blurry or Fuzzy

Inaccurate or Bleeding Colors

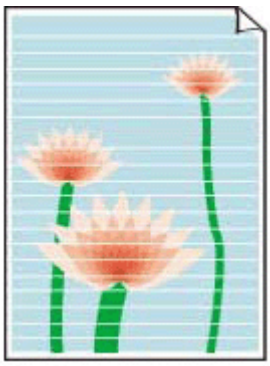

Streaks

Printed in Black and White

Lines Are Misaligned/Distorted

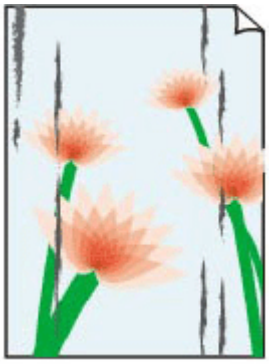

Paper Is Smudged/ Printed Surface Is Scratched

Ink Blots/Paper Curl

Images Incomplete/ Cannot Complete Printing

	Tokyo	London
Jan.	12,000	10,500
Feb.	11,500	10,800
Mar.	13,800	12,800
Apr.	12,000	10,500
May.	11,500	10,800
June	13,800	12,800

Lines Incomplete or Missing (Windows)

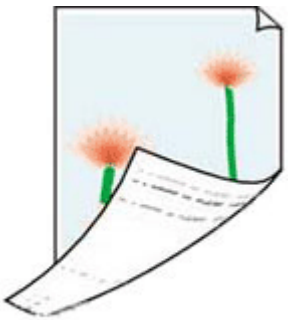

Back of Paper Is Smudged

Uneven Colors

Streaked Colors

Printed Barcodes Are Not Recognized

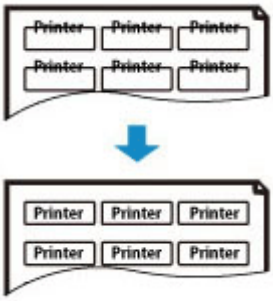

The Print Position Shifts

Note

- Depending on the specifications of the printer you are using, some of the features described (connection, scanner/copy and etc.) may not apply.

  For details about the functions of your printer, see Product Specifications.

Q

Ink Does Not Come Out/Blurry or Fuzzy/Inaccurate or Bleeding Colors/Streaks

Ink Does Not Come Out

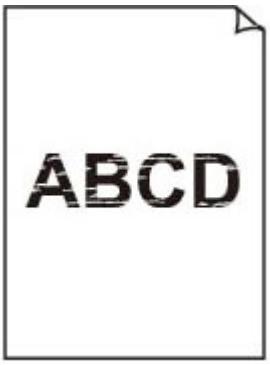

Blurry or Fuzzy

Inaccurate or Bleeding Colors

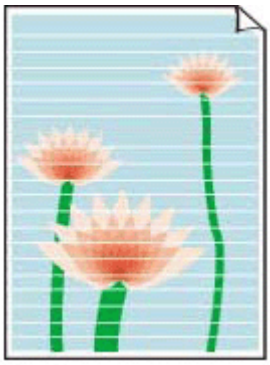

Streaks

A

Note

- If printouts are blank, black does not print, is faint, or has a blue or red tint, refer to this web page.

Check 1 Check paper and print quality settings.

➡ Resolving Print Quality Problems

Check 2 Are the print head nozzles clogged?

Print the nozzle check pattern to determine whether the ink ejects properly from the print head nozzles.

Step 1 Printing a Nozzle Check Pattern.

After printing the nozzle check pattern, examine the pattern.

- From the printer

  ➡ Printing the Nozzle Check Pattern

If the pattern is not printed correctly, go to the next step.

Step 2 Clean the print head.

After cleaning the print head, print the nozzle check pattern and check the result.

- From the printer

  ➡ Cleaning the Print Head

If it still does not improve, go to the next step.

Step 3 Clean the print head again.

After cleaning the print head again, print the nozzle check pattern and check the result.

If it still does not improve, go to the next step.

Step 4 Clean the print head deeply.

After cleaning the print head deeply, print the nozzle check pattern and check the result.

- From the printer

  ➡ Deep Print Head Cleaning

If it does not improve, turn off the printer, wait for more than 24 hours without unplugging the power supply, and go to the next step.

Step 5 Clean the print head deeply again.

After cleaning the print head deeply again, print the nozzle check pattern and check the result.

For details on printing the nozzle check pattern, print head cleaning, and print head deep cleaning, see If Printing Is Faint or Uneven.

Check 3 When using paper with one printable surface, check the correct printable side of the paper.

Printing on the wrong side of such paper may cause unclear prints or prints with reduced quality.

When you load paper in the cassette, load paper with the printable side facing down.

Refer to the instruction manual supplied with the paper for detailed information on the printable side.

- **When copying, see also the sections below:**

Check 4 Is platen glass or glass of ADF dirty?

Clean the platen glass or the glass of ADF.

➡ Cleaning Platen and Document Cover
➡ Cleaning the ADF (Auto Document Feeder)

Note

- If the glass of ADF is dirty, black streaks appear on the paper as shown below.

Check 5 Make sure original is properly loaded on platen or ADF.

When you load the original on the platen, load it with the side to be copied facing down. When you load the original on the ADF, load it with the side to be copied facing up.

➡ Loading Originals

Check 6 Is copy source a printed paper by printer?

If you use a printout done by this printer as the original, print quality may be reduced depending on the condition of the original.

Print from the printer directly, or reprint from the computer if you can reprint from it.

Check 7 If the ink still does not come out.

➡ Perform Replace Ink in Print Head

Note

- Although some air may enter the ink tube, it is not a malfunction. No problem if the nozzle check pattern is printed correctly.

Printed in Black and White

If the ink used by the printer is set to **Black only**, printouts from a computer etc. will be printed in black and white.

To print in color, select (**Setup**) on **HOME** screen > **Printer settings** > **Other printer settings**, and set **Force ink tank selection** to **All ink tanks**.

Note

- If **User management settings** is enabled, the user selection screen is displayed before the **HOME** screen is displayed.
- If you print from the printer's operation panel, the printer prints in color, regardless of the ink settings used by the printer.

Q

Lines Are Misaligned/Distorted

A

Note

- For the case of misaligned or distortion, refer to this web page.

Check 1 Check paper and print quality settings.

➡ Resolving Print Quality Problems

Check 2 Perform print head alignment.

If printed lines are misaligned/distorted or print results are otherwise unsatisfactory, adjust the print head position.

➡ Aligning the Print Head

Note

- If the problem is not resolved after performing the print head alignment, perform print head alignment manually.

  ➡ Aligning the Print Head Manually

Check 3 Increase print quality and try printing again.

Increasing the print quality using operation panel of the printer or from computer may improve the print result.

Q

Paper Is Smudged/Printed Surface Is Scratched/Ink Blots/Paper Curl

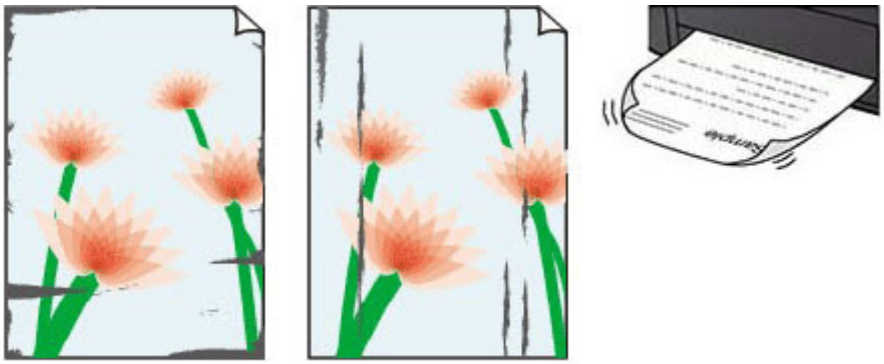

A

Check 1 Check paper and print quality settings.

➡ Resolving Print Quality Problems

Check 2 Check paper type.

Make sure you are using the right paper for what you are printing. To print data with high color saturation such as photographs or images with dark colors, we recommend that you use **Photo Paper Plus Glossy II** or other Canon specialty paper.

➡ Supported Media Types

Check 3 Correct curl before loading paper.

When using **Photo Paper Plus Semi-gloss**, even if the sheet is curled, load one sheet at a time as it is. Rolling this paper in the opposite direction to flatten it may crack the paper surface and reduce the print quality.

We recommend putting unused paper back into the package and storing it flat.

- **Plain Paper:**

  Turn the paper over and reload it to print on the other side.

- **Other Paper such as envelope:**

  If the paper corners curl more than 0.1 in. / 3 mm (A) in height, the paper may smudge or may not feed properly. Follow the instructions below to correct the paper curl.

1. Roll up paper in opposite direction to paper curl as shown below.

2. Check that paper is now flat.

   We recommend printing curl-corrected paper one sheet at a time.

Note

- Depending on paper type, the paper may smudge or may not feed properly even if it is not curled inward. Follow the instructions below to curl the paper outward up to 0.1 in. / 3 mm (C) in height before printing. This may improve the print result.

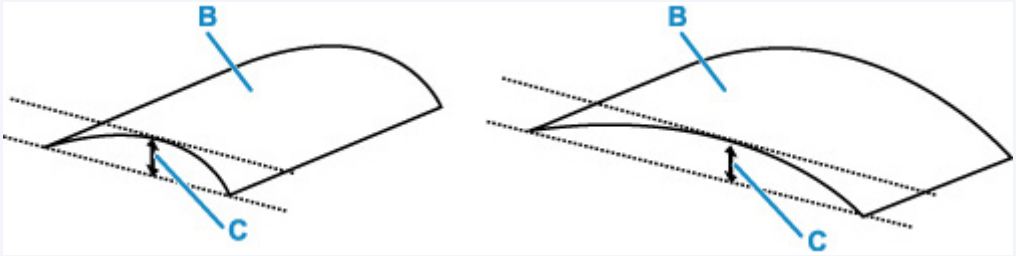

(B) Print side

We recommend feeding paper that has been curled outward one sheet at a time.

Check 4 Set printer to prevent paper abrasion.

Adjusting the setting to prevent paper abrasion will widen the clearance between the print head and the paper. If you notice abrasion even with the media type set correctly to match the paper, set the printer to prevent paper abrasion using the operation panel or the computer.

This may reduce the print speed.

* Once you have finished printing, undo this setting. Otherwise, it will apply to subsequent print jobs.

Select (**Setup**) on **HOME** screen, select **Printer settings** > **Print settings** in this order, and then set **Prevent paper abrasion** to **ON**.

➡ Changing Settings from Operation Panel

Note

- If **User management settings** is enabled, the user selection screen is displayed before the **HOME** screen is displayed.

Check 5 If brightness is set low, increase brightness setting and try printing again.

If you are printing with a low brightness setting on plain paper, the paper may absorb too much ink and become wavy, causing paper abrasion.

- Printing from your computer (Windows)

  Check the brightness setting in the Printer Driver.

  ➡ Adjusting Brightness

Check 6 Is platen glass or ADF scan helper dirty?

Clean the platen and surrounding.

➡ Cleaning Platen and Document Cover
➡ Cleaning the ADF (Auto Document Feeder)

Check 7 Is paper feed roller dirty?

Clean paper feed roller.

➡ Cleaning Paper Feed Rollers

Note

- Cleaning the paper feed roller abrades it, so do this only when necessary.

Check 8 Is inside of printer dirty?

During 2-sided printing, ink may stain the inside of the printer, smudging the printout.

Perform bottom plate cleaning to clean inside of printer.

➡ Cleaning Inside the Printer (Bottom Plate Cleaning)

Note

- To prevent staining inside the printer, be sure to set the correct paper size.

Check 9 Set longer ink drying time.

This allows the printed surface to dry, preventing smudges and scratches.

- **For Windows:**

  Set the waiting time using Remote UI.

  1. Open **Remote UI** on the web browser of your device.

     ➡ Configuration Changes / Display Printer Status Using Web Browser

  2. Select **Log in** on Remote UI.

     Note

     - If you specify the administrator password, enter the password.

  3. Select **Printer settings**.

4. Select **Ink drying wait time**.

- **For macOS:**

  Set the waiting time using Remote UI.

  ➡ Opening Remote UI for Maintenance

Q

Images Incomplete/Cannot Complete Printing

A

If the printing of photos, images, stops in the middle of printing and cannot be printed to the end, check the following items.

Check 1 Select setting not to compress printing data (Windows).

If you select the setting not to compress the printing data with an application software you are using, the printing result may be improved.

Click **Print Options** on **Page Setup** sheet of the Printer Driver. Select the **Do not allow application software to compress print data** check box and click **OK**.

Important

- Clear the check box once printing is complete.

Check 2 Are you trying to print a large data file? (Windows)

If you are trying to print a large data file, printing may not be performed properly due to missing print data.

Select **On** for **Prevention of Print Data Loss** on the **Print Options** dialog box of the Printer Driver.

For details, refer to Page Setup Tab Description.

Important

- Selecting **On** for **Prevention of Print Data Loss** may reduce print quality.
- After printing is completed, select **Off** for **Prevention of Print Data Loss**.

Check 3 Your hard disk may not have sufficient free space to store job.

Delete unnecessary files to free up disk space.

Lines Incomplete or Missing (Windows)

	Tokyo	London
Jan.	12,000	10,500
Feb.	11,500	10,800
Mar.	13,800	12,800
Apr.	12,000	10,500
May.	11,500	10,800
June	13,800	12,800

Check 1 Are you using Page Layout Printing or Binding Margin function?

When the Page Layout Printing or Binding margin function is in use, thin lines may not be printed. Try thickening the lines in the document.

Check 2 Are you trying to print a large data file? (Windows)

If you are trying to print a large data file, printing may not be performed properly due to missing print data.

Select **On** for **Prevention of Print Data Loss** on the **Print Options** dialog box of the Printer Driver.

For details, refer to Page Setup Tab Description.

Important

- Selecting **On** for **Prevention of Print Data Loss** may reduce print quality.
- After printing is completed, select **Off** for **Prevention of Print Data Loss**.

Q

Back of Paper Is Smudged

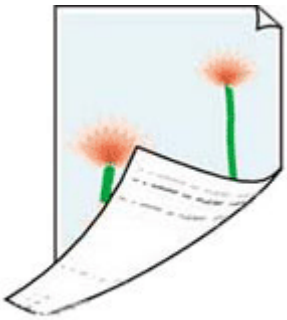

A

Check 1 Check paper and print quality settings.

➡ Resolving Print Quality Problems

Check 2 Perform bottom plate cleaning to clean inside of printer.

➡ Cleaning Inside the Printer (Bottom Plate Cleaning)

Note

- During 2-sided printing, or too much printing, ink may stain the inside of the printer.

Q

Uneven or Streaked Colors

A

Check 1 Increase print quality and try printing again.

Increasing the print quality using operation panel of the printer or from computer may improve the print result.

Check 2 Perform print head alignment.

➡ Aligning the Print Head

Note

- If the problem is not resolved after performing the print head alignment, perform print head alignment manually.

  ➡ Aligning the Print Head Manually

Change to Offline (Windows)

If the printer cannot communicate with the computer, an error message "Offline" may be displayed when printing. To bring the printer back online, try the following.

1. Check the connection (USB/Wi-Fi/Wired LAN).

   For USB connection:

   Make sure that the USB-connected printer is recognized by the computer.

   For Wi-Fi/Wired LAN connections:

   Make sure that or icon appears on the printer's touch screen.

2. Turn off printer and then turn it on again.

   Confirm that the offline mode has been disabled. If the printer is still offline, proceed to the next step.

3. Check the name of the MP Drivers (Printer Driver).

   Check the names of the printer and MP Drivers (Printer Driver) match. Set the using printer as default.

   ➡ Default Printer Keeps Changing (Windows)

   Confirm that the offline mode has been disabled. If the printer is still offline, proceed to the next step.

4. Make sure that printer is not set to **Use Printer Offline** mode.

   For Windows 11:

   1. Open Set Printers & scanners.
   2. Click the name of printer you want to configure.
   3. Click **Print preferences**.

      Print preferences window opens.
   4. Click **Maintenance** sheet.
   5. Click **View Printer Status**.

      The Canon IJ Status Monitor window is displayed.
   6. Click **Display Print Queue** of the Canon IJ Status Monitor window.

The Print Queue window is displayed.

7. Click **Printer** menu in the window displayed.

   Make sure **Use Printer Offline** is not selected.

   If it is selected, click **Use Printer Offline** to deselect it.

Confirm that the offline mode has been disabled. If the printer is still offline, proceed to the next step.

For Windows 10:

1. Open Set Printers & scanners.

2. Click the name of printer you want to configure, and select **Open queue**.

   The Print Queue window is displayed.

3. Click **Printer** menu in the window displayed.

   Make sure **Use Printer Offline** is not selected.

   If it is selected, click **Use Printer Offline** to deselect it.

Confirm that the offline mode has been disabled. If the printer is still offline, proceed to the next step.

5. For Wi-Fi/Wired LAN connections, use Wi-Fi Connection Assistant to change settings.

Diagnose and repair the network connections using Wi-Fi Connection Assistant.

Download Wi-Fi Connection Assistant from the below page, and install it on your computer.

➡ Checking Printer Connection Status Using Wi-Fi Connection Assistant

Refer to below in regard to starting up Wi-Fi Connection Assistant.

➡ Starting Up Wi-Fi Connection Assistant

Confirm that the offline mode has been disabled. If the printer is still offline, proceed to the next step.

6. Uninstall MP Drivers (Printer Driver) and reinstall MP Drivers (Printer Driver).

If your MP Drivers (Printer Driver) version is old or not installed correctly, you may not be able to print.

Confirm that the offline mode has been disabled. If the printer is still offline, proceed to the next step.

7. Restart computer.

The computer may be unstable for some reason. Restart the computer and try to print.

Important

- To restart your computer, choose **Restart** instead of **Shut down**.

Scanning Problems (Windows)

➤ Scanning Problems

Scanning Problems

- Scanner Does Not Work
- ScanGear (Scanner Driver) Does Not Start

Scanner Does Not Work

Check 1 Make sure that your scanner or printer is turned on.

Check 2 Check for any printererrors.

For messages, see When Error Occurred.

Check 3 Connect the USB cable to a different USB port on the computer.

Check 4 If the USB cable is connected to a USB hub, remove it from the USB hub and connect it to a USB port on the computer.

Check 5 With network connection, check the connection status and reconnect as needed.

➡ Network Scan Settings

Check 6 Restart the computer.

Check 7 Reinstall MP Drivers from the Setup CD-ROM or our website.

ScanGear (Scanner Driver) Does Not Start

Check 1 Make sure MP Drivers is installed.

If not installed, install MP Drivers from the Setup CD-ROM or our website.

Check 2 Select your scanner or printer on the application's menu.

Important

- If your scanner or printer name is displayed multiple times, select the one that does not include WIA.

Note

- The operation may differ depending on the application.
- Use the WIA driver when scanning from a WIA-compliant application.

  ➡ Scanning with WIA Driver

Check 3 Make sure that the application supports TWAIN.

You cannot start ScanGear (scanner driver) from applications not supporting TWAIN.

Check 4 Scan and save images with Scan Utility and open the files in your application.

Scanning Problems (macOS)

➤ Scanning Problems

Scanning Problems

- Scanner Does Not Work
- Scanner Driver Does Not Start

Scanner Does Not Work

Check 1 Check that your scanner or printer is turned on.

Check 2 Check for any printer errors.

For messages, see When Error Occurred.

Check 3 With network connection, check the connection status and reconnect as needed.

Check 4 With USB connection, connect the USB cable to a different USB port on the computer.

Check 5 If the USB cable is connected to a USB hub, remove it from the USB hub and connect it to a USB port on the computer.

Check 6 Restart the computer.

Check 7 To scan from the printer's operation panel with USB connection, click **Scan-from-Operation-Panel Settings** in the **Settings (General Settings)** dialog, and then check that the following checkboxes are selected.

- Your scanner or printer
- **Enables scanning from the operation panel**

Scanner Driver Does Not Start

Check 1 Make sure the application software supports AirPrint.

Check 2 Select your scanner or printer on the application's menu.

Note

- The operation may differ depending on the application.

Check 3 Scan and save images with IJ Scan Utility Lite and open the files in your application.

Check 4 Your scanner may be locked. (Personal scanners only)

If IJ Scan Utility Lite or the application is running, exit it. Slide the scanner lock switch to the release position ( ), then reconnect the USB cable.

Faxing Problems

- Problems Sending Faxes
- Problems Receiving Faxes/Cannot Print a Fax
- Telephone Problems
- Poor Quality Fax Received
- Fax Is Indistinctly Sent
- Cannot Set Shared Folder on Computer as Destination Folder

Problems Sending Faxes

- Cannot Send a Fax
- Errors Often Occur When Send a Fax
- Cannot Perform Sequential Broadcasting by Redialing, or Cannot Dial by Entering Numbers

Cannot Send a Fax

➡ Cannot send a fax to all destinations
➡ Cannot send a fax to a specific destination

Q Cannot send a fax to all destinations

A

If you cannot send a fax, check the following items.

Check 1 Check that the telephone line is connected correctly.

- Reconnect the phone cable to the telephone line jack (LINE), and plug the other end into the telephone wall jack or telephone jack.

  ➡ Connecting Telephone Line

- If "**Telephone line is in use.**" is displayed on the screen, the line is being used by the attached phone. Please check back later.

- If you do not hear the normal telephone line sound (dial tone) from the printer when you select , the telephone line connection may be incorrect or there may be a problem with the telephone line. Check that the connection method of the telephone line is correct, and contact your telephone company and the manufacturer of your terminal adapter.

- If "**Hook key is disabled.**" is displayed when you select , go to **Fax settings** > **Security control** > **Hook key setting** and then select **Enable**.

  ➡ Fax settings

Check 2 Is the telephone line type set correctly, if only sending a fax is not possible?

The telephone line type may be not set up automatically and correctly. Check the telephone line type setting and change it as necessary.

➡ Setting Telephone Line Type

Check 3 Is **Dial tone detect** set to **ON**?

Select **Fax settings** > **Advanced fax settings** > **Dial tone detect** and then select **OFF**.

➡ Fax settings

Check 4 Is the fax/telephone number registered correctly in printer's directory?

Check the recipient's fax/telephone number, correct the fax/telephone number registered in the printer's directory, and then send the document again.

➡ Changing Registered Information

Check 5 Is printer's memory full?

Delete contents in memory, and then send the fax again.

➡ Document Stored in Printer's Memory

Check 6 Is document loaded properly?

Remove the document, and then reload it on the platen or in the ADF.

➡ Loading Originals

Check 7 Does a printer error occur?

If an error message is displayed on the touch screen, check the cause.

For messages, refer to Message Is Displayed.

Select (Stop) and if the message is closed, you can send the fax.

Q Cannot send a fax to a specific destination

A

If you cannot send a fax to a specific destination, check the following items.

Check 1 Check if the **Check RX fax information** setting is not set to **ON**.

Set **Check RX fax information** in **Security control** of **Fax settings** to **OFF**.

➡ Preventing Mistransmission of Faxes

Check 2 Check if the fax can be sent manually.

If you do not hear the fax sound of the other device from the printer after dialing, the dialed phone number is incorrect or the destination is set to receive the fax manually.

If you can send the fax, check the registered fax phone number.

➡ Sending Fax after Speaking on Telephone

If the registered phone number is correct, add P (pause) with the # key at the very end of the registered phone number.

➡ Sending Fax to Registered Recipient

Errors Often Occur When Send a Fax

Check Check telephone line condition or connection.

If errors occur frequently when using an Internet telephone, it is possible that they can be reduced by selecting **Reduce** for **Error reduction setting (VoIP)** on **Advanced fax settings** under **Fax settings**.

For details, see **Error reduction setting (VoIP)**.

➡ Fax settings

Note

- If selecting **Reduce** does not reduce errors, select **Do not reduce**.

In addition, when using an Internet telephone, it is possible that errors occur more often if **4800 bps** or **9600 bps** is selected for **TX start speed**. Select **14400 bps** or **33600 bps**.

If the telephone line or connection is poor when using a general telephone, reducing the transmission start speed may correct the error.

Reduce the transmission start speed on **TX start speed** in **Adv. communication settings** in **Advanced fax settings** under **Fax settings**.

➡ Fax settings

Problems Receiving Faxes/Cannot Print a Fax

- Cannot Print a Fax/"Fax received. Saved in memory." Appears
- Printer Does Not Switch Automatically Between Voice and Fax Calls
- Cannot Receive a Fax/Cannot Receive a Color Fax
- Errors Often Occur When Received a Fax

Cannot Print a Fax/"Fax received. Saved in memory." Appears

Check 1 Is a different size of paper from that specified by **Page size** in **Fax paper settings** loaded?

If a different size of paper from that specified by **Page size** is loaded for printing faxes, the received faxes will not be printed and will be stored in the printer's memory (Memory Reception). Load the same size of paper as that specified by **Page size**, then select **OK**.

Check 2 Is paper loaded?

If paper is not loaded, received faxes will be stored in the printer's memory without being printed (Memory Reception). Select **Fax**, Load paper, and then select **OK**.

Check 3 Make sure there is enough ink left to print.

If there is not enough ink left to print, received faxes will be stored in the printer's memory without being printed (Memory Reception). Printing starts automatically after refilling the ink.

➡ Document Stored in Printer's Memory

Check 4 Is **User management settings** set to enable and are fax received documents set to not automatically print?

When **User management settings** is enabled and fax received documents are set to not automatically print, the administrator and general users with **Memory reference** permission can print the fax received document from **Memory reference**.

Print it manually from **Fax** > **Function list** > **Memory reference**. If a password is set, the administrator needs to enter the password.

The General users who are not permitted to use **Memory reference** of **User management settings** cannot print from **Memory reference**. When a standard user selects **Memory reference**, the screen will display **This function is restricted.** and will return to the **Function list**.

Telephone Problems

- Cannot Dial
- Telephone Disconnects During a Call

Cannot Dial

Check 1 Is phone cable connected correctly?

Check that the phone cable is connected correctly.

➡ Connecting Telephone Line

Check 2 Is telephone line type of printer or external device set correctly?

Check the telephone line type setting and change it as necessary.

➡ Setting Telephone Line Type

Telephone Disconnects During a Call

Check Is phone cable or telephone (or a peripheral device such as an external telephone, an answering device, or a computer modem) connected correctly?

Check that the phone cable and the telephone (or a peripheral device such as an external telephone, an answering device, or a computer modem) are connected correctly.

➡ Connecting Telephone Line

Poor Quality Fax Received

Check 1 Check scan settings of sender's fax device.

Ask the sender to adjust the scan settings of the fax device.

Check 2 Is **ECM RX** set to **OFF**?

Select **ON** for **ECM RX** in **Adv. communication settings** in **Advanced fax settings** under **Fax settings**.

If **ECM RX** is enabled, the sender's fax device resends the fax after correcting errors automatically.

➡ Fax settings

Check 3 Is sender's original document or scanning area of sender's fax device dirty?

The image quality of the fax is mainly determined by the sender's fax device. Contact the sender and ask the sender to check whether the scanning area of the fax device is dirty.

Check 4 Is ECM transmission/reception enabled although the line/connection is poor, or is the sender's fax device compatible with ECM?

- Select **ON** for **ECM RX** in **Adv. communication settings** in **Advanced fax settings** under **Fax settings**.

  ➡ Fax settings

- Contact the sender and ask the sender to check whether the fax device is set to enable ECM transmission.

  If the sender's or recipient's fax device is not compatible with ECM, the fax will be sent/received without automatic error correction.

- Reduce the reception start speed on **RX start speed** in **Adv. communication settings** in **Advanced fax settings** under **Fax settings**.

  ➡ Fax settings

Check 5 Check paper and print quality settings.

➡ Resolving Print Quality Problems

Mechanical Problems

- Printer Does Not Turn On
- Printer Turns Off Unexpectedly or Repeatedly
- USB Connection Problems
- Switching Printer's Connection to Network or Devices
- Wrong Language Appears in LCD

Q

Printer Does Not Turn On

A

Check 1 Press ON button.

➡ Turning the Printer On and Off

Check 2 Make sure power cord is securely connected to printer, and then turn on again.

Check 3 Unplug printer, leave it for at least 2 minutes, and then plug it back in and turn on again.

If this does not solve the problem, contact your nearest Canon service center to request a repair.

Q

Printer Turns Off Unexpectedly or Repeatedly

A

Check If printer is set to turn off automatically after a certain time, disable this setting.

If you have set the printer to turn off automatically after a specified time, the power will shut off by itself once that time has elapsed.

Note

- If this setting is changed, power consumption may increase.

1. Check that printer is turned on.
2. Select (**Setup**) on **HOME** screen.

   Note

   - If **User management settings** is enabled, the user selection screen is displayed before the **HOME** screen is displayed.

3. Select **ECO**.
4. Select **Power control**.
5. Select **Use auto power control**.
6. Select **Auto power off**.
7. Select **Never**.

   The setting to shut off the power automatically is disabled.

Note

- You can use the scheduling function of the Remote UI to turn the printer on or off at a specified time.

USB Connection Problems

If the printer connected to the computer via USB is not recognized, check the following items.

➡ USB Connection Not Recognized

The following problems may occur even though the USB connection is recognized.

- Printing (scanning) is slow.
- Hi-Speed USB connection does not work.
- A message such as "**This device can perform faster**" appears(Windows).

If the above is the case, check the following.

➡ USB Connection Does Not Work Properly

Note

- If your system environment does not support Hi-Speed USB, the printer operates at the slower speed of Full-Speed or Low-Speed. In this case, the printer works properly but printing (scanning) speed may slow down due to the communication speed.

USB Connection Not Recognized

Check 1 Make sure printer is turned on.

Check 2 Unplug the USB cable from the printer and the computer, and then connect it again.

As the illustration below, the USB port is at the back of the printer.

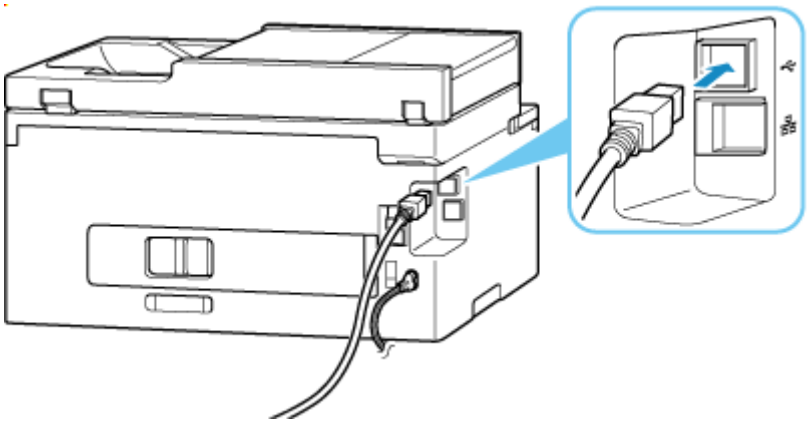

Important

- Check the orientation of the "Type-B" connector and connect to the printer. For details, refer to the instruction manual supplied with the USB cable.

Check 3 Check that **Enable bidirectional support** is selected in **Ports** sheet of **Printer properties** dialog box(Windows).

If not, select it to enable bidirectional support.

➡ Opening Printer Driver's Setup Screen

Check 4 Initialize the printer settings.

Select (**Setup**) on **HOME** screen > **Printer settings** > **Reset settings** > **Reset all**.

➡ Reset settings

After initializing the printer settings, redo setup.

Refer to Setup Guide and redo setup.

USB Connection Does Not Work Properly

Check Check following to make sure your system environment supports Hi-Speed USB connection.

- The types of USB cables that can be used differ depending on your printer. Check the shape of the USB cable connection of the printer.

  ➡ What Is USB cable?

- Does the USB port on your computer support Hi-Speed USB connection?
- Does the USB cable or the USB hub support Hi-Speed USB connection?

  Be sure to use a certified Hi-Speed USB cable. We recommend that the USB cable be no longer than 10 feet / 3 meters or so.

- Is the Hi-Speed USB driver working properly on your computer?

  Make sure the latest Hi-Speed USB driver is working properly and install the latest version of the Hi-Speed USB driver for your computer, if necessary.

Important

- For more information, contact the manufacturer of your computer, USB cable, or USB hub.

Wrong Language Appears in LCD

Follow the instructions below to select your language.

1. Select (**HOME**) button.

2. Select (**Setup**).

   ➡ Using Touch Screen

   Note

   - If **User management settings** is enabled, the user selection screen is displayed before the **HOME** screen is displayed.

3. Select .

4. Select seventh setting item from top.

5. Select a language for touch screen.

6. Select button on lower left.

   The desired language appears.

Installation and Download Problems

- Failed to MP Drivers (Printer Driver) Installation (Windows)
- Cannot Proceed Beyond Printer Connection Screen (Cannot Find Printer Connected via USB)
- Updating MP Drivers (Printer Driver) in Network Environment (Windows)
- Disable Function to Send Usage Information of Printer

Failed to MP Drivers (Printer Driver) Installation (Windows)

If the MP Drivers (Printer Driver) were not installed correctly, make sure that all **Windows Update** have been applied. If all **Windows Update** have not been applied, apply all **Windows Update**.

After confirming **Windows Update**, perform the following operations to install the MP Drivers (Printer Driver).

1. Open screen to uninstall MP Drivers (Printer Driver).

   For Windows 11:

   Select **Settings** > **Apps**.

   Select **Apps & features**.

   For Windows 10:

   Select **Settings** > **Apps**.

   For Windows 8.1 / Windows 7:

   Select **Control Panel** > **Programs and Features**.

2. Check if there is "**Canon XXX series Driver**" or "**Canon XXX series Printer Driver**" you want to install in list.

   "XXX" is the model name.

3. If you find MP Drivers (Printer Driver) for printer you want to install, uninstall it.

   If not found, proceed to the next step.

4. Restart computer.

   After restarting, install the latest MP Drivers (Printer Driver).

   Important

   - For Windows:

     To restart your computer, choose **Restart** instead of **Shut down**.

Q

Cannot Proceed Beyond Printer Connection Screen (Cannot Find Printer Connected via USB)

A

If you cannot proceed beyond the **Printer Connection** screen, check the following.

Check 1 Make sure USB cable is securely plugged in to printer and computer.

Connect the printer and the computer using a USB cable as the illustration below. The USB port is located at the back of the printer.

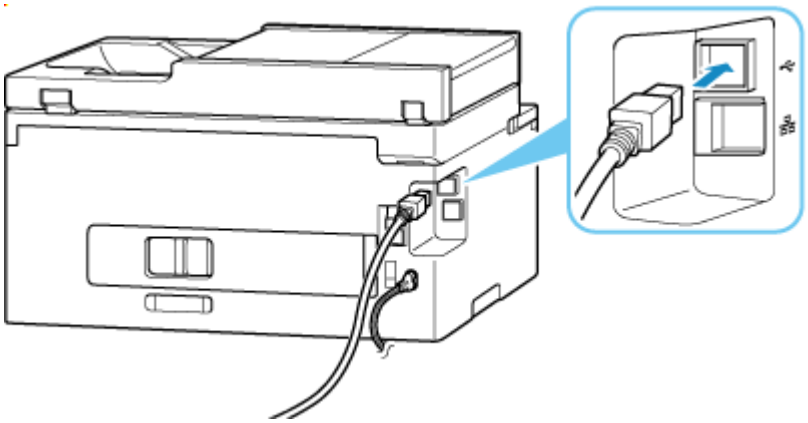

Important

- Check the orientation of the "Type-B" connector and connect to the printer. For details, refer to the instruction manual supplied with the USB cable.

Check 2 Follow procedure below to connect printer and computer again.

1. Unplug USB cable from printer and computer and connect it again.
2. Make sure no printer operation is in progress and turn off.
3. Turn on printer.

Check 3 Follow the steps below to install MP Drivers (Printer Driver) again.

1. Download the latest MP Drivers (Printer Driver).
2. Turn off printer.
3. Restart computer.

After restarting, install the latest MP Drivers (Printer Driver) downloaded in step 1.

Important

- When installing the MP Drivers (Printer Driver), make sure you select the correct printer name.
- For Windows:

  To restart your computer, choose **Restart** instead of **Shut down**.

Updating MP Drivers (Printer Driver) in Network Environment (Windows)

Download the latest MP Drivers (Printer Driver) in advance.

Download the latest MP Drivers (Printer Driver) for your model on the download page of the Canon website.

After the download is completed, overwrite and install the new version of the MP Drivers (Printer Driver) according to the specified installation procedure.

Note

- The network settings on the printer are not affected, so the printer can be used on the network without redoing settings.

Errors and Messages

- When Error Occurred
- Message Is Displayed
- Message for Faxing Is Displayed on Fax Standby Screen

When Error Occurred

If an error occurs while printing, for example, if the paper runs out or jams, a troubleshooting message is displayed automatically. For some errors, a support code (error number) is also displayed.

Take the appropriate action described in the message.

When a Support Code and a Message are displayed on the Computer Screen (Windows):

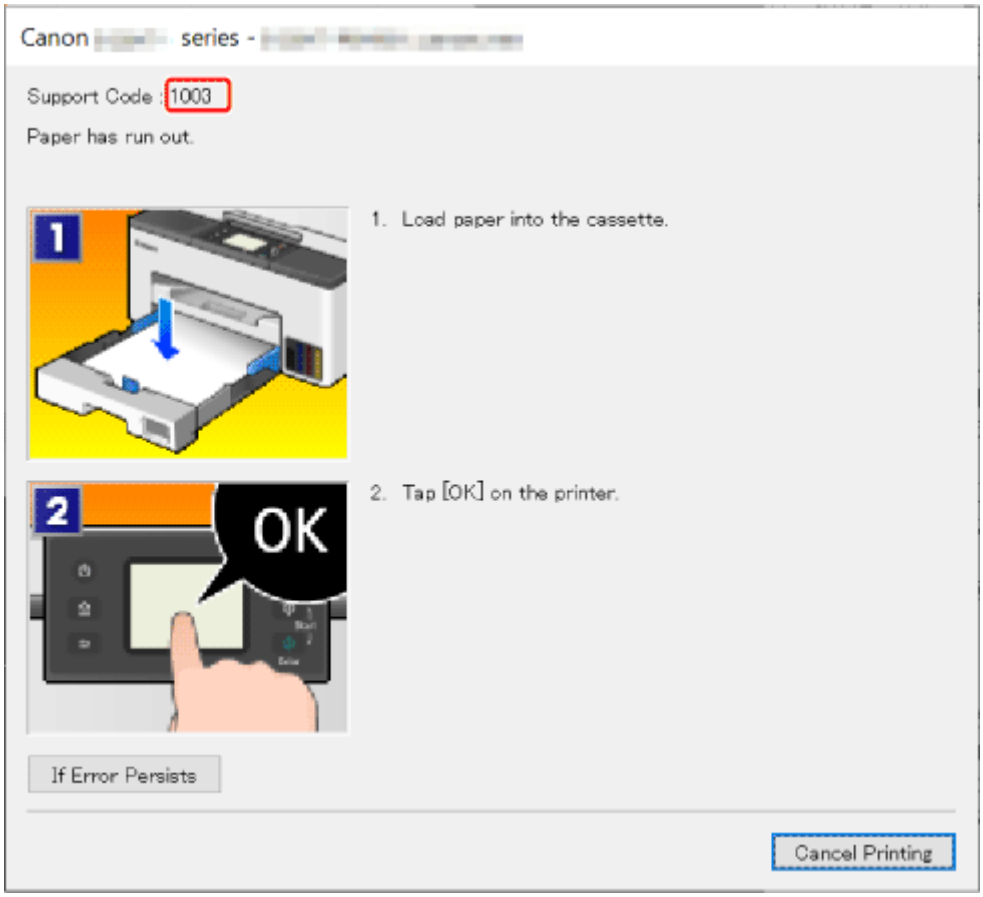

When a Support Code and a Message are displayed on the Printer's Touch Screen:

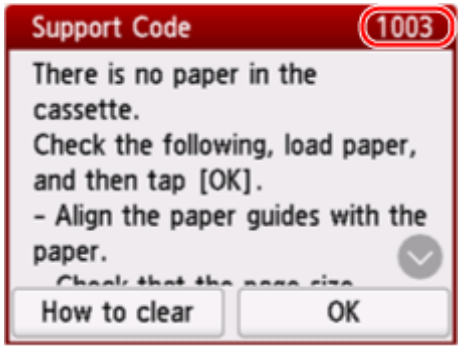

For details on how to resolve errors with Support Codes, see List of Support Codes for Printer Errors.

For details on how to resolve errors without Support Codes, see Message Is Displayed.

Message Is Displayed

This section describes some of the messages.

If a message is displayed on the printer's touch screen, see below.

➡ Message Is Displayed on Printer's Touch Screen

If a message is displayed on the computer, see below.

➡ Error Regarding Automatic 2-sided Printing Is Displayed
➡ Error Regarding Power Cord Being Unplugged Is Displayed (Windows)
➡ Writing Error/Output Error/Communication Error (Windows)
➡ Other Error Messages (Windows)

Message Is Displayed on Printer's Touch Screen

Check the message and take appropriate action.

- **Power was not turned off correctly the last time. Press the ⏻ button when turning power off.**

  The printer may have been unplugged while the power was still on.

  Select **OK** on the printer's touch screen to cancel the error.

  Refer to Turning the Printer On and Off for the correct way to turn the power off.

- **Cannot connect to the server. Please wait a while and try again.**

  The printer cannot connect to the server due to a communication error.

  Select **OK** on the printer's touch screen to cancel the error and try again after a while.

- **Check the page size and tap [OK].**

  The size of the loaded paper is different from the paper size set in **Fax paper settings**.

  Select **OK** on the printer's touch screen to cancel the error.

  Select **Function list** in **Fax**, check **Page size**, **Type** and **Paper src** in **Fax paper settings**, and then reload the paper accordingly.

- **Replace the receiver.**

  The handset is not placed in the handset cradle correctly.

  Replace the handset correctly.

Note

- See Message for Faxing Is Displayed on Fax Standby Screen for the message displayed on the fax standby screen.

Error Regarding Automatic 2-sided Printing Is Displayed

Check See Automatic 2-sided Printing Problems and take the appropriate action.

Error Regarding Power Cord Being Unplugged Is Displayed (Windows)

The printer may have been unplugged while it was on.

Check the error message displayed on the computer and click **OK**.

The printer starts printing.

Refer to Turning the Printer On and Off for the correct way to turn the power off.

Writing Error/Output Error/Communication Error (Windows)

Check 1 If the printer is not turn on, make sure it is connected to the power supply and turn it on.

Check 2 Make sure printer is properly connected to computer.

If you are using a USB cable, make sure it is securely connected to both the printer and the computer. When the USB cable is securely plugged in, check the following:

- If you are using a relay device such as a USB hub, disconnect it, connect the printer directly to the computer, and retry the printing. If printing starts normally, there is a problem with the relay device. Contact the vendor of the relay device.
- There could also be a problem with the USB cable. Replace the USB cable and retry the printing.

If you use the printer over a LAN, make sure the printer is correctly set up for network use.

Check 3 Make sure MP Drivers are installed correctly.

Refer to Updating the Driver to uninstall unnecessary drivers and install the latest drivers.

Check 4 When printer is connected to your computer with a USB cable, check device status from your computer.

Follow the procedure below to check the device status.

1. Select **Control Panel** > **Hardware and Sound** > **Device Manager**.

   Note

   - If the **User Account Control** screen is displayed, select **Yes**.

2. Open **USB Printing Support Properties**.

   Double-click **Universal Serial Bus controllers** and **USB Printing Support**.

   Note

   - If the **USB Printing Support Properties** screen is not displayed, make sure the printer is correctly connected to the computer.

     ➡ Check 2 Make sure printer is properly connected to computer.

3. Click **General** tab and check for a device problem.

If a device error is shown, see Windows Help to resolve it.

Other Error Messages (Windows)

Check If an error message is displayed somewhere other than printer status monitor, check the following:

- **"Could not spool successfully due to insufficient disk space"**

  Delete any unnecessary files to increase the amount of free space on the disk.

- **"Could not spool successfully due to insufficient memory"**

  Close other applications to increase the available memory.

  If you still cannot print, restart your computer and retry the printing.

- **"Printer driver could not be found"**

  Refer to Updating the Driver to uninstall unnecessary drivers and install the latest drivers.

- **"Could not print Application name** - File name"

  Try printing again once the current job is complete.

Repairing Your Printer

This section describes how to transport the printer for repairing it.

Important

- You cannot take ink out of ink tanks.
- Make sure the tank caps of ink tanks are closed securely. If the tank caps are open, close the tank caps properly.
- Press the **ON** button to turn off the printer with the print heads installed. The printer protects the print heads by covering them automatically to prevent them from being dried.
- Do not remove the print heads. Doing so may cause the ink to leak.
- If the inside of the printer becomes dirty, clean with a soft cloth that gets wet with water and squeezed firmly.
- When transporting the printer, pack the printer in a plastic bag so that ink does not leak.
- Pack the printer in a sturdy box so that it is placed with its bottom facing down, using sufficient protective material to ensure safe transport.
- Do not tilt the printer; otherwise, ink may leak. When a shipping agent is handling transport of the printer, have its box marked "THIS SIDE UP" to keep the printer with its bottom facing down.
- Mark also with "FRAGILE" or "HANDLE WITH CARE".

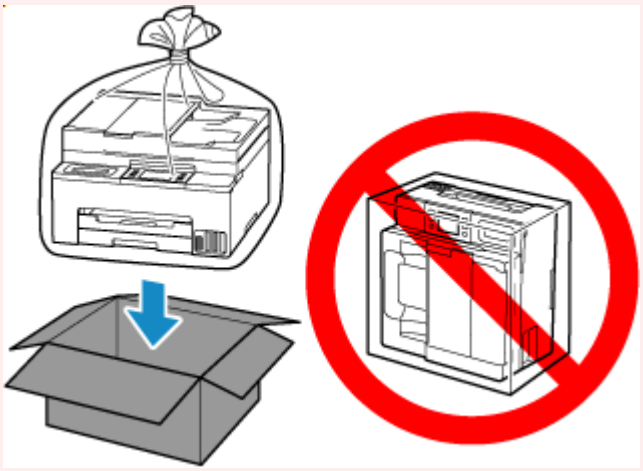

- Please handle with care and ensure the box remains flat and NOT turned upside down or on its side, as the printer may be damaged and ink in the printer may leak.

Make Sure Ink Valve is Closed

1. Make sure the status light is not lit.

If the power is on, press the **ON** button to turn off the printer.

➡ Turning the Printer On and Off

Important

- Do not unplug the printer while the status light is lit or flashing. It may cause malfunction or damage to the printer, making the printer unable to print.

2. Open scanning unit / cover.

3. Close ink valve.

Close the ink valve by tilting the ink valve lever tightly to the right.

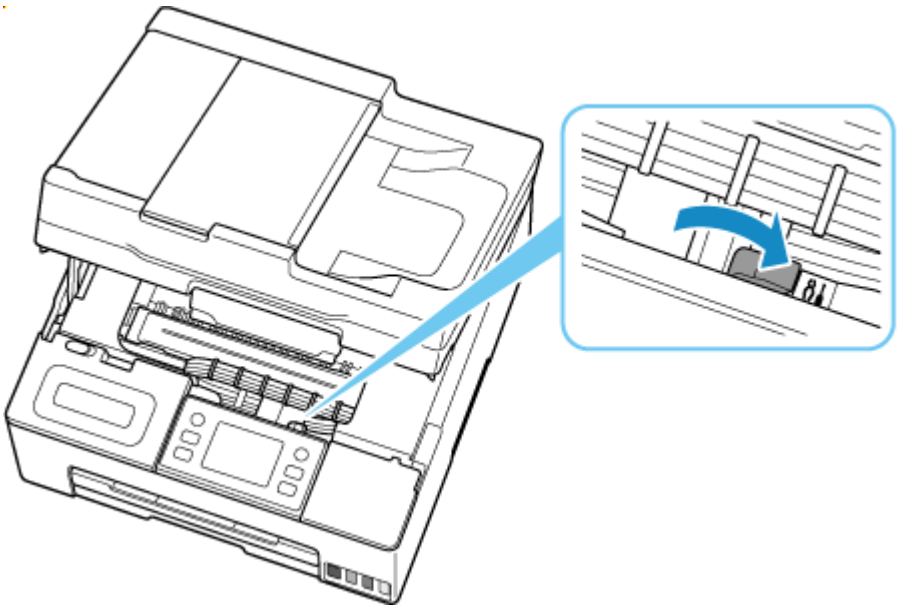

Important

- If you pack the printer without closing the ink valve, ink may leak out. Be sure to close the ink valve before packing the printer.

Note

- If the ink valve lever is already tilted to the right and the ink valve is closed, leave it in place.

4. Make sure tank caps are closed securely.

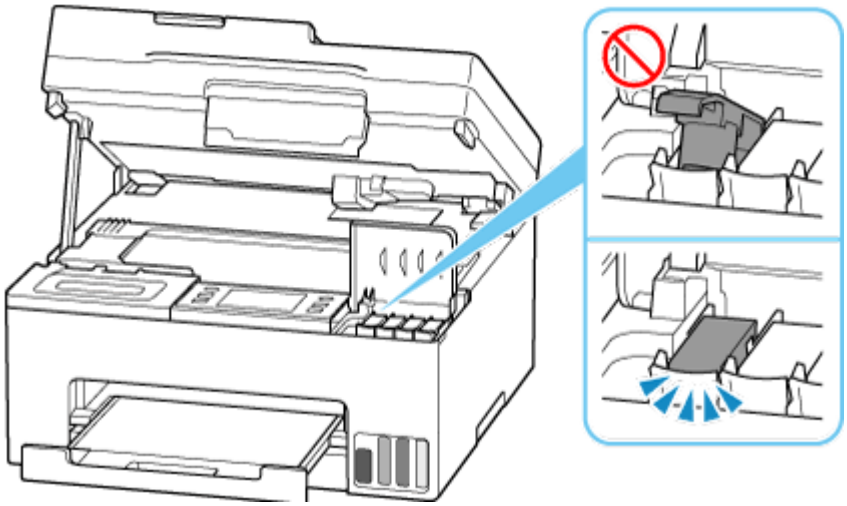

5. Close scanning unit / cover.

   Hold it up once, then take it down gently.

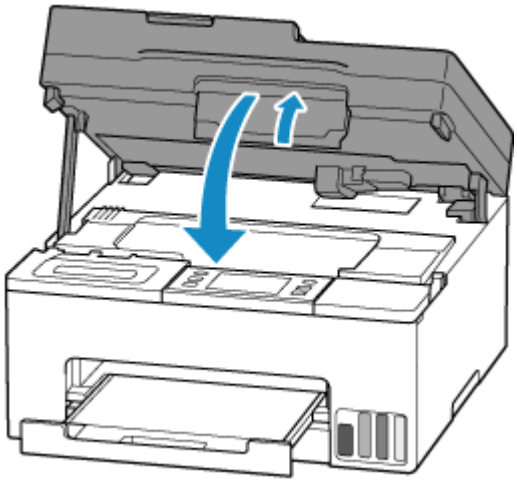

   Go to Packing Printer.

Packing Printer

1. Retract paper output tray.

2. Unplug cable and power cord.

3. Use adhesive tape to secure all covers on the printer to keep them from opening.

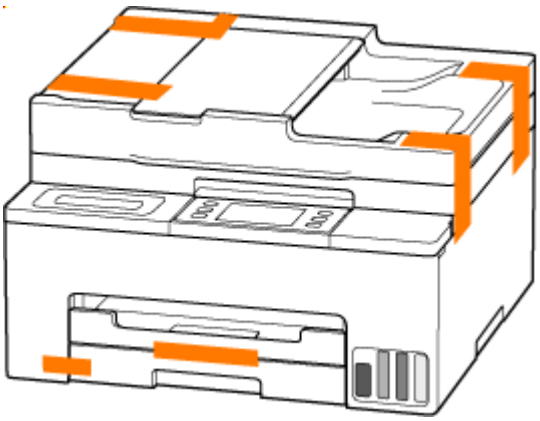

4. Pack printer in plastic bag.

   Seal the mouth of the plastic bag with the tape or tie it tightly so that ink does not leak.

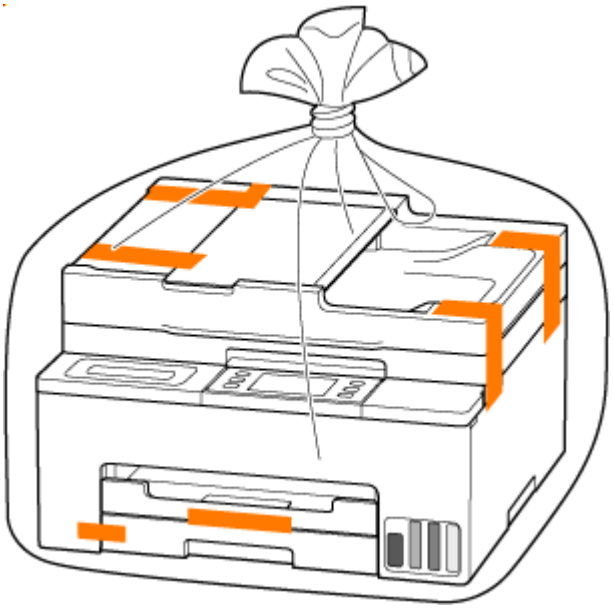

5. Pack printer in box.

   Attach the protective material to the printer to pack it securely in the box.

Important

- Carry the printer as shown in the illustration below. If you hold the cassette when carrying, the cassette may come off from the printer.

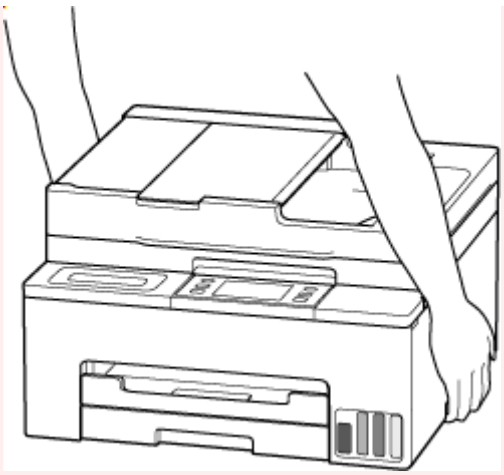

When Error Occurred

If an error occurs while printing, for example, if the paper runs out or jams, a troubleshooting message is displayed automatically. For some errors, a support code (error number) is also displayed.

Take the appropriate action described in the message.

When a Support Code and a Message are displayed on the Computer Screen (Windows):

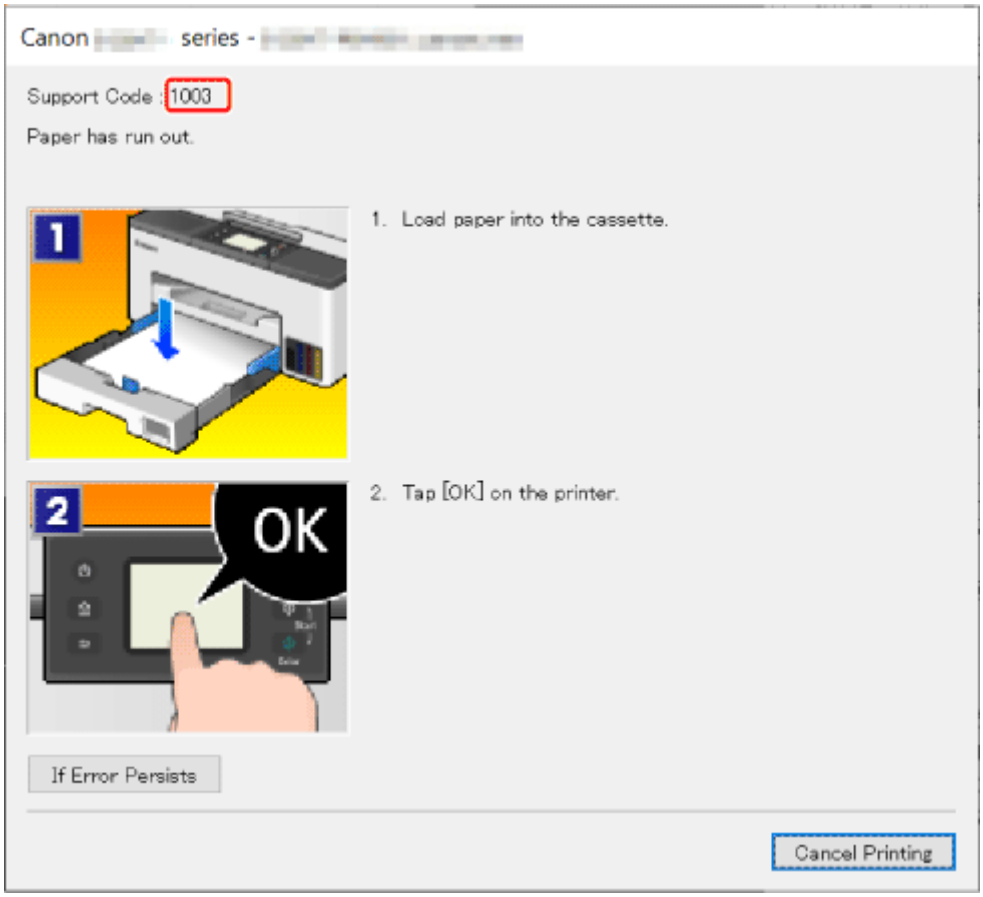

When a Support Code and a Message are displayed on the Printer's Touch Screen:

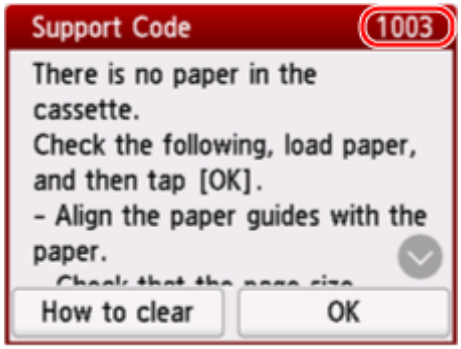

For details on how to resolve errors with Support Codes, see List of Support Codes for Printer Errors.

For details on how to resolve errors without Support Codes, see Message Is Displayed.

List of Support Codes for Printer Errors

Support codes are displayed on the printer's touch screen and your computer screen when errors occur.

A "support code" is an error number, and is displayed along with an error message.

When an error occurs, check the support code and take the appropriate action in response.

Support Codes Displayed on Printer's Touch Screen and Computer Screen

- **1000 to 1ZZZ**

  1003 1200 1215 1300 1303 1304 1309 1310 1313 1366 1367 1368

  1431 1432 1470 1471 1472 1473 1476 1496 15A1 15A2 1641 1723

  1724 1725 1726 1727 1871 1876

- **2000 to 2ZZZ**

  2110 21F0 2200 2500 2700 2801 2802 2803 2806

- **3000 to 3ZZZ**

  3252 3401 3402 3403 3404 3405 3406 3407 3408 340A 340B 340C

  3412 3413 3414 3415 3416 3417 3418 3419 3420 3421 3422 3423

  3424 3425 3434 3435 3436 3437 3438 3440 3441 3446 3447 3449

  3454 3455

- **4000 to 4ZZZ**

  4103 4104 495A

- **5000 to 5ZZZ**

  5011 5012 5040 5050 5100 5205 5206 5207 5212 5213 5400 5C00

  5C02 5C03 5C30

- **6000 to 6ZZZ**

  6000 6005 6006 6500 6503 6700 6701 6800 6801 6830 6831 6832

  6833 6900 6901 6902 6910 6920 6921 6930 6931 6932 6933 6936

  6937 6938 6939 693A 6940 6941 6942 6943 6944 6945 6946 6D01

- **7000 to 7ZZZ**

  7500 7600 7700 7800

- **9000 to 9ZZZ**

  9500

- **A000 to ZZZZ**

  B20B B509 C000 C001 C100 C101

Note

- If no support code is displayed but the paper is not fed or output normally, see What to Do If Paper Is Not Fed/Output Normally.

What to Do When Paper Is Jammed

If a paper jam occurs during printing (support code 1300/1303/1304/1313 is displayed), follow the procedure below.

Note

- If the paper is not jammed (no support code displayed) but the paper is not fed or output normally, see What to Do If Paper Is Not Fed/Output Normally.
- If the document is jammed in the ADF (Auto Document Feeder), see What to Do When Document is Jammed in ADF (Auto Document Feeder) (2801).

Important

- When checking the paper output slot / feed slot or removing any foreign objects, do not turn the printer upside down or tilt it. The ink may leak out.

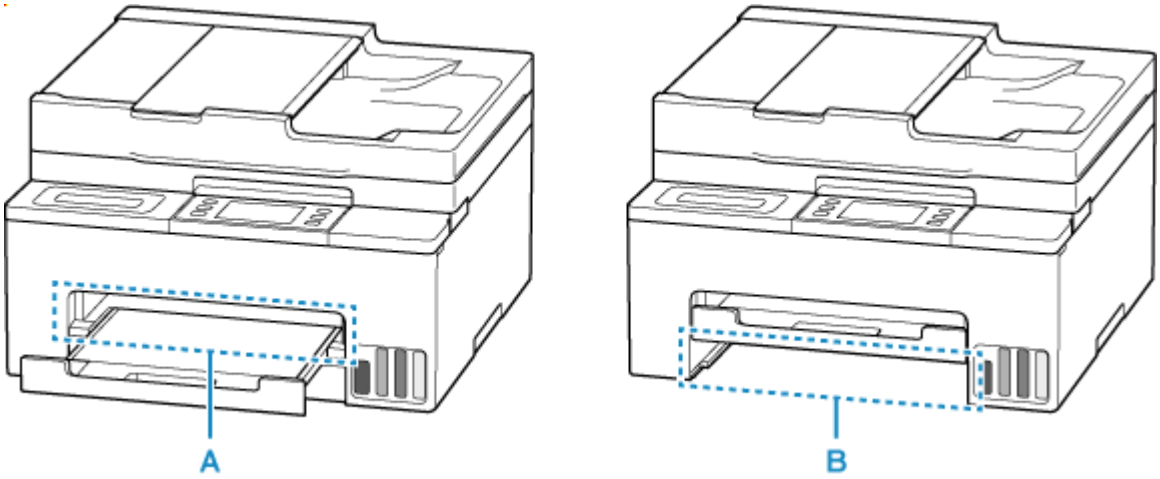

Check 1 Did you try to print on a small paper size such as **4"x6" 10x15cm** size?

➡ What to Do When Small Paper Sizes Are Jammed

Check 2 Is the jammed paper visible in the paper output slot (A)?

➡ Removing Jammed Paper through Paper Output Slot

Check 3 Is the jammed paper visible in the feed slot of the cassette (B)?

Retract the paper output tray, and then check if the jammed paper is visible in the feed slot of the cassette.

➡ Removing Jammed Paper through Feed Slot of Cassette

Check 4 If the jammed paper is not visible in the paper output slot or the feed slot.

➡ Removing Jammed Paper inside Printer

Removing Jammed Paper through Paper Output Slot

1. Hold jammed paper firmly with both hands and pull it out slowly.

Slowly pull out the paper so as not to tear it.

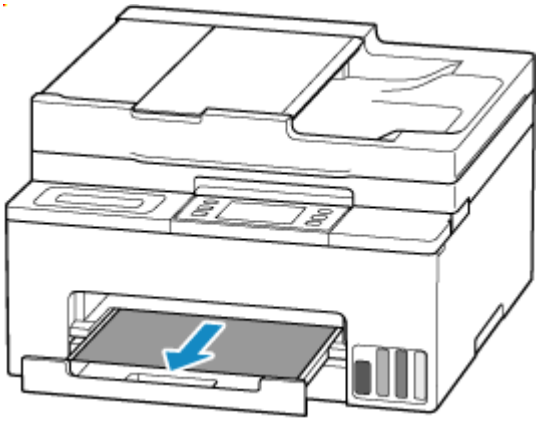

Note

- If you cannot pull out the paper, turn the printer back on without pulling forcibly. The paper may be ejected automatically.

  The printer cannot be turned off while it is sending or receiving a fax, or when the received fax or the unsent fax is stored in the printer's memory. Make sure that all faxes have been sent and received, press the printer's **Stop** button to stop printing, and then turn off the printer.
- If the paper cannot be pulled out or is torn, open the printer's scanning unit / cover and remove jammed paper inside the printer.

  ➡ Removing Jammed Paper inside Printer

2. Select **OK** on printer's touch screen.

The printer resumes printing. Reprint the page you were printing if it was not printed properly due to the paper jam.

If you turned off the printer in step 1, all jobs in the print queue are canceled. Redo the printing.

Note

- When reloading the paper, make sure you are using suitable paper and loading it correctly.

If the measures above do not solve the problem, a bit of paper may remain in the printer. See Removing Jammed Paper inside Printer.

Removing Jammed Paper through Feed Slot of Cassette

1. Hold jammed paper firmly with both hands and pull it out slowly.

Slowly pull out the paper so as not to tear it.

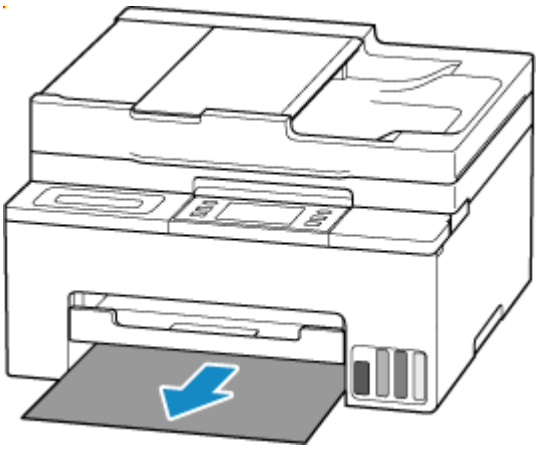

Note

- If the paper cannot be pulled out or is torn, detach the rear cover and remove the jammed paper from the rear side.

  ➡ Removing Jammed Paper from Rear Side

2. Load paper in cassette.

   ➡ Loading Plain Paper
   ➡ Loading Photo Paper
   ➡ Loading Envelopes

   Note

   - Make sure you are using suitable paper and loading it correctly.

3. Select **OK** on printer's touch screen.

   The printer resumes printing. Reprint the page you were printing if it was not printed properly due to the paper jam.

If the measures above do not solve the problem, a bit of paper may remain in the printer. See Removing Jammed Paper inside Printer.

Removing Jammed Paper inside Printer

Important

- The printer cannot be turned off while it is sending or receiving a fax, or when the received fax or the unsent fax is stored in the printer's memory. Make sure that all faxes have been sent and received, press the printer's **Stop** button to stop printing, and then turn off the printer.

1. Press printer's **Stop** button.

2. Turn off printer and unplug it.

3. Open scanning unit / cover.

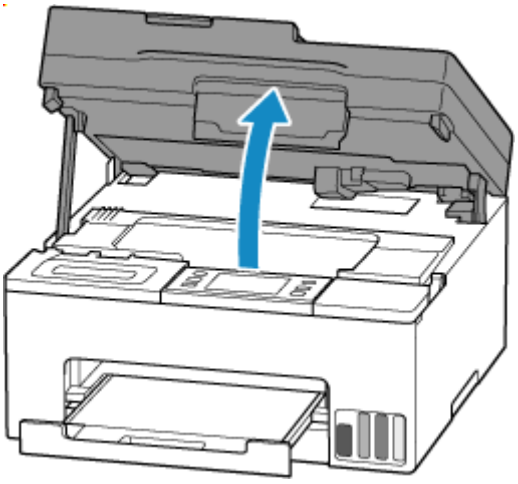

Important

- Do not touch the clear film (A), white belt (B), or tubes (C).

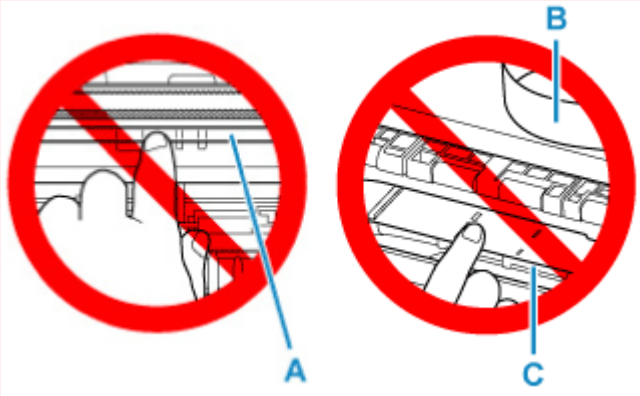

If you soil or scratch this part by touching it with paper or your hand, it could damage the printer.

4. Check if jammed paper is under print head holder.

If the jammed paper is under the print head holder, move the print head holder to the far right or left, whichever makes it easier to remove the paper.

When moving the print head holder, hold the print head holder and slide it slowly to the far right or left.

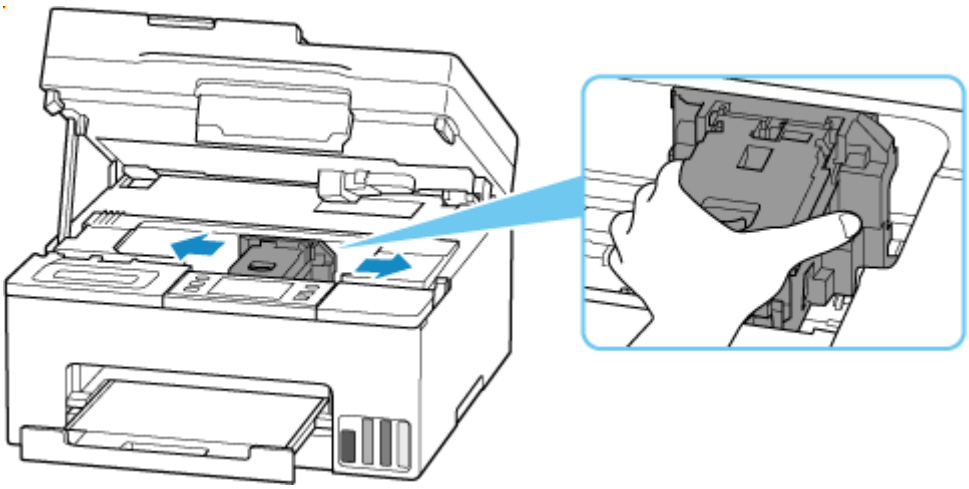

5. Hold jammed paper firmly with both hands.

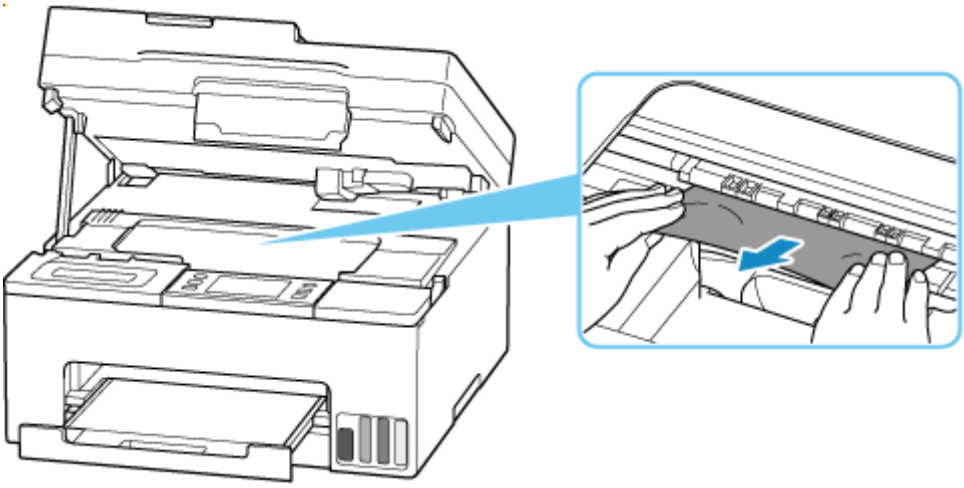

If the paper is rolled up, pull it out and grasp the edges of the paper.

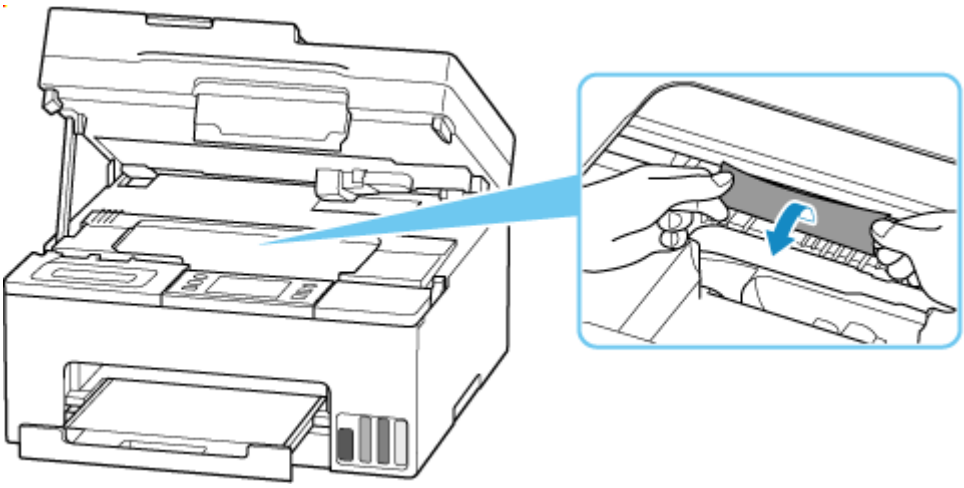

6. Slowly pull out jammed paper so as not to tear it.

Pull out the paper at an angle of about 45 degrees.

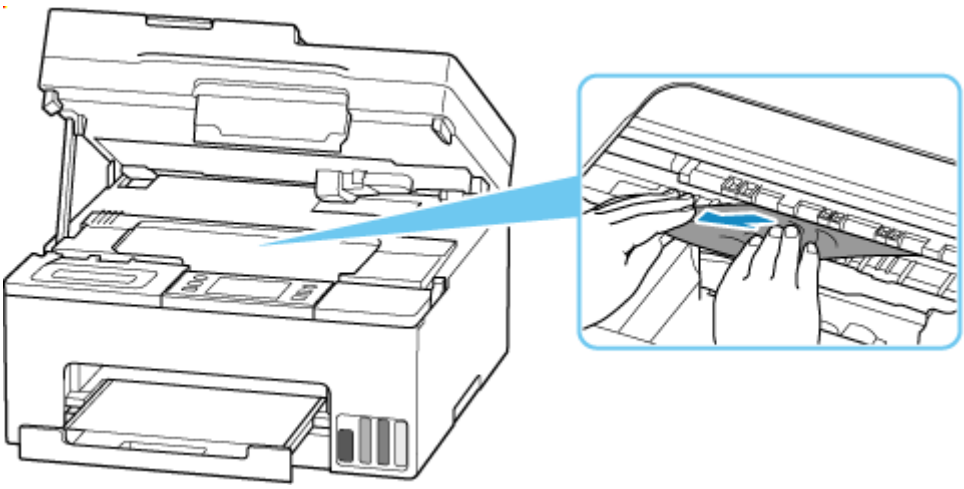

7. Make sure all jammed paper is removed.

If the paper tears when you pull out it, a bit of paper may remain in the printer. Check the following and remove any remaining paper.

- Any paper left under the print head holder?
- Any small bits of paper left in the printer?
- Any paper left in the left and right empty spaces (D) in the printer?

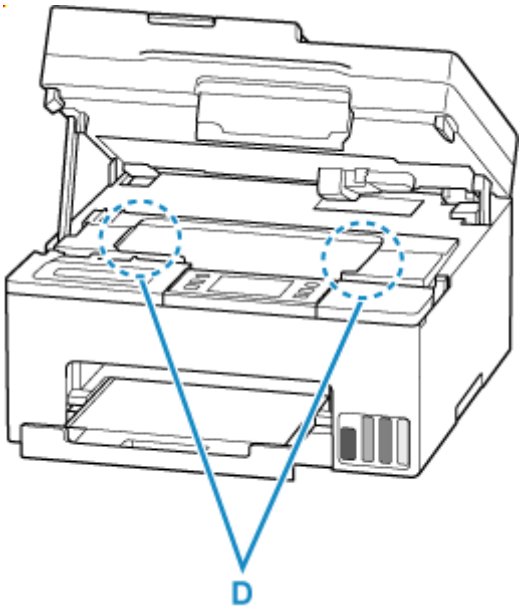

Note

- If you are unable to remove the jammed paper, detach the rear cover and remove the jammed paper from the rear side.

  ➡ Removing Jammed Paper from Rear Side

8. Close scanning unit / cover.

To close the scanning unit / cover, lift it up slightly and then lower it gently.

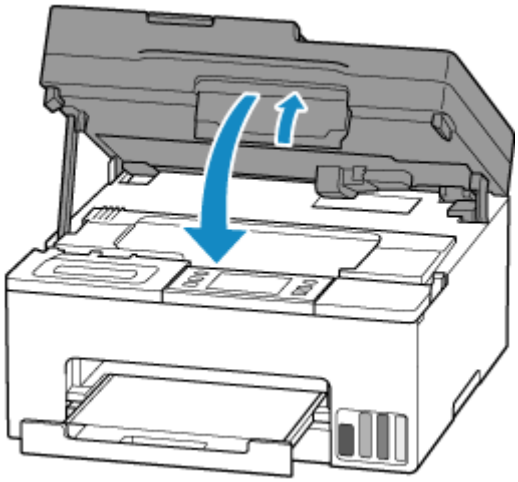

9. Plug printer back in and turn printer back on.

10. Load paper.

    - Loading Plain Paper
    - Loading Photo Paper
    - Loading Envelopes

    Note

    - Make sure you are using suitable paper and loading it correctly.

11. Redo printing.

    All jobs in the print queue are canceled. Redo the printing.

Removing Jammed Paper from Rear Side

Important

- The printer cannot be turned off while it is sending or receiving a fax, or when the received fax or the unsent fax is stored in the printer's memory. Make sure that all faxes have been sent and received, press the printer's **Stop** button to stop printing, and then turn off the printer.

1. Press printer's **Stop** button.

2. Turn off printer and unplug it.

3. Retract paper output tray.

4. Turn printer so that rear side of printer faces toward you.

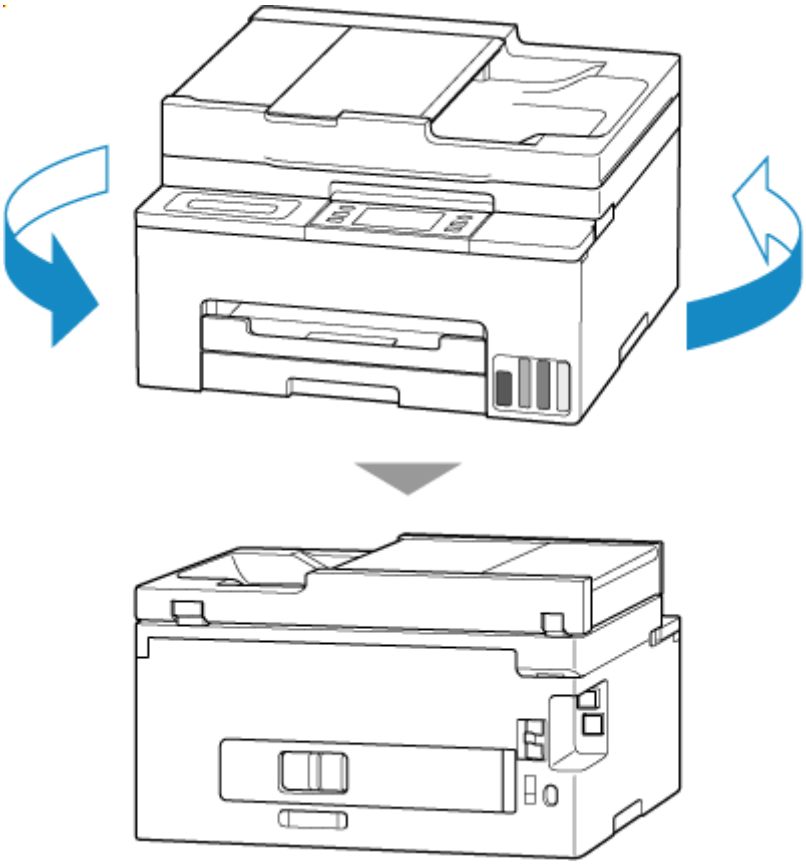

Important

- When changing the orientation of the printer, do not turn the printer upside down or tilt it. The ink may leak out.

5. Detach rear cover.

   Pull out the rear cover.

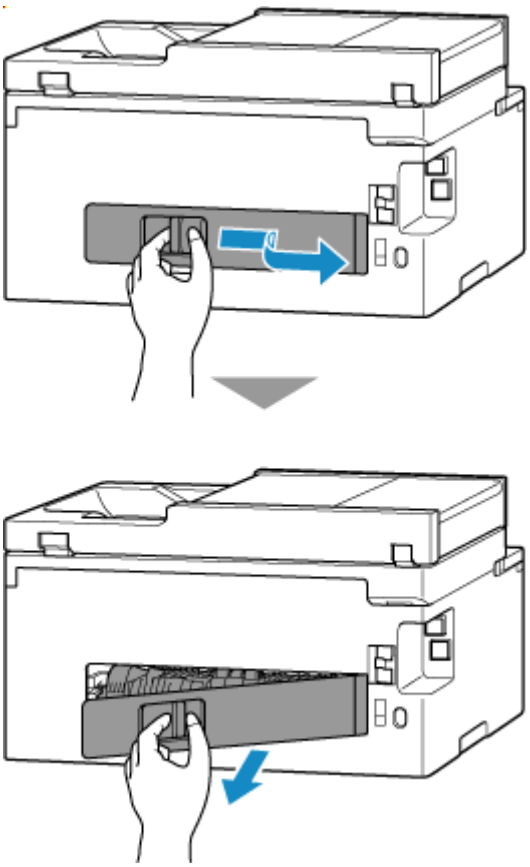

6. Hold jammed paper firmly with both hands and pull it out slowly.

   If the paper is rolled up, pull it out and grasp the edges of the paper.

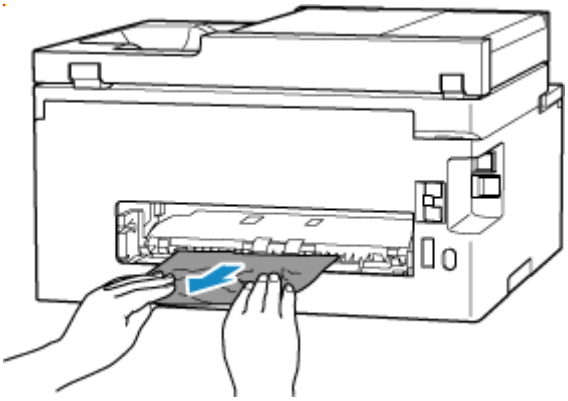

Note

- Do not touch the inner parts of the printer.

If you are unable to remove the jammed paper, follow the steps below to detach the transport unit and then remove the paper.

1. Detach transport unit.

   Lift up the transport unit and pull it out.

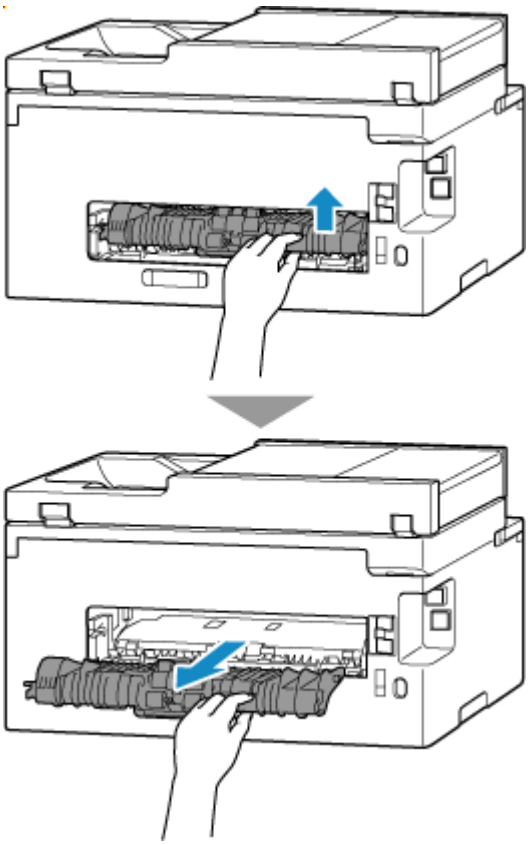

2. Slowly pull out jammed paper.

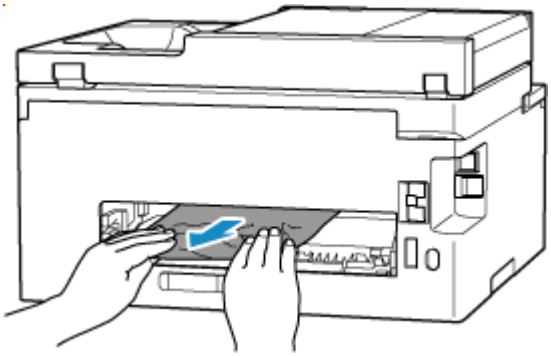

Note

- Do not touch the inner parts of the printer.

3. Make sure all jammed paper is removed.

4. If parts (A) are raised, tip them toward you.

Important

- If you replace the transport unit without lowering parts (A) toward you, it could damage the printer.

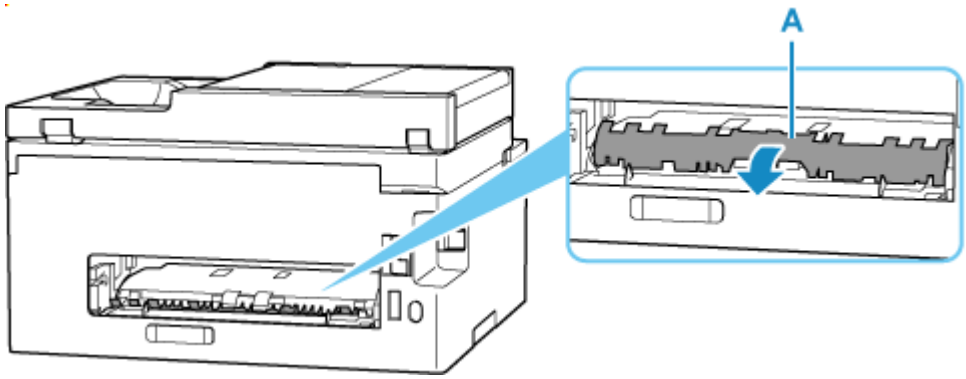

5. Replace transport unit.

Insert the transport unit until it reaches the back of the printer and clicks into place.

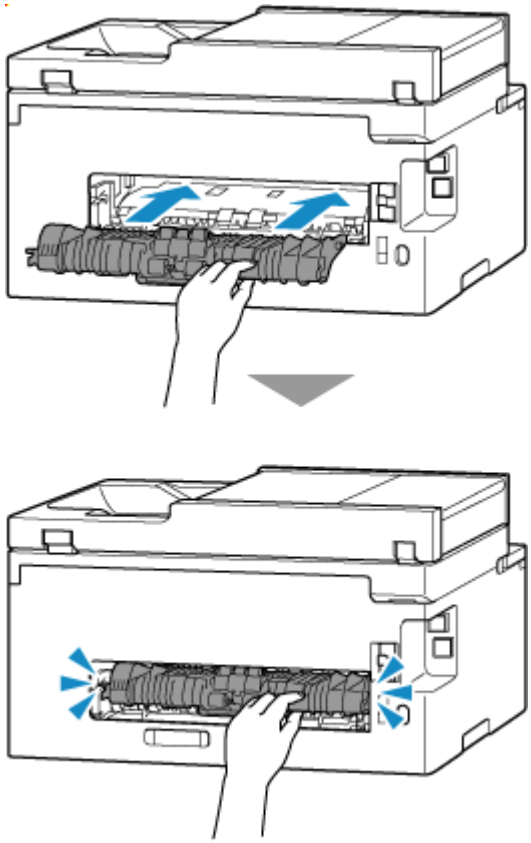

7. Attach rear cover.

Insert the projections of the right side of the rear cover into the printer, and then push the left side of the rear cover until it is closed completely.

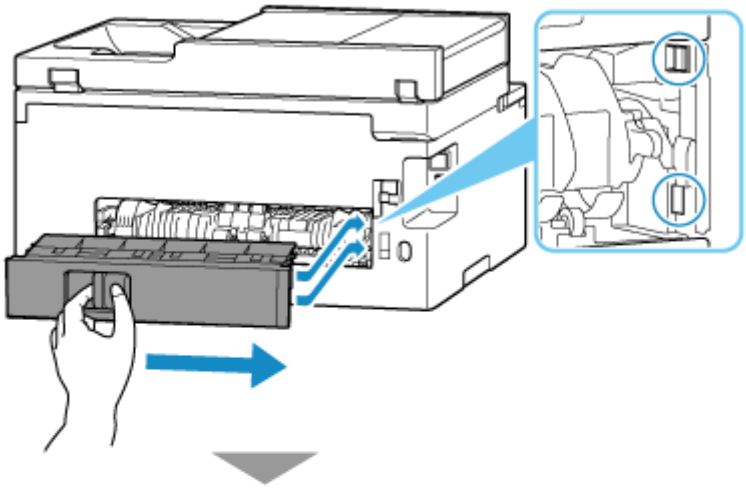

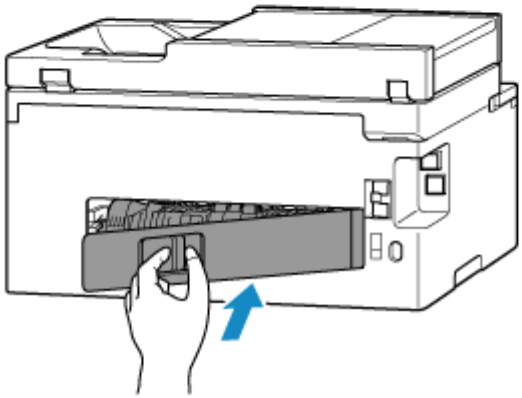

8. Plug printer back in and turn printer back on.

9. Load paper.

   - Loading Plain Paper
   - Loading Photo Paper
   - Loading Envelopes

   Note

   - Make sure you are using suitable paper and loading it correctly.

10. Redo printing.

    All jobs in the print queue are canceled. Redo the printing.

If the measures above do not solve the problem, contact your nearest Canon service center to request a repair.

Important

- Do not tilt the printer when moving it since the ink may leak out.
- When transporting the printer for repairing it, see Repairing Your Printer.

1003

Cause

Possible causes include the following.

- There is no paper in the cassette.
- Paper is not loaded in the cassette properly.

What to Do

After loading the paper in the cassette correctly, follow the messages displayed on the printer's touch screen.

➡ Loading Plain Paper
➡ Loading Photo Paper
➡ Loading Envelopes

Note

- This error may occur if the transport unit is not installed correctly. Refer to the following page to check the transport unit.

  ➡ Removing Jammed Paper from Rear Side

1200

Cause

Scanning unit / cover is open.

What to Do

Close the scanning unit / cover and wait for a while.

Make sure to close the scanning unit / cover after refilling ink or other operations.

1368

Cause

Replace Ink in Print Head cannot be performed because the maintenance cartridge is almost full.

What to Do

To perform Replace Ink in Print Head, first turn off the printer and then replace the maintenance cartridge.

➡ Replacing the Maintenance Cartridge

Tap the printer's **OK** button to clear the error message.

1496

Cause

The maintenance cartridge may not be installed properly or may not be compatible with this printer.

What to Do

Remove the maintenance cartridge, and then reinstall it correctly.

Refer to Replacing the Maintenance Cartridge for details on removing and installing the maintenance cartridge.

1723

Cause

The maintenance cartridge is not installed.

What to Do

Install the maintenance cartridge.

Refer to Replacing the Maintenance Cartridge for details on installing the maintenance cartridge.

1724

Cause

The currently installed maintenance cartridge cannot be used.

This printer cannot use maintenance cartridges that have been installed in other printers.

What to Do

Replace with a new maintenance cartridge.

➡ Replacing the Maintenance Cartridge

1725

Cause

The maintenance cartridge may not be installed properly or may not be compatible with this printer.

What to Do

Remove the maintenance cartridge, and then reinstall it correctly.

Refer to Replacing the Maintenance Cartridge for details on removing and installing the maintenance cartridge.

1726

Cause

The maintenance cartridge is full.

What to Do

Replace the maintenance cartridge.

➡ Replacing the Maintenance Cartridge

The condition of the maintenance cartridge when this error is displayed will depend on where and how the printer is used.

When this message is displayed, you must replace the maintenance cartridge.

1727

Cause

The maintenance cartridge is almost full.

What to Do

The printer will not be able to print with a full maintenance cartridge.

Tap the printer's **OK** button to cancel the error and then prepare a new maintenance cartridge.

For details on the maintenance cartridge, see Replacing the Maintenance Cartridge.

Cassette Is Not Installed (1876)

Cause

Possible causes include the following.

- The cassette is not installed.
- The cassette is not pushed all the way into the printer.

What to Do

After loading the paper in the cassette and installing the cassette in the printer, follow the messages displayed on the printer's touch screen.

Important

- Align the paper guides of the cassette with both edges of the paper.

  Push the cassette all the way into the printer.

  Load the paper correctly and install the cassette correctly, referring to Loading Plain Paper.

2110

Cause

An incompatible print setting combination has been specified for the paper loaded in the cassette.

Note

- To disable notifications for this error, disable the function to detect paper setting mismatch.

What to Do

To specify the appropriate print settings for the paper loaded in the cassette and retry printing/copying, follow the steps below.

1. Select **Next**.

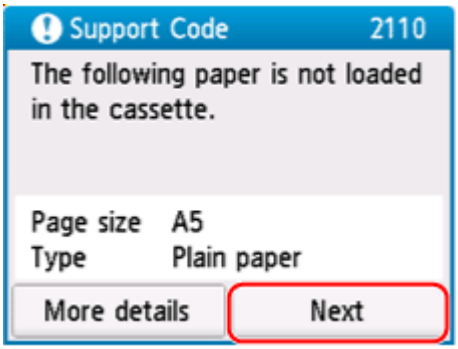

2. Select **Cancel print**.

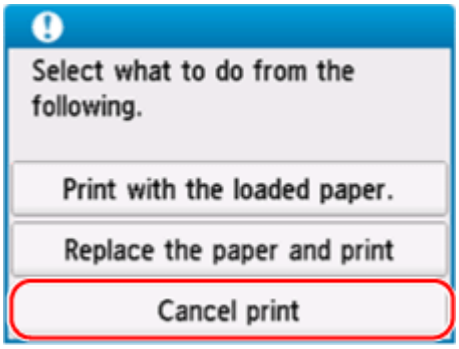

3. Reinstall cassette into printer.

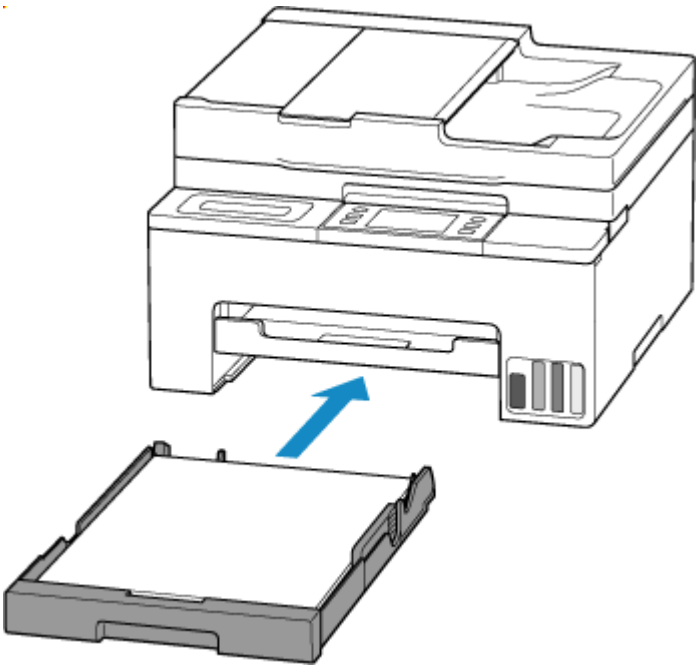

4. Check paper information (paper size and media type).

   The paper information is used to specify the print settings in step 5.

   Check the paper information (paper size and media type) and select **Yes**.

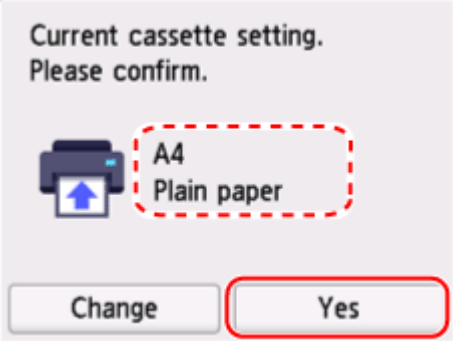

5. Specify paper information (paper size and media type).

   - When copying:

     1. Select **Settings**.

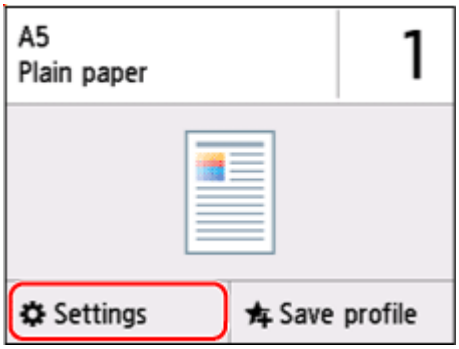

2. Specify paper information (paper size and media type) that you checked in step 4.

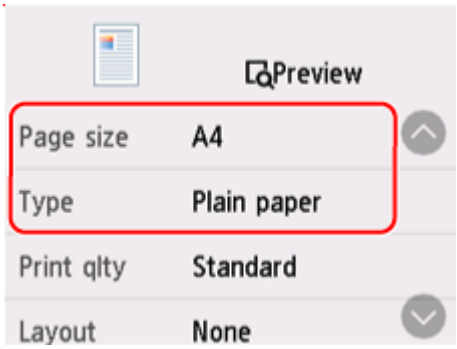

Note

- For the proper combination of paper size and media type, see below.
  - ➡ Paper Settings on the Printer Driver and the Printer (Paper Size)
  - ➡ Paper Settings on the Printer Driver and the Printer (Media Type)

6. Redo printing/copying.

Other Measures

Load paper specified in print settings

To replace the paper in the cassette with paper suitable for the print settings and continue printing/copying, follow the steps below.

1. Check print settings, and select **Next**.

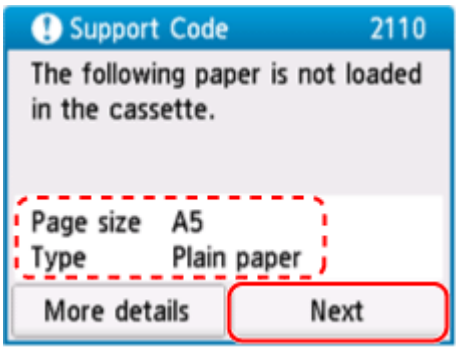

2. Select **Replace the paper and print**.

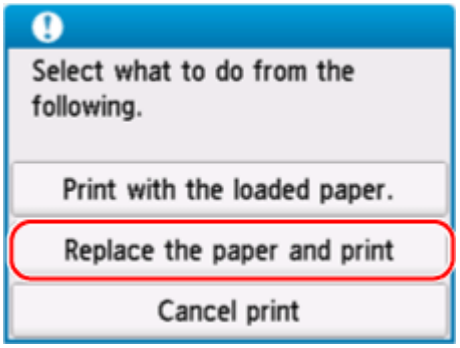

3. Load paper specified in print settings into cassette.

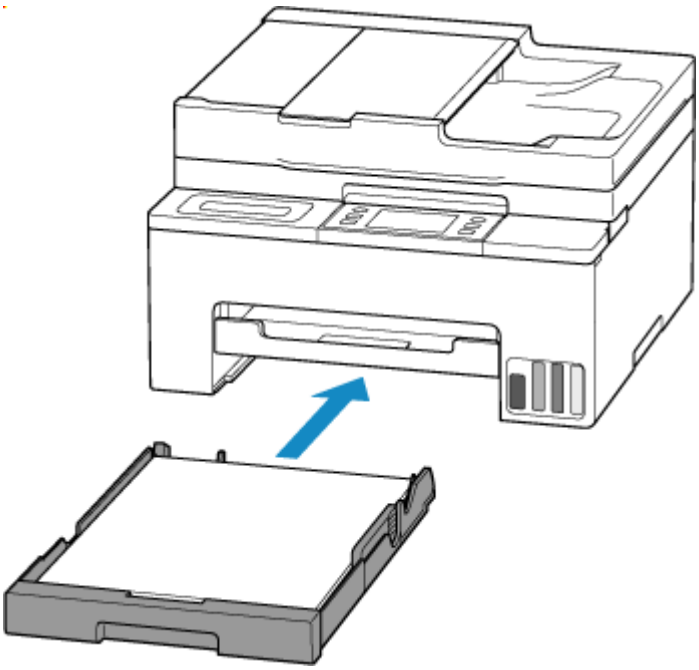

4. Check paper information (paper size and media type).

Confirm that the paper information displayed matches the print settings, and then select **Yes**.

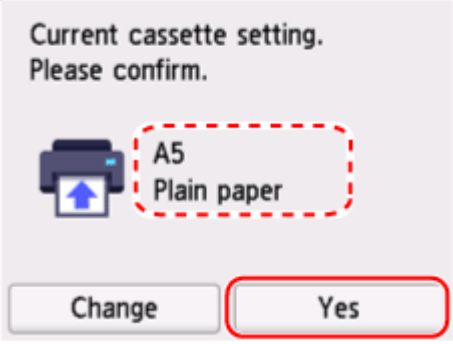

Print without changing paper and print settings

For example, to continue printing/copying with a mismatch between the paper loaded in the cassette and the paper information registered in the printer, follow the steps below.

Important

- The printed result may not be the intended color or size.

1. Select **Next**.

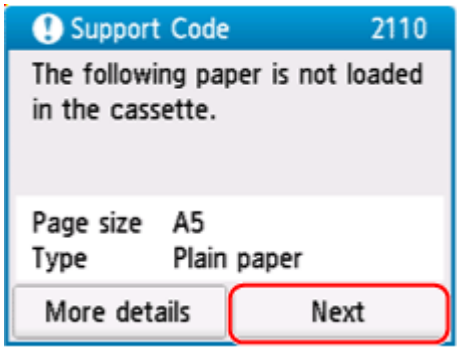

2. Select **Print with the loaded paper.**.

Note

- Depending on your printer's settings, **Print with the loaded paper.** may not be displayed.

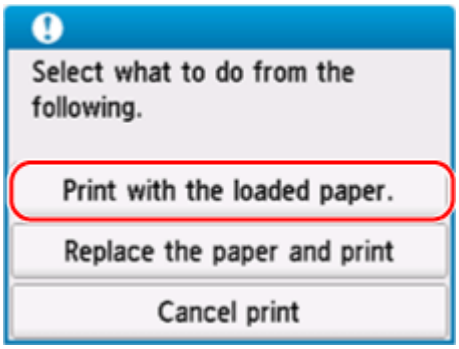

Disable notifications for 2110 error

To disable the function to detect paper setting mismatch, follow the steps below.

1. Select (**Setup**) on printer's **HOME** screen.

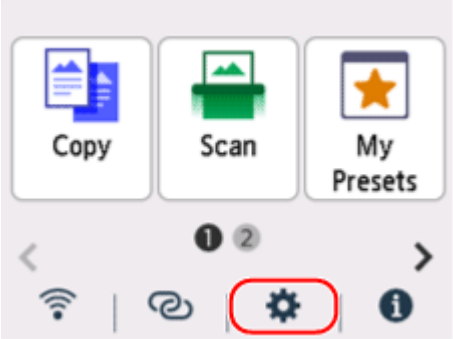

2. Select **Feed settings**.

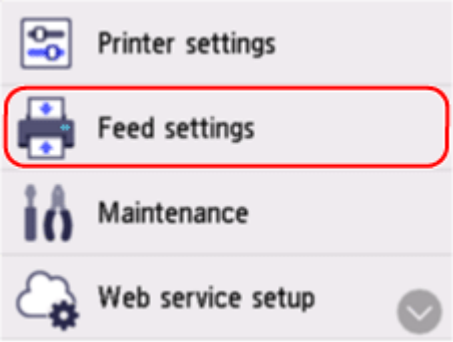

3. Select **Paper settings mismatch (Copy)** or **Paper settings mismatch (Other)**.

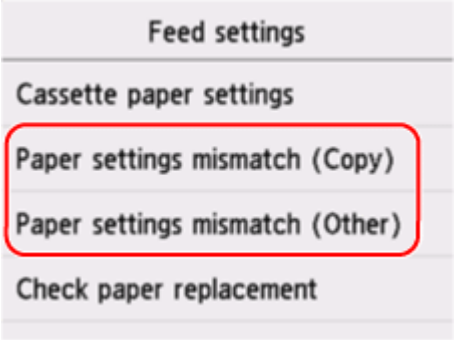

4. Select **Disable**.

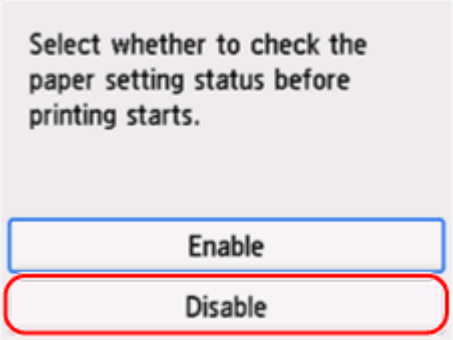

2200

Cause

An internal part will need replacing soon.

What to Do

Select **OK** on the printer's touch screen to cancel the error.

You cannot replace the internal parts of the printer yourself. Contact your nearest Canon service center to request a repair as soon as possible.

Important

- Do not tilt the printer when moving it since the ink may leak out.
- When transporting the printer for repair, see Repairing Your Printer.

3252

Cause

The maintenance cartridge is almost full.

What to Do

The printer will not be able to print with a full maintenance cartridge.

Tap the printer's **OK** button to clear the error message.

4103

Cause

Cannot perform printing with current print settings.

What to Do

Press the printer's **Stop** button to cancel printing.

Change the print settings (paper size and media type specified when printing) and retry printing.

5100

Cause

Printer error has occurred.

What to Do

Cancel printing and turn off the printer.

Check the following:

- Make sure print head holder motion is not impeded by protective material, jammed paper, etc.

  Remove any impediment.

  Important

  - When clearing an impediment to print head holder motion, be careful not to touch clear film (A), white belt (B), or tubes (C).

    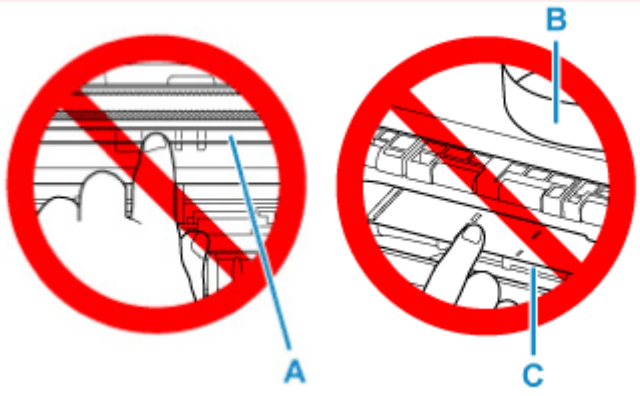

    If you soil or scratch this part by touching it with paper or your hand, it could damage the printer.

Turn the printer back on.

If this does not solve the problem, contact your nearest Canon service center to request a repair.

Important

- Do not tilt the printer when moving it since the ink may leak out.
- When transporting the printer for repairing it, see Repairing Your Printer.

5212

Cause

Printer error has occurred.

What to Do

1. Turn off printer and unplug it.
2. Plug in printer again and turn it back on.
3. Perform **Replace Ink in Print Head** for **BK**.

   ➡ Perform Replace Ink in Print Head

If the error recurs after taking the above actions, you may be able to resolve it by replacing the print heads.

For details, click here.

Important

- If the error recurs after replacing the print heads, contact your nearest Canon service center to request a repair.
- Do not tilt the printer when moving it since the ink may leak out.
- When transporting the printer for repairing it, see Repairing Your Printer.

5213

Cause

Printer error has occurred.

What to Do

1. Turn off printer and unplug it.
2. Plug in printer again and turn it back on.
3. Perform **Replace Ink in Print Head** for **Color**.

   ➡ Perform Replace Ink in Print Head

If the error recurs after taking the above actions, you may be able to resolve it by replacing the print heads.

For details, click here.

Important

- If the error recurs after replacing the print heads, contact your nearest Canon service center to request a repair.
- Do not tilt the printer when moving it since the ink may leak out.
- When transporting the printer for repairing it, see Repairing Your Printer.

6000

Cause

Printer error has occurred.

What to Do

Turn off the printer and unplug it.

Plug in the printer again and turn it back on.

If this does not solve the problem, contact your nearest Canon service center to request a repair.

Important

- Do not tilt the printer when moving it since the ink may leak out.
- When transporting the printer for repairing it, see Repairing Your Printer.

Message Is Displayed

This section describes some of the messages.

If a message is displayed on the printer's touch screen, see below.

➡ Message Is Displayed on Printer's Touch Screen

If a message is displayed on the computer, see below.

➡ Error Regarding Automatic 2-sided Printing Is Displayed
➡ Error Regarding Power Cord Being Unplugged Is Displayed (Windows)
➡ Writing Error/Output Error/Communication Error (Windows)
➡ Other Error Messages (Windows)

Message Is Displayed on Printer's Touch Screen

Check the message and take appropriate action.

- **Power was not turned off correctly the last time. Press the ⏻ button when turning power off.**

  The printer may have been unplugged while the power was still on.

  Select **OK** on the printer's touch screen to cancel the error.

  Refer to Turning the Printer On and Off for the correct way to turn the power off.

- **Cannot connect to the server. Please wait a while and try again.**

  The printer cannot connect to the server due to a communication error.

  Select **OK** on the printer's touch screen to cancel the error and try again after a while.

- **Check the page size and tap [OK].**

  The size of the loaded paper is different from the paper size set in **Fax paper settings**.

  Select **OK** on the printer's touch screen to cancel the error.

  Select **Function list** in **Fax**, check **Page size**, **Type** and **Paper src** in **Fax paper settings**, and then reload the paper accordingly.

- **Replace the receiver.**

  The handset is not placed in the handset cradle correctly.

  Replace the handset correctly.

Note

- See Message for Faxing Is Displayed on Fax Standby Screen for the message displayed on the fax standby screen.

Error Regarding Automatic 2-sided Printing Is Displayed

Check See Automatic 2-sided Printing Problems and take the appropriate action.

Error Regarding Power Cord Being Unplugged Is Displayed (Windows)

The printer may have been unplugged while it was on.

Check the error message displayed on the computer and click **OK**.

The printer starts printing.

Refer to Turning the Printer On and Off for the correct way to turn the power off.

Writing Error/Output Error/Communication Error (Windows)

Check 1 If the printer is not turn on, make sure it is connected to the power supply and turn it on.

Check 2 Make sure printer is properly connected to computer.

If you are using a USB cable, make sure it is securely connected to both the printer and the computer. When the USB cable is securely plugged in, check the following:

- If you are using a relay device such as a USB hub, disconnect it, connect the printer directly to the computer, and retry the printing. If printing starts normally, there is a problem with the relay device. Contact the vendor of the relay device.
- There could also be a problem with the USB cable. Replace the USB cable and retry the printing.

If you use the printer over a LAN, make sure the printer is correctly set up for network use.

Check 3 Make sure MP Drivers are installed correctly.

Refer to Updating the Driver to uninstall unnecessary drivers and install the latest drivers.

Check 4 When printer is connected to your computer with a USB cable, check device status from your computer.

Follow the procedure below to check the device status.

1. Select **Control Panel** > **Hardware and Sound** > **Device Manager**.

   Note

   - If the **User Account Control** screen is displayed, select **Yes**.

2. Open **USB Printing Support Properties**.

   Double-click **Universal Serial Bus controllers** and **USB Printing Support**.

   Note

   - If the **USB Printing Support Properties** screen is not displayed, make sure the printer is correctly connected to the computer.

     ➡ Check 2 Make sure printer is properly connected to computer.

3. Click **General** tab and check for a device problem.

If a device error is shown, see Windows Help to resolve it.

Other Error Messages (Windows)

Check If an error message is displayed somewhere other than printer status monitor, check the following:

- **"Could not spool successfully due to insufficient disk space"**

  Delete any unnecessary files to increase the amount of free space on the disk.

- **"Could not spool successfully due to insufficient memory"**

  Close other applications to increase the available memory.

  If you still cannot print, restart your computer and retry the printing.

- **"Printer driver could not be found"**

  Refer to Updating the Driver to uninstall unnecessary drivers and install the latest drivers.

- **"Could not print Application name** - File name"

  Try printing again once the current job is complete.