Canon

TS9500 series

Online Manual

English

Contents

Using Online Manual. 10

Symbols Used in This Document. 11

Touch-enabled Device Users (Windows). 12

Trademarks and Licenses. 13

Basic Operation. 28

Printing Photos from a Computer. 29

Printing Photos from a Smartphone/Tablet. 34

Copying. 38

Printing Photos from Memory Card. 43

Printing a Disc Label from a Computer. 47

Copying a Disc Label. 54

Network. 60

Restrictions. 63

Network Connection Tips. 65

Default Network Settings. 66

Detect Same Printer Name. 68

Connects to Another Computer via LAN/Changes from USB to LAN Connection. 69

Printing Network Settings. 70

Reconfiguration Method of LAN Connection/Reconfiguration Method of Wi-Fi Connection. 76

IJ Network Device Setup Utility (macOS). 78

IJ Network Device Setup Utility. 79

Starting Up IJ Network Device Setup Utility. 80

Diagnosing and Repairing Network Settings. 81

List of Models Which Does Not Support Diagnosis and Repair Function. 82

Handling Paper, Originals, Ink Tanks, Multi-purpose Tray, Memory Card, etc.. 83

Loading Paper. 84

Paper Sources. 85

Loading Paper in the Rear Tray. 86

Loading Paper in the Cassette. 91

Loading Envelopes in Rear Tray. 96

Placing Multi-purpose Tray. 101
Cautions When Printing with Multi-purpose Tray. 102
Placing a Printable Disc. 103
Before Placing a Printable Disc. 104
Placing a Printable Disc. 105
Removing a Printable Disc. 109
Placing Printable Nail Stickers. 111
Before Placing Printable Nail Stickers. 112
Placing Printable Nail Stickers. 113
Removing Printable Nail Stickers. 116
How to Detach / Attach Multi-purpose Tray. 118
Loading Originals. 120
Where to Load Originals. 121
Loading Originals on Platen. 122
Loading Documents in the ADF (Auto Document Feeder). 124
Loading Based on Use. 126
Supported Originals. 129
Inserting the Memory Card. 131
Before Inserting the Memory Card. 132
Inserting the Memory Card. 134
Removing the Memory Card. 136
Replacing Ink Tanks. 137
Replacing Ink Tanks. 138
Checking Ink Status on the Touch Screen. 143
Ink Tips. 144
If Printing Is Faint or Uneven. 145
Maintenance Procedure. 146
Printing the Nozzle Check Pattern. 149
Examining the Nozzle Check Pattern. 151
Cleaning the Print Head. 153
Deep Print Head Cleaning. 155
Aligning the Print Head. 157
Aligning the Print Head Manually. 159
Performing Maintenance Functions from Your Computer (macOS). 164

Opening Remote UI for Maintenance. 165
Cleaning the Print Heads. 166
Adjusting Print Head Position. 168
Checking Ink Status from Your Computer. 169
Cleaning. 170
Cleaning Paper Feed Rollers. 171
Cleaning Inside the Printer (Bottom Plate Cleaning). 173
Overview. 176
Safety. 177
Safety Precautions. 178
Regulatory Information. 181
WEEE (EU&EEA). 183
Handling Precautions. 194
Legal Restrictions on Scanning/Copying. 195
Transporting Your Printer. 196
When Repairing, Lending, or Disposing of the Printer. 197
Keeping Print Quality High. 198
Main Components and Their Use. 199
Main Components. 200
Front View. 201
Rear View. 204
Inside View. 205
Operation Panel. 206
Power Supply. 207
Checking that Power Is On. 208
Turning the Printer On and Off. 209
Checking the Power Plug/Power Cord. 211
Unplugging the Printer. 212
Using the Operation Panel. 213
Changing Settings. 218
Changing Printer Settings from Your Computer (macOS). 219
Managing the Printer Power. 220
Changing the Printer Operation Mode. 221

Changing Settings from Operation Panel. 222
Changing Settings from Operation Panel. 223
Setting Items on Operation Panel. 225
Print settings. 226
LAN settings. 227
Other device settings. 233
Language selection. 235
Firmware update. 236
Reset setting. 237
Feed settings. 238
Web service setup. 239
ECO settings. 240
Quiet setting. 242
System information. 243
Specifications. 244
Information about Paper. 249
Supported Media Types. 250
Paper Load Limit. 253
Unsupported Media Types. 255
Handling Paper. 256
Printing. 257
Printing from Computer. 258
Printing from Application Software (macOS AirPrint). 259
Printing. 260
Printing on Postcards. 263
Adding Printer. 265
How to Open Printer Settings Screen. 266
Displaying the Printing Status Screen. 267
Deleting the Undesired Print Job. 268
Removing Printer That Is No Longer Required from List of Printers. 269
Printing Using Canon Application Software. 270
Printing Using a Web Service. 271
Printing from Smartphone/Tablet. 272
Printing/Scanning with Wireless Direct. 273

Printing Photo Data. 278
Printing Photographs Saved on Memory Card. 279
Setting Items for Photo Printing Using Operation Panel. 284
Disc Label Printing. 287
Copying Label Side of Disc. 288
Printing Photo from Memory Card onto Disc Label. 291
Paper Settings. 294
Copying. 298
Making Copies. 299
Setting Items for Copying. 302
Scanning. 305
Scanning from Computer (macOS). 306
Scanning According to Item Type or Purpose (IJ Scan Utility Lite). 307
IJ Scan Utility Lite Features. 308
Scanning Easily (Auto Scan). 310
Scanning Documents and Photos. 312
Scanning Tips. 313
Positioning Originals (Scanning from Computer). 314
Scanning Using Smartphone/Tablet. 319
Frequently Asked Questions. 320
Network Settings and Common Problems. 322
Network Communication Problems. 325
Cannot Find Printer on Network. 326
Cannot Find Printer on Check Printer Settings Screen During Setup (Windows). 327
Cannot Find Printer on Check Printer Settings Screen During Wi-Fi Setup (Windows)-Checking Power Status. 329
Cannot Find Printer on Check Printer Settings Screen During Wi-Fi Setup (Windows)-Checking PC Network Connection. 330
Cannot Find Printer on Check Printer Settings Screen During Wi-Fi Setup (Windows)-Checking Printer's Wi-Fi Settings. 331
Cannot Find Printer on Check Printer Settings Screen During Wi-Fi Setup (Windows)-Checking Wi-Fi Environment. 332

Cannot Find Printer on Check Printer Settings Screen During Wi-Fi Setup (Windows)-Checking Printer's IP Address. 334
Cannot Find Printer on Check Printer Settings Screen During Wi-Fi Setup (Windows)-Checking Security Software Settings. 335
Cannot Find Printer on Check Printer Settings Screen During Wi-Fi Setup (Windows)-Checking Wireless Router Settings. 336
Cannot Find Printer on Check Printer Settings Screen During Wired LAN Setup (Windows)-Checking LAN Cable and Router. 337
Cannot Find Printer on Check Printer Settings Screen During Wired LAN Setup (Windows)-Checking PC Network Connection. 338
Cannot Find Printer on Check Printer Settings Screen During Wired LAN Setup (Windows)-Checking Printer's Wired LAN Settings. 339
Cannot Find Printer on Check Printer Settings Screen During Wired LAN Setup (Windows)-Checking Printer's IP Address. 340
Cannot Find Printer on Check Printer Settings Screen During Wired LAN Setup (Windows)-Checking Security Software Settings. 341
Cannot Find Printer on Check Printer Settings Screen During Wired LAN Setup (Windows)-Checking Router Settings. 342
Cannot Proceed beyond Printer Connection Screen. 343
Cannot Find Printer while Using Wi-Fi. 345
Network Connection Problems. 348
Printer Suddenly Stopped Working for Some Reason. 349
Network Key (Password) Unknown. 354
Printer Cannot Be Used After Replacing Wireless Router or Changed Router Settings. 356
Other Network Problems. 358
Checking Network Information. 359
Restoring to Factory Defaults. 362
Problems while Printing/Scanning from Smartphone/Tablet. 363
Cannot Print/Scan from Smartphone/Tablet. 364
Printing Problems. 368
Printer Does Not Print. 369
Ink Does Not Come Out. 372
Paper Does Not Feed Properly/"No Paper" Error. 373
Cannot Print on the Disc Label. 376
Printout Results Are Unsatisfactory. 378
Printouts Are Blank/Blurry or Fuzzy/Inaccurate or Bleeding Colors/Streaks or Lines. 380
Lines Are Misaligned/Distorted. 383

Paper Is Smudged / Printed Surface Is Scratched. 384
Vertical Line Next to Image. 388
Scanning Problems (macOS). 389
Scanning Problems. 390
Scanner Does Not Work. 391
Scanner Driver Does Not Start. 392
Mechanical Problems. 393
Printer Does Not Turn On. 394
Printer Turns Off Unexpectedly or Repeatedly. 395
USB Connection Problems. 397
Cannot Communicate with Printer via USB. 398
Wrong Language Appears in Touch Screen. 399
Installation and Download Problems. 400
Failed to MP Drivers Installation (Windows). 401
Updating MP Drivers in Network Environment (Windows). 403
Errors and Messages. 404
An Error Occurs. 405
Message (Support Code) Appears. 406
List of Support Code for Error. 409
List of Support Code for Error (Paper Jams). 411
1300. 412
1303. 414
1304. 415
1313. 416
Paper Is Jammed inside Printer. 417
Removing Jammed Paper from Rear Side. 420
1000. 424
1003. 425
1200. 426
1401. 427
1600. 428
1660. 429
1688. 430

1689. 431
1700. 432
1890. 433
2110. 434
4103. 437
5011. 438
5012. 439
5100. 440
5200. 441
5B00. 442
6000. 443
C000. 444

Using Online Manual

- Operating Environment
- Symbols Used in This Document
- Touch-enabled Device Users (Windows)
- Printing Online Manual
- Trademarks and Licenses
- Screenshots in This Manual

Symbols Used in This Document

Warning

Instructions that, if ignored, could result in death, serious personal injury, or property damage caused by incorrect operation of the equipment. These must be observed for safe operation.

Caution

Instructions that, if ignored, could result in personal injury or property damage caused by incorrect operation of the equipment. These must be observed for safe operation.

Important

Instructions including important information that must be observed to avoid damage and injury or improper use of the product. Be sure to read these instructions.

Note

Instructions including notes for operation and additional explanations.

Basics

Instructions explaining basic operations of your product.

Note

- Icons may vary depending on your product.

Touch-enabled Device Users (Windows)

For touch actions, you need to replace "right-click" in this document with the action set on the operating system. For example, if the action is set to "press and hold" on your operating system, replace "right-click" with "press and hold."

Trademarks and Licenses

- Microsoft is a registered trademark of Microsoft Corporation.
- Windows is a trademark or registered trademark of Microsoft Corporation in the U.S. and/or other countries.
- Windows Vista is a trademark or registered trademark of Microsoft Corporation in the U.S. and/or other countries.
- Internet Explorer is a trademark or registered trademark of Microsoft Corporation in the U.S. and/or other countries.
- Mac, Mac OS, macOS, OS X, AirPort, App Store, AirPrint, the AirPrint logo, Safari, Bonjour, iPad, iPhone and iPod touch are trademarks of Apple Inc., registered in the U.S. and other countries.
- IOS is a trademark or registered trademark of Cisco in the U.S. and other countries and is used under license.
- Google Cloud Print, Google Chrome, Chrome OS, Chromebook, Android, Google Drive, Google Apps and Google Analytics are either registered trademarks or trademarks of Google Inc. Google Play and Google Play Logo are trademarks of Google LLC.
- Adobe, Acrobat, Flash, Photoshop, Photoshop Elements, Lightroom, Adobe RGB and Adobe RGB (1998) are either registered trademarks or trademarks of Adobe Systems Incorporated in the United States and/or other countries.
- Bluetooth is a trademark of Bluetooth SIG, Inc., U.S.A. and licensed to Canon Inc.
- Autodesk and AutoCAD are registered trademarks or trademarks of Autodesk, Inc., and/or its subsidiaries and/or affiliates in the USA and/or other countries.

Note

- The formal name of Windows Vista is Microsoft Windows Vista operating system.

Copyright (c) 2003-2015 Apple Inc. All rights reserved.

Redistribution and use in source and binary forms, with or without modification, are permitted provided that the following conditions are met:

1. Redistributions of source code must retain the above copyright notice, this list of conditions and the following disclaimer.
2. Redistributions in binary form must reproduce the above copyright notice, this list of conditions and the following disclaimer in the documentation and/or other materials provided with the distribution.
3. Neither the name of Apple Inc. ("Apple") nor the names of its contributors may be used to endorse or promote products derived from this software without specific prior written permission.

THIS SOFTWARE IS PROVIDED BY APPLE AND ITS CONTRIBUTORS "AS IS" AND ANY EXPRESS OR IMPLIED WARRANTIES, INCLUDING, BUT NOT LIMITED TO, THE IMPLIED WARRANTIES OF MERCHANTABILITY AND FITNESS FOR A PARTICULAR PURPOSE ARE DISCLAIMED. IN NO EVENT SHALL APPLE OR ITS CONTRIBUTORS BE LIABLE FOR ANY DIRECT, INDIRECT, INCIDENTAL, SPECIAL, EXEMPLARY, OR CONSEQUENTIAL DAMAGES (INCLUDING, BUT NOT LIMITED TO, PROCUREMENT OF SUBSTITUTE GOODS OR SERVICES; LOSS OF USE, DATA, OR PROFITS; OR BUSINESS INTERRUPTION) HOWEVER CAUSED AND ON ANY THEORY OF LIABILITY, WHETHER IN CONTRACT, STRICT LIABILITY, OR TORT (INCLUDING NEGLIGENCE OR OTHERWISE) ARISING IN ANY WAY OUT OF THE USE OF THIS SOFTWARE, EVEN IF ADVISED OF THE POSSIBILITY OF SUCH DAMAGE.

Apache License

Version 2.0, January 2004

http://www.apache.org/licenses/

TERMS AND CONDITIONS FOR USE, REPRODUCTION, AND DISTRIBUTION

1. Definitions.

   "License" shall mean the terms and conditions for use, reproduction, and distribution as defined by Sections 1 through 9 of this document.

   "Licensor" shall mean the copyright owner or entity authorized by the copyright owner that is granting the License.

   "Legal Entity" shall mean the union of the acting entity and all other entities that control, are controlled by, or are under common control with that entity. For the purposes of this definition, "control" means (i) the power, direct or indirect, to cause the direction or management of such entity, whether by contract or otherwise, or (ii) ownership of fifty percent (50%) or more of the outstanding shares, or (iii) beneficial ownership of such entity.

   "You" (or "Your") shall mean an individual or Legal Entity exercising permissions granted by this License.

   "Source" form shall mean the preferred form for making modifications, including but not limited to software source code, documentation source, and configuration files.

   "Object" form shall mean any form resulting from mechanical transformation or translation of a Source form, including but not limited to compiled object code, generated documentation, and conversions to other media types.

   "Work" shall mean the work of authorship, whether in Source or Object form, made available under the License, as indicated by a copyright notice that is included in or attached to the work (an example is provided in the Appendix below).

   "Derivative Works" shall mean any work, whether in Source or Object form, that is based on (or derived from) the Work and for which the editorial revisions, annotations, elaborations, or other modifications represent, as a whole, an original work of authorship. For the purposes of this License, Derivative Works shall not include works that remain separable from, or merely link (or bind by name) to the interfaces of, the Work and Derivative Works thereof.

   "Contribution" shall mean any work of authorship, including the original version of the Work and any modifications or additions to that Work or Derivative Works thereof, that is intentionally submitted to Licensor for inclusion in the Work by the copyright owner or by an individual or Legal Entity authorized to submit on behalf of the copyright owner. For the purposes of this definition, "submitted" means any form of electronic, verbal, or written communication sent to the Licensor or its representatives, including but not limited to communication on electronic mailing lists, source code control systems, and issue tracking systems that are managed by, or on behalf of, the Licensor for the purpose of discussing and improving the Work, but excluding communication that is conspicuously marked or otherwise designated in writing by the copyright owner as "Not a Contribution."

   "Contributor" shall mean Licensor and any individual or Legal Entity on behalf of whom a Contribution has been received by Licensor and subsequently incorporated within the Work.

2. Grant of Copyright License. Subject to the terms and conditions of this License, each Contributor hereby grants to You a perpetual, worldwide, non-exclusive, no-charge, royalty-free, irrevocable copyright license to reproduce, prepare Derivative Works of, publicly display, publicly perform, sublicense, and distribute the Work and such Derivative Works in Source or Object form.
3. Grant of Patent License. Subject to the terms and conditions of this License, each Contributor hereby grants to You a perpetual, worldwide, non-exclusive, no-charge, royalty-free, irrevocable (except as stated in this section) patent license to make, have made, use, offer to sell, sell, import, and otherwise transfer the Work, where such license applies only to those patent claims licensable by such Contributor that are necessarily infringed by their Contribution(s) alone or by combination of their Contribution(s) with the Work to which such Contribution(s) was submitted. If You institute patent litigation against any entity (including a cross-claim or counterclaim in a lawsuit) alleging that the Work or a Contribution incorporated within the Work constitutes direct or contributory patent infringement, then any patent licenses granted to You under this License for that Work shall terminate as of the date such litigation is filed.
4. Redistribution. You may reproduce and distribute copies of the Work or Derivative Works thereof in any medium, with or without modifications, and in Source or Object form, provided that You meet the following conditions:

    1. You must give any other recipients of the Work or Derivative Works a copy of this License; and
    2. You must cause any modified files to carry prominent notices stating that You changed the files; and
    3. You must retain, in the Source form of any Derivative Works that You distribute, all copyright, patent, trademark, and attribution notices from the Source form of the Work, excluding those notices that do not pertain to any part of the Derivative Works; and
    4. If the Work includes a "NOTICE" text file as part of its distribution, then any Derivative Works that You distribute must include a readable copy of the attribution notices contained within such NOTICE file, excluding those notices that do not pertain to any part of the Derivative Works, in at least one of the following places: within a NOTICE text file distributed as part of the Derivative Works; within the Source form or documentation, if provided along with the Derivative Works; or, within a display generated by the Derivative Works, if and wherever such third-party notices normally appear. The contents of the NOTICE file are for informational purposes only and do not modify the License. You may add Your own attribution notices within Derivative Works that You distribute, alongside or as an addendum to the NOTICE text from the Work, provided that such additional attribution notices cannot be construed as modifying the License.

    You may add Your own copyright statement to Your modifications and may provide additional or different license terms and conditions for use, reproduction, or distribution of Your modifications, or for any such Derivative Works as a whole, provided Your use, reproduction, and distribution of the Work otherwise complies with the conditions stated in this License.

5. Submission of Contributions. Unless You explicitly state otherwise, any Contribution intentionally submitted for inclusion in the Work by You to the Licensor shall be under the terms and conditions of this License, without any additional terms or conditions. Notwithstanding the above, nothing herein shall supersede or modify the terms of any separate license agreement you may have executed with Licensor regarding such Contributions.
6. Trademarks. This License does not grant permission to use the trade names, trademarks, service marks, or product names of the Licensor, except as required for reasonable and customary use in describing the origin of the Work and reproducing the content of the NOTICE file.

7. Disclaimer of Warranty. Unless required by applicable law or agreed to in writing, Licensor provides the Work (and each Contributor provides its Contributions) on an "AS IS" BASIS, WITHOUT WARRANTIES OR CONDITIONS OF ANY KIND, either express or implied, including, without limitation, any warranties or conditions of TITLE, NON-INFRINGEMENT, MERCHANTABILITY, or FITNESS FOR A PARTICULAR PURPOSE. You are solely responsible for determining the appropriateness of using or redistributing the Work and assume any risks associated with Your exercise of permissions under this License.
8. Limitation of Liability. In no event and under no legal theory, whether in tort (including negligence), contract, or otherwise, unless required by applicable law (such as deliberate and grossly negligent acts) or agreed to in writing, shall any Contributor be liable to You for damages, including any direct, indirect, special, incidental, or consequential damages of any character arising as a result of this License or out of the use or inability to use the Work (including but not limited to damages for loss of goodwill, work stoppage, computer failure or malfunction, or any and all other commercial damages or losses), even if such Contributor has been advised of the possibility of such damages.
9. Accepting Warranty or Additional Liability. While redistributing the Work or Derivative Works thereof, You may choose to offer, and charge a fee for, acceptance of support, warranty, indemnity, or other liability obligations and/or rights consistent with this License. However, in accepting such obligations, You may act only on Your own behalf and on Your sole responsibility, not on behalf of any other Contributor, and only if You agree to indemnify, defend, and hold each Contributor harmless for any liability incurred by, or claims asserted against, such Contributor by reason of your accepting any such warranty or additional liability.
END OF TERMS AND CONDITIONS

---- Part 1: CMU/UCD copyright notice: (BSD like) -----

Copyright 1989, 1991, 1992 by Carnegie Mellon University

Derivative Work - 1996, 1998-2000

Copyright 1996, 1998-2000 The Regents of the University of California

All Rights Reserved

Permission to use, copy, modify and distribute this software and its documentation for any purpose and without fee is hereby granted, provided that the above copyright notice appears in all copies and that both that copyright notice and this permission notice appear in supporting documentation, and that the name of CMU and The Regents of the University of California not be used in advertising or publicity pertaining to distribution of the software without specific written permission.

CMU AND THE REGENTS OF THE UNIVERSITY OF CALIFORNIA DISCLAIM ALL WARRANTIES WITH REGARD TO THIS SOFTWARE, INCLUDING ALL IMPLIED WARRANTIES OF MERCHANTABILITY AND FITNESS. IN NO EVENT SHALL CMU OR THE REGENTS OF THE UNIVERSITY OF CALIFORNIA BE LIABLE FOR ANY SPECIAL, INDIRECT OR CONSEQUENTIAL DAMAGES OR ANY DAMAGES WHATSOEVER RESULTING FROM THE LOSS OF USE, DATA OR PROFITS, WHETHER IN AN ACTION OF CONTRACT, NEGLIGENCE OR OTHER TORTIOUS ACTION, ARISING OUT OF OR IN CONNECTION WITH THE USE OR PERFORMANCE OF THIS SOFTWARE.

---- Part 2: Networks Associates Technology, Inc copyright notice (BSD) -----

Copyright (c) 2001-2003, Networks Associates Technology, Inc

All rights reserved.

Redistribution and use in source and binary forms, with or without modification, are permitted provided that the following conditions are met:

* Redistributions of source code must retain the above copyright notice, this list of conditions and the following disclaimer.
* Redistributions in binary form must reproduce the above copyright notice, this list of conditions and the following disclaimer in the documentation and/or other materials provided with the distribution.
* Neither the name of the Networks Associates Technology, Inc nor the names of its contributors may be used to endorse or promote products derived from this software without specific prior written permission.

THIS SOFTWARE IS PROVIDED BY THE COPYRIGHT HOLDERS AND CONTRIBUTORS ``AS IS'' AND ANY EXPRESS OR IMPLIED WARRANTIES, INCLUDING, BUT NOT LIMITED TO, THE IMPLIED WARRANTIES OF MERCHANTABILITY AND FITNESS FOR A PARTICULAR PURPOSE ARE DISCLAIMED. IN NO EVENT SHALL THE COPYRIGHT HOLDERS OR CONTRIBUTORS BE LIABLE FOR ANY DIRECT, INDIRECT, INCIDENTAL, SPECIAL, EXEMPLARY, OR CONSEQUENTIAL DAMAGES (INCLUDING, BUT NOT LIMITED TO, PROCUREMENT OF SUBSTITUTE GOODS OR SERVICES; LOSS OF USE, DATA, OR PROFITS; OR BUSINESS INTERRUPTION) HOWEVER CAUSED AND ON ANY THEORY OF LIABILITY, WHETHER IN CONTRACT, STRICT LIABILITY, OR TORT (INCLUDING NEGLIGENCE OR OTHERWISE) ARISING IN ANY WAY OUT OF THE USE OF THIS SOFTWARE, EVEN IF ADVISED OF THE POSSIBILITY OF SUCH DAMAGE.

---- Part 3: Cambridge Broadband Ltd. copyright notice (BSD) -----

Portions of this code are copyright (c) 2001-2003, Cambridge Broadband Ltd.

All rights reserved.

Redistribution and use in source and binary forms, with or without modification, are permitted provided that the following conditions are met:

* Redistributions of source code must retain the above copyright notice, this list of conditions and the following disclaimer.
* Redistributions in binary form must reproduce the above copyright notice, this list of conditions and the following disclaimer in the documentation and/or other materials provided with the distribution.
* The name of Cambridge Broadband Ltd. may not be used to endorse or promote products derived from this software without specific prior written permission.

THIS SOFTWARE IS PROVIDED BY THE COPYRIGHT HOLDER ``AS IS'' AND ANY EXPRESS OR IMPLIED WARRANTIES, INCLUDING, BUT NOT LIMITED TO, THE IMPLIED WARRANTIES OF MERCHANTABILITY AND FITNESS FOR A PARTICULAR PURPOSE ARE DISCLAIMED. IN NO EVENT SHALL THE COPYRIGHT HOLDER BE LIABLE FOR ANY DIRECT, INDIRECT, INCIDENTAL, SPECIAL, EXEMPLARY, OR CONSEQUENTIAL DAMAGES (INCLUDING, BUT NOT LIMITED TO, PROCUREMENT OF SUBSTITUTE GOODS OR SERVICES; LOSS OF USE, DATA, OR PROFITS; OR BUSINESS INTERRUPTION) HOWEVER CAUSED AND ON ANY THEORY OF LIABILITY, WHETHER IN CONTRACT, STRICT LIABILITY, OR TORT (INCLUDING NEGLIGENCE OR OTHERWISE) ARISING IN ANY WAY OUT OF THE USE OF THIS SOFTWARE, EVEN IF ADVISED OF THE POSSIBILITY OF SUCH DAMAGE.

---- Part 4: Sun Microsystems, Inc. copyright notice (BSD) -----

Copyright c 2003 Sun Microsystems, Inc., 4150 Network Circle, Santa Clara, California 95054, U.S.A. All rights reserved.

Use is subject to license terms below.

This distribution may include materials developed by third parties.

Sun, Sun Microsystems, the Sun logo and Solaris are trademarks or registered trademarks of Sun Microsystems, Inc. in the U.S. and other countries.

Redistribution and use in source and binary forms, with or without modification, are permitted provided that the following conditions are met:

* Redistributions of source code must retain the above copyright notice, this list of conditions and the following disclaimer.
* Redistributions in binary form must reproduce the above copyright notice, this list of conditions and the following disclaimer in the documentation and/or other materials provided with the distribution.
* Neither the name of the Sun Microsystems, Inc. nor the names of its contributors may be used to endorse or promote products derived from this software without specific prior written permission.

THIS SOFTWARE IS PROVIDED BY THE COPYRIGHT HOLDERS AND CONTRIBUTORS ``AS IS'' AND ANY EXPRESS OR IMPLIED WARRANTIES, INCLUDING, BUT NOT LIMITED TO, THE IMPLIED WARRANTIES OF MERCHANTABILITY AND FITNESS FOR A PARTICULAR PURPOSE ARE DISCLAIMED. IN NO EVENT SHALL THE COPYRIGHT HOLDERS OR CONTRIBUTORS BE LIABLE FOR ANY DIRECT, INDIRECT, INCIDENTAL, SPECIAL, EXEMPLARY, OR CONSEQUENTIAL DAMAGES (INCLUDING, BUT NOT LIMITED TO, PROCUREMENT OF SUBSTITUTE GOODS OR SERVICES; LOSS OF USE, DATA, OR PROFITS; OR BUSINESS INTERRUPTION) HOWEVER CAUSED AND ON ANY THEORY OF LIABILITY, WHETHER IN CONTRACT, STRICT LIABILITY, OR TORT (INCLUDING NEGLIGENCE OR OTHERWISE) ARISING IN ANY WAY OUT OF THE USE OF THIS SOFTWARE, EVEN IF ADVISED OF THE POSSIBILITY OF SUCH DAMAGE.

---- Part 5: Sparta, Inc copyright notice (BSD) -----

Copyright (c) 2003-2012, Sparta, Inc

All rights reserved.

Redistribution and use in source and binary forms, with or without modification, are permitted provided that the following conditions are met:

* Redistributions of source code must retain the above copyright notice, this list of conditions and the following disclaimer.
* Redistributions in binary form must reproduce the above copyright notice, this list of conditions and the following disclaimer in the documentation and/or other materials provided with the distribution.
* Neither the name of Sparta, Inc nor the names of its contributors may be used to endorse or promote products derived from this software without specific prior written permission.

THIS SOFTWARE IS PROVIDED BY THE COPYRIGHT HOLDERS AND CONTRIBUTORS ``AS IS'' AND ANY EXPRESS OR IMPLIED WARRANTIES, INCLUDING, BUT NOT LIMITED TO, THE IMPLIED WARRANTIES OF MERCHANTABILITY AND FITNESS FOR A PARTICULAR PURPOSE ARE DISCLAIMED. IN NO EVENT SHALL THE COPYRIGHT HOLDERS OR CONTRIBUTORS BE LIABLE FOR ANY DIRECT, INDIRECT, INCIDENTAL, SPECIAL, EXEMPLARY, OR CONSEQUENTIAL DAMAGES (INCLUDING, BUT NOT LIMITED TO, PROCUREMENT OF SUBSTITUTE GOODS OR SERVICES; LOSS OF USE, DATA, OR PROFITS; OR BUSINESS INTERRUPTION) HOWEVER CAUSED AND ON ANY THEORY OF LIABILITY, WHETHER IN CONTRACT, STRICT LIABILITY, OR

TORT (INCLUDING NEGLIGENCE OR OTHERWISE) ARISING IN ANY WAY OUT OF THE USE OF THIS SOFTWARE, EVEN IF ADVISED OF THE POSSIBILITY OF SUCH DAMAGE.

---- Part 6: Cisco/BUPTNIC copyright notice (BSD) -----

Copyright (c) 2004, Cisco, Inc and Information Network Center of Beijing University of Posts and Telecommunications.

All rights reserved.

Redistribution and use in source and binary forms, with or without modification, are permitted provided that the following conditions are met:

* Redistributions of source code must retain the above copyright notice, this list of conditions and the following disclaimer.
* Redistributions in binary form must reproduce the above copyright notice, this list of conditions and the following disclaimer in the documentation and/or other materials provided with the distribution.
* Neither the name of Cisco, Inc, Beijing University of Posts and Telecommunications, nor the names of their contributors may be used to endorse or promote products derived from this software without specific prior written permission.

THIS SOFTWARE IS PROVIDED BY THE COPYRIGHT HOLDERS AND CONTRIBUTORS ``AS IS'' AND ANY EXPRESS OR IMPLIED WARRANTIES, INCLUDING, BUT NOT LIMITED TO, THE IMPLIED WARRANTIES OF MERCHANTABILITY AND FITNESS FOR A PARTICULAR PURPOSE ARE DISCLAIMED. IN NO EVENT SHALL THE COPYRIGHT HOLDERS OR CONTRIBUTORS BE LIABLE FOR ANY DIRECT, INDIRECT, INCIDENTAL, SPECIAL, EXEMPLARY, OR CONSEQUENTIAL DAMAGES (INCLUDING, BUT NOT LIMITED TO, PROCUREMENT OF SUBSTITUTE GOODS OR SERVICES; LOSS OF USE, DATA, OR PROFITS; OR BUSINESS INTERRUPTION) HOWEVER CAUSED AND ON ANY THEORY OF LIABILITY, WHETHER IN CONTRACT, STRICT LIABILITY, OR TORT (INCLUDING NEGLIGENCE OR OTHERWISE) ARISING IN ANY WAY OUT OF THE USE OF THIS SOFTWARE, EVEN IF ADVISED OF THE POSSIBILITY OF SUCH DAMAGE.

---- Part 7: Fabasoft R&D Software GmbH & Co KG copyright notice (BSD) -----

Copyright (c) Fabasoft R&D Software GmbH & Co KG, 2003 oss@fabasoft.com

Author: Bernhard Penz <bernhard.penz@fabasoft.com>

Redistribution and use in source and binary forms, with or without modification, are permitted provided that the following conditions are met:

* Redistributions of source code must retain the above copyright notice, this list of conditions and the following disclaimer.
* Redistributions in binary form must reproduce the above copyright notice, this list of conditions and the following disclaimer in the documentation and/or other materials provided with the distribution.
* The name of Fabasoft R&D Software GmbH & Co KG or any of its subsidiaries, brand or product names may not be used to endorse or promote products derived from this software without specific prior written permission.

THIS SOFTWARE IS PROVIDED BY THE COPYRIGHT HOLDER ``AS IS'' AND ANY EXPRESS OR IMPLIED WARRANTIES, INCLUDING, BUT NOT LIMITED TO, THE IMPLIED WARRANTIES OF MERCHANTABILITY AND FITNESS FOR A PARTICULAR PURPOSE ARE DISCLAIMED. IN NO EVENT SHALL THE COPYRIGHT HOLDER BE LIABLE FOR ANY DIRECT, INDIRECT, INCIDENTAL,

SPECIAL, EXEMPLARY, OR CONSEQUENTIAL DAMAGES (INCLUDING, BUT NOT LIMITED TO, PROCUREMENT OF SUBSTITUTE GOODS OR SERVICES; LOSS OF USE, DATA, OR PROFITS; OR BUSINESS INTERRUPTION) HOWEVER CAUSED AND ON ANY THEORY OF LIABILITY, WHETHER IN CONTRACT, STRICT LIABILITY, OR TORT (INCLUDING NEGLIGENCE OR OTHERWISE) ARISING IN ANY WAY OUT OF THE USE OF THIS SOFTWARE, EVEN IF ADVISED OF THE POSSIBILITY OF SUCH DAMAGE.

---- Part 8: Apple Inc. copyright notice (BSD) -----

Copyright (c) 2007 Apple Inc. All rights reserved.

Redistribution and use in source and binary forms, with or without modification, are permitted provided that the following conditions are met:

1. Redistributions of source code must retain the above copyright notice, this list of conditions and the following disclaimer.
2. Redistributions in binary form must reproduce the above copyright notice, this list of conditions and the following disclaimer in the documentation and/or other materials provided with the distribution.
3. Neither the name of Apple Inc. ("Apple") nor the names of its contributors may be used to endorse or promote products derived from this software without specific prior written permission.

THIS SOFTWARE IS PROVIDED BY APPLE AND ITS CONTRIBUTORS "AS IS" AND ANY EXPRESS OR IMPLIED WARRANTIES, INCLUDING, BUT NOT LIMITED TO, THE IMPLIED WARRANTIES OF MERCHANTABILITY AND FITNESS FOR A PARTICULAR PURPOSE ARE DISCLAIMED. IN NO EVENT SHALL APPLE OR ITS CONTRIBUTORS BE LIABLE FOR ANY DIRECT, INDIRECT, INCIDENTAL, SPECIAL, EXEMPLARY, OR CONSEQUENTIAL DAMAGES (INCLUDING, BUT NOT LIMITED TO, PROCUREMENT OF SUBSTITUTE GOODS OR SERVICES; LOSS OF USE, DATA, OR PROFITS; OR BUSINESS INTERRUPTION) HOWEVER CAUSED AND ON ANY THEORY OF LIABILITY, WHETHER IN CONTRACT, STRICT LIABILITY, OR TORT (INCLUDING NEGLIGENCE OR OTHERWISE) ARISING IN ANY WAY OUT OF THE USE OF THIS SOFTWARE, EVEN IF ADVISED OF THE POSSIBILITY OF SUCH DAMAGE.

---- Part 9: ScienceLogic, LLC copyright notice (BSD) -----

Copyright (c) 2009, ScienceLogic, LLC

All rights reserved.

Redistribution and use in source and binary forms, with or without modification, are permitted provided that the following conditions are met:

* Redistributions of source code must retain the above copyright notice, this list of conditions and the following disclaimer.
* Redistributions in binary form must reproduce the above copyright notice, this list of conditions and the following disclaimer in the documentation and/or other materials provided with the distribution.
* Neither the name of ScienceLogic, LLC nor the names of its contributors may be used to endorse or promote products derived from this software without specific prior written permission.

THIS SOFTWARE IS PROVIDED BY THE COPYRIGHT HOLDERS AND CONTRIBUTORS "AS IS" AND ANY EXPRESS OR IMPLIED WARRANTIES, INCLUDING, BUT NOT LIMITED TO, THE IMPLIED WARRANTIES OF MERCHANTABILITY AND FITNESS FOR A PARTICULAR PURPOSE ARE DISCLAIMED. IN NO EVENT SHALL THE COPYRIGHT HOLDERS OR CONTRIBUTORS BE LIABLE

FOR ANY DIRECT, INDIRECT, INCIDENTAL, SPECIAL, EXEMPLARY, OR CONSEQUENTIAL DAMAGES (INCLUDING, BUT NOT LIMITED TO, PROCUREMENT OF SUBSTITUTE GOODS OR SERVICES; LOSS OF USE, DATA, OR PROFITS; OR BUSINESS INTERRUPTION) HOWEVER CAUSED AND ON ANY THEORY OF LIABILITY, WHETHER IN CONTRACT, STRICT LIABILITY, OR TORT (INCLUDING NEGLIGENCE OR OTHERWISE) ARISING IN ANY WAY OUT OF THE USE OF THIS SOFTWARE, EVEN IF ADVISED OF THE POSSIBILITY OF SUCH DAMAGE.

LEADTOOLS

Copyright (C) 1991-2009 LEAD Technologies, Inc.

CMap Resources

Copyright 1990-2009 Adobe Systems Incorporated.
All rights reserved.

Copyright 1990-2010 Adobe Systems Incorporated.
All rights reserved.

Redistribution and use in source and binary forms, with or without modification, are permitted provided that the following conditions are met:

Redistributions of source code must retain the above copyright notice, this list of conditions and the following disclaimer.

Redistributions in binary form must reproduce the above copyright notice, this list of conditions and the following disclaimer in the documentation and/or other materials provided with the distribution.

Neither the name of Adobe Systems Incorporated nor the names of its contributors may be used to endorse or promote products derived from this software without specific prior written permission.

THIS SOFTWARE IS PROVIDED BY THE COPYRIGHT HOLDERS AND CONTRIBUTORS "AS IS" AND ANY EXPRESS OR IMPLIED WARRANTIES, INCLUDING, BUT NOT LIMITED TO, THE IMPLIED WARRANTIES OF MERCHANTABILITY AND FITNESS FOR A PARTICULAR PURPOSE ARE DISCLAIMED. IN NO EVENT SHALL THE COPYRIGHT HOLDER OR CONTRIBUTORS BE LIABLE FOR ANY DIRECT, INDIRECT, INCIDENTAL, SPECIAL, EXEMPLARY, OR CONSEQUENTIAL DAMAGES (INCLUDING, BUT NOT LIMITED TO, PROCUREMENT OF SUBSTITUTE GOODS OR SERVICES; LOSS OF USE, DATA, OR PROFITS; OR BUSINESS INTERRUPTION) HOWEVER CAUSED AND ON ANY THEORY OF LIABILITY, WHETHER IN CONTRACT, STRICT LIABILITY, OR TORT (INCLUDING NEGLIGENCE OR OTHERWISE) ARISING IN ANY WAY OUT OF THE USE OF THIS SOFTWARE, EVEN IF ADVISED OF THE POSSIBILITY OF SUCH DAMAGE.

MIT License

Copyright (c) 1998, 1999, 2000 Thai Open Source Software Center Ltd

Permission is hereby granted, free of charge, to any person obtaining a copy of this software and associated documentation files (the "Software"), to deal in the Software without restriction, including without limitation the rights to use, copy, modify, merge, publish, distribute, sublicense, and/or sell copies of the Software, and to permit persons to whom the Software is furnished to do so, subject to the following conditions:

The above copyright notice and this permission notice shall be included in all copies or substantial portions of the Software.

THE SOFTWARE IS PROVIDED "AS IS", WITHOUT WARRANTY OF ANY KIND, EXPRESS OR IMPLIED, INCLUDING BUT NOT LIMITED TO THE WARRANTIES OF MERCHANTABILITY, FITNESS FOR A PARTICULAR PURPOSE AND NONINFRINGEMENT. IN NO EVENT SHALL THE AUTHORS OR COPYRIGHT HOLDERS BE LIABLE FOR ANY CLAIM, DAMAGES OR OTHER LIABILITY, WHETHER IN AN ACTION OF CONTRACT, TORT OR OTHERWISE, ARISING FROM, OUT OF OR IN CONNECTION WITH THE SOFTWARE OR THE USE OR OTHER DEALINGS IN THE SOFTWARE.

Copyright 2000 Computing Research Labs, New Mexico State University

Copyright 2001-2015 Francesco Zappa Nardelli

Permission is hereby granted, free of charge, to any person obtaining a copy of this software and associated documentation files (the "Software"), to deal in the Software without restriction, including without limitation the rights to use, copy, modify, merge, publish, distribute, sublicense, and/or sell copies of the Software, and to permit persons to whom the Software is furnished to do so, subject to the following conditions:

The above copyright notice and this permission notice shall be included in all copies or substantial portions of the Software.

THE SOFTWARE IS PROVIDED "AS IS", WITHOUT WARRANTY OF ANY KIND, EXPRESS OR IMPLIED, INCLUDING BUT NOT LIMITED TO THE WARRANTIES OF MERCHANTABILITY, FITNESS FOR A PARTICULAR PURPOSE AND NONINFRINGEMENT. IN NO EVENT SHALL THE COMPUTING RESEARCH LAB OR NEW MEXICO STATE UNIVERSITY BE LIABLE FOR ANY CLAIM, DAMAGES OR OTHER LIABILITY, WHETHER IN AN ACTION OF CONTRACT, TORT OR OTHERWISE, ARISING FROM, OUT OF OR IN CONNECTION WITH THE SOFTWARE OR THE USE OR OTHER DEALINGS IN THE SOFTWARE.

Written by Joel Sherrill <joel@OARcorp.com>.

COPYRIGHT (c) 1989-2000.

On-Line Applications Research Corporation (OAR).

Permission to use, copy, modify, and distribute this software for any purpose without fee is hereby granted, provided that this entire notice is included in all copies of any software which is or includes a copy or modification of this software.

THIS SOFTWARE IS BEING PROVIDED "AS IS", WITHOUT ANY EXPRESS OR IMPLIED WARRANTY. IN PARTICULAR, THE AUTHOR MAKES NO REPRESENTATION OR WARRANTY OF ANY KIND

CONCERNING THE MERCHANTABILITY OF THIS SOFTWARE OR ITS FITNESS FOR ANY PARTICULAR PURPOSE.

(1) Red Hat Incorporated

Copyright (c) 1994-2009 Red Hat, Inc. All rights reserved.

This copyrighted material is made available to anyone wishing to use, modify, copy, or redistribute it subject to the terms and conditions of the BSD License. This program is distributed in the hope that it will be useful, but WITHOUT ANY WARRANTY expressed or implied, including the implied warranties of MERCHANTABILITY or FITNESS FOR A PARTICULAR PURPOSE. A copy of this license is available at http://www.opensource.org/licenses. Any Red Hat trademarks that are incorporated in the source code or documentation are not subject to the BSD License and may only be used or replicated with the express permission of Red Hat, Inc.

(2) University of California, Berkeley

Copyright (c) 1981-2000 The Regents of the University of California.

All rights reserved.

Redistribution and use in source and binary forms, with or without modification, are permitted provided that the following conditions are met:

* Redistributions of source code must retain the above copyright notice, this list of conditions and the following disclaimer.
* Redistributions in binary form must reproduce the above copyright notice, this list of conditions and the following disclaimer in the documentation and/or other materials provided with the distribution.
* Neither the name of the University nor the names of its contributors may be used to endorse or promote products derived from this software without specific prior written permission.

THIS SOFTWARE IS PROVIDED BY THE COPYRIGHT HOLDERS AND CONTRIBUTORS "AS IS" AND ANY EXPRESS OR IMPLIED WARRANTIES, INCLUDING, BUT NOT LIMITED TO, THE IMPLIED WARRANTIES OF MERCHANTABILITY AND FITNESS FOR A PARTICULAR PURPOSE ARE DISCLAIMED. IN NO EVENT SHALL THE COPYRIGHT OWNER OR CONTRIBUTORS BE LIABLE FOR ANY DIRECT, INDIRECT, INCIDENTAL, SPECIAL, EXEMPLARY, OR CONSEQUENTIAL DAMAGES (INCLUDING, BUT NOT LIMITED TO, PROCUREMENT OF SUBSTITUTE GOODS OR SERVICES; LOSS OF USE, DATA, OR PROFITS; OR BUSINESS INTERRUPTION) HOWEVER CAUSED AND ON ANY THEORY OF LIABILITY, WHETHER IN CONTRACT, STRICT LIABILITY, OR TORT (INCLUDING NEGLIGENCE OR OTHERWISE) ARISING IN ANY WAY OUT OF THE USE OF THIS SOFTWARE, EVEN IF ADVISED OF THE POSSIBILITY OF SUCH DAMAGE.

The FreeType Project LICENSE

2006-Jan-27

Copyright 1996-2002, 2006 by

David Turner, Robert Wilhelm, and Werner Lemberg

Introduction

==========

The FreeType Project is distributed in several archive packages; some of them may contain, in addition to the FreeType font engine, various tools and contributions which rely on, or relate to, the FreeType Project.

This license applies to all files found in such packages, and which do not fall under their own explicit license. The license affects thus the FreeType font engine, the test programs, documentation and makefiles, at the very least.

This license was inspired by the BSD, Artistic, and IJG (Independent JPEG Group) licenses, which all encourage inclusion and use of free software in commercial and freeware products alike. As a consequence, its main points are that:

o We don't promise that this software works. However, we will be interested in any kind of bug reports. (`as is' distribution)

o You can use this software for whatever you want, in parts or full form, without having to pay us. (`royalty-free' usage)

o You may not pretend that you wrote this software. If you use it, or only parts of it, in a program, you must acknowledge somewhere in your documentation that you have used the FreeType code. (`credits')

We specifically permit and encourage the inclusion of this software, with or without modifications, in commercial products.

We disclaim all warranties covering The FreeType Project and assume no liability related to The FreeType Project.

Finally, many people asked us for a preferred form for a credit/disclaimer to use in compliance with this license. We thus encourage you to use the following text:

"""

Portions of this software are copyright © <year> The FreeType

Project (www.freetype.org). All rights reserved.

"""

Please replace <year> with the value from the FreeType version you actually use.

Legal Terms

==========

0. Definitions

Throughout this license, the terms `package', `FreeType Project', and `FreeType archive' refer to the set of files originally distributed by the authors (David Turner, Robert Wilhelm, and Werner Lemberg) as the `FreeType Project', be they named as alpha, beta or final release.

`You' refers to the licensee, or person using the project, where `using' is a generic term including compiling the project's source code as well as linking it to form a `program' or `executable'.

This program is referred to as `a program using the FreeType engine'.

This license applies to all files distributed in the original FreeType Project, including all source code, binaries and documentation, unless otherwise stated in the file in its original, unmodified form as distributed in the original archive.

If you are unsure whether or not a particular file is covered by this license, you must contact us to verify this.

The FreeType Project is copyright (C) 1996-2000 by David Turner, Robert Wilhelm, and Werner Lemberg. All rights reserved except as specified below.

1. No Warranty

THE FREETYPE PROJECT IS PROVIDED `AS IS' WITHOUT WARRANTY OF ANY KIND, EITHER EXPRESS OR IMPLIED, INCLUDING, BUT NOT LIMITED TO, WARRANTIES OF MERCHANTABILITY AND FITNESS FOR A PARTICULAR PURPOSE. IN NO EVENT WILL ANY OF THE AUTHORS OR COPYRIGHT HOLDERS BE LIABLE FOR ANY DAMAGES CAUSED BY THE USE OR THE INABILITY TO USE, OF THE FREETYPE PROJECT.

2. Redistribution

This license grants a worldwide, royalty-free, perpetual and irrevocable right and license to use, execute, perform, compile, display, copy, create derivative works of, distribute and sublicense the FreeType Project (in both source and object code forms) and derivative works thereof for any purpose; and to authorize others to exercise some or all of the rights granted herein, subject to the following conditions:

o Redistribution of source code must retain this license file (`FTL.TXT') unaltered; any additions, deletions or changes to the original files must be clearly indicated in accompanying documentation. The copyright notices of the unaltered, original files must be preserved in all copies of source files.

o Redistribution in binary form must provide a disclaimer that states that the software is based in part of the work of the FreeType Team, in the distribution documentation. We also encourage you to put an URL to the FreeType web page in your documentation, though this isn't mandatory.

These conditions apply to any software derived from or based on the FreeType Project, not just the unmodified files. If you use our work, you must acknowledge us. However, no fee need be paid to us.

3. Advertising

Neither the FreeType authors and contributors nor you shall use the name of the other for commercial, advertising, or promotional purposes without specific prior written permission.

We suggest, but do not require, that you use one or more of the following phrases to refer to this software in your documentation or advertising materials: `FreeType Project', `FreeType Engine', `FreeType library', or `FreeType Distribution'.

As you have not signed this license, you are not required to accept it. However, as the FreeType Project is copyrighted material, only this license, or another one contracted with the authors, grants you the right to use, distribute, and modify it.

Therefore, by using, distributing, or modifying the FreeType Project, you indicate that you understand and accept all the terms of this license.

4. Contacts

There are two mailing lists related to FreeType:

o freetype@nongnu.org

Discusses general use and applications of FreeType, as well as future and wanted additions to the library and distribution.

If you are looking for support, start in this list if you haven't found anything to help you in the documentation.

o freetype-devel@nongnu.org

Discusses bugs, as well as engine internals, design issues, specific licenses, porting, etc.

Our home page can be found at

http://www.freetype.org

--- end of FTL.TXT ---

The TWAIN Toolkit is distributed as is. The developer and distributors of the TWAIN Toolkit expressly disclaim all implied, express or statutory warranties including, without limitation, the implied warranties of merchantability, noninfringement of third party rights and fitness for a particular purpose. Neither the developers nor the distributors will be liable for damages, whether direct, indirect, special, incidental, or consequential, as a result of the reproduction, modification, distribution or other use of the TWAIN Toolkit.

JSON for Modern C++

Copyright (c) 2013-2017 Niels Lohmann

Permission is hereby granted, free of charge, to any person obtaining a copy of this software and associated documentation files (the "Software"), to deal in the Software without restriction, including without limitation the rights to use, copy, modify, merge, publish, distribute, sublicense, and/or sell copies of the Software, and to permit persons to whom the Software is furnished to do so, subject to the following conditions:

The above copyright notice and this permission notice shall be included in all copies or substantial portions of the Software.

THE SOFTWARE IS PROVIDED "AS IS", WITHOUT WARRANTY OF ANY KIND, EXPRESS OR IMPLIED, INCLUDING BUT NOT LIMITED TO THE WARRANTIES OF MERCHANTABILITY, FITNESS FOR A PARTICULAR PURPOSE AND NONINFRINGEMENT. IN NO EVENT SHALL THE AUTHORS OR COPYRIGHT HOLDERS BE LIABLE FOR ANY CLAIM, DAMAGES OR OTHER LIABILITY, WHETHER IN AN ACTION OF CONTRACT, TORT OR OTHERWISE, ARISING FROM, OUT OF OR IN CONNECTION WITH THE SOFTWARE OR THE USE OR OTHER DEALINGS IN THE SOFTWARE.

The following applies only to products supporting Wi-Fi.

(c) 2009-2013 by Jeff Mott. All rights reserved.

Redistribution and use in source and binary forms, with or without modification, are permitted provided that the following conditions are met:

* Redistributions of source code must retain the above copyright notice, this list of conditions, and the following disclaimer.
* Redistributions in binary form must reproduce the above copyright notice, this list of conditions, and the following disclaimer in the documentation or other materials provided with the distribution.
* Neither the name CryptoJS nor the names of its contributors may be used to endorse or promote products derived from this software without specific prior written permission.

THIS SOFTWARE IS PROVIDED BY THE COPYRIGHT HOLDERS AND CONTRIBUTORS "AS IS," AND ANY EXPRESS OR IMPLIED WARRANTIES, INCLUDING, BUT NOT LIMITED TO, THE IMPLIED WARRANTIES OF MERCHANTABILITY AND FITNESS FOR A PARTICULAR PURPOSE, ARE DISCLAIMED. IN NO EVENT SHALL THE COPYRIGHT HOLDER OR CONTRIBUTORS BE LIABLE FOR ANY DIRECT, INDIRECT, INCIDENTAL, SPECIAL, EXEMPLARY, OR CONSEQUENTIAL DAMAGES (INCLUDING, BUT NOT LIMITED TO, PROCUREMENT OF SUBSTITUTE GOODS OR SERVICES; LOSS OF USE, DATA, OR PROFITS; OR BUSINESS INTERRUPTION) HOWEVER CAUSED AND ON ANY THEORY OF LIABILITY, WHETHER IN CONTRACT, STRICT LIABILITY, OR TORT (INCLUDING NEGLIGENCE OR OTHERWISE) ARISING IN ANY WAY OUT OF THE USE OF THIS SOFTWARE, EVEN IF ADVISED OF THE POSSIBILITY OF SUCH DAMAGE.

Basic Operation

- Printing Photos from a Computer
- Printing Photos from a Smartphone/Tablet
- Copying
- Printing Photos from Memory Card
- Printing a Disc Label from a Computer
- Copying a Disc Label

Printing Photos from a Computer

This section describes how to print photos with Easy-PhotoPrint Editor.

1. Open rear tray cover (A). Pull straight up and fold back paper support (B).

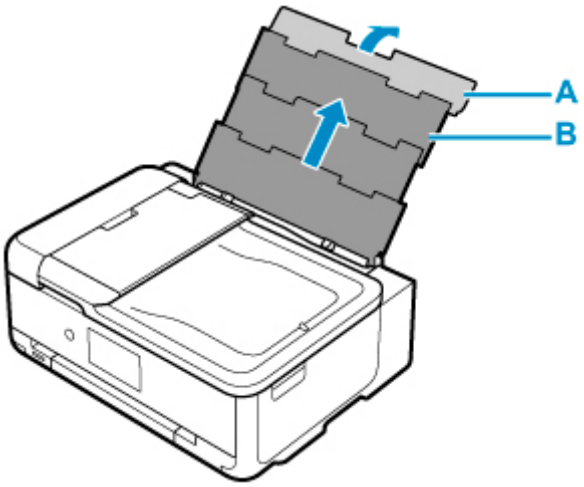

2. Open the feed slot cover (C).

3. Slide right paper guide (D) to open both paper guides.

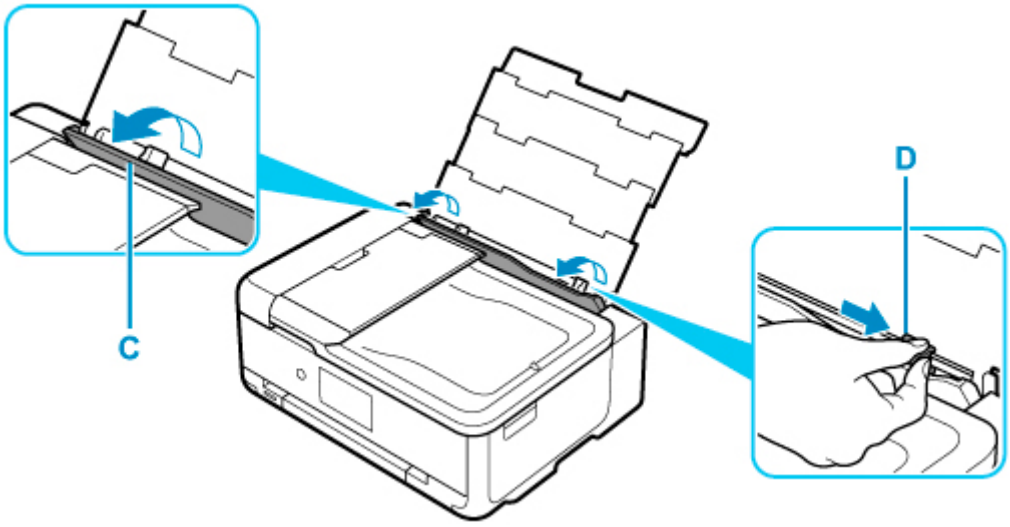

4. Load photo paper in portrait orientation WITH PRINT SIDE FACING UP.

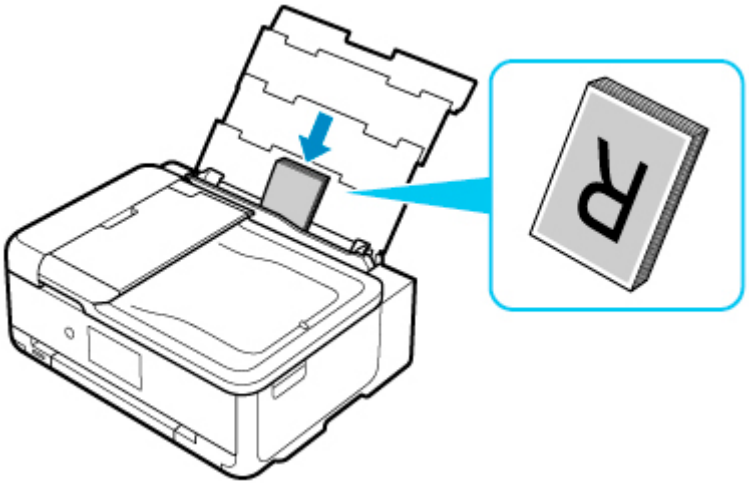

5. Slide right paper guide (D) to align with both sides of paper stack.

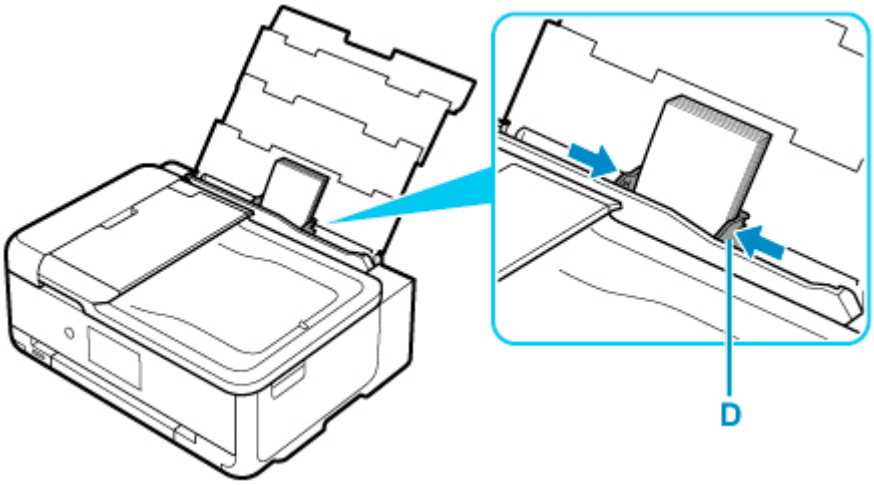

6. Close feed slot cover (C) gently.

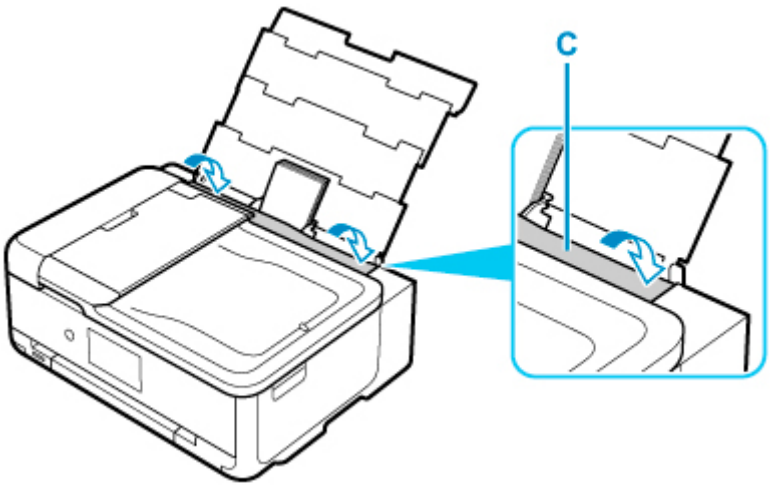

After closing the feed slot cover, the paper setting confirmation screen for the rear tray appears on the touch screen.

7. If page size and media type on touch screen match size and type of paper loaded in rear tray, select **Yes**.

   If not, select **Change** to change the settings in accordance with the size and type of the loaded paper.

8. Open operation panel (E), and then pull out paper output tray (F) and paper output support (G).

   Be sure to open the operation panel before printing. If the operation panel is close, the printer does not start printing.

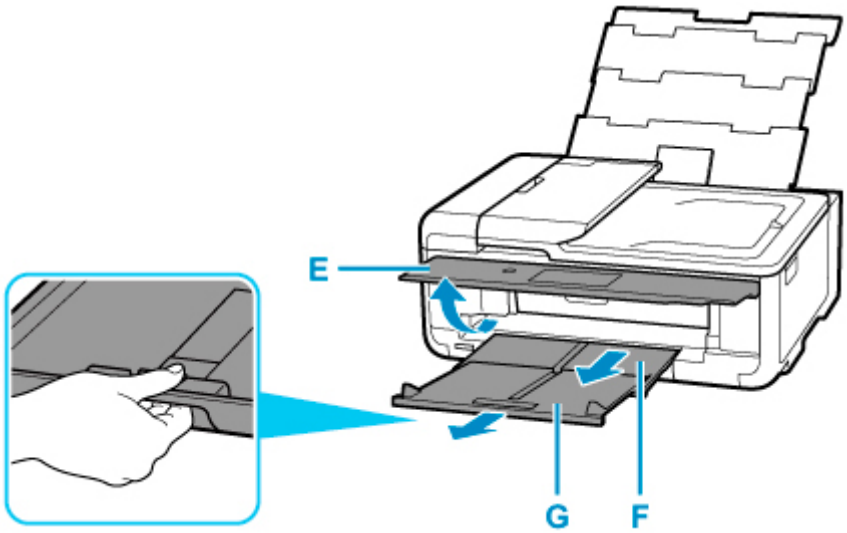

9. Start Easy-PhotoPrint Editor.

   For Windows:

   The procedure below is for a computer running the Windows 10 operating system.

   From the **Start** menu, select (**All apps** >) **Canon Utilities** > **Easy-PhotoPrint Editor**.

   For macOS:

   From the **Go** menu in **Finder**, select **Application** and double-click the **Canon Utilities** folder, the **Easy-PhotoPrint Editor** folder, and then the **Easy-PhotoPrint Editor** icon.

10. Click **Photos** icon (H).

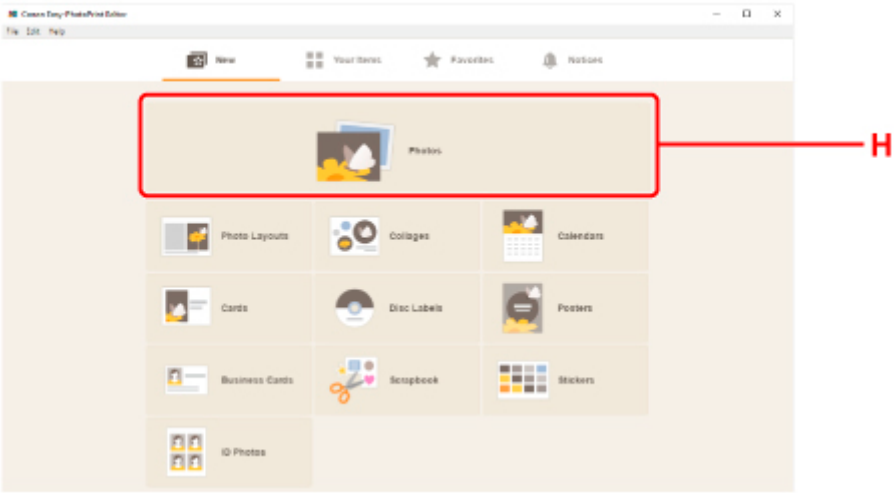

11. Click **Browse** (I) in **From computer:** and select folder with photos you want to print.

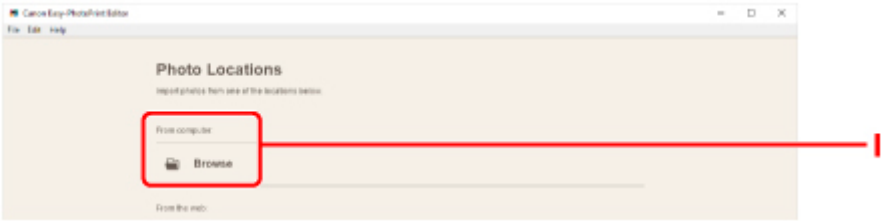

12. Click photos (J) you want to print and select **Open** (K).

For Windows:

To select two or more photos at a time, click photos while pressing the Ctrl key.

For macOS:

To select two or more photos at a time, click photos while pressing the command key.

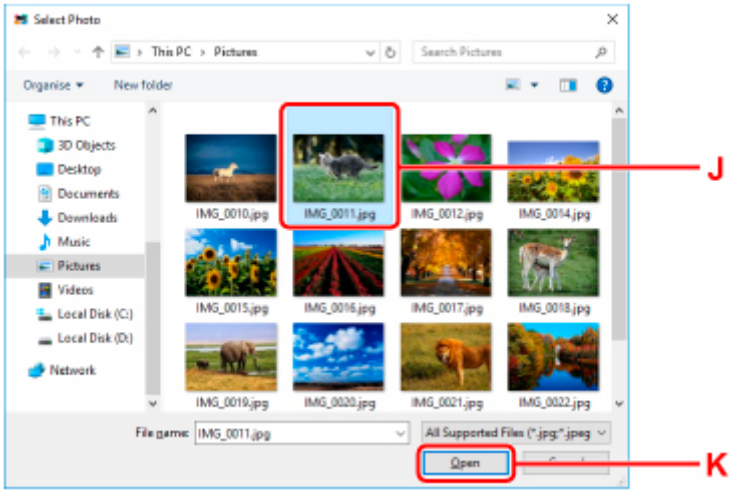

13. Specify number of copies and other options under **Print Settings** (L).

For Windows:

Specify the number of copies, your model name, the paper size, and other options.

For macOS:

Specify the number of copies, the paper size, and other options.

Note

- Selecting **Same No. of each photo** enables you to specify the number of copies for all photos with a single setting.
- Selecting **Same No. of each photo** disables the number-of-copies setting specified for each photo. When unchecked, the previous settings for each copy are re-enabled. ▼ for specifying the number of copies is also re-enabled.

14. Start printing.

For Windows:

Click **Print** (M).

For macOS:

Click **Next**. When the Print dialog appears, specify your model name, paper, and other options, and then click **Print**.

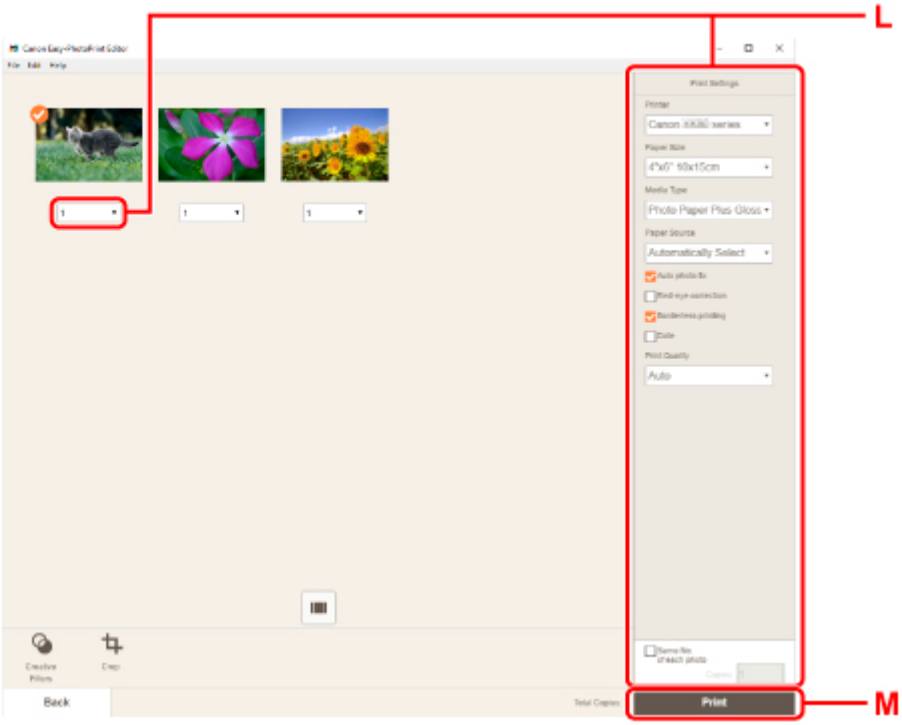

Note

- Easy-PhotoPrint Editor lets you easily create and print original collages, cards, or calendars using your favorite photos.

  Easy-PhotoPrint Editor Guide

Printing Photos from a Smartphone/Tablet

This section describes how to print photos with Canon PRINT Inkjet/SELPHY.

For details on how to download Canon PRINT Inkjet/SELPHY, see below.

- Print Easily from a Smartphone or Tablet with Canon PRINT Inkjet/SELPHY

1. Open rear tray cover (A). Pull straight up and fold back paper support (B).

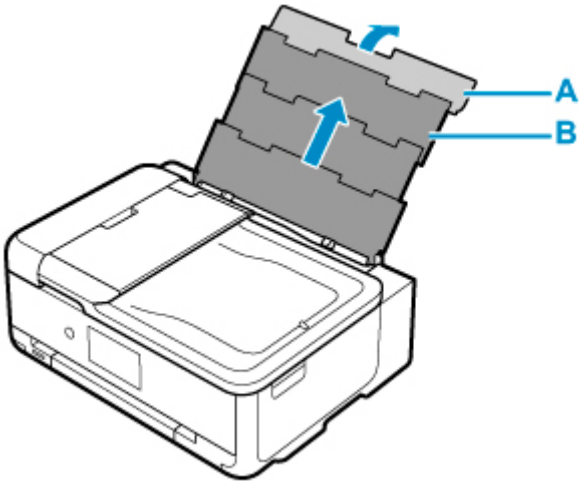

2. Open the feed slot cover (C).

3. Slide right paper guide (D) to open both paper guides.

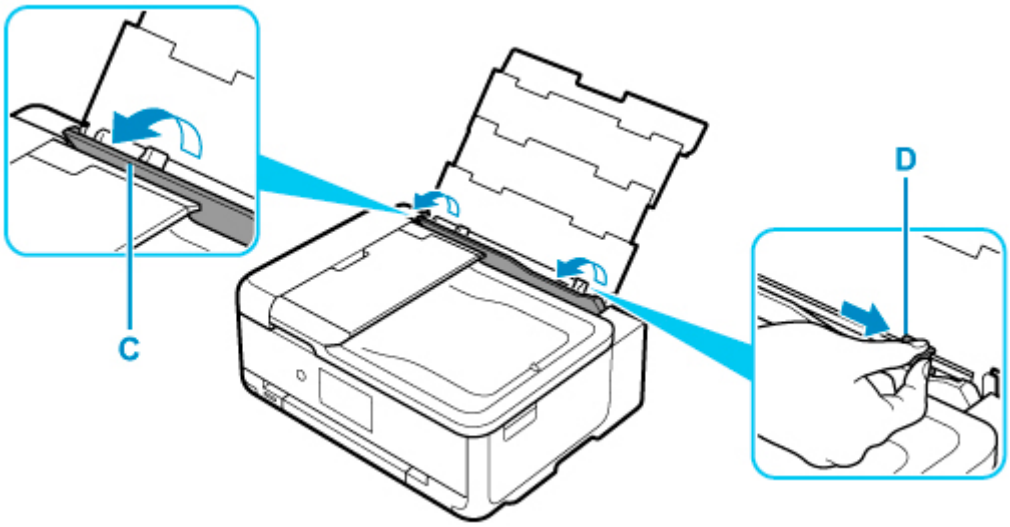

4. Load photo paper in portrait orientation WITH PRINT SIDE FACING UP.

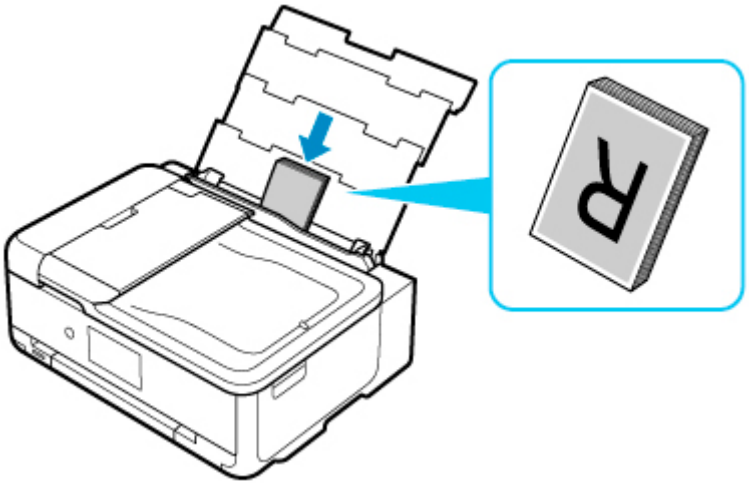

5. Slide right paper guide (D) to align with both sides of paper stack.

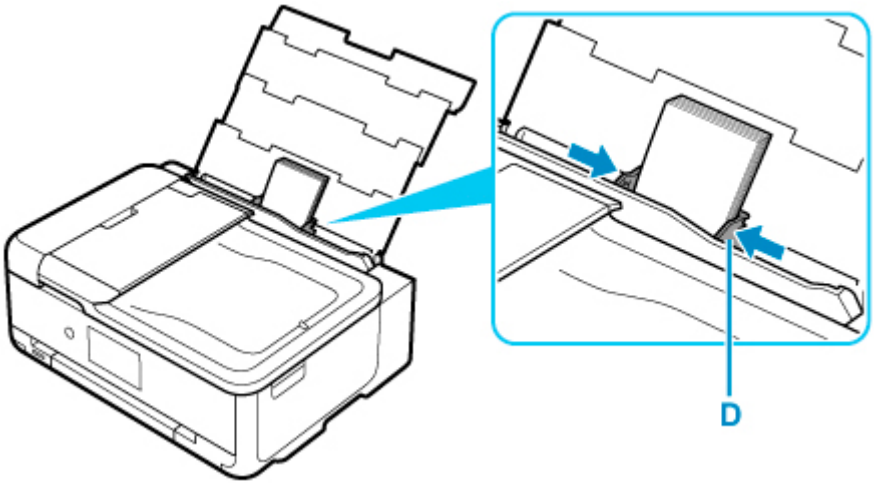

6. Close feed slot cover (C) gently.

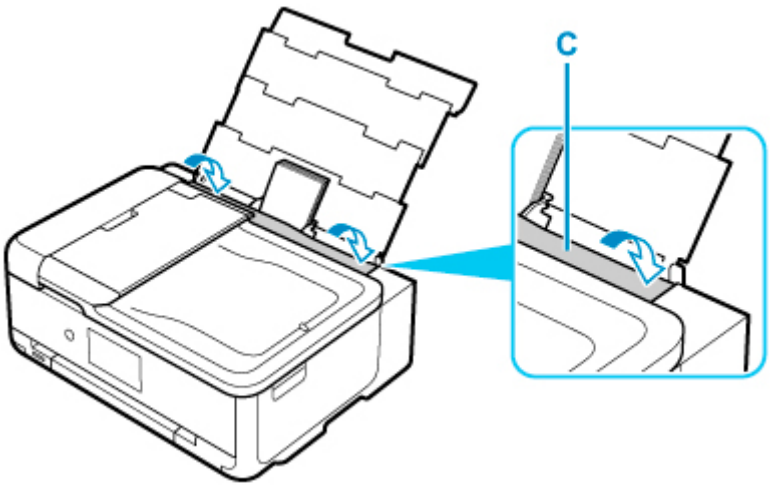

After closing the feed slot cover, the paper setting confirmation screen for the rear tray appears on the touch screen.

7. If page size and media type on touch screen match size and type of paper loaded in rear tray, select **Yes**.

   If not, select **Change** to change the settings in accordance with the size and type of the loaded paper.

8. Open operation panel (E), and then pull out paper output tray (F) and paper output support (G).

   Be sure to open the operation panel before printing. If the operation panel is close, the printer does not start printing.

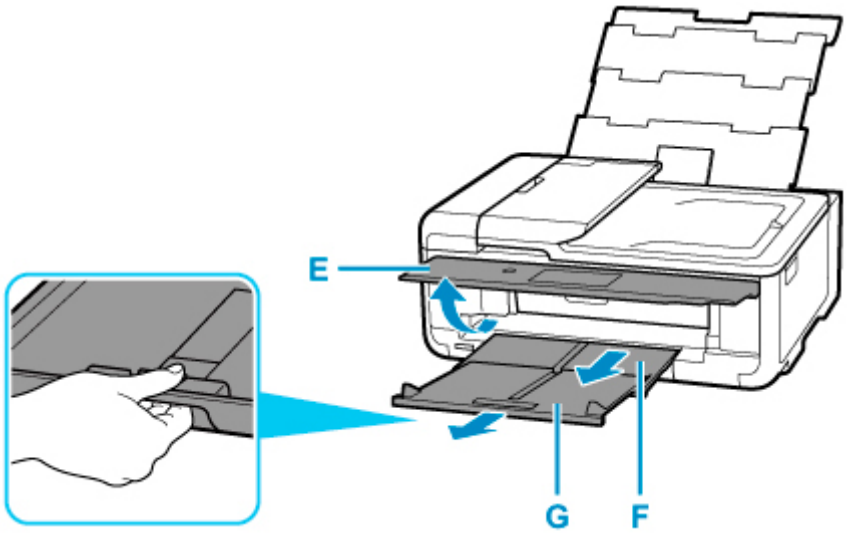

9. Start (Canon PRINT Inkjet/SELPHY) from your smartphone/tablet.

10. Select **Photo Print** on Canon PRINT Inkjet/SELPHY.

    The list of photos saved on your smartphone/tablet is displayed.

11. Select a photo.

    You can also select multiple photos at once.

12. Specify the number of copies, paper size, etc.

13. Select **Print**.

Copying

This section describes how to load originals and copy them to plain paper loaded in the cassette.

1. Pull out the cassette (A) from the printer.

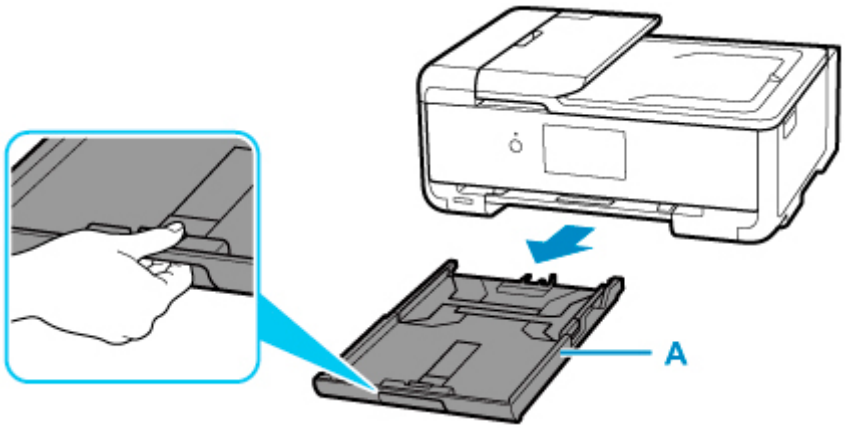

2. Slide paper guides (B) in front and (C) on right to open guides.

3. Load plain paper in portrait orientation WITH PRINT SIDE FACING DOWN.

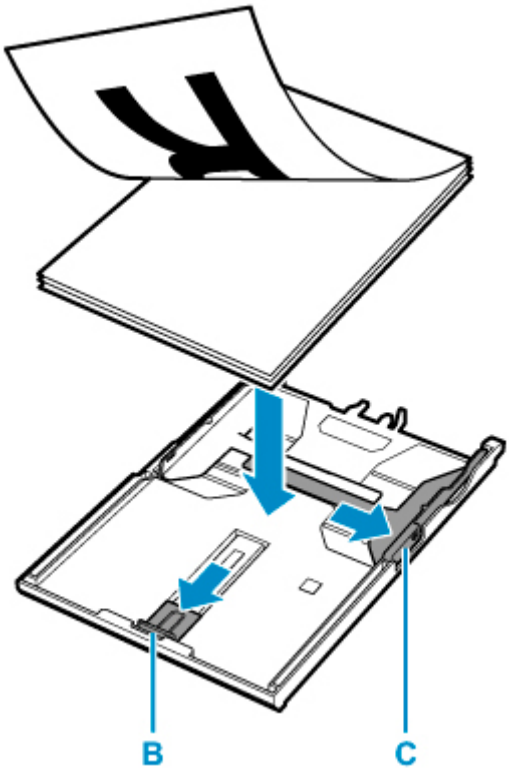

4. Align paper guides (B) in front and (C) on right with paper length and width.

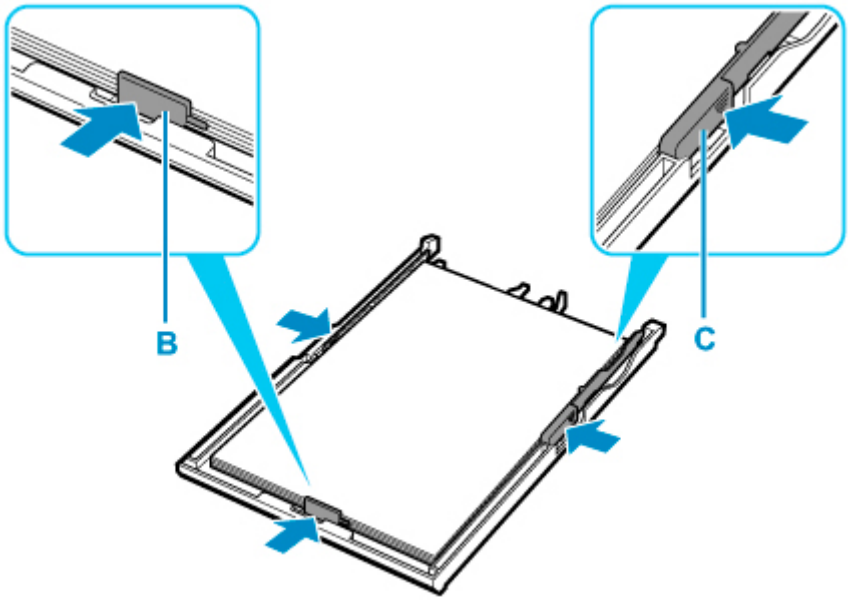

5. Insert cassette into printer.

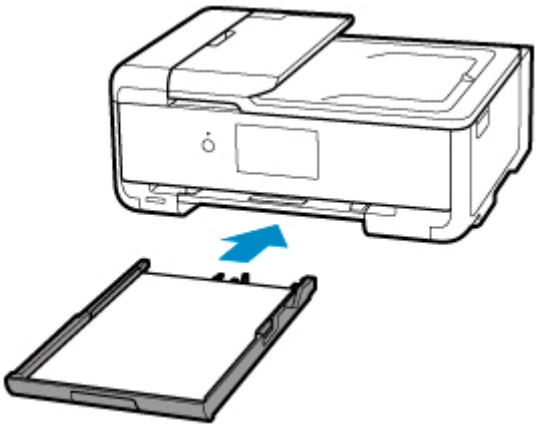

After inserting the cassette into the printer, the paper setting confirmation screen for the cassette appears on the touch screen.

6. If page size on touch screen matches size of paper loaded in cassette, select **Yes**.

If not, select **Change** to change the setting in accordance with the size of the loaded paper.

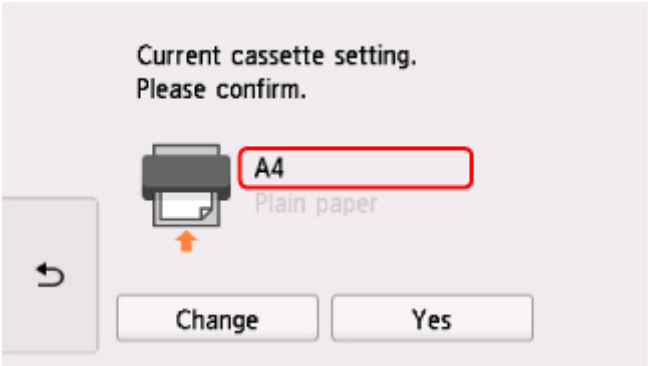

7. Open operation panel (D), and then pull out paper output tray (E) and paper output support (F).

   Be sure to open the operation panel before printing. If the operation panel is close, the printer does not start printing.

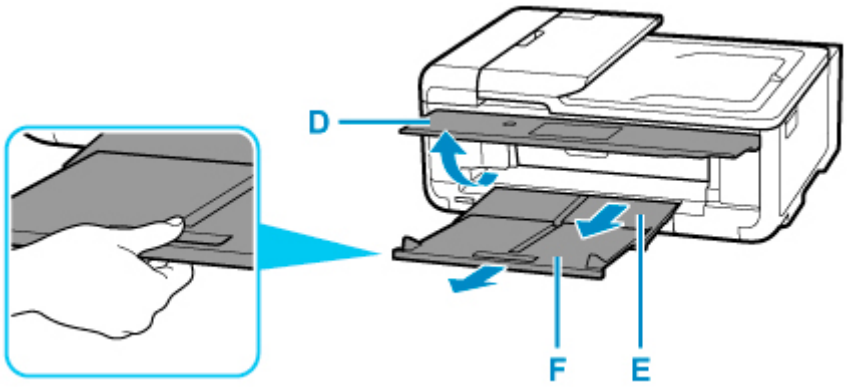

8. Select **Copy** (G) on HOME screen.

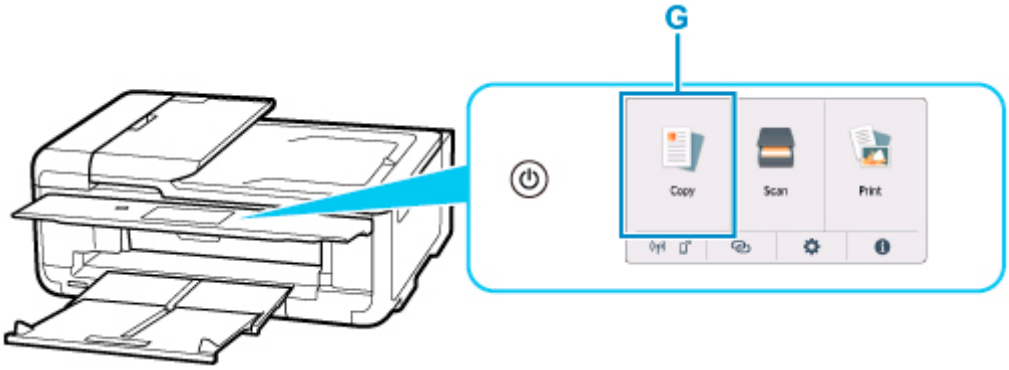

9. Select **Standard copy**.

10. Open document cover (H).

11. Load original WITH SIDE TO COPY FACING DOWN and align it with alignment mark (I).

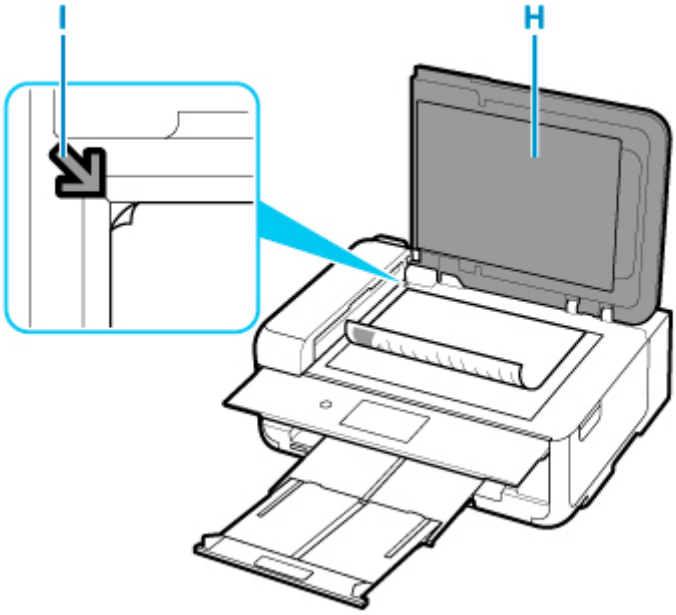

Note

- To copy two or more documents continuously, load them in the ADF (Auto Document Feeder).

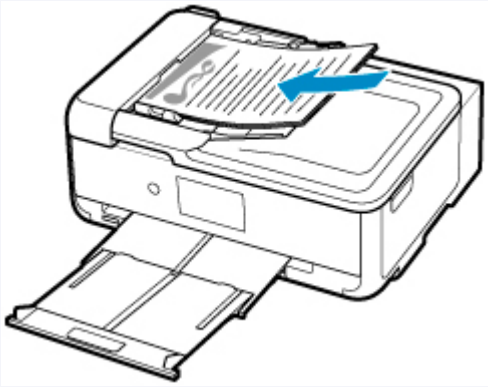

Loading Documents in the ADF (Auto Document Feeder)

12. Close the document cover.

13. Check paper settings and tap **Black** (J) or **Color** (K).

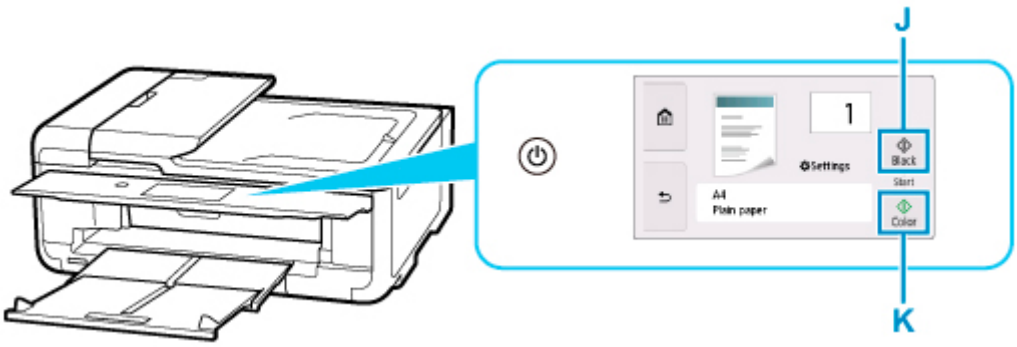

Important

- Do not open the document cover until copying is complete.

Note

- Your printer is equipped with many other convenient copy features.

  Copying

Printing Photos from Memory Card

This section describes how to print photos on a memory card.

1. Open rear tray cover (A). Pull straight up and fold back paper support (B).

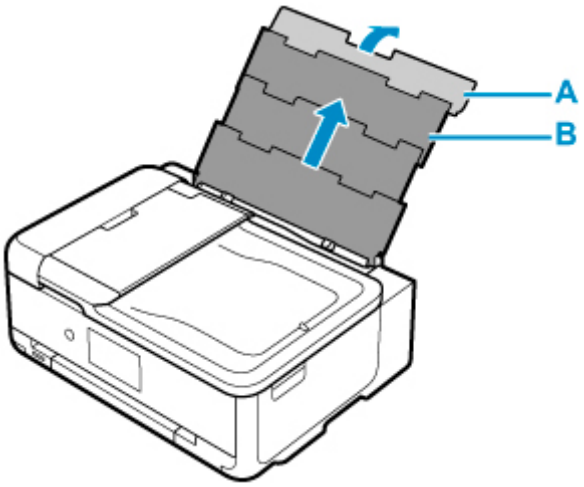

2. Open the feed slot cover (C).

3. Slide right paper guide (D) to open both paper guides.

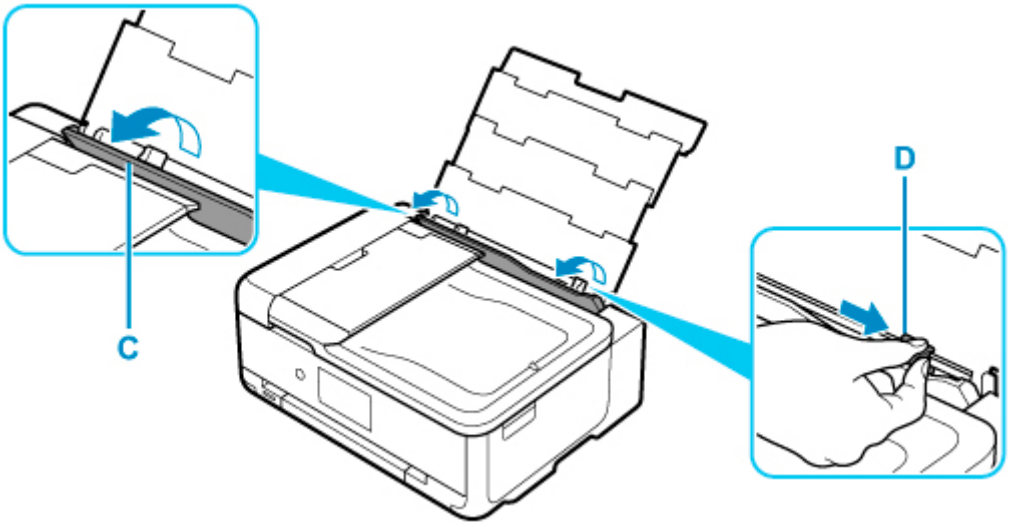

4. Load photo paper in portrait orientation WITH PRINT SIDE FACING UP.

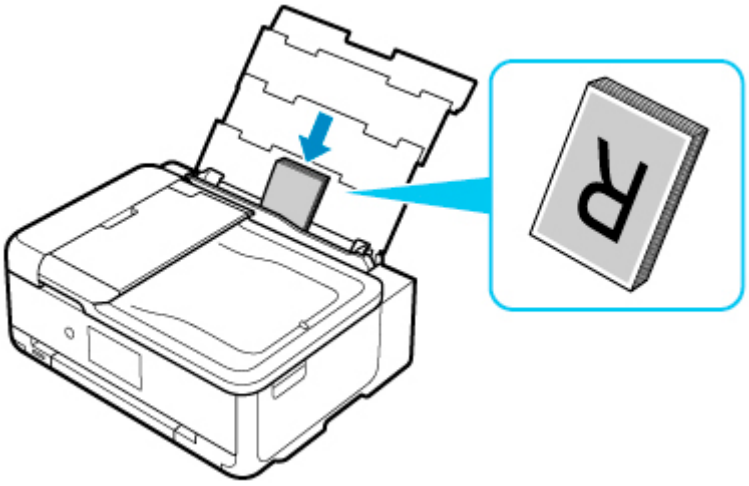

5. Slide right paper guide (D) to align with both sides of paper stack.

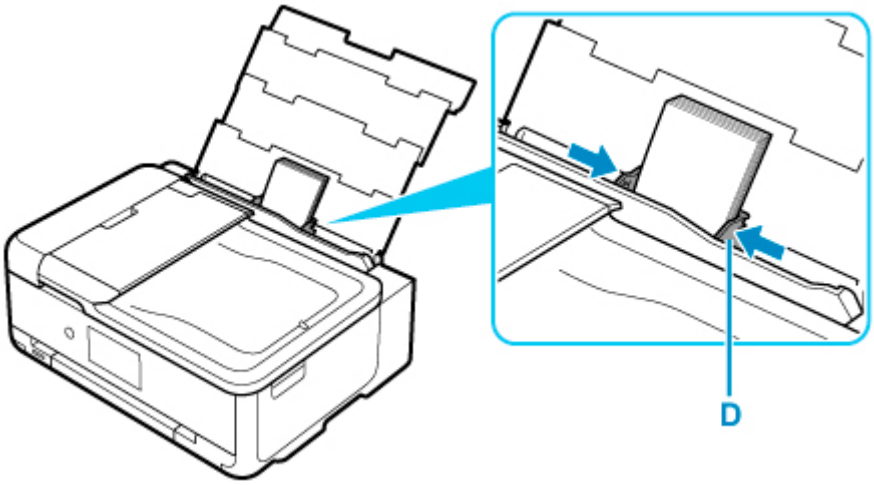

6. Close feed slot cover (C) gently.

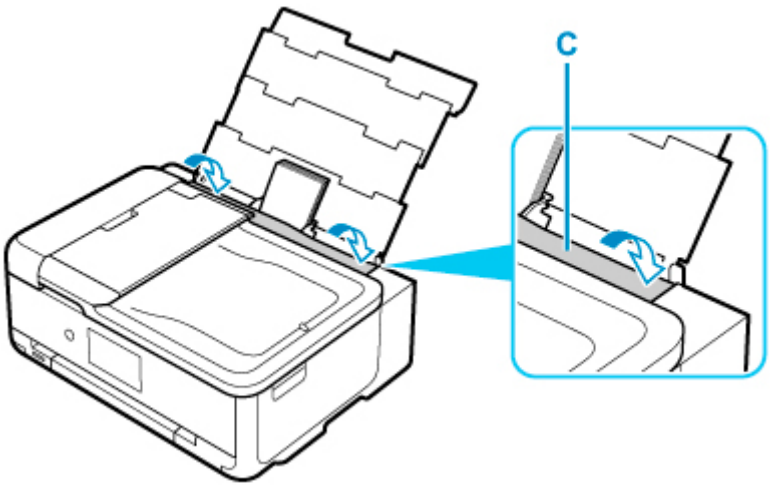

After closing the feed slot cover, the paper setting confirmation screen for the rear tray appears on the touch screen.

7. If page size and media type on touch screen match size and type of paper loaded in rear tray, select **Yes**.

   If not, select **Change** to change the settings in accordance with the size and type of the loaded paper.

8. Open operation panel (E), and then pull out paper output tray (F) and paper output support (G).

   Be sure to open the operation panel before printing. If the operation panel is close, the printer does not start printing.

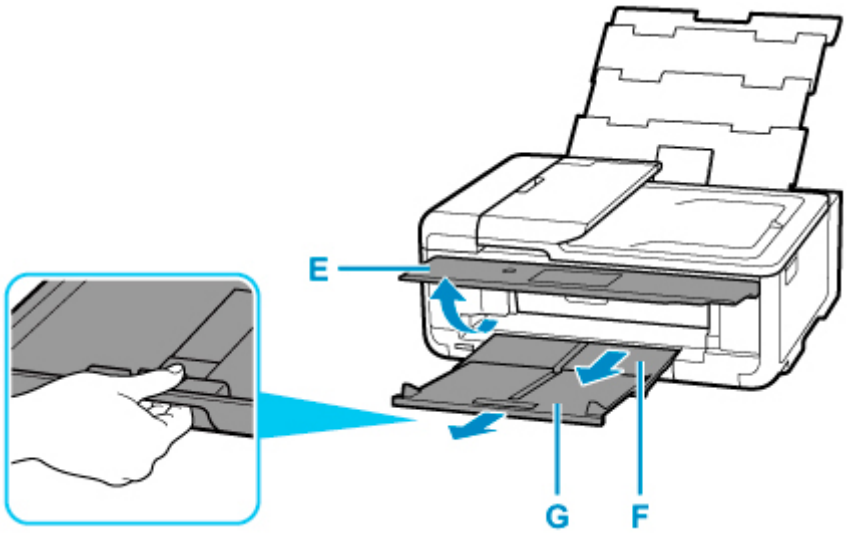

9. Insert the memory card.

   * The figure below shows the SD/SDHC/SDXC memory card as an example.

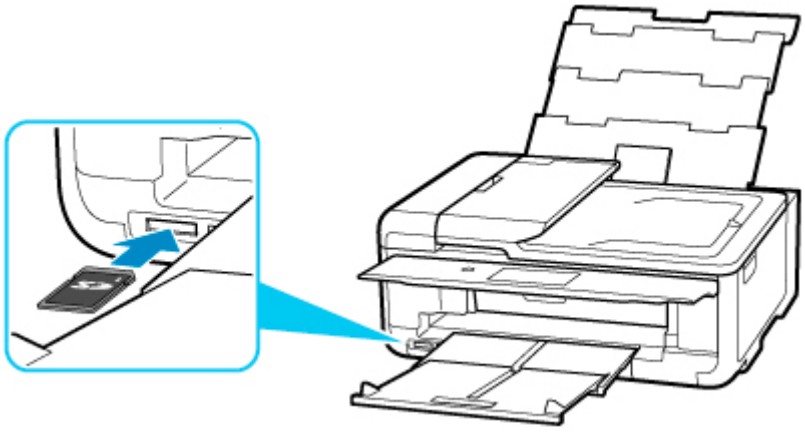

Note

- For details on inserting memory cards other than SD/SDHC/SDXC, see below.

  Inserting the Memory Card

10. Flick right and left through the photos (H) and select one.

11. Check paper settings and tap **Color** (I).

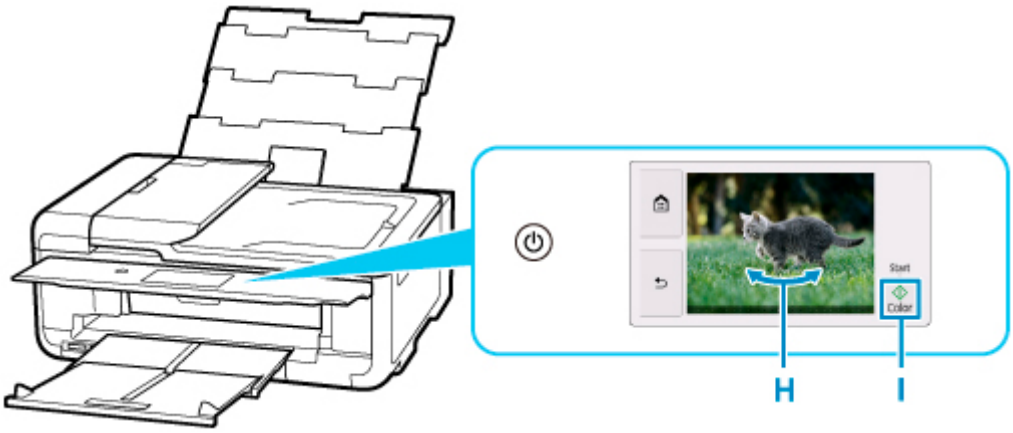

Important

- Do not remove the memory card during printing. Data on the memory card may be damaged.

Note

- Your printer is equipped with many other convenient photo print features.

  Printing Photo Data

Printing a Disc Label from a Computer

This section describes how to print photos on a printable disc with Easy-PhotoPrint Editor.

Important

- Do not mount the multi-purpose tray until the message prompting you to load the printable disc appears. Doing so can damage the printer.

1. Start Easy-PhotoPrint Editor.

   For Windows:

   The procedure below is for a computer running the Windows 10 operating system.

   From the **Start** menu, select (**All apps** >) **Canon Utilities** > **Easy-PhotoPrint Editor**.

   For macOS:

   From the **Go** menu in **Finder**, select **Application** and double-click the **Canon Utilities** folder, the **Easy-PhotoPrint Editor** folder, and then the **Easy-PhotoPrint Editor** icon.

2. Click **Disc Labels** icon (A).

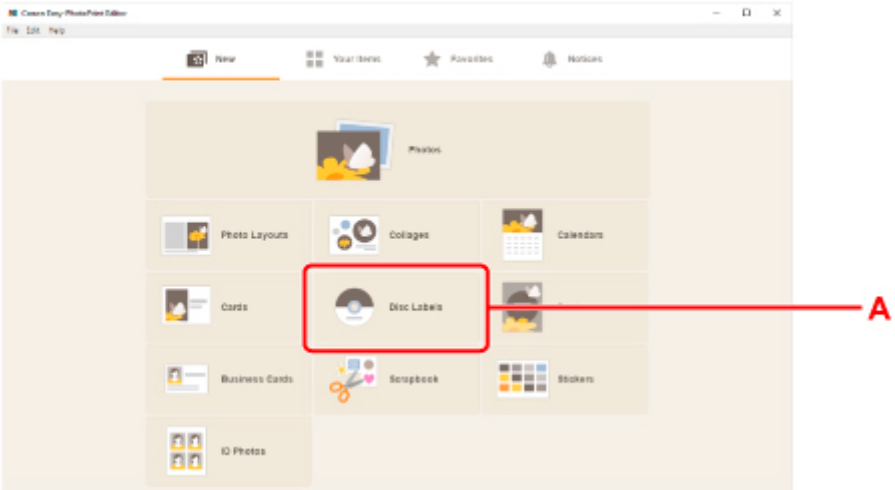

3. Select template (B).

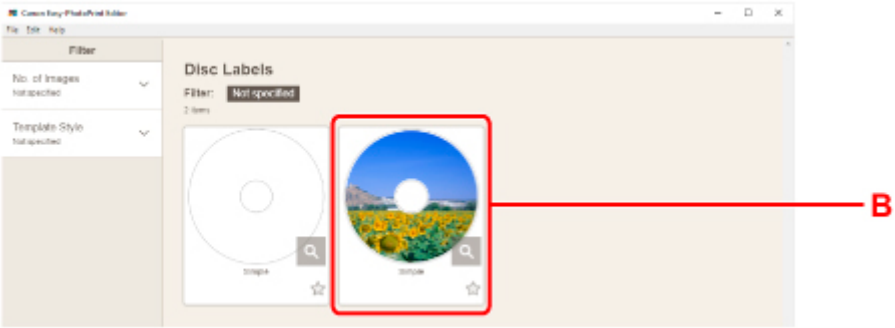

4. Select type of printable disc (C) and select **Next** (D).

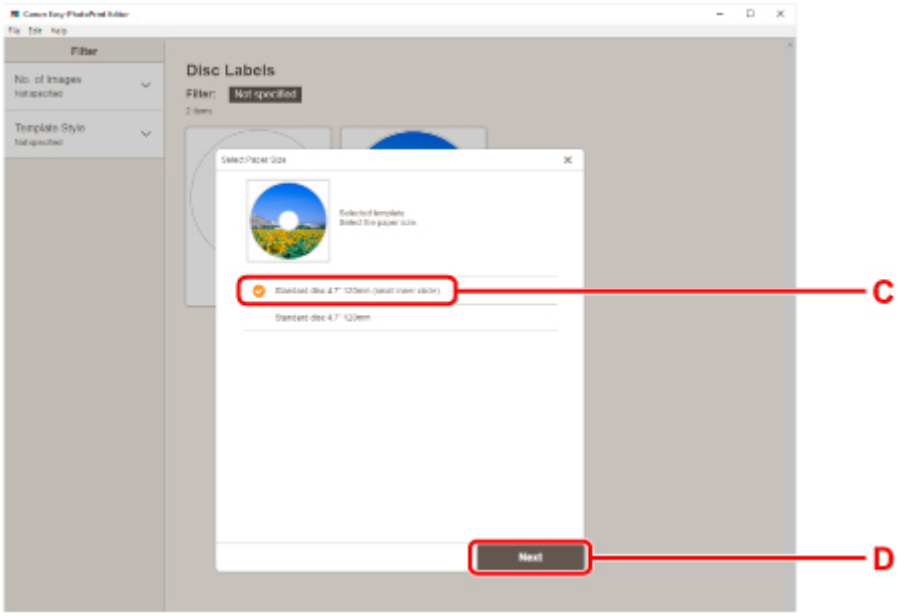

5. Click **Browse** (E) in **From computer**: and select folder with photos you want to print.

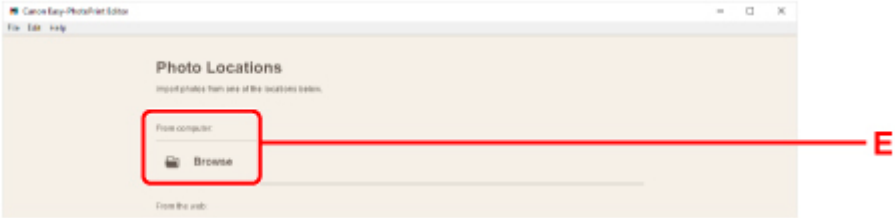

6. Click photos (F) you want to print and select **Open** (G).

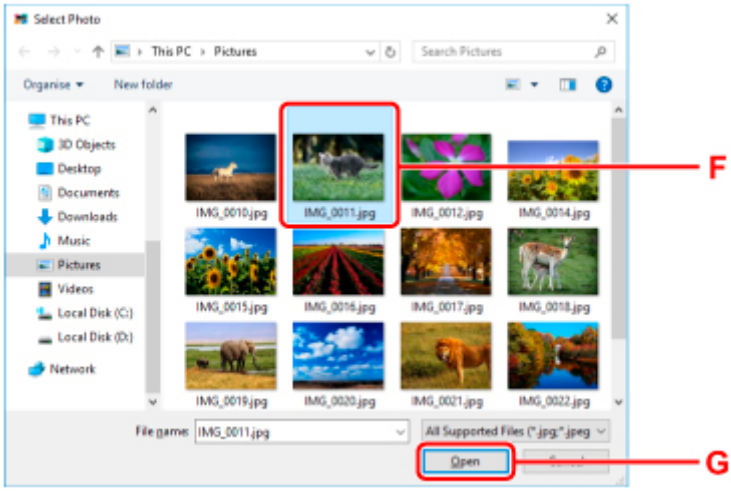

7. Edit disc label and select **Next** (H).

You can change the background or add texts.

Easy-PhotoPrint Editor Guide

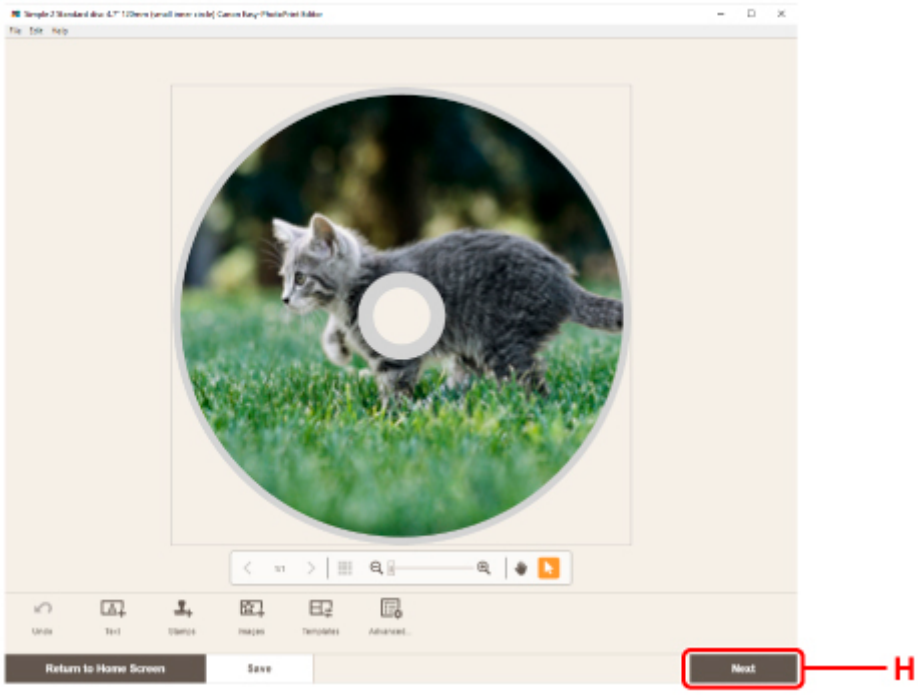

8. Open operation panel (I) until horizontal.

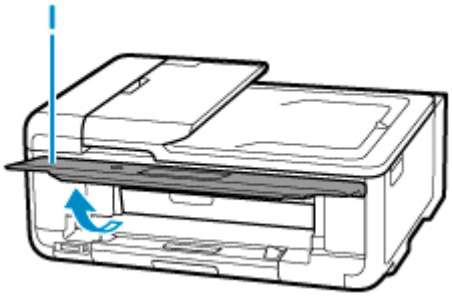

9. Specify number of copies and other options under **Print Settings** (J).

   For Windows:

   Specify the number of copies, your printer name, and other options.

   For macOS:

   Specify the number of copies and other options.

10. Start printing.

   For Windows:

   Click **Print** (K).

   For macOS:

   Click **Next**. When the Print dialog appears, specify your model name and other options, and then click **Print**.

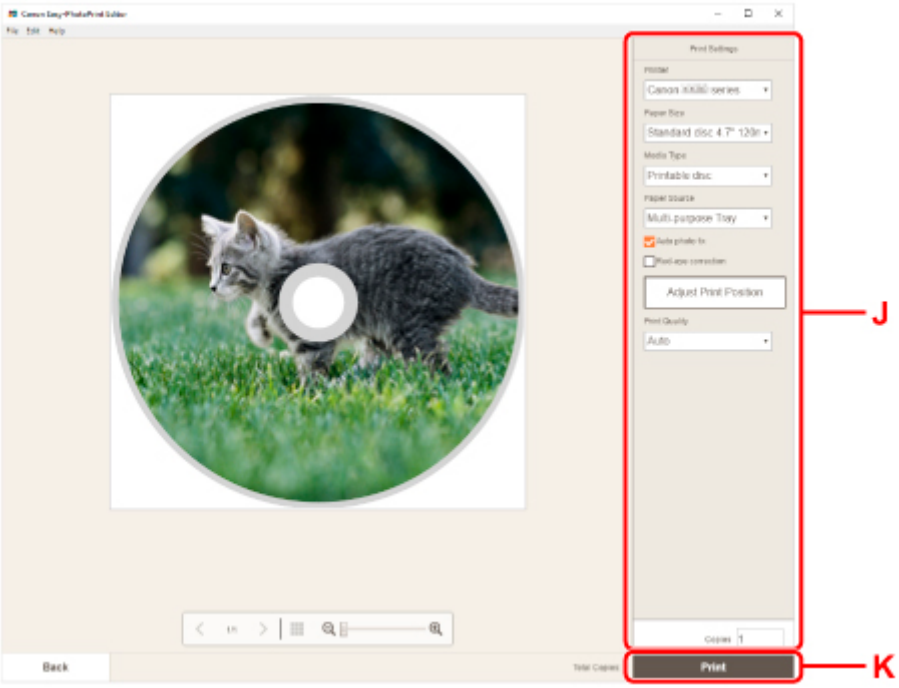

11. When message prompting you to load printable disc appears on printer's touch screen, remove cassette from printer and then detach multi-purpose tray from back of cassette.

Insert the removed cassette back into the printer.

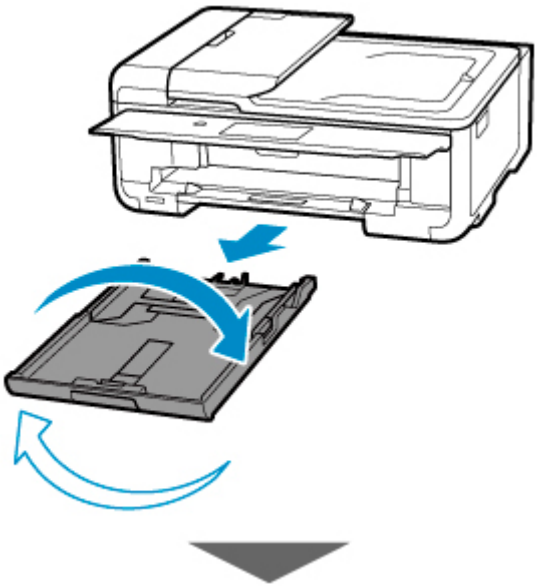

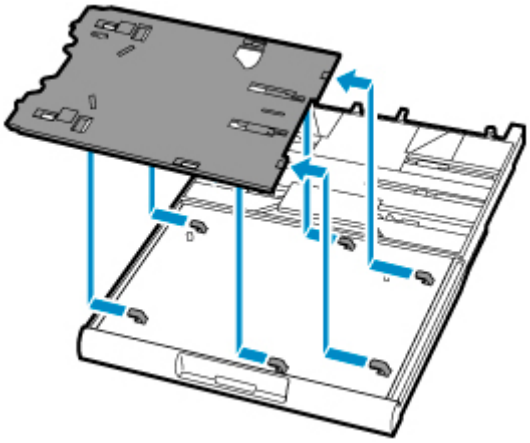

12. Open multi-purpose tray guide (L) and completely press it down.

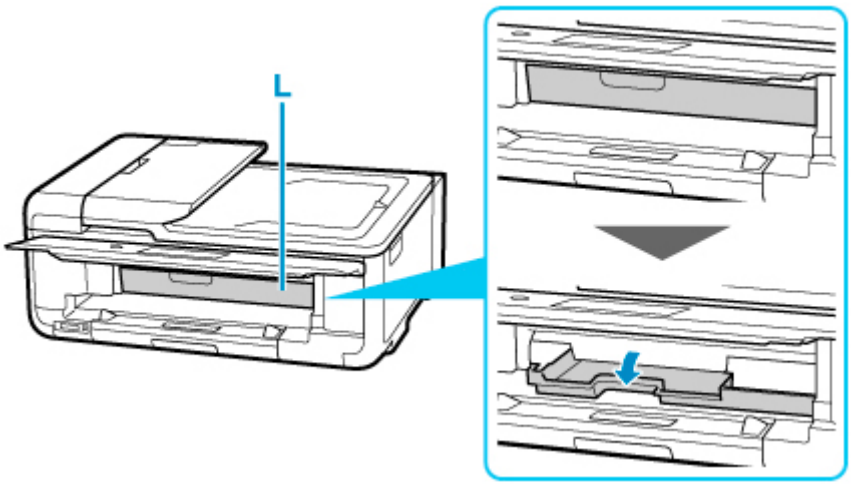

13. Place printable disc on multi-purpose tray.

1. WITH PRINT SIDE FACING UP, place printable disc, and press it against lock (M) at bottom.

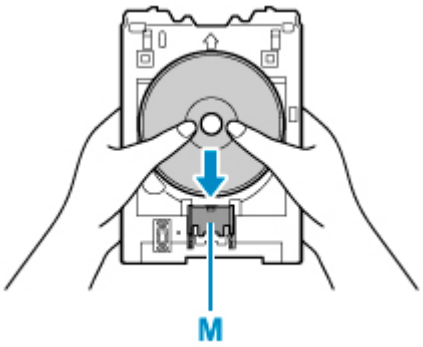

2. While pressing down lock with printable disc, insert top of printable disc into slits (N).

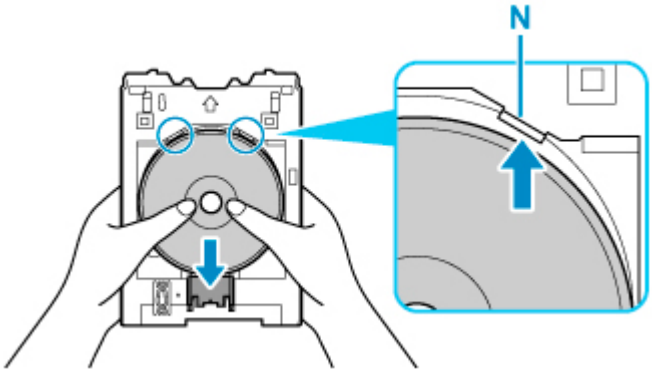

14. Place multi-purpose tray on multi-purpose tray guide.

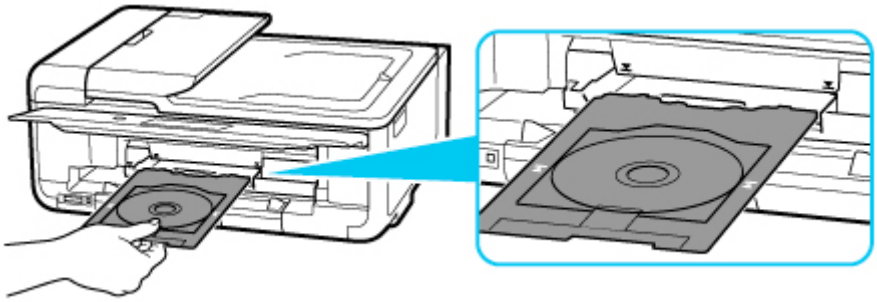

15. Insert multi-purpose tray straight in in horizontal direction until arrow (▼) on multi-purpose tray guide is approximately aligned with arrow (▲) on multi-purpose tray.

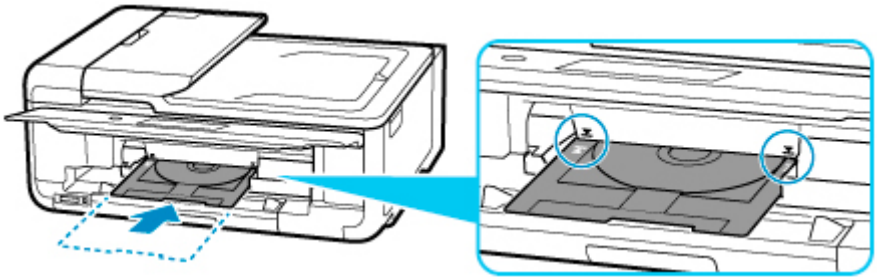

16. Select **OK** on printer's touch screen.

The multi-purpose tray is drawn into the printer and printing will start.

17. After printing is complete, pull multi-purpose tray from printer to remove it.

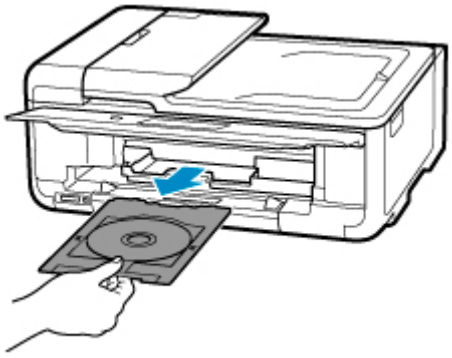

18. While pressing down lock (M), take out printable disc from slits (N) on multi-purpose tray, and remove it.

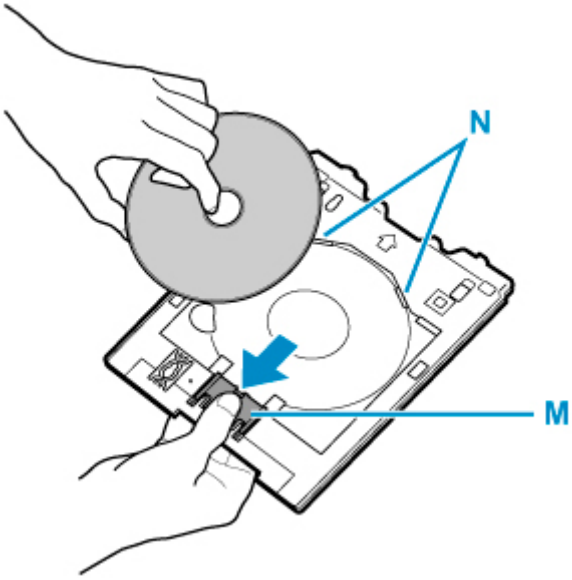

Note

- Easy-PhotoPrint Editor enables you to print photos onto the disc label with various layouts.

  Easy-PhotoPrint Editor Guide

Copying a Disc Label

This section describes how to copy the label of an existing disc (BD/DVD/CD, etc.) and print it onto a printable disc.

1. Select **Copy** (A) on the HOME screen.

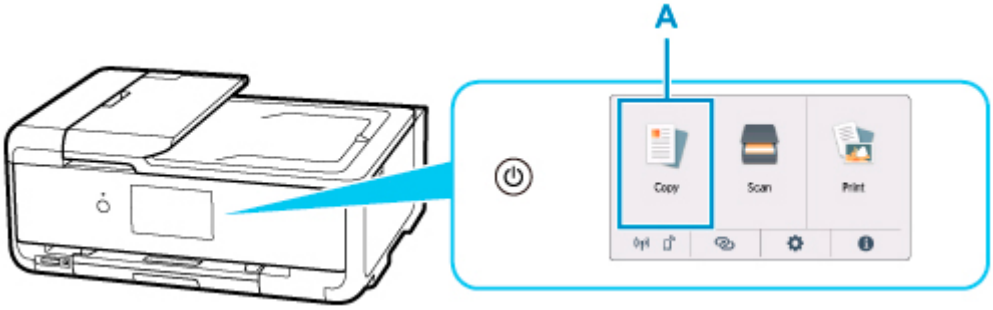

2. Select **Disc label** (B).

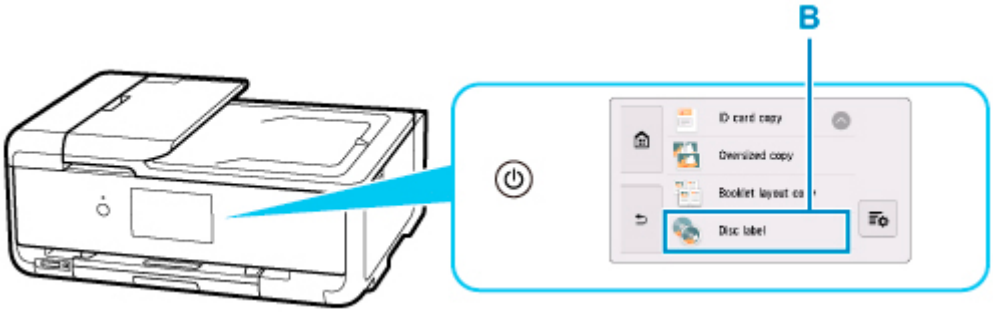

3. Check message and select **OK**.

4. Specify the print area of the printable disc as necessary.

   Select **Outer circle** or **Inner circle** (C), specify the print area, then select **OK** (D).

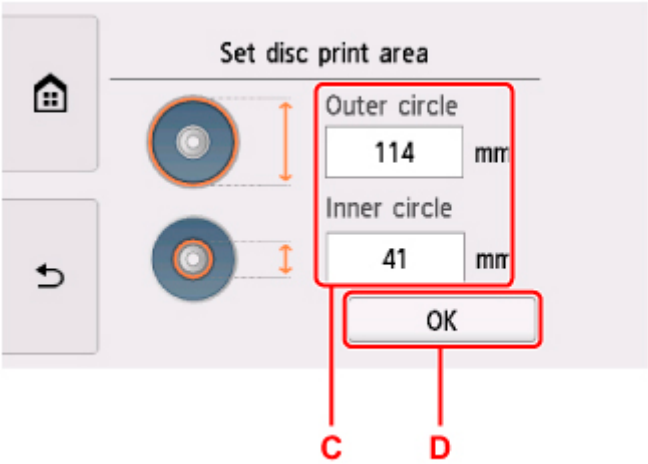

5. Specify the amount of ink (E).

If the print result is blurry, select **Bleed-proof**. Blurring may be reduced by printing with less ink.

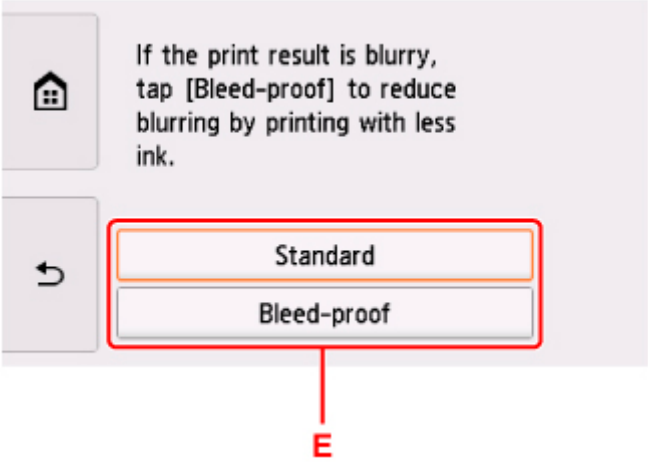

6. Open the document cover (F).

7. Load copy source (BD/DVD/CD, etc.) WITH ITS LABEL SIDE DOWN on platen.

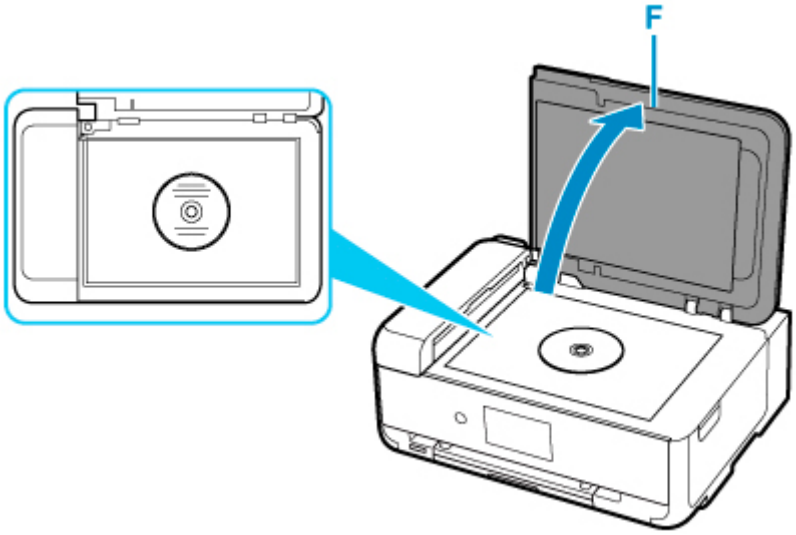

8. Close the document cover.

9. Select **OK** on the touch screen.

10. Open operation panel (G) until horizontal.

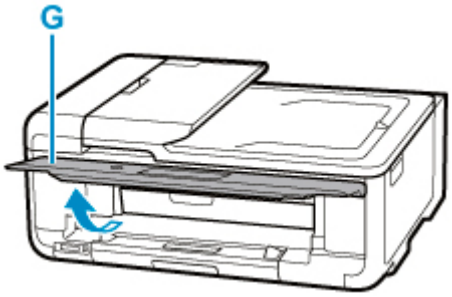

11. Tap **Black** (H) or **Color** (I).

A message prompting you to load the printable disc is displayed.

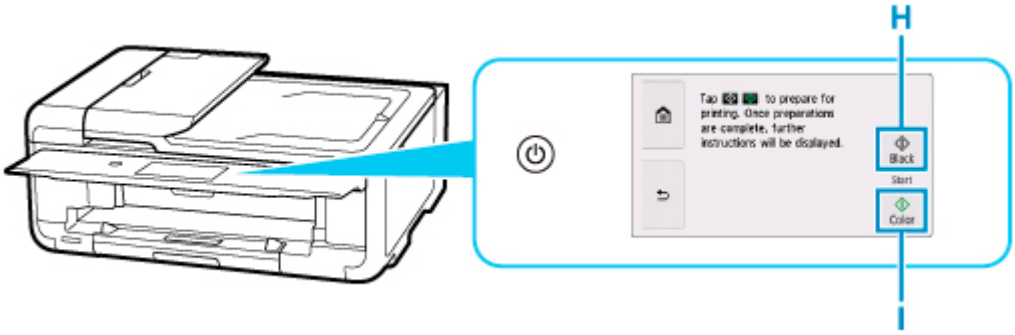

12. Remove cassette from printer and then detach multi-purpose tray from back of cassette.

Insert the removed cassette back into the printer.

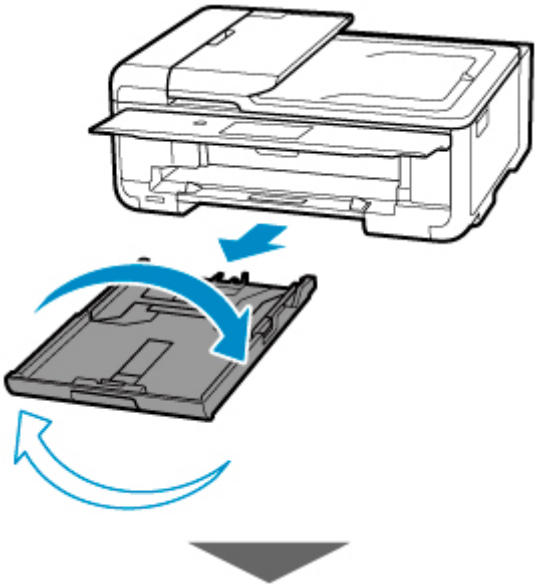

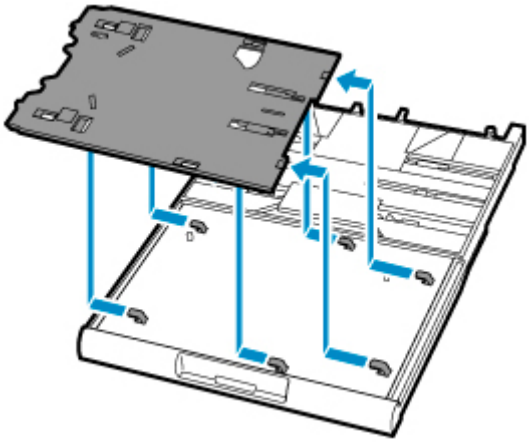

13. Open multi-purpose tray guide (J) and completely press it down.

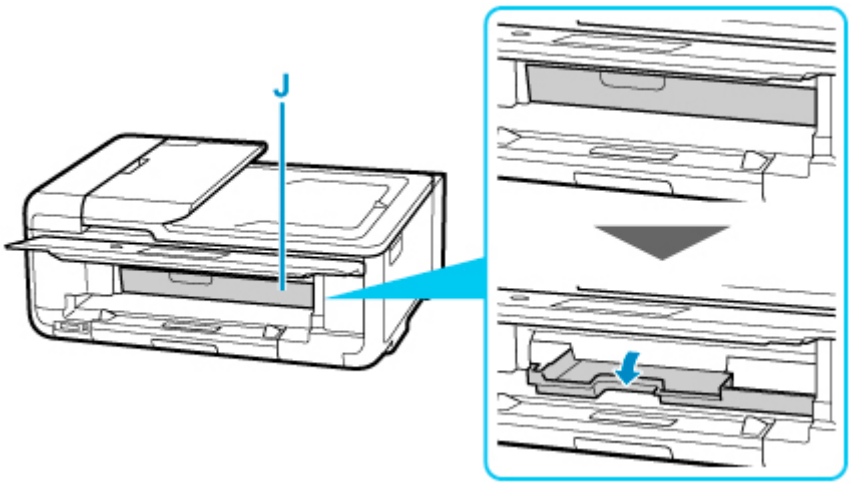

14. Place printable disc on multi-purpose tray.

1. WITH PRINT SIDE FACING UP, place printable disc, and press it against lock (K) at bottom.

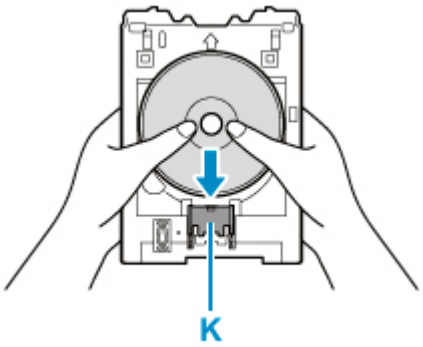

2. While pressing down lock with printable disc, insert top of printable disc into slits (L).

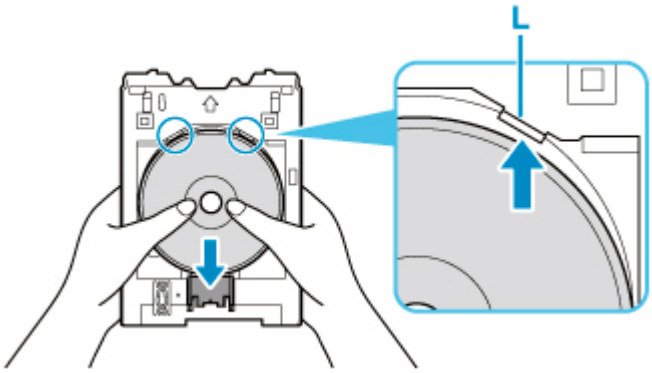

15. Place multi-purpose tray on multi-purpose tray guide.

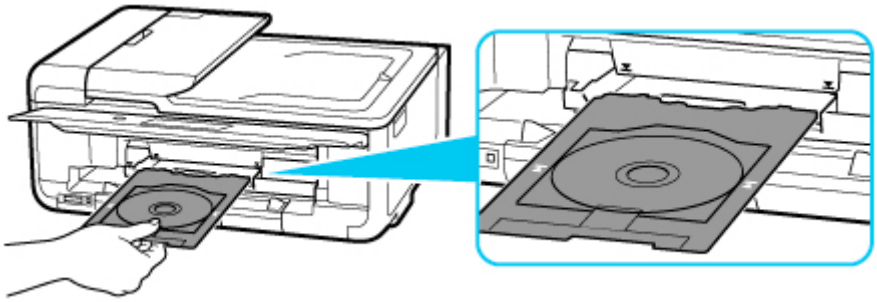

16. Insert multi-purpose tray straight in in horizontal direction until arrow (▼) on multi-purpose tray guide is approximately aligned with arrow (▲) on multi-purpose tray.

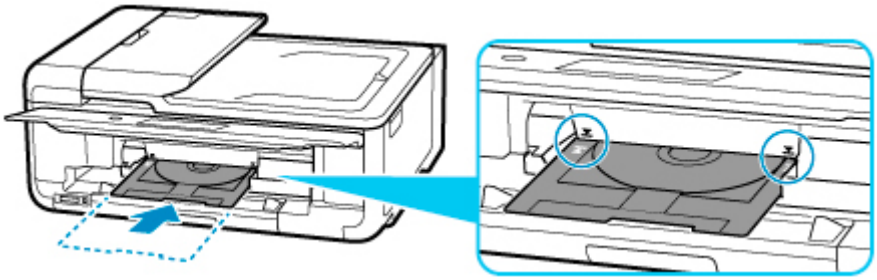

17. Select **OK** on the touch screen.

The multi-purpose tray is drawn into the printer and copying will start.

Important

- Do not open the document cover until copying is complete.

18. After copying is complete, pull multi-purpose tray from printer to remove it.

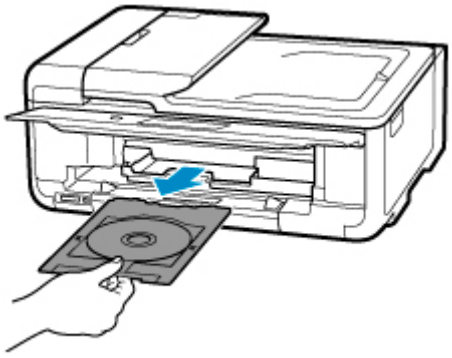

19. While pressing down lock (K), take out printable disc from slits (L) on multi-purpose tray, and remove it.

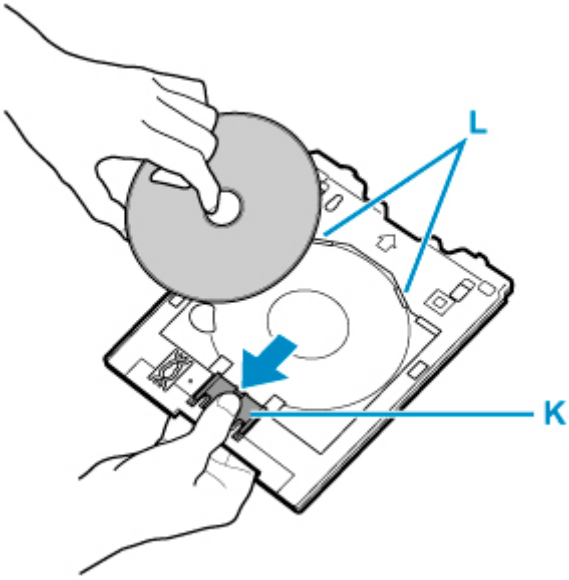

Note

- Your printer is equipped with many other disc label print features.

  Disc Label Printing

Network

Available Connection Methods

The following connection methods are available on the printer.

- Wireless Connection
  Connect the printer and devices (e.g. computer/smartphone/tablet) using a wireless router.

  If you have a wireless router, we recommend you use one for wireless connection.

  - Connection methods vary depending on the wireless router type.
  - You can change network settings such as the network name (SSID) and security protocol on the printer.
  - When the connection between a device and a wireless router is completed and (Wi-Fi icon) is displayed in the device's screen, you can connect the device to the printer using the wireless router.

- Wireless Direct
  Connect the printer and devices (e.g. computer/smartphone/tablet) without using a wireless router.

  - While you are using the printer with Wireless Direct, Internet connection from the printer becomes unavailable. In that case, web services for the printer cannot be used.
  - If you connect a device connected to the Internet via a wireless router to the printer that is in the Wireless Direct, the connection between the device and wireless router will be disabled. In that case, the connection of the device may switch to a mobile data connection automatically depending on your device. Transmission fees for connecting to the Internet using a mobile data connection apply.
  - In the Wireless Direct, you can connect up to five devices at the same time. If you try to connect a sixth device while five devices are already connected, an error will appear. If an error appears, disconnect a device you do not use and configure settings again.
  - Network settings such as the network name (SSID) and security protocol are specified automatically.

- Wired Connection
  Connect the printer and hub/router using a LAN cable. Prepare a LAN cable.

  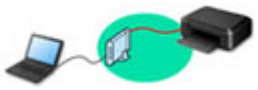

Note

- You can connect the printer and computer using a USB cable (USB connection). Prepare a USB cable. For details, see Connects to Another Computer via LAN/Changes from USB to LAN Connection.

Network Connection Settings/Setup

Perform connection setup for the printer and computer/smartphone/tablet.

For more on setup procedure, click here.

Changing Network Settings

See below for changing connection settings for the printer and computer/smartphone/tablet.

- To change network connection method:
  - Reconfiguration Method of LAN Connection/Reconfiguration Method of Wi-Fi Connection
  - Changing the Connection Mode
- To add computer/smartphone/tablet to the printer:
  - Connects to Another Computer via LAN/Changes from USB to LAN Connection
- To use Wireless Direct temporarily:
  - Printing/Scanning with Wireless Direct

IJ Network Device Setup Utility

IJ Network Device Setup Utility checks or diagnoses the settings of the printer and those of computer and restores the status of them if anything is wrong with network connection. Select either link below to download IJ Network Device Setup Utility.

- Checking Printer Connection Status Using IJ Network Device Setup Utility
- Performing/Changing Network Settings (Windows)

  For Windows, you can perform network settings using IJ Network Device Setup Utility.

  - IJ Network Device Setup Utility (Windows)
- Diagnosing and Repairing Network Settings (Windows/macOS)

  You can diagnose or repair network settings using IJ Network Device Setup Utility.

  - For Windows:
    - IJ Network Device Setup Utility (Windows)
  - For macOS:
    - IJ Network Device Setup Utility (macOS)

Network Connection Tips

See below for tips on using the printer via network connection.

- Network Connection Tips
- Handling Printer Configuration using the Web Browser

Troubleshooting

See Network Settings and Common Problems for troubleshooting on network connection.

Notice/Restriction

See below for details.

- Restrictions on network settings:
  - Restrictions
- Notices when printing using web service:
  - Notice for Web Service Printing

Restrictions

When connecting another device while a device (such as a computer) is already connected to the printer, connect it using the same connection method as the connected device.
If you connect using a different connection method, the connection to the device in use will be disabled.

Connection Using a Wired Network cannot be performed on printers that do not support a wired connection.

Connect via wireless router

- You cannot establish a printer with wireless and wired connections at the same time.
- Make sure your device and the wireless router are connected. For details on checking these settings, see the manual supplied with the wireless router or contact its manufacturer.
  As for a device already connected to the printer without using a wireless router, reconnect it via a wireless router.
- Configuration, router functions, setup procedures and security settings of wireless routers vary depending on the system environment. For details, see the manual for your wireless router or contact its manufacturer.
- This printer does not support IEEE802.11ac. IEEE802.11a and IEEE802.11n (5 GHz) may not be supported depending on the country or region you live in. Check if your device supports IEEE802.11n, IEEE802.11g, IEEE802.11b or IEEE802.11a.
- If your device is set to the "IEEE802.11n only" mode, WEP or TKIP cannot be used as a security protocol. Change the security protocol for your device to something other than WEP and TKIP or change the setting to something other than "IEEE802.11n only."
  The connection between your device and the wireless router will be temporarily disabled while the setting is changed. Do not proceed to the next screen of this guide until setup is complete.
- For office use, consult your network administrator.
- Note that if you connect to a network with no security protection, your personal information could be disclosed to a third party.

Wireless Direct

Important

- If a device is connected to the Internet via a wireless router, and you then connect it to a printer in Wireless Direct mode, the existing connection between the device and wireless router will be disabled. In that case, the connection of the device may switch to a mobile data connection automatically depending on your device. When you connect to the Internet using a mobile data connection, charges may apply depending on your contract.
  - When you connect a device and the printer using Wireless Direct, the connection information will be saved to Wi-Fi settings. The device may be connected to the printer automatically even after disconnecting it or connecting it to another wireless router.
  - To prevent automatic connection to the printer in Wireless Direct mode, change the connection mode after using the printer, or set not to connect automatically in the Wi-Fi settings of the device.
    For details on checking or changing the wireless router settings, see the wireless router manual or contact its manufacturer.

- If you connect a device and the printer using Wireless Direct, Internet connection may become unavailable depending on your environment. In that case, web services for the printer cannot be used.
- In Wireless Direct mode, you can connect up to five devices at the same time. If you try to connect a sixth device while five devices are already connected, an error will appear.
  If an error appears, disconnect a device that does not use the printer, then configure settings again.
- Devices connected to the printer using Wireless Direct cannot communicate with each other.
- Firmware updates for the printer are not available while using Wireless Direct.
- When a device has been connected to the printer without using a wireless router and you want to set it up again using the same connection method, disconnect it first. Disable the connection between the device and printer in the Wi-Fi setting screen.

Connection Using a Wired Network

- You cannot establish a printer with wireless and wired connections at the same time.
- When using a router, connect the printer and a device to the LAN side (same network segment).

Network Connection Tips

- Default Network Settings
- Detect Same Printer Name
- Connects to Another Computer via LAN/Changes from USB to LAN Connection
- Printing Network Settings
- Reconfiguration Method of LAN Connection/Reconfiguration Method of Wi-Fi Connection

Default Network Settings

LAN Connection Defaults

Item	Default
Enable/Disable LAN	Disable LAN
Network name (SSID)	BJNPSETUP
Wi-Fi security	**Disable**
IP address (IPv4)	**Auto setup**
IP address (IPv6)	Auto setup
Set printer name*	XXXXXXXXXXXX
Enable/disable IPv6	**Enable**
Enable/disable WSD	**Enable**
Timeout setting	**15 minutes**
Enable/disable Bonjour	**Enable**
Service name	Canon TS9500 series
LPR protocol setting	**Enable**
RAW protocol	**Enable**
LLMNR	**Enable**
PictBridge communication	**Enable**
Wired LAN DRX setting	**Enable**

("XX" represents alphanumeric characters.)

* Default value depends on printer. To check value, use operation panel.

LAN settings

Wireless Direct Defaults

Item	Default
Network (SSID)/device name	DIRECT-abXX-TS9500series *1
Password	YYYYYYYYYY *2
Wi-Fi security	**WPA2-PSK (AES)**
Connection request confirmation	Displayed

*1 "ab" is specified at random and "XX" represents last two digits of printer's MAC address. (The value is specified when the printer is turned on for the first time.)

*2 The password is specified automatically when the printer is turned on for the first time.

Detect Same Printer Name

When the printer is detected during setup, plural printers with the same name may appear on the results screen.

Select a printer with checking the printer settings against those on detection result screen.

- For Windows:

  Check the printer's MAC address or serial to select the correct printer from the results.

- For macOS:

  The printer names appear with the MAC address added at the end or as the printer name specified by Bonjour.

  Check identifiers such as the MAC address, the printer name specified by Bonjour, and the printer's serial number to select the printer from among those that appear.

Note

- Serial number may not appear on result screen.

Check the printer's MAC address and the serial number by one of the following methods.

- Display on the touch screen.

  MAC address

  LAN settings

  Serial number

  System information

- Print the network settings.

  Printing Network Settings

Connects to Another Computer via LAN/Changes from USB to LAN Connection

- For Windows:
- For macOS:

For Windows:

To add a computer to connect to the printer on a LAN or to change from USB to LAN connection, perform setup using the Setup CD-ROM or from the web page.

For macOS:

To connect an additional computer to the printer via LAN, or to change from USB to LAN connection, perform setup from the web page.

Printing Network Settings

Use the operation panel to print the printer's current network settings.

Important

- The network settings printout contains important information about your network. Handle it with care.

1. Check that printer is turned on, and display HOME screen.

   If the HOME screen is not displayed, touch the HOME button.

2. Load three sheets of A4 or Letter-sized plain paper.

3. Select (**Setup**) icon on HOME screen.

4. Select **Device settings**.

5. Select **LAN settings**.

6. Select **Print details**.

7. Check message and select **Yes**.

8. Check message and select **ON** or **OFF**.

   The printer starts printing the network setting information.

The following information on the printer's network setting is printed out. (Some setting values are not displayed depending on the printer settings.)

Item Number	Item	Description	Setting
1	Product Information	Product information	–
1-1	Product Name	Product name	XXXXXXXX
1-2	ROM Version	ROM version	XXXXXXXX
1-3	Serial Number	Serial number	XXXXXXXX
2	Network Diagnostics	Network diagnostics	—
2-1	Diagnostic Result	Diagnostic result	XXXXXXXX
2-2	Result Codes	Result codes	XXXXXXXX
2-3	Result Code Details	Result code details	http://canon.com/ijnwt

3	Wireless LAN	Wireless LAN	Enable/Disable
3-2	Infrastructure	Infrastructure	Enable/Disable
3-2-1	Signal Strength	Signal strength	0 to 100 [%]
3-2-2	Link Quality	Link quality	0 to 100 [%]
3-2-3	Frequency	Frequency	XX (GHz)
3-2-4	MAC Address	MAC address	XX:XX:XX:XX:XX:XX
3-2-5	Connection	Connection status	Active/Inactive
3-2-6	SSID	SSID	Wireless LAN network name (SSID)
3-2-7	Channel	Channel	XX (1 to 13)
3-2-8	Encryption	Encryption method	None/WEP/TKIP/AES
3-2-9	WEP Key Length	WEP key length (bits)	Inactive/128/64
3-2-10	Authentication	Authentication method	None/auto/open/shared/WPA-PSK/WPA2-PSK
3-2-11	TCP/IPv4	TCP/IPv4	Enable
3-2-12	IP Address	IP address	XXX.XXX.XXX.XXX
3-2-13	Subnet Mask	Subnet mask	XXX.XXX.XXX.XXX
3-2-14	Default Gateway	Default gateway	XXX.XXX.XXX.XXX
3-2-15	TCP/IPv6	TCP/IPv6	Enable/Disable
3-2-16	Link Local Address	Link local address	XXXX:XXXX:XXXX:XXXX XXXX:XXXX:XXXX:XXXX
3-2-17	Link Local Prefix Length	Link local prefix length	XXX
3-2-18	Stateless Address1	Stateless address 1	XXXX:XXXX:XXXX:XXXX XXXX:XXXX:XXXX:XXXX
3-2-19	Stateless Prefix Length1	Stateless prefix length 1	XXX
3-2-20	Stateless Address2	Stateless address 2	XXXX:XXXX:XXXX:XXXX XXXX:XXXX:XXXX:XXXX
3-2-21	Stateless Prefix Length2	Stateless prefix length 2	XXX
3-2-22	Stateless Address3	Stateless address 3	XXXX:XXXX:XXXX:XXXX XXXX:XXXX:XXXX:XXXX

3-2-23	Stateless Prefix Length3	Stateless prefix length 3	XXX
3-2-24	Stateless Address4	Stateless address 4	XXXX:XXXX:XXXX:XXXX XXXX:XXXX:XXXX:XXXX
3-2-25	Stateless Prefix Length4	Stateless prefix length 4	XXX
3-2-26	Default Gateway1	Default gateway 1	XXXX:XXXX:XXXX:XXXX XXXX:XXXX:XXXX:XXXX
3-2-27	Default Gateway2	Default gateway 2	XXXX:XXXX:XXXX:XXXX XXXX:XXXX:XXXX:XXXX
3-2-28	Default Gateway3	Default gateway 3	XXXX:XXXX:XXXX:XXXX XXXX:XXXX:XXXX:XXXX
3-2-29	Default Gateway4	Default gateway 4	XXXX:XXXX:XXXX:XXXX XXXX:XXXX:XXXX:XXXX
3-2-33	IPsec	IPsec setting	Active
3-2-34	Security Protocol	Security method	ESP/ESP & AH/AH
3-3	Wireless Direct	Operation mode for Wireless Direct	Enable/Disable
3-3-1	MAC Address	MAC address	XX:XX:XX:XX:XX:XX
3-3-2	Connection	Connection status	Active/Inactive
3-3-3	SSID	SSID	Wireless Direct network name (SSID)
3-3-4	Password	Password	Wireless Direct password (10 alphanumeric characters)
3-3-5	Channel	Channel	3
3-3-6	Encryption	Encryption method	AES
3-3-7	Authentication	Authentication method	WPA2-PSK
3-3-8	TCP/IPv4	TCP/IPv4	Enable
3-3-9	IP Address	IP address	XXX.XXX.XXX.XXX
3-3-10	Subnet Mask	Subnet mask	XXX.XXX.XXX.XXX
3-3-11	Default Gateway	Default gateway	XXX.XXX.XXX.XXX
3-3-12	TCP/IPv6	TCP/IPv6	Enable/Disable
3-3-13	Link Local Address	Link local address	XXXX:XXXX:XXXX:XXXX XXXX:XXXX:XXXX:XXXX

3-3-14	Link Local Prefix Length	Link local prefix length	XXX
3-3-15	IPsec	IPsec setting	Active
3-3-16	Security Protocol	Security method	–
4	Wired LAN	Wired LAN	Enable/Disable
4-1	MAC Address	MAC address	XX:XX:XX:XX:XX:XX
4-2	Connection	Wired LAN status	Active/Inactive
4-3	TCP/IPv4	TCP/IPv4	Enable
4-4	IP Address	IP address	XXX.XXX.XXX.XXX
4-5	Subnet Mask	Subnet mask	XXX.XXX.XXX.XXX
4-6	Default Gateway	Default gateway	XXX.XXX.XXX.XXX
4-7	TCP/IPv6	TCP/IPv6	Enable/Disable
4-8	Link Local Address	Link local address	XXXX:XXXX:XXXX:XXXX XXXX:XXXX:XXXX:XXXX
4-9	Link Local Prefix Length	Link local prefix length	XXX
4-10	Stateless Address1	Stateless address 1	XXXX:XXXX:XXXX:XXXX XXXX:XXXX:XXXX:XXXX
4-11	Stateless Prefix Length1	Stateless prefix length 1	XXX
4-12	Stateless Address2	Stateless address 2	XXXX:XXXX:XXXX:XXXX XXXX:XXXX:XXXX:XXXX
4-13	Stateless Prefix Length2	Stateless prefix length 2	XXX
4-14	Stateless Address3	Stateless address 3	XXXX:XXXX:XXXX:XXXX XXXX:XXXX:XXXX:XXXX
4-15	Stateless Prefix Length3	Stateless prefix length 3	XXX
4-16	Stateless Address4	Stateless address 4	XXXX:XXXX:XXXX:XXXX XXXX:XXXX:XXXX:XXXX
4-17	Stateless Prefix Length4	Stateless prefix length 4	XXX
4-18	Default Gateway1	Default gateway 1	XXXX:XXXX:XXXX:XXXX

			XXXX:XXXX:XXXX:XXXX
4-19	Default Gateway2	Default gateway 2	XXXX:XXXX:XXXX:XXXX XXXX:XXXX:XXXX:XXXX
4-20	Default Gateway3	Default gateway 3	XXXX:XXXX:XXXX:XXXX XXXX:XXXX:XXXX:XXXX
4-21	Default Gateway4	Default gateway 4	XXXX:XXXX:XXXX:XXXX XXXX:XXXX:XXXX:XXXX
4-25	IPsec	IPsec setting	Active
4-26	Security Protocol	Security method	ESP/ESP & AH/AH
4-27	Wired LAN DRX	Discontinuous reception (wired LAN)	Enable/Disable
5	Other Settings	Other settings	–
5-1	Printer Name	Printer name	Printer name (Up to 15 alphanumeric characters)
5-2	Wireless Direct Dev-Name	Device name for wireless direct	Device name for wireless direct (Up to 32 alphanumeric characters)
5-4	WSD Printing	WSD printing setting	Enable/Disable
5-5	WSD Timeout	Timeout	1/5/10/15/20 [min]
5-6	LPD Printing	LPD printing setting	Enable/Disable
5-7	RAW Printing	RAW printing setting	Enable/Disable
5-9	Bonjour	Bonjour setting	Enable/Disable
5-10	Bonjour Service Name	Bonjour service name	Bonjour service name (Up to 52 alphanumeric characters)
5-11	LLMNR	LLMNR setting	Enable/Disable
5-12	SNMP	SNMP setting	Enable/Disable
5-13	PictBridge Commun.	PictBridge Communication	Enable/Disable
5-14	DNS Server	Obtain DNS server address automatically	Auto/Manual
5-15	Primary Server	Primary server address	XXX.XXX.XXX.XXX
5-16	Secondary Server	Secondary server address	XXX.XXX.XXX.XXX
5-17	Proxy Server	Proxy server setting	Enable/Disable
5-18	Proxy Address	Proxy address	XXXXXXXXXXXXXXXXXXXX

5-19	Proxy Port	Proxy port specification	1 to 65535
5-20	Cert. Fingerprt(SHA-1)	Certificate finger-print(SHA-1)	xxxxxxxx xxxxxxxx xxxxxxxx xxxxxxxx xxxxxxxx
5-21	Cert. Fin-gerprt(SHA-256)	Certificate finger-print(SHA-256)	xxxxxxxx xxxxxxxx xxxxxxxx xxxxxxxx xxxxxxxx xxxxxxxx xxxxxxxx xxxxxxxx
6	Bluetooth	Bluetooth settings	—
6-1	Bluetooth Setting	Bluetooth	Enable/Disable
6-3	Bluetooth Device Ad-dress	Bluetooth device ad-dress of the printer	XXXXXXXX
6-5	Bluetooth Device Name	Bluetooth device name of the printer	XXXXXXXX
7	Printer Log Service	Printer log service	—
7-1	Unsent Usage Logs	Number of unsent us-age logs	0 to 200
7-2	Usage Log Last Sent	Last date when usage log was sent	XXXXXXXX
7-3	Point Service	Registration status	Active/Awaiting Activation/No Active Service

("XX" represents alphanumeric characters.)

Reconfiguration Method of LAN Connection/Reconfiguration Method of Wi-Fi Connection

- Reconfiguration Method of LAN Connection
- Reconfiguration Method of Wi-Fi Connection

Reconfiguration Method of LAN Connection

Follow either procedure below to change LAN connection method (wired or Wi-Fi).

- **For Windows:**
  - Redo setup using the Setup CD-ROM or from the web page.
  - Select (**Setup**) icon on HOME screen, select **Device settings** -> **LAN settings** and then select **Wi-Fi** -> **Settings** -> **Enable/disable Wi-Fi** -> **Enable** to enable Wi-Fi, or select **Device settings** -> **LAN settings** and then select **Wired LAN** -> **Settings** -> **Enable/disable Wired LAN** -> **Enable** to enable wired LAN.

    After that, perform settings on the **Network Settings** screen on IJ Network Device Setup Utility.

    For details, refer to Performing/Changing Wi-Fi Settings or Performing/Changing Wired LAN Connection (Ethernet Cable) Settings.
- **For macOS:**
  - Redo setup from the web page.

Reconfiguration Method of Wi-Fi Connection

Follow either procedure below to change Wi-Fi connection method (infrastructure or Wireless Direct).

- **For Windows:**
  - Redo setup using the Setup CD-ROM or from the web page.
  - Perform settings on the **Network Settings** screen on IJ Network Device Setup Utility.

Important

- Before you perform settings using IJ Network Device Setup Utility, turn on Easy wireless connect mode on the printer following the procedure below.

  1. Check that printer is turned on.
  2. Select (**Wireless connect**).

     Using the Operation Panel
  3. Select **Yes** on the displayed screen.

     Follow instructions on your smartphone or tablet.

4. If message saying setup is completed appears, select **OK**.

- **For macOS:**

  Redo setup from the web page.

IJ Network Device Setup Utility (macOS)

- IJ Network Device Setup Utility
- Starting Up IJ Network Device Setup Utility
- Diagnosing and Repairing Network Settings
- List of Models Which Does Not Support Diagnosis and Repair Function

IJ Network Device Setup Utility

If anything is wrong with connection, IJ Network Device Setup Utility diagnoses the settings of the printer and those of computer on which it is installed. In addition, IJ Network Device Setup Utility restores the status of the printer and computer.

Important

- To use the printer over LAN, make sure you have the equipment necessary for the connection type, such as a wireless router or a LAN cable.
- When you install IJ Network Device Setup Utility, disable block function of firewall.

Starting Up IJ Network Device Setup Utility

Start up **Launchpad**, select **Canon Utilities**, and then select IJ Network Device Setup Utility.

When you start up IJ Network Device Setup Utility, the screen below appears.

Enter the password specified for your computer and select **Install Helper**. IJ Network Device Setup Utility starts diagnosis and repair of network.

- Diagnosing and Repairing Network Settings

Diagnosing and Repairing Network Settings

IJ Network Device Setup Utility diagnoses and repairs computer settings or connection between the computer and printer when a problem (e.g. cannot print from a printer on the network) occurs.

Important

- Some models do not support diagnosis and repair function.

  For details:

  List of Models Which Does Not Support Diagnosis and Repair Function

IJ Network Device Setup Utility starts checking the computer settings when it starts up. Perform operations following the instructions on the screen.

Note

- This function checks the following items:
  - whether the computer is connected to the router
  - whether the printer can be detected on the network
  - whether the signal strength or communication level is sufficient (when using Wi-Fi)
  - whether the printer port setting matches with the network setting

List of Models Which Does Not Support Diagnosis and Repair Function

The following models does not support "Diagnose and Repair" function of IJ Network Device Setup Utility.

- G4000 series
- PRO-500 series
- PRO-1000 series
- MB2100 series
- MB2700 series
- MB5100 series
- MB5400 series
- iB4000 series
- PRO-520
- PRO-540
- PRO-560
- PRO-540S
- PRO-560S
- PRO-2000
- PRO-4000
- PRO-6000
- PRO-4000S
- PRO-6000S
- TS9000 series
- TS8000 series
- TS6000 series
- TS5000 series
- MG3000 series
- E470 series

Handling Paper, Originals, Ink Tanks, Multi-purpose Tray, Memory Card, etc.

- Loading Paper
- Placing Multi-purpose Tray
- Loading Originals
- Inserting the Memory Card
- Replacing Ink Tanks

Loading Paper

- Paper Sources
- Loading Paper in the Rear Tray
- Loading Paper in the Cassette
- Loading Envelopes in Rear Tray

Paper Sources

The printer has two paper sources for feeding paper, the rear tray (A) and cassette (B).

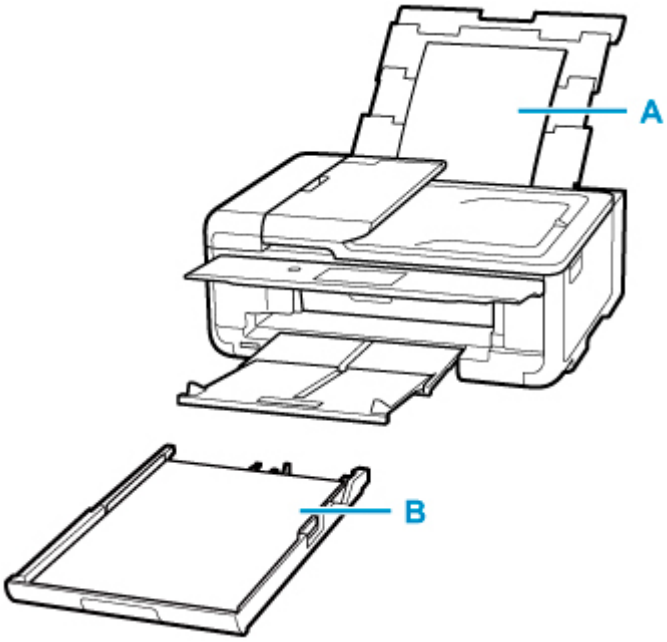

You can load all supported paper on the rear tray.

- Supported Media Types

You can load A4, B5, A5, or Letter-sized plain paper in the cassette.

Note

- When printing, select the correct page size and media type. If you select the wrong page size or media type, the printer may feed paper from the wrong paper source or may not print with the proper print quality.

  For details on how to load paper in each paper source, see below.

  - Loading Paper in the Rear Tray
  - Loading Paper in the Cassette
  - Loading Envelopes in Rear Tray

Loading Paper in the Rear Tray

You can load plain paper or photo paper.

You can also load envelopes on the rear tray.

Loading Envelopes in Rear Tray

Important

- If you cut plain paper to a size of 5" x 7" (13 x 18 cm) or smaller to perform a trial print, it may cause a paper jam.

Note

- We recommend Canon genuine photo paper for printing photos.

  For details on the Canon genuine paper, see Supported Media Types.
- You can use general copy paper or Canon Red Label Superior WOP111/Canon Océ Office Colour Paper SAT213.

  For the page size and paper weight you can use for this printer, see Supported Media Types.

1. Prepare paper.

Align the edges of paper. If paper is curled, flatten it.

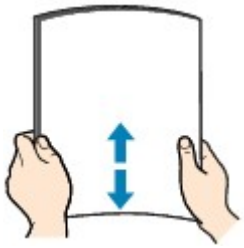

Note

- Align the edges of paper neatly before loading. Loading paper without aligning the edges may cause paper jams.
- If paper is curled, hold the curled corners and gently bend them in the opposite direction until the paper becomes completely flat.

  For details on how to flatten curled paper, see Check3 in Paper Is Smudged / Printed Surface Is Scratched.
- When using Photo Paper Plus Semi-gloss SG-201, even if the sheet is curled, load one sheet at a time as it is. If you roll up this paper to flatten, this may cause cracks on the surface of the paper and reduce the print quality.

2. Open rear tray cover (A). Pull straight up and fold back paper support (B).

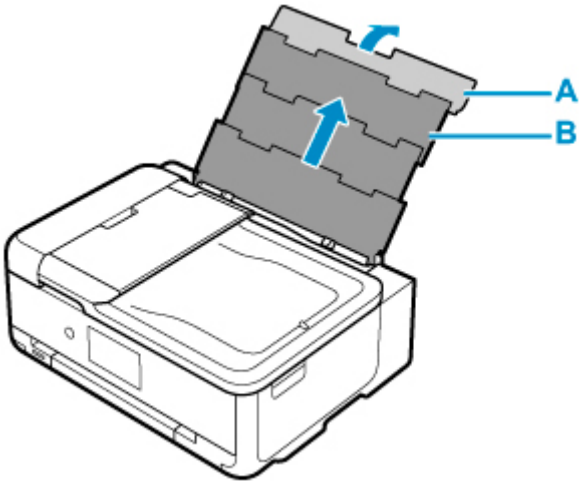

3. Open the feed slot cover (C).

4. Slide right paper guide (D) to open both paper guides.

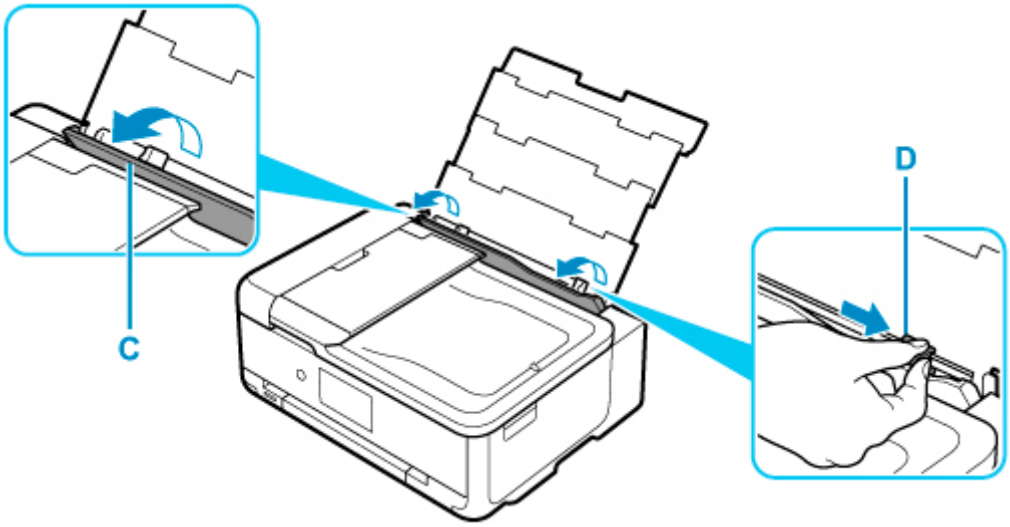

5. Load paper stack in portrait orientation WITH PRINT SIDE FACING UP.

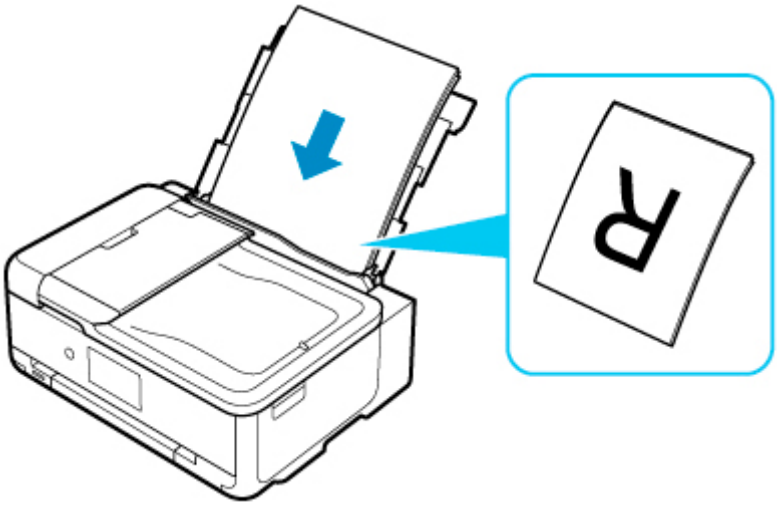

6. Slide right paper guide (D) to align with both sides of paper stack.

Do not slide the paper guides too hard against the paper. The paper may not be fed properly.

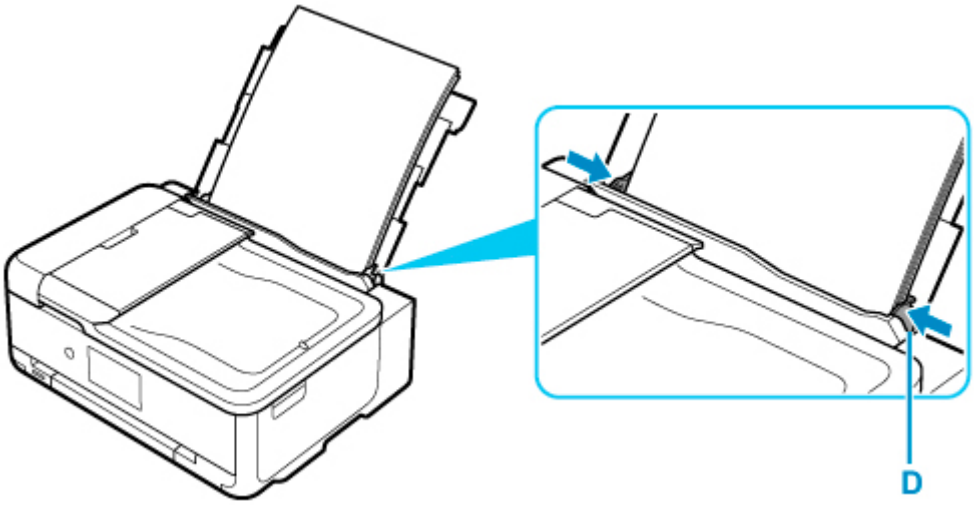

Important

- Always load paper in portrait orientation (E). Loading paper in landscape orientation (F) can cause paper jams.

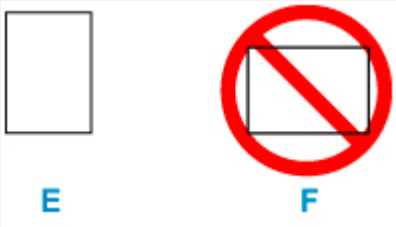

Note

- Do not load sheets of paper higher than the load limit mark (G).

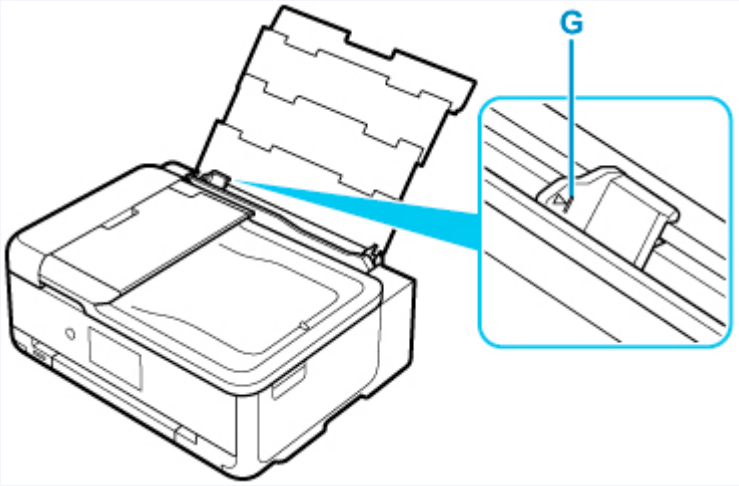

7. Close feed slot cover (C) gently.

Important

- If the feed slot cover is open, paper cannot be fed. Be sure to close the feed slot cover.

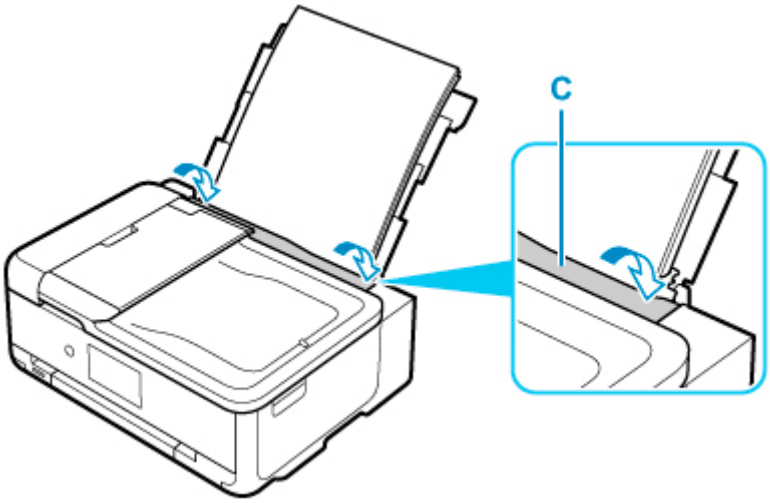

After closing the feed slot cover, the paper setting confirmation screen for the rear tray appears on the touch screen.

8. If page size and media type on touch screen match size and type of paper loaded in rear tray, select **Yes**.

If not, select **Change** to change the settings in accordance with the size and type of the loaded paper.

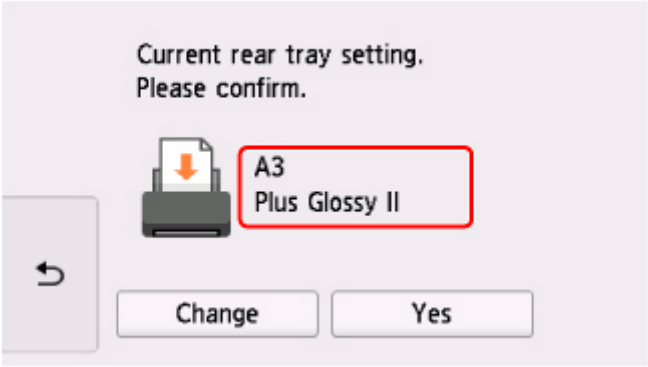

9. Open operation panel (H), and then pull out paper output tray (I) and paper output support (J).

Be sure to open the operation panel before printing. If the operation panel is close, the printer does not start printing.

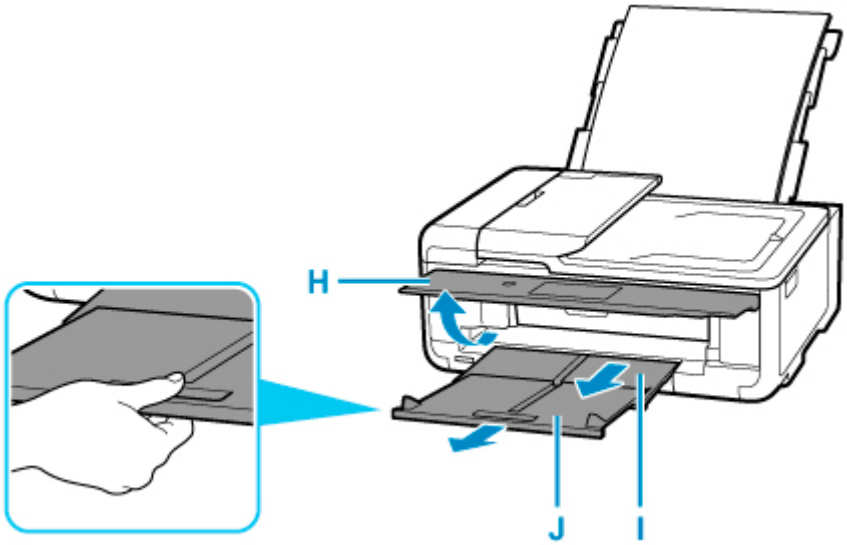

Note

- There are various types of paper, such as paper with a special surface coating for printing photos at optimal quality and paper suitable for documents. Each media type has specific preset settings (how ink is used and sprayed, distance from nozzles, etc.), that allow you to print to that type with optimal image quality. The wrong paper settings may cause poor printout color quality or scratches on the printed surface. If you notice blurring or uneven colors, increase the print quality setting and try printing again.
- To prevent incorrect printing, this printer has a function that detects whether the settings for the paper loaded on the rear tray matches the paper settings. Before printing, make print settings in accordance with the paper settings. When this function is enabled, an error message is displayed if these settings do not match to prevent incorrect printing. When this error message is displayed, check and correct the paper settings.

Loading Paper in the Cassette

You can load A4, B5, A5, or Letter-sized plain paper in the cassette.

Note

- In the cassette, be sure to load only plain paper.
- You can use general copy paper or Canon Red Label Superior WOP111/Canon Océ Office Colour Paper SAT213.

  For the page size and paper weight you can use for this printer, see Supported Media Types.

1. Prepare paper.

   Align the edges of paper. If paper is curled, flatten it.

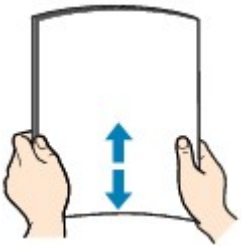

   Note

   - Align the edges of paper neatly before loading. Loading paper without aligning the edges may cause paper jams.
   - If paper is curled, hold the curled corners and gently bend them in the opposite direction until the paper becomes completely flat.

     For details on how to flatten curled paper, see Check3 in Paper Is Smudged / Printed Surface Is Scratched.

2. Pull out the cassette (A) from the printer.

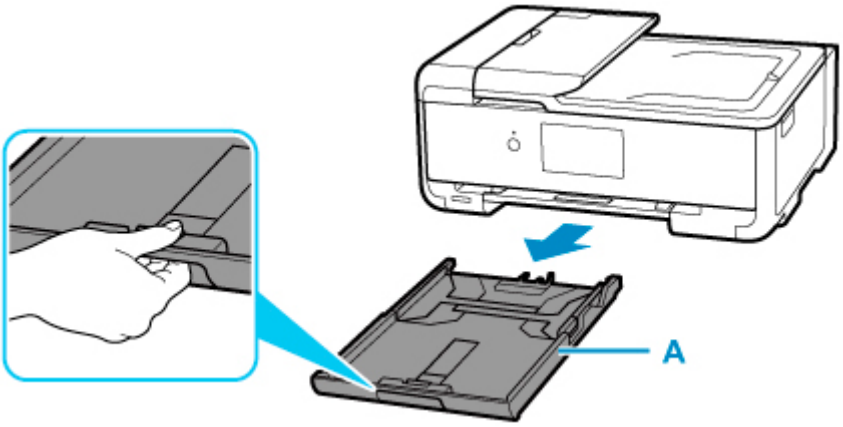

3. Slide paper guides (B) in front and (C) on right to open guides.

4. Load paper stack in portrait orientation WITH PRINT SIDE FACING DOWN, and place it in center of cassette.

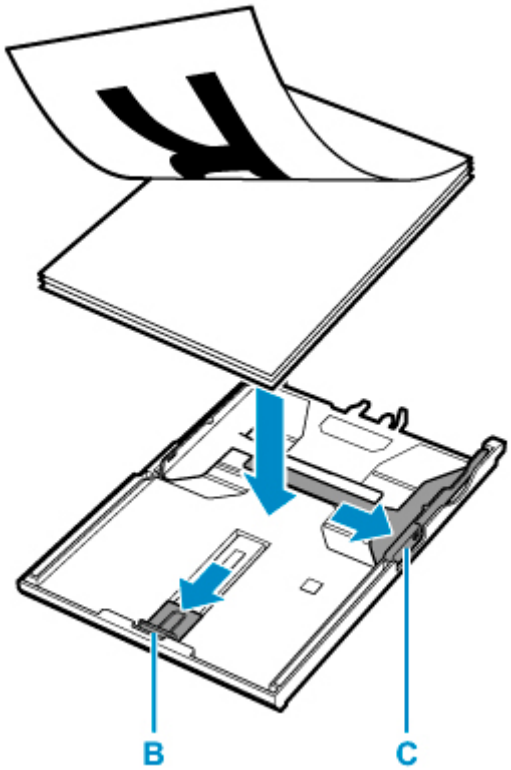

Important

- Always load paper in portrait orientation (D). Loading paper in landscape orientation (E) can cause paper jams.

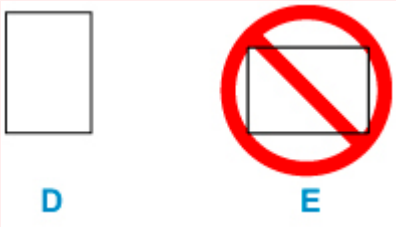

Note

- Align the paper stack with the edge of the cassette as shown in the figure below.

  If the paper stack is in contact with the protrusion (F), the paper may not be fed properly.

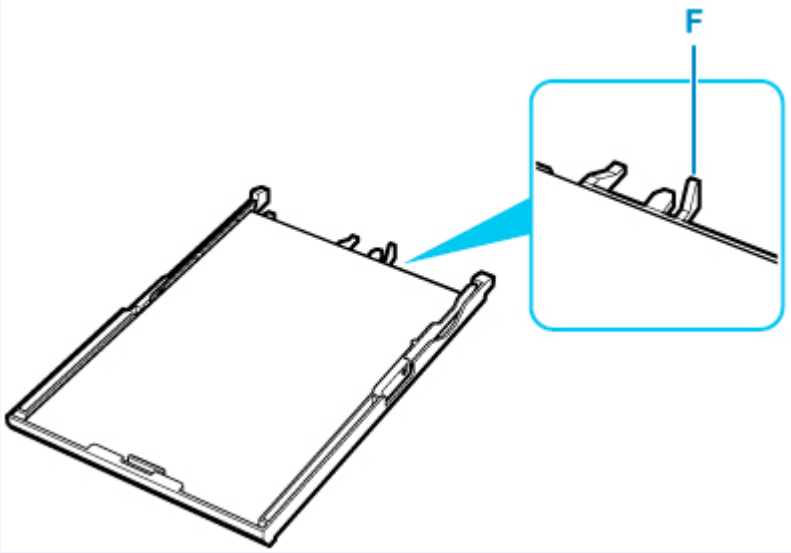

5. Slide front paper guide (B) to align it with paper stack.

   Align paper guide with where it clicks into place.

6. Slide right paper guide (C) to align it with paper stack.

   Do not slide the paper guide too hard against the paper. The paper may not be fed properly.

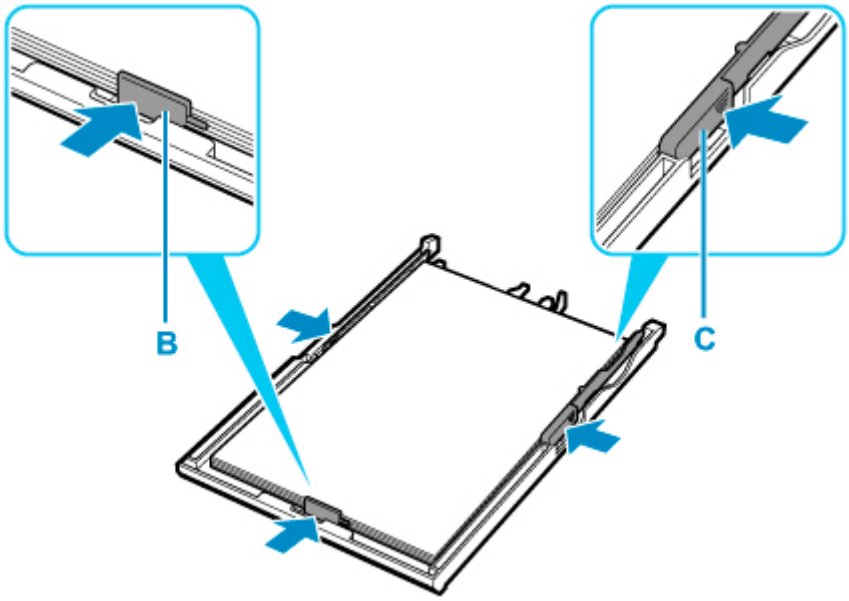

Note

- Do not load sheets of paper higher than the load limit mark (G).
- Keep the paper stack height below the tabs (H) of the paper guides.

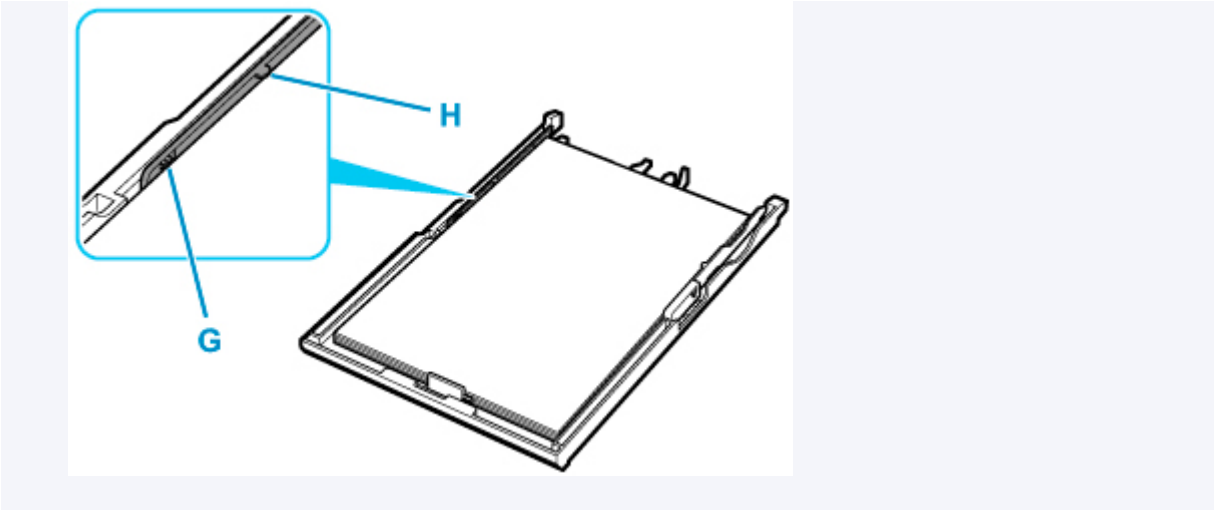

7. Insert cassette into printer.

   Push the cassette into the printer until it stops.

   After inserting the cassette into the printer, the paper setting confirmation screen for the cassette appears on the touch screen.

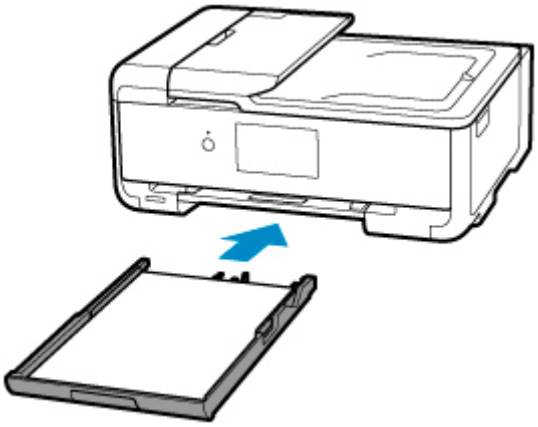

8. If page size on touch screen matches size of paper loaded in cassette, select **Yes**.

   If not, select **Change** to change the setting in accordance with the size of the loaded paper.

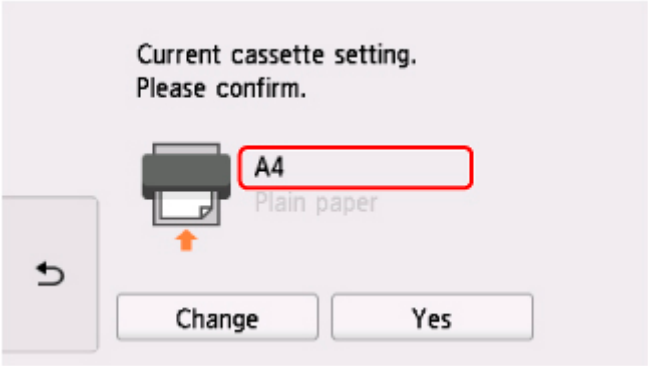

9. Open operation panel (I), and then pull out paper output tray (J) and paper output support (K).

Be sure to open the operation panel before printing. If the operation panel is close, the printer does not start printing.

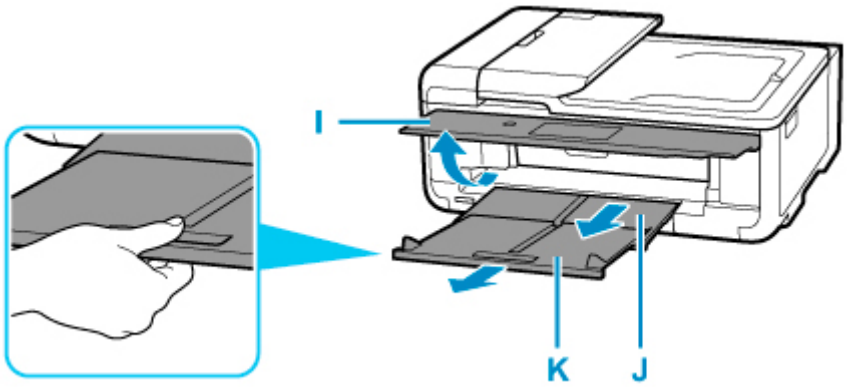

Note

- To prevent incorrect printing, this printer has a function that detects whether the settings for the paper loaded in the cassette matches the paper settings. Before printing, make print settings in accordance with the paper settings. When this function is enabled, an error message is displayed if these settings do not match to prevent incorrect printing. When this error message is displayed, check and correct the paper settings.

Loading Envelopes in Rear Tray

You can load Envelope DL and Envelope Com 10 on the rear tray.

The address is automatically rotated and printed according to the envelope's direction by specifying with the printer driver properly.

Important

- Printing of envelopes from the operation panel or from a PictBridge (Wi-Fi) compliant device is not supported.
- Do not use the following envelopes. They could jam in the printer or cause the printer to malfunction.
  - Envelopes with an embossed or treated surface
  - Envelopes with a double flap
  - Envelopes whose gummed flaps are already moistened and adhesive

1. Prepare envelopes.

- Press down on all four corners and edges of the envelopes to flatten them.

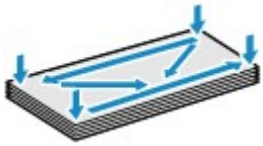

- If the envelopes are curled, hold the opposite corners and gently twist them in the opposite direction.

- If the corner of the envelope flap is folded, flatten it.
- Use a pen to press the leading edge in the inserting direction flat and sharpen the crease.

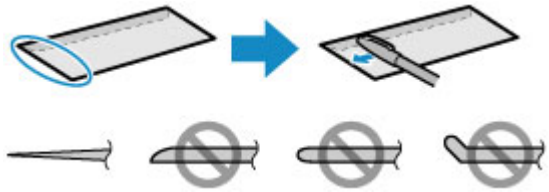

The figures above show a side view of the leading edge of the envelope.

Important

- The envelopes may jam in the printer if they are not flat or the edges are not aligned. Make sure that no curl or puff exceeds 0.12 inch (3 mm).

2. Open rear tray cover (A). Pull straight up and fold back paper support (B).

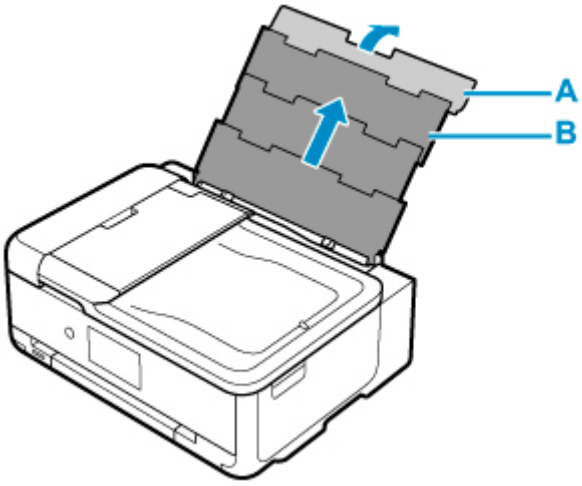

3. Open the feed slot cover (C).

4. Slide right paper guide (D) to open both paper guides.

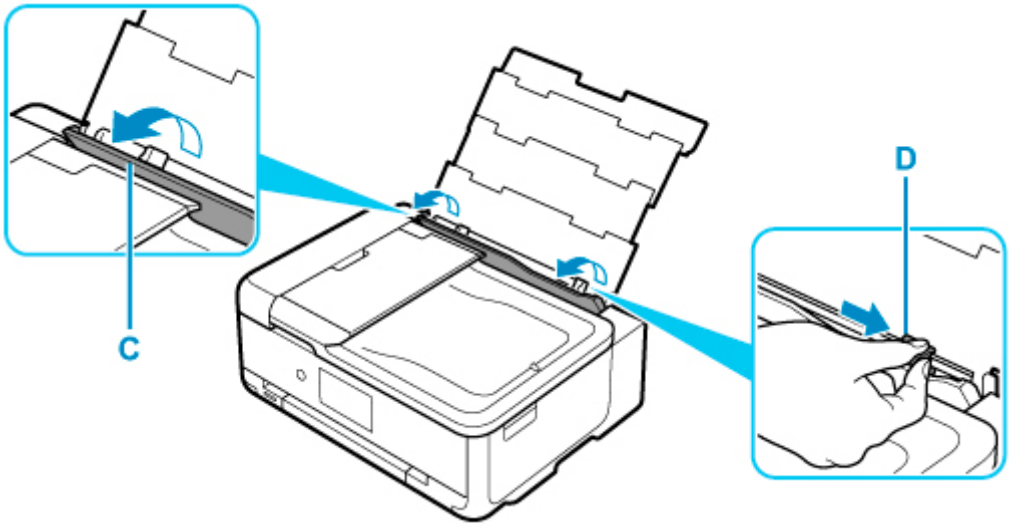

5. Load envelopes in portrait orientation WITH PRINT SIDE FACING UP.

   Up to 10 envelopes can be loaded at once.

   Fold flap of the envelope and load the envelope in portrait orientation with the address side facing up.

6. Slide right paper guide (D) to align with both sides of envelopes.

   Do not slide the paper guides too hard against the envelopes. The envelopes may not be fed properly.

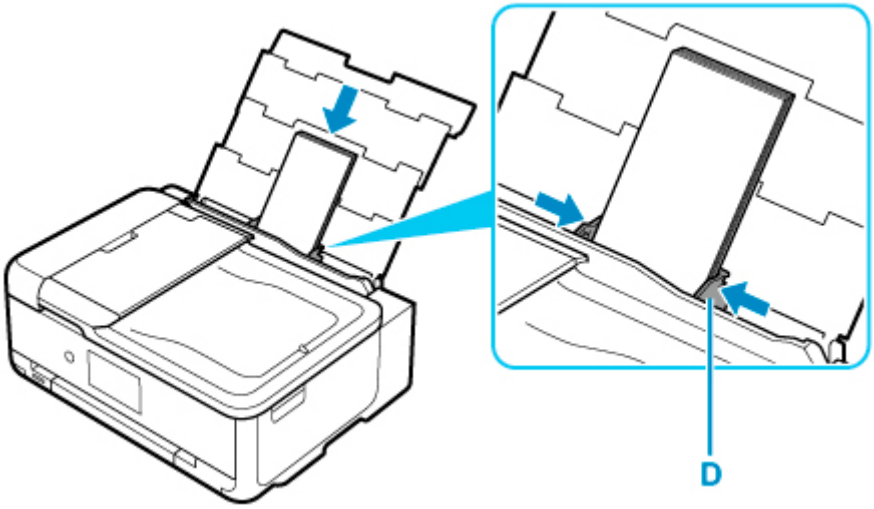

Note

- Do not load envelopes higher than the load limit mark (E).

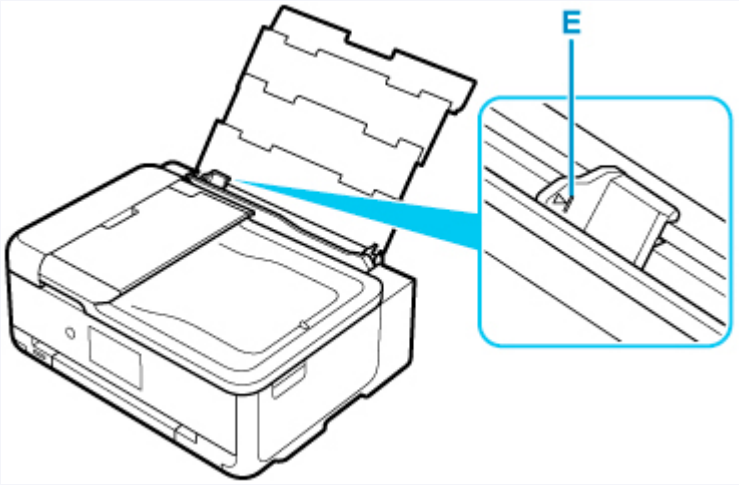

7. Close feed slot cover (C) gently.

Important

- If the feed slot cover is open, paper cannot be fed. Be sure to close the feed slot cover.

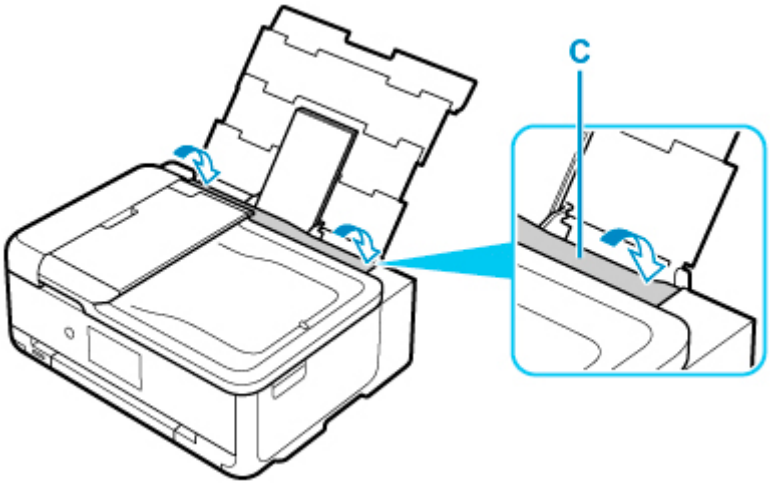

After closing the feed slot cover, the paper setting confirmation screen for the rear tray appears on the touch screen.

8. If page size and media type shown on touch screen match size and type of envelopes loaded in rear tray, select **Yes**.

If not, select **Change** to change the settings in accordance with the size and type of the loaded envelopes.

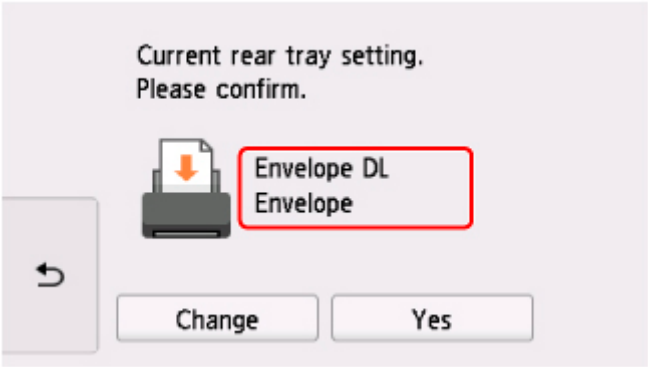

9. Open operation panel (F), and then pull out paper output tray (G) and paper output support (H).

Be sure to open the operation panel before printing. If the operation panel is close, the printer does not start printing.

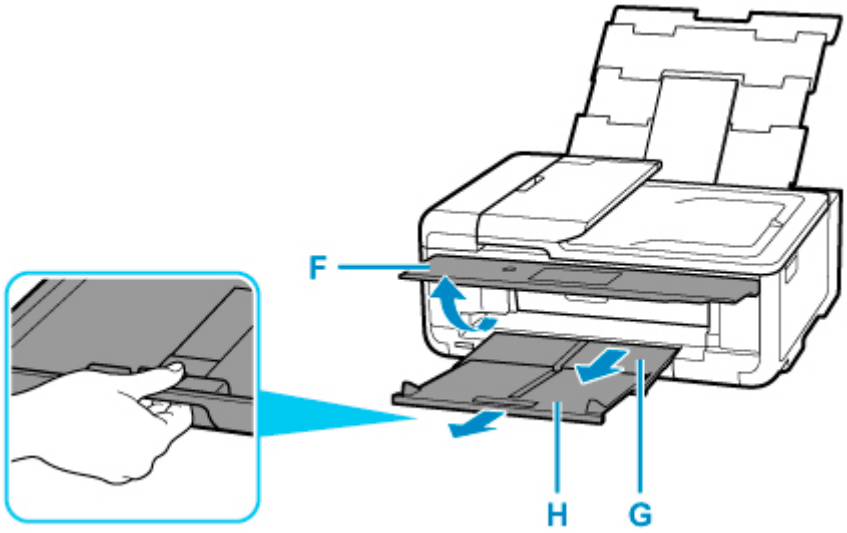

Note

- To prevent incorrect printing, this printer has a function that detects whether the settings for the paper loaded on the rear tray matches the paper settings. Before printing, make print settings in accordance with the paper settings. When this function is enabled, an error message is displayed if these settings do not match to prevent incorrect printing. When this error message is displayed, check and correct the paper settings.

Placing Multi-purpose Tray

- Cautions When Printing with Multi-purpose Tray
- Placing a Printable Disc
- Placing Printable Nail Stickers
- How to Detach / Attach Multi-purpose Tray

Cautions When Printing with Multi-purpose Tray

Cautions Common to using Multi-purpose Tray

- Be sure to use the multi-purpose tray supplied with this printer.
- Do not mount the multi-purpose tray while the printer is in operation.
- Do not remove the multi-purpose tray while the printer is in operation. Doing so may damage the printer, the multi-purpose tray, or the media.
- Do not get dirt on the multi-purpose tray or scratches on the reflectors. The printer may not be able to recognize that a media is loaded, or printing may become misaligned. If the multi-purpose tray becomes dirty, wipe the reflector clean with a soft and dry cloth, taking care not to scratch it.
- After printing, allow the printing surface of the media to dry naturally. Do not use hairdryers or expose the media to direct sunlight to dry the ink. Do not touch the printing surface until the ink has dried.

Cautions When Printing onto Printable Disc

- Remove any dirt from the multi-purpose tray before placing printable discs on it. Loading discs on a dirty multi-purpose tray may scratch the recording surface of the discs.
- Do not print onto printable discs that are not compatible with inkjet printing. The ink will not dry and may cause problems with the disc itself or DVD players or other devices it is loaded into.
- Do not print onto a printable disc's recording surface. Doing so will make data recorded onto discs unreadable.
- Hold printable discs by their edges. Do not touch either the label surface (printing surface) or recording surface.
- The multi-purpose tray may become dirty if software other than Easy-PhotoPrint Editor is used.

Cautions When Printing on Printable Nail Stickers

- For precautions on Printable Nail Stickers, refer to the instructions supplied with the Printable Nail Stickers.
- The multi-purpose tray may become dirty if an application other than Nail Stickers Creator is used.

Placing a Printable Disc

- Before Placing a Printable Disc
- Placing a Printable Disc
- Removing a Printable Disc

Before Placing a Printable Disc

A printable disc differs from regular disc (BD/DVD/CD, etc.) in that its label surface has been specially processed or printing by an inkjet printer.

The following items are needed to print onto the printable disc.

- Multi-purpose tray (supplied with the printer)

  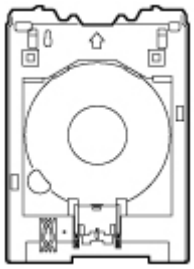

  The multi-purpose tray is stored in the back of the cassette.

- 4.72 inches (12 cm) printable disc

  Obtain a printable disc with a label surface compatible with inkjet printing.

Placing a Printable Disc

To print onto a printable disc, place it on the supplied multi-purpose tray, and then insert it into the printer.

This procedure also applies to printing from a computer.

Important

- Do not mount the multi-purpose tray until the message prompting you to load the printable disc appears. Doing so can damage the printer.

Note

- If test printing is executed onto test printing paper, depending on the paper type, the printer may not be able to read its size correctly, preventing the border areas from being printed. Test printing paper should be used for purposes of checking the envisioned layout.

1. When message prompting you to load printable disc appears, detach multi-purpose tray from back of cassette.

   Insert the removed cassette back into the printer.

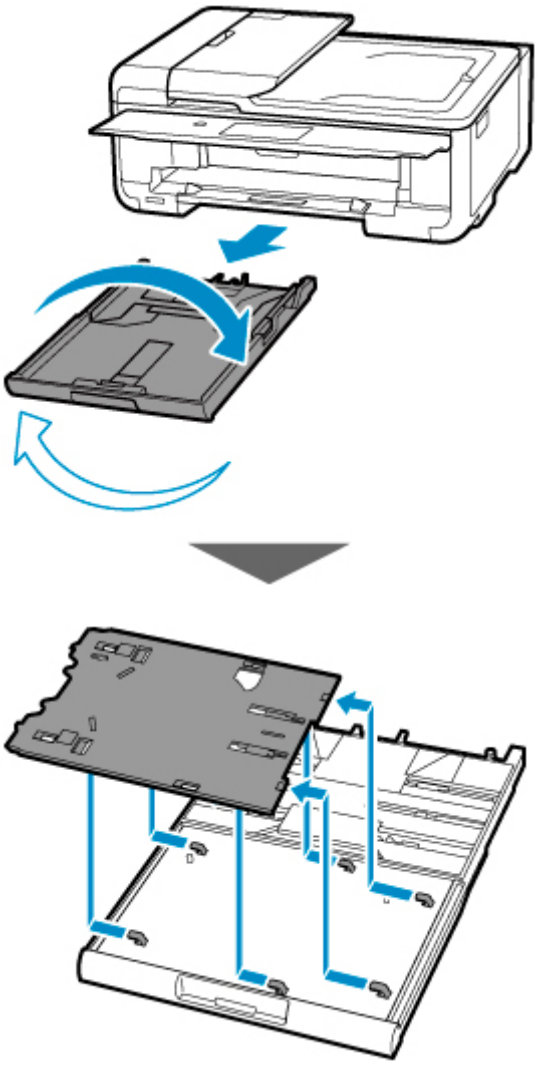

Note

- After inserting the cassette into the printer, if a message appears on the screen, select **Yes**.

2. Open multi-purpose tray guide (A) and completely press it down.

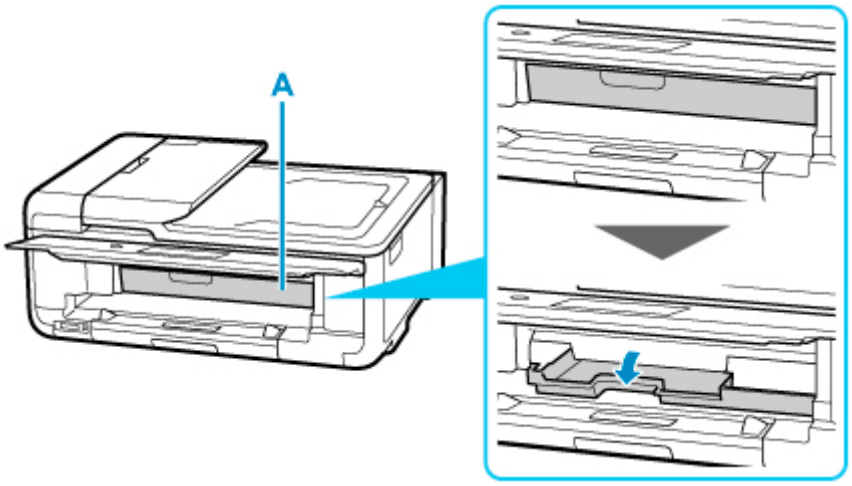

3. Place printable disc on multi-purpose tray.

Important

- Check that there is no dirt on the multi-purpose tray before placing a printable disc on it.
- When placing a printable disc on the multi-purpose tray, do not touch the printing surface of the disc or the reflectors (B) on the multi-purpose tray.

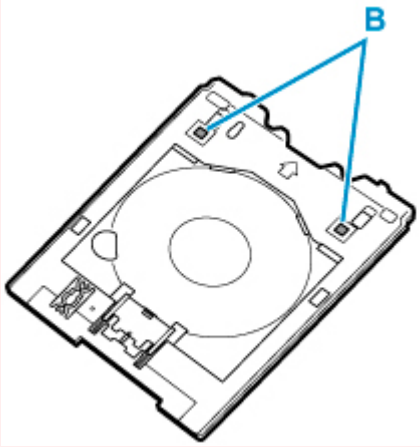

1. WITH PRINT SIDE FACING UP, place printable disc, and press it against lock (C) at bottom.

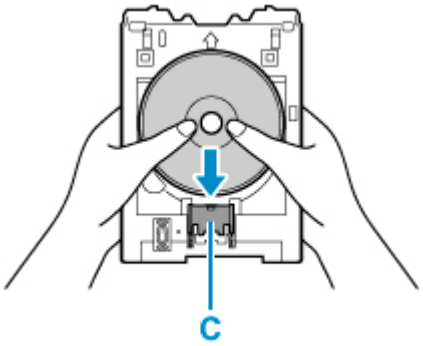

2. While pressing down lock with printable disc, insert top of printable disc into slits (D).

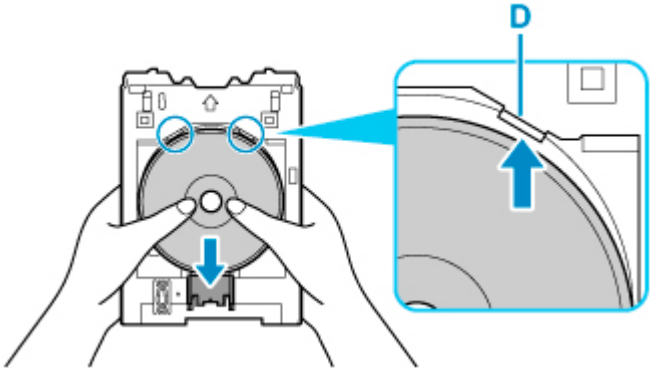

4. Place multi-purpose tray on multi-purpose tray guide.

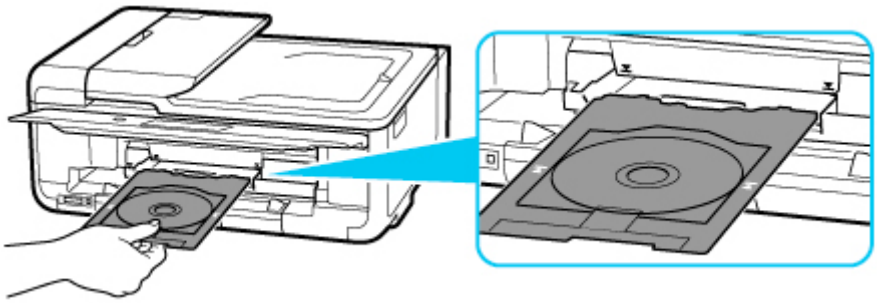

5. Insert multi-purpose tray straight in in horizontal direction until arrow (▼) on multi-purpose tray guide is approximately aligned with arrow (▲) on multi-purpose tray.

Important

- Do not insert the multi-purpose tray beyond the arrow (▼) on the multi-purpose tray guide.

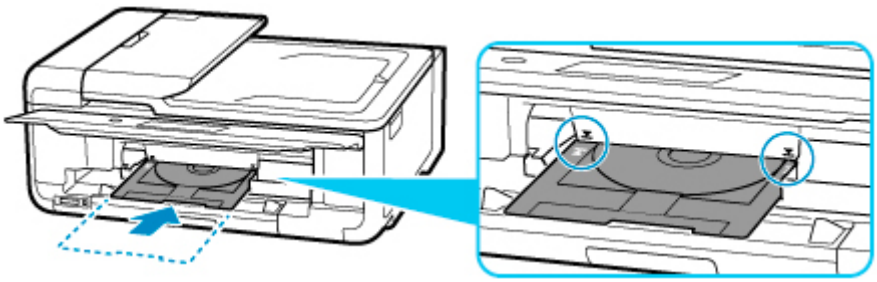

Note

- The multi-purpose tray may be ejected after a certain amount of time passes. In such a case, follow the on-screen instructions to place the multi-purpose tray again.

Removing a Printable Disc

1. Pull out multi-purpose tray.

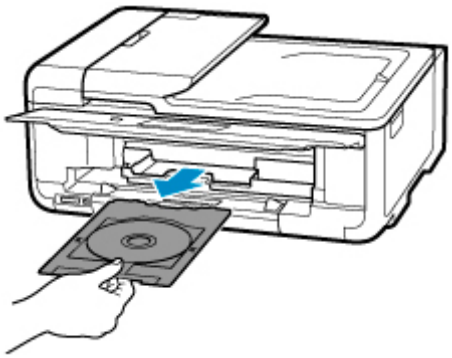

2. While pressing down lock (A), take out printable disc from slits (B) on multi-purpose tray, and remove it.

Important

- Do not touch the printing surface when removing the disc from the multi-purpose tray.

Note

- Allow the printing surface to dry before removing the disc. If you see printing on the multi-purpose tray or on the transparent parts of the inner or outer diameters of the printable disc, wipe them clean after the printing surface has dried.

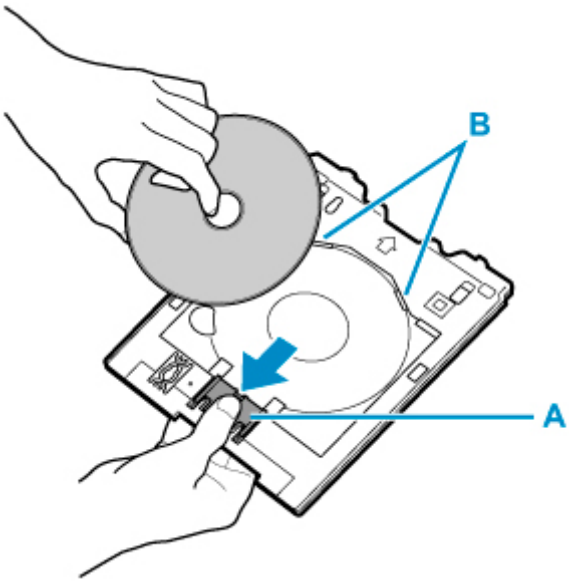

3. Close multi-purpose tray guide.

Important

- When the multi-purpose tray guide is open, you cannot print onto regular printing paper. Be sure to close the multi-purpose tray guide.

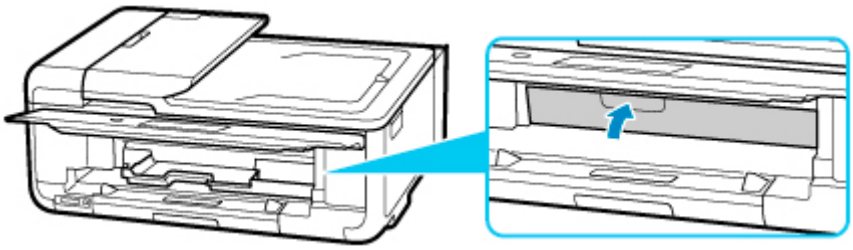

4. Store multi-purpose tray under cassette.

How to Detach / Attach Multi-purpose Tray

Placing Printable Nail Stickers

- Before Placing Printable Nail Stickers
- Placing Printable Nail Stickers
- Removing Printable Nail Stickers

Before Placing Printable Nail Stickers

The following items are needed to print onto Printable Nail Stickers.

- Multi-purpose tray (supplied with the printer)

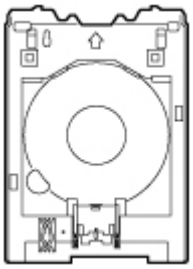

The multi-purpose tray is stored in the back of the cassette.

- Printable Nail Stickers (NL-101)

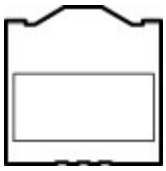

Note

- For the latest information on Printable Nail Stickers, access our website.

Placing Printable Nail Stickers

To print onto Printable Nail Stickers, place them on the multi-purpose tray supplied with the printer, and then insert them into the printer.

Important

- Do not mount the multi-purpose tray until the message prompting you to load Printable Nail Stickers appears. Doing so can damage the printer.

1. When message prompting you to load Printable Nail Stickers appears, detach multi-purpose tray from back of cassette.

   Insert the removed cassette back into the printer.

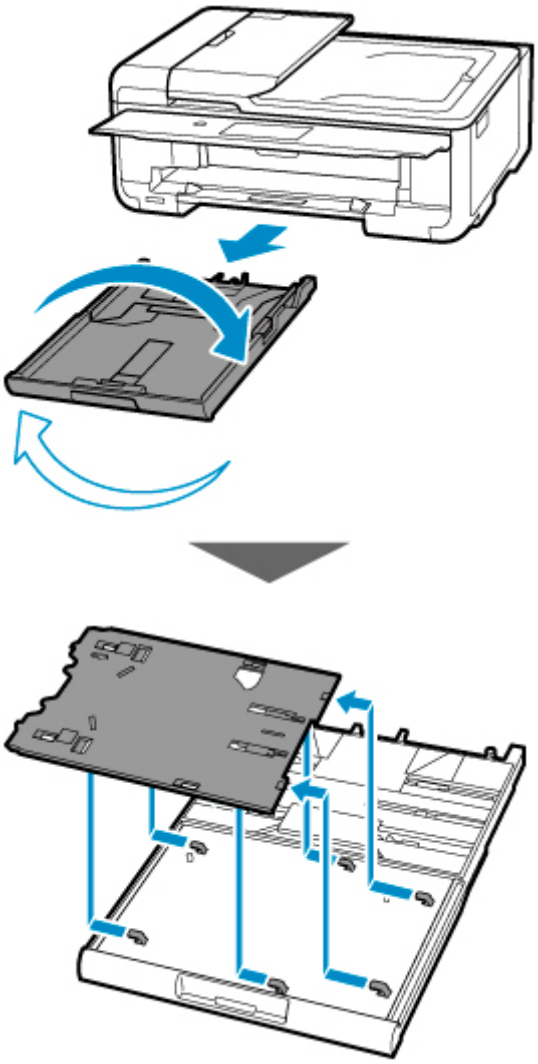

Note

- After inserting the cassette into the printer, if a message appears on the screen, select **Yes**.

2. Open multi-purpose tray guide (A) and completely press it down.

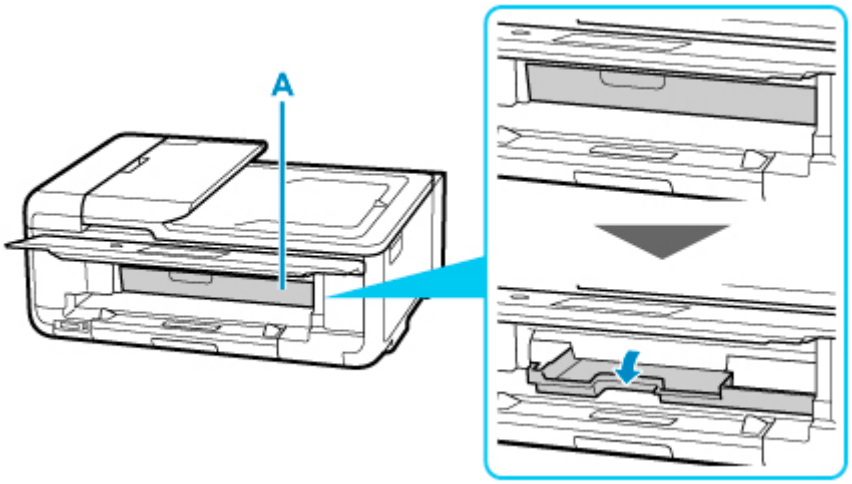

3. Place Printable Nail Stickers on multi-purpose tray.

Important

- Check that there is no dirt on the multi-purpose tray before placing a printable disc on it.
- To prevent getting dirt or fingerprints on Printable Nail Stickers, hold the stickers by their edges. If the print side gets any dirt or is damaged, it may cause poor print quality.
- When placing Printable Nail Stickers on the multi-purpose tray, do not touch the reflectors (B) on the multi-purpose tray.

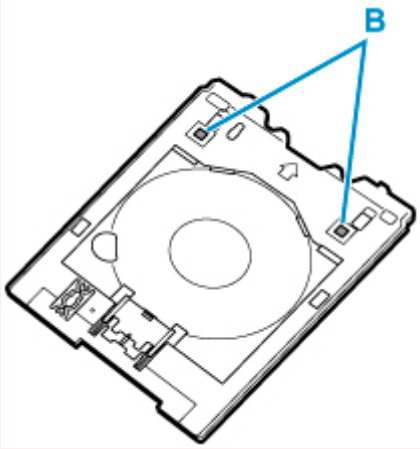

1. WITH PRINT SIDE FACING UP, place Printable Nail Stickers and press it against lock (C) at bottom.

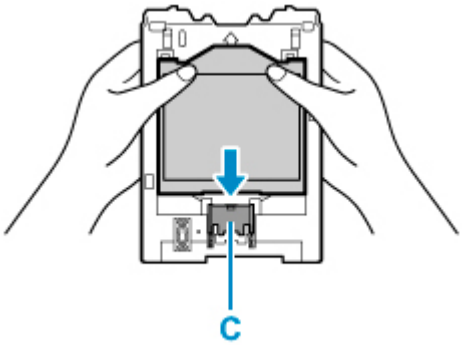

2. While pressing down lock with Printable Nail Stickers, insert two tabs (D) on top into slits (E) on multi-purpose tray.

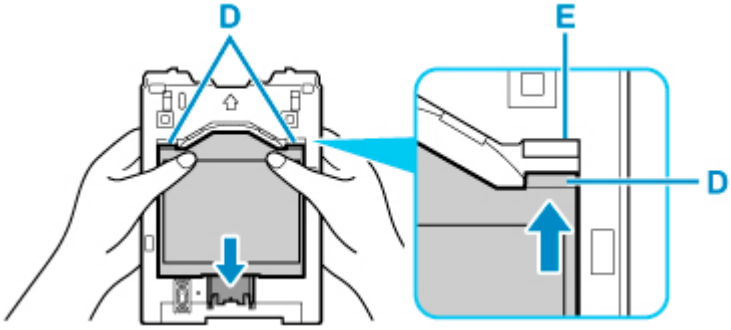

4. Place multi-purpose tray on multi-purpose tray guide.

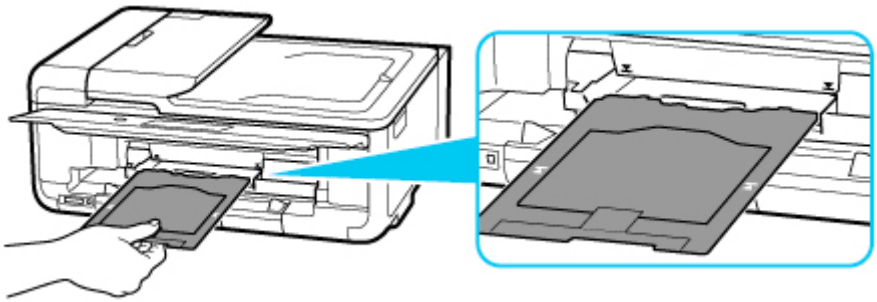

5. Insert multi-purpose tray straight in in horizontal direction until arrow (▼) on multi-purpose tray guide is approximately aligned with arrow (▲) on multi-purpose tray.

Important

- Do not insert the multi-purpose tray beyond the arrow (▼) on the multi-purpose tray guide.

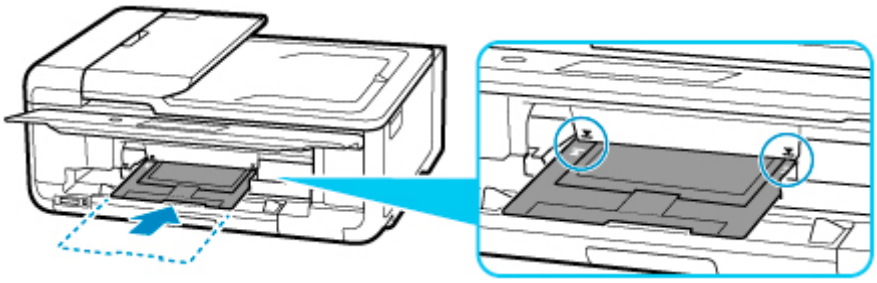

Note

- The multi-purpose tray may be ejected after a certain amount of time passes. In such a case, follow the on-screen instructions to place the multi-purpose tray again.

Removing Printable Nail Stickers

1. Pull out multi-purpose tray.

2. Remove Printable Nail Stickers.

While pressing down lock (A), remove two tabs (B) on the top out of slits (C).

Important

- Do not touch the printing surface when removing Printable Nail Stickers.

Note

- Allow the printing surface to dry before removing Printable Nail Stickers. If you see printing on the multi-purpose tray or outside the Printable Nail Stickers, wipe them clean after the printing surface has dried.

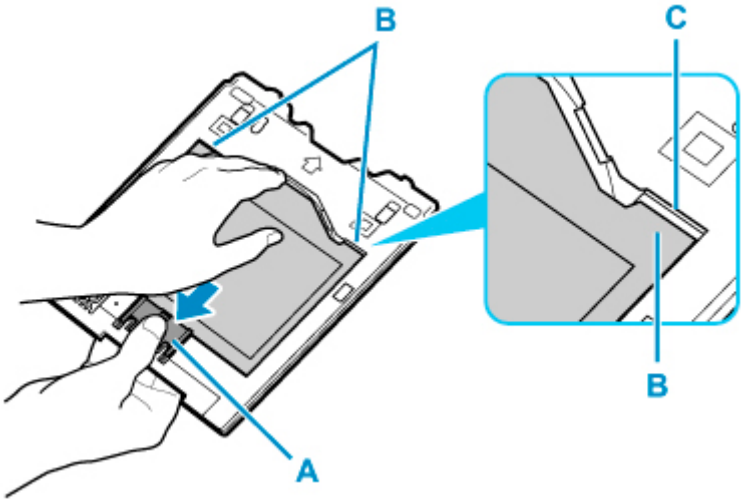

3. Peel a sheet of Printable Nail Stickers from adapter.

Important

- Allow the printing surface to dry before tearing off Printable Nail Stickers from its edges.

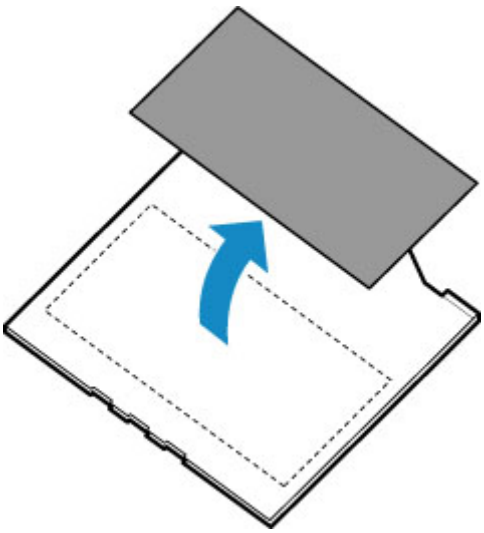

4. Close multi-purpose tray guide.

Important

- When the multi-purpose tray guide is open, the normal printing cannot be executable. Be sure to close the multi-purpose tray guide.

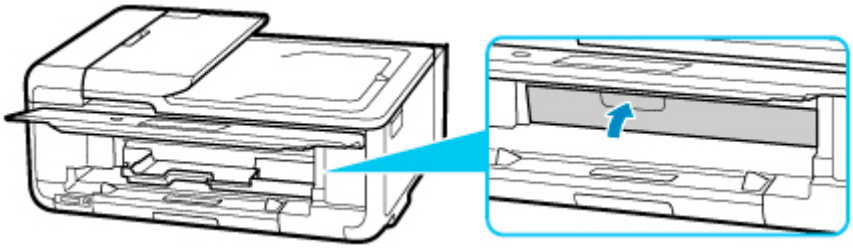

5. Store multi-purpose tray under cassette.

How to Detach / Attach Multi-purpose Tray

How to Detach / Attach Multi-purpose Tray

Detaching Multi-purpose Tray

1. Take cassette out of printer.

   Be sure to remove any paper.

2. Turn cassette over and remove multi-purpose tray.

   Slide the multi-purpose tray, take it out of the six tabs (A), and then lift it.

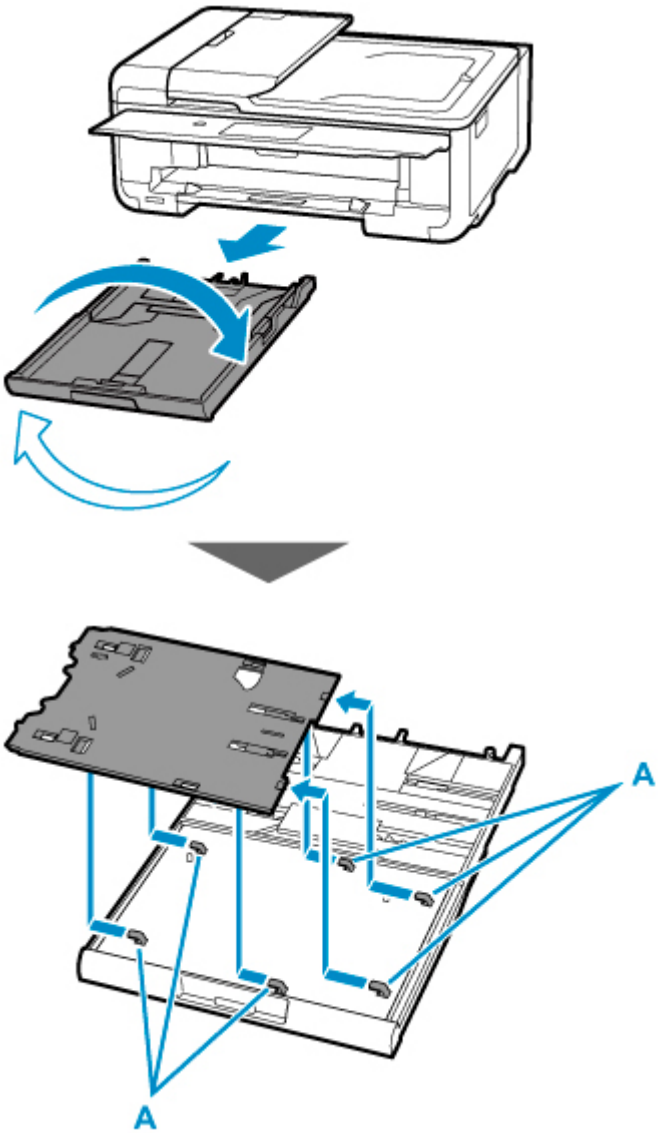

Important

- Be sure to remove any orange shipping tape on the multi-purpose tray.

Attaching Multi-purpose Tray

1. Take cassette out of printer.

   Be sure to remove any paper.

2. Turn cassette over and attach multi-purpose tray to it.

   Turn the multi-purpose tray so that its underside faces up, align it with the six tabs (A) in the orientation shown in the figure below, and then slide to attach.

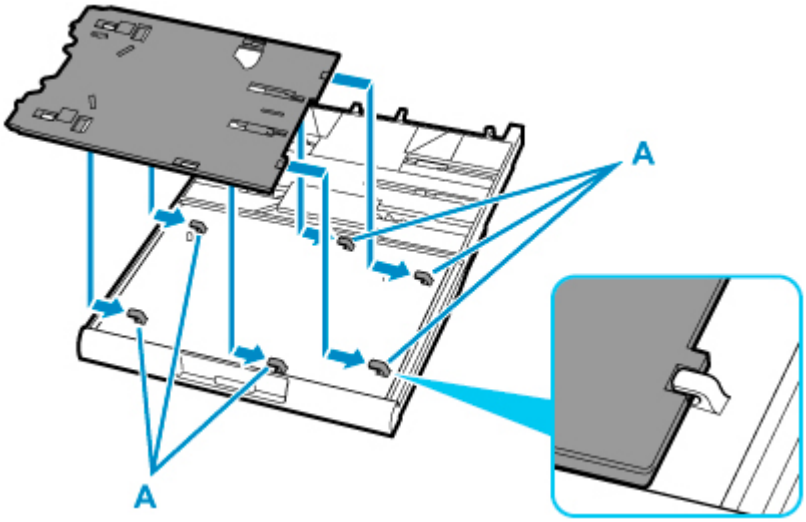

Important

- Insert the multi-purpose tray, making sure that its holes are aligned with the tabs on the back of the cassette. If the multi-purpose tray is not properly attached, it may be damaged when the cassette is inserted into the printer.

Loading Originals

- Where to Load Originals
- Loading Originals on Platen
- Loading Documents in the ADF (Auto Document Feeder)
- Loading Based on Use
- Supported Originals

Where to Load Originals

The printer has two positions to load originals: platen and ADF (Auto Document Feeder).

Select the position to load the original according to the size, type, or usage.

Note

- For details on the supported originals, see below.

  Supported Originals

Loading Documents, Photos, or Book on Platen

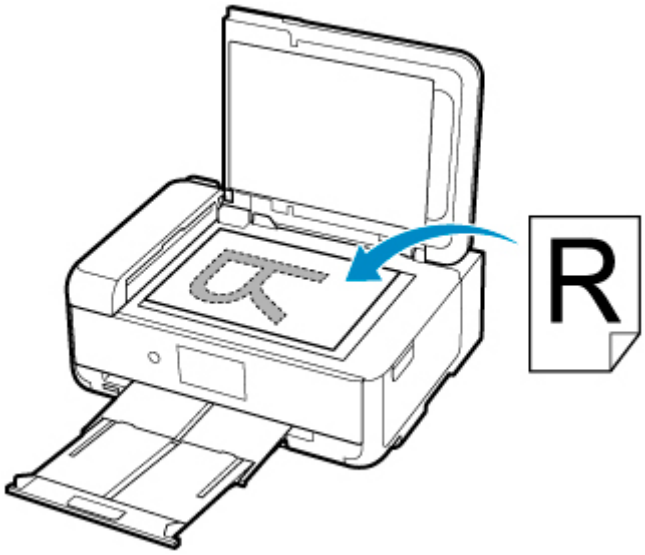

Loading Two or More Sheets of Document of the Same Size and Thickness in the ADF

You can also load a sheet of document in the ADF.

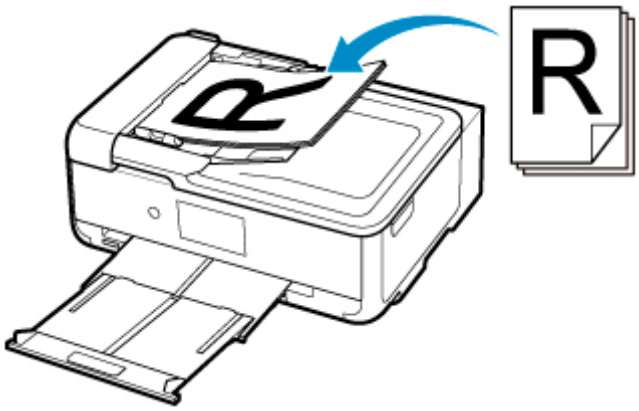

Note

- To scan the original at optimum quality, load it on the platen.

Loading Originals on Platen

1. Open the document cover.

2. Load original WITH SIDE TO SCAN FACING DOWN on platen.

   - Loading Based on Use
   - Supported Originals

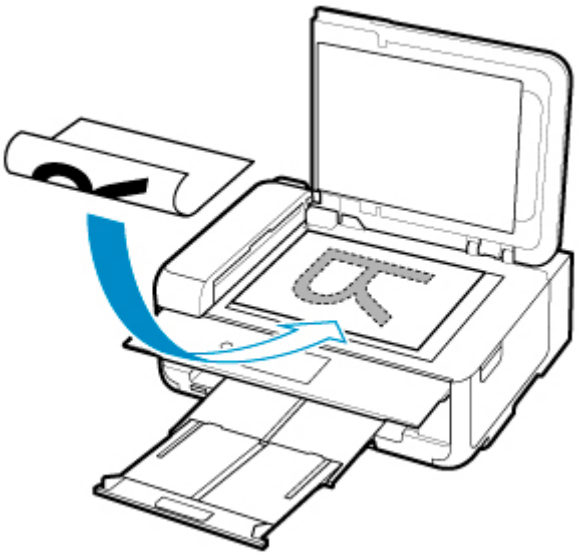

Important

- Be sure to observe the following when loading the original on the platen.

  Failure to observe the following may cause the scanner to malfunction or the platen glass to break.

  - Do not place any objects weighing 4.4 lb (2.0 kg) or more on the platen glass.
  - Do not put any pressure of 4.4 lb (2.0 kg) or more on the platen glass, such as pressing down the original.

3. Close the document cover gently.

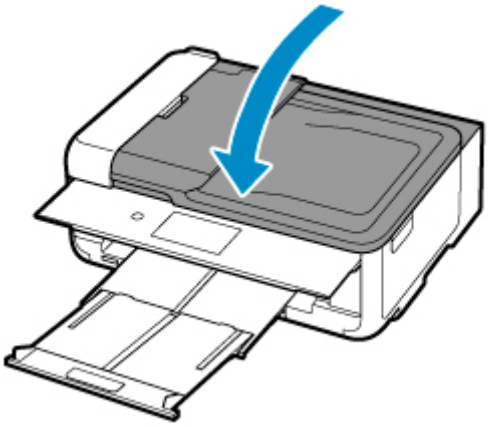

Important

- After loading the original on the platen, be sure to close the document cover before starting to copy or scan.

Loading Documents in the ADF (Auto Document Feeder)

Note

- To scan a document at optimum quality, load it on the platen.

1. Make sure any original has been removed from platen.

2. Open document tray (A).

3. Slide the paper guides (B) all the way out.

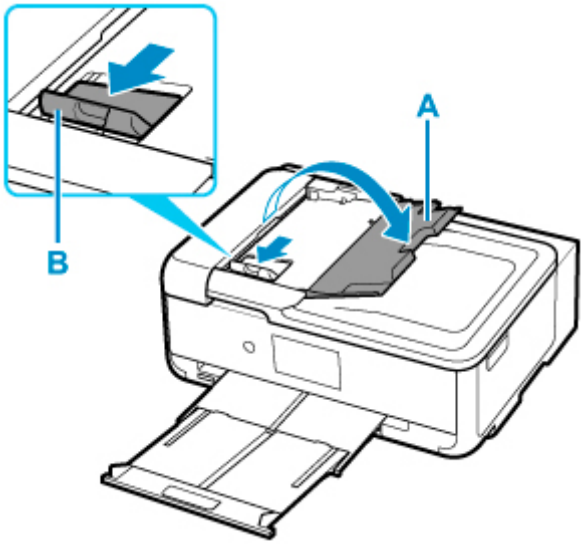

4. Load document WITH SIDE TO SCAN FACING UP in document tray.

   Insert the document until it stops.

   Note

   - For details on the supported originals, see below.

     Supported Originals

5. Adjust document guide (B) to match width of document.

   Do not slide the document guide too hard against the document. The document may not be fed properly.

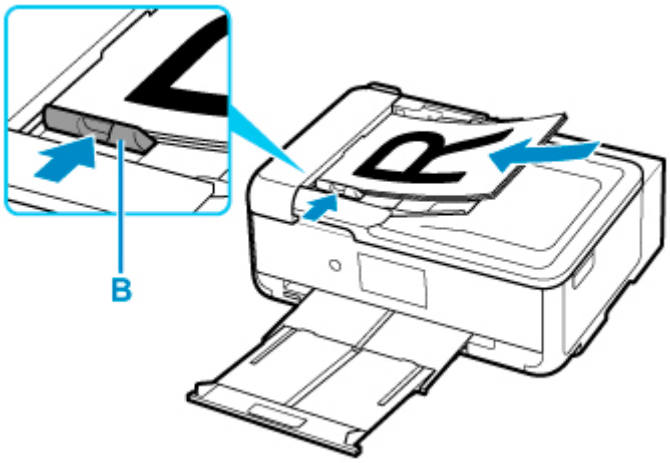
B

Loading Based on Use

Load the original in the correct position according to the function to use. If you do not load the original correctly, it may not be scanned properly.

Originals	Function	How to Load
Magazines, Newspapers, and Documents	**Copying**	Loading the Original to Be Aligned with the alignment mark
	Scanning by detecting the type and size of the original automatically If you scan using the operation panel, select **Auto scan** for **Doc.type** in **Scan**.	
	Scanning by specifying a standard size (A4, Letter, etc.) If you scan using the operation panel, select **Document** or **Photo** for **Doc.type** in **Scan** and specify a standard size (A4, Letter, etc.) for **Scan size** to scan originals.	
Photos, Postcards, Business Cards, and Disc (BD/DVD/CD)	**Scanning only one original** If you scan using the operation panel, follow the operation below. • Select **Auto scan** for **Doc.type** in **Scan**. • Select **Photo** for **Doc.type** in **Scan** and specify **Auto scan** for **Scan size** to scan originals.	Loading Only One Original in Center of Platen
	Scanning two or more originals If you scan using the operation panel, follow the operation below. • Select **Auto scan** for **Doc.type** in **Scan**. • Select **Photo** for **Doc.type** in **Scan** and specify **Auto multi scan** for **Scan size** to scan two or more originals.	Loading Two or More Originals on Platen

Note

- For details on how to scan from the computer and how to load originals, see below.
  - For Windows:
    - Scanning from Computer (Windows)
  - For macOS:
    - Scanning from Computer (macOS)

Loading the Original to Be Aligned with the alignment mark

Place the original WITH THE SIDE TO SCAN FACING DOWN on the platen and align it with the alignment mark . Portions placed on the diagonally striped area cannot be scanned.

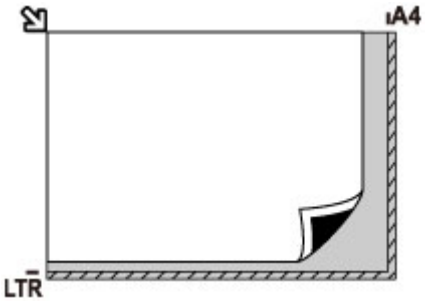

Important

- The printer cannot scan the striped area (A) (0.04 inch (1 mm) from the edges of the platen glass).

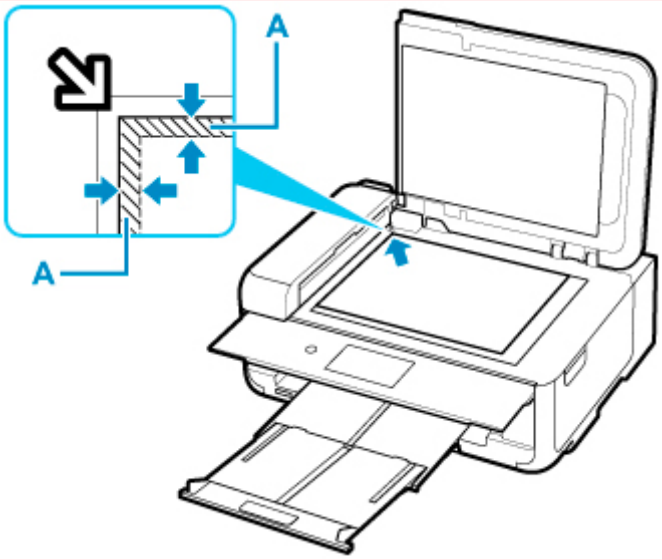

Loading Only One Original in Center of Platen

Place the original WITH THE SIDE TO SCAN FACING DOWN, with 0.40 inch (1 cm) or more space between the edges (diagonally striped area) of the platen. Portions placed on the diagonally striped area cannot be scanned.

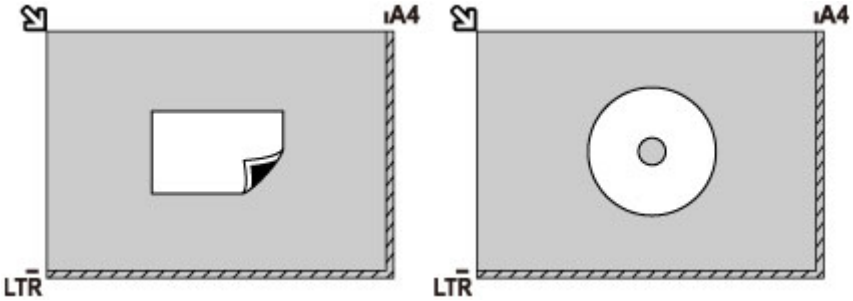

Loading Two or More Originals on Platen

Place the originals WITH THE SIDE TO SCAN FACING DOWN. Allow 0.40 inch (1 cm) or more space between the edges (diagonally striped area) of the platen and the originals, and between the originals. Portions placed on the diagonally striped area cannot be scanned.

You can place up to 12 items.

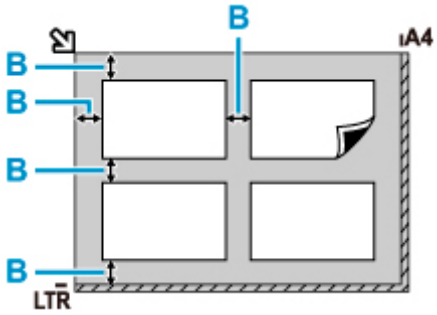

B: More than 0.40 inch (1 cm)

Note

- The Skew Correction function automatically compensates for the originals placed at an angle of up to approximately 10 degrees. Slanted photos with a long edge of 7.1 inches (180 mm) or more cannot be corrected.
- Non-rectangular or irregular shaped photos (such as cut out photos) may not be scanned properly.

Supported Originals

Platen

Item	Details
Types of originals	• Text document, magazine, or newspaper • Printed photo, postcard, business card, or disc (BD/DVD/CD, etc.) • Documents that are not suitable for the ADF
Size (width x height)	Max. 8.5 x 11.7 inches (216 x 297 mm)
Quantity	One or more sheets*
Thickness	Max. 0.2 inch (5 mm)

* Two or more originals can be loaded on the platen depending on the selected function.

Loading Based on Use

In the ADF (Auto Document Feeder)

Item	Details
Kind of original	Plain-paper documents with multiple pages of the same size, thickness, and weight
Size	A4, Letter, Legal Duplex copying, 2-on-1/4-on-1 copying, or booklet layout copying: A4/Letter only
Quantity	• A4/Letter: Max. 20 sheets (20 lb. (75 g /m^2) paper), up to 0.08 inch (2 mm) high • Legal: Max. 5 sheets (20 lb. (75 g /m^2) paper), up to 0.02 inch (0.5 mm) high
Thickness	0.003 to 0.005 inch (0.07 to 0.13 mm)
Weight	16.0 to 25.3 lb. (60 to 95 g /m^2)

Note

- Make sure any liquids on documents, such as glue, ink, or correction fluid are dry before loading.

  Do not load glued documents in the ADF, even if the glue is dry, because this may cause paper jams.
- Remove all staples, paper clips, or other fasteners before feeding documents.
- Load Legal-sized documents in the ADF.
- Do not load these kinds of documents in the ADF, which may cause paper jams.
  - Wrinkled or creased documents
  - Curled documents
  - Torn documents
  - Documents with holes
  - Glued documents
  - Documents with sticky notes

- Documents on carbon paper
- Documents on coated paper
- Documents on onion skin or other thin paper
- Photos or excessively thick documents

Inserting the Memory Card

- Before Inserting the Memory Card
- Inserting the Memory Card
- Removing the Memory Card

Before Inserting the Memory Card

The following types of memory cards and image data are compatible with the printer.

Important

- If you took and saved photos on a type of memory card that does not guarantee the operation on your PictBridge (Wi-Fi) compliant device, the image data may be unreadable on the printer or damaged. For information on memory cards that your PictBridge (Wi-Fi) compliant device guarantees operation, refer to the instruction manual supplied with your PictBridge (Wi-Fi) compliant device.
- Format the memory card using a digital camera compliant with the Design rule for Camera File system (Exif 2.2/2.21/2.3 compliant), TIFF (Exif 2.2/2.21/2.3 compliant). The memory card may not be compatible with the printer if it is formatted on a computer.

Memory Cards that Do Not Require a Card Adapter

- SD Secure Digital memory card, SDHC memory card, SDXC memory card

Memory Cards that Require a Card Adapter

Be sure to attach the special card adapters to the following memory cards before inserting into the card slot.

- miniSD Card, miniSDHC Card

  Use the special "SD Card Adapter".

- microSD Card, microSDHC Card, microSDXC Card

  Use the special "SD Card Adapter".

Important

- If one of the following memory cards is inserted without the card adapter, you may not be able to remove the memory card.

  - Cannot Remove Memory Card

Printable Image Data

- This printer accepts images taken with a camera compliant with the Design rule for Camera File system (Exif 2.2/2.21/2.3 compliant), TIFF (Exif 2.2/2.21/2.3 compliant). Other image or movie types such as RAW images cannot be printed.
- The printer accepts images scanned and saved with the printer when **Doc.type** is set to **Photo** and **Format** is set to **JPEG** (file extension ".jpg").

Note

- This device incorporates exFAT technology licensed from Microsoft.

Inserting the Memory Card

Important

- When a memory card is inserted into the card slot, the **Access** lamp is lit. When the **Access** lamp is flashing, the printer is accessing the memory card. In this case, do not touch the area around the card slot.

Note

- When **Read/write attribute** is set to **Writable from USB PC**, you cannot print image data from the memory card using the operation panel of the printer. After using the card slot as the memory card drive of a computer, remove the memory card, select **Other device settings** in **Device settings**, then set **Read/write attribute** to **Not writable from PC**.

  Setting Up Card Slot as Memory Card Drive of Computer

- When you use a computer to edit or enhance photos saved on a memory card, be sure to print them from the computer. If you use the operation panel, the photos may not be printed properly.

1. Prepare your memory card.

Attach a special card adapter if your memory card requires one.

Before Inserting the Memory Card

2. Insert the memory card into the card slot.

Insert your memory card straightforward WITH THE LABELED SIDE FACING UP into the card slot.

When the memory card is inserted properly, the **Access** lamp (A) will light up.

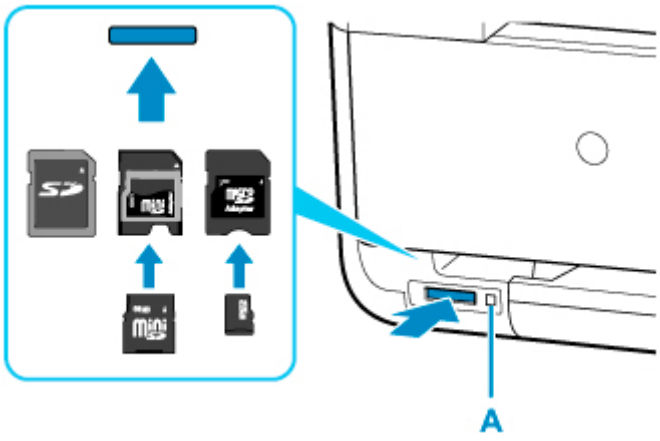

* Be sure to attach the card adapter to the following types of memory card before inserting to the card slot.

- miniSD Card, miniSDHC Card
- microSD Card, microSDHC Card, microSDXC Card

Important

- Part of the memory card will protrude from the card slot, but do not force it into the slot any further. This can damage the printer or the memory card.
- Make sure that the memory card is correctly oriented before inserting it into the card slot. If you force the memory card into the card slot in the wrong orientation, the memory card or the printer can be damaged.

Removing the Memory Card

Important

- If you used the card slot as the memory card drive of a computer, you must perform the "safe removal" operation on your computer before physically removing the memory card from the printer.

  Setting Up Card Slot as Memory Card Drive of Computer

1. Make sure that the **Access** lamp is lit, and remove the memory card.

   Hold the part of the memory card that is protruding and remove it straightforward from the printer.

   ### Important

   - Do not remove the memory card while the **Access** lamp is flashing. The **Access** lamp flashes while the printer is reading or writing data from/to the memory card. If you remove the memory card or turn off the power while the **Access** lamp is flashing, the data saved on the memory card can be damaged.

Replacing Ink Tanks

- Replacing Ink Tanks
- Checking Ink Status on the Touch Screen
- Ink Tips

Replacing Ink Tanks

When remaining ink cautions or errors occur, the message will appear on the touch screen to inform you of the error. In this state, the printer cannot print or scan. Take appropriate action according to the message.

An Error Occurs

Note

- If print results become faint or white streaks appear despite sufficient ink levels, see Maintenance Procedure.
- For precautionary notes on handling ink tanks, see Notes on ink tanks.

Replacing Procedure

When you need to replace an ink tank, follow the procedure below.

1. Check that printer is turned on.

2. Open the scanning unit / cover.

   The print head holder moves to the replacement position.

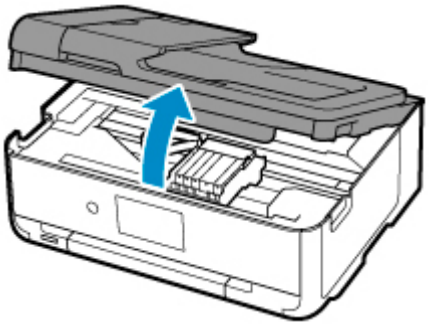

Caution

- Do not hold the print head holder to stop or move it forcibly. Do not touch the print head holder until it stops completely.

Important

- Do not touch the metallic parts or other parts inside the printer.
- If the scanning unit / cover is left open for more than 10 minutes, the print head holder moves to the right. In this case, close and reopen the scanning unit / cover.

3. Remove the ink tank where the ink runs out.

   Push the tab (A) and lift the ink tank to remove.

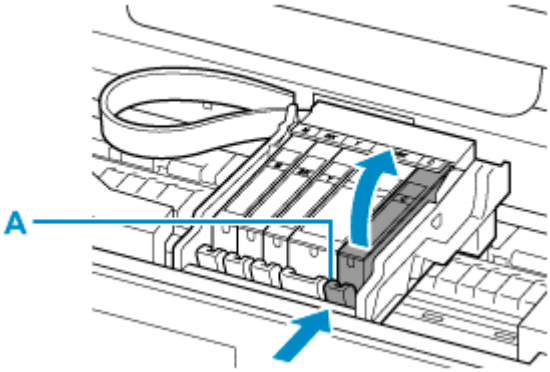

Important

- Do not touch other parts besides the ink tanks.
- Handle the ink tank carefully to avoid staining of clothing or the surrounding area.
- Discard the empty ink tank according to the local laws and regulations regarding disposal of consumables.

Note

- Do not remove two or more ink tanks at the same time. Be sure to replace ink tanks one by one when replacing two or more ink tanks.

4. Take a new ink tank out of its package, remove the orange tape (B) completely, then remove the protective film (C) completely.

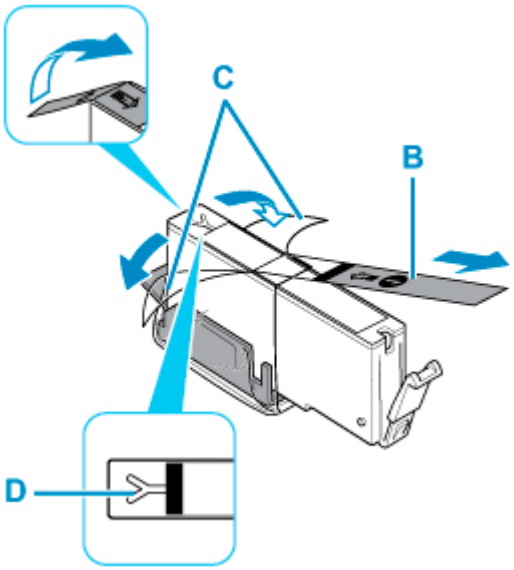

Important

- Handle an ink tank carefully. Do not drop or apply excessive pressure to it.
- If the orange tape remains on the Y-shape air hole (D), ink may splash or the printer may not print properly.

5. Hold the ink tank with the orange protective cap (E) pointing up while being careful not to block the Y-shape air hole (D).

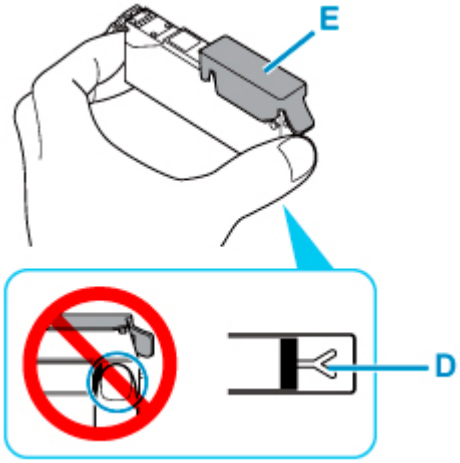

6. Lift up the tab on the orange protective cap (E) to remove it off GENTLY.

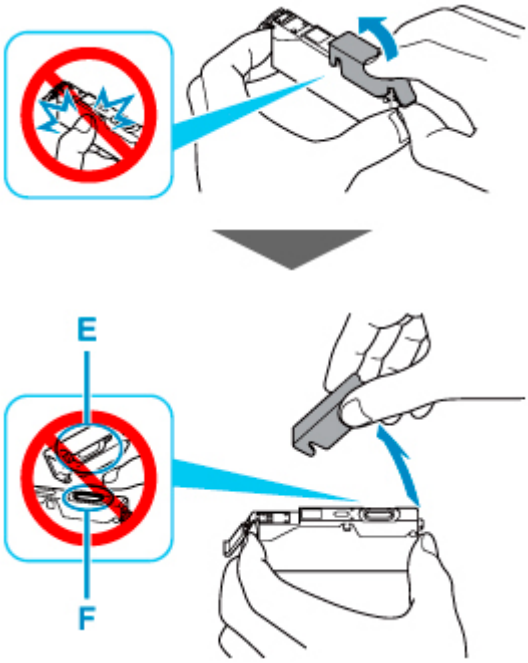

Important

- Do not push the sides of the ink tank. If you push the sides of the ink tank with the Y-shape air hole (D) blocked, ink may splash.
- Do not touch the inside of the orange protective cap (E) or the open ink port (F). The ink may stain your hands if you touch them.
- Do not reattach the protective cap (E) once you have removed it. Discard it according to the local laws and regulations regarding disposal of consumables.

7. Insert the front end of the ink tank into the print head at a slant.

Make sure that the position of the ink tank matches the label.

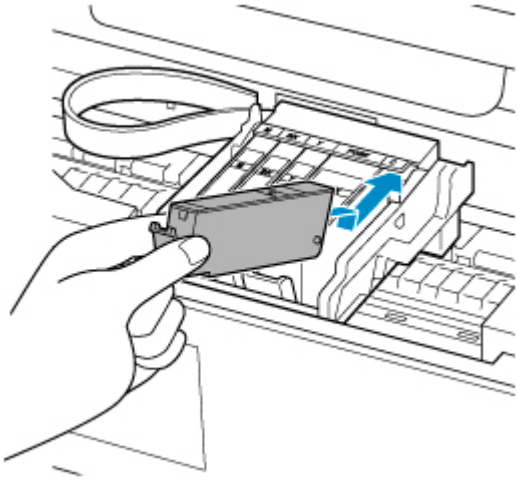

8. Press on the top of the ink tank until the ink tank snaps firmly into place.

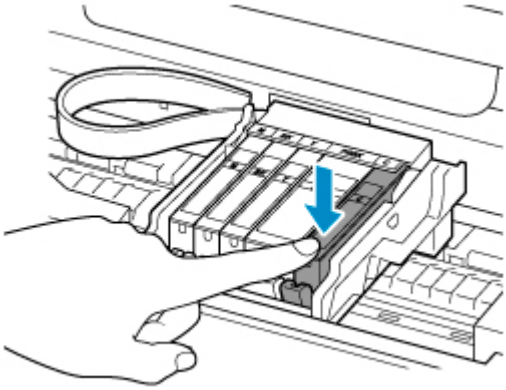

Important

- You cannot print if the ink tank is installed in the wrong position. Be sure to install the ink tank in the correct position according to the label on the print head holder.
- You cannot print unless all the ink tanks are installed. Be sure to install all the ink tanks.

9. Close the scanning unit / cover.

To close the scanning unit / cover, hold it up once, then take it down gently.

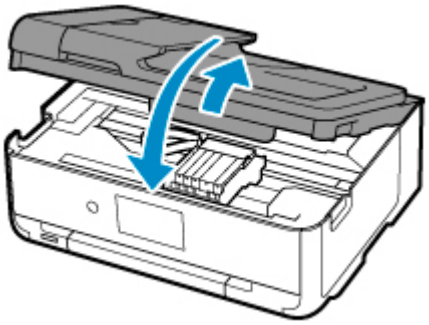

Caution

- When closing the scanning unit / cover, be careful not to get your fingers caught.

Note

- If the error message appears after the scanning unit / cover is closed, take appropriate action.

  An Error Occurs

- When you start printing after replacing the ink tank, the printer starts cleaning the print head automatically. Do not perform any other operations until the printer completes the cleaning of the print head.
- If the print head is out of alignment, as indicated by misaligned printed ruled lines or similar symptoms, align the print head.
- The printer may make noise during operation.

Notes on ink tanks

Important

- If you remove an ink tank, replace it immediately. Do not leave the printer with the ink tank removed.
- Use a new ink tank for replacement. Installing a used ink tank may cause the nozzles to clog. Furthermore, with such an ink tank, the printer will not be able to inform you when to replace the ink tank properly.
- Once an ink tank has been installed, do not remove it from the printer and leave it out in the open. This will cause the ink tank to dry out, and the printer may not operate properly when it is reinstalled. To maintain optimal printing quality, use an ink tank within six months of first use.

Note

- Color ink may be consumed even when printing a black-and-white document or when black-and-white printing is specified. Every ink is also consumed in the standard cleaning and deep cleaning of the print head, which may be necessary to maintain the performance of the printer.

  When an ink tank is out of ink, replace it immediately with a new one.

  Ink Tips

Checking Ink Status on the Touch Screen

1. Make sure that the power is turned on, and display the HOME screen.

   If the HOME screen is not displayed, tap (HOME) to display it.

2. Select (Hint) on HOME screen.

   Using the Operation Panel

   The hint menu screen will appear.

3. Select **Estimated ink levels**.

   A symbol appears in the area A if there is any information about the remaining ink level.

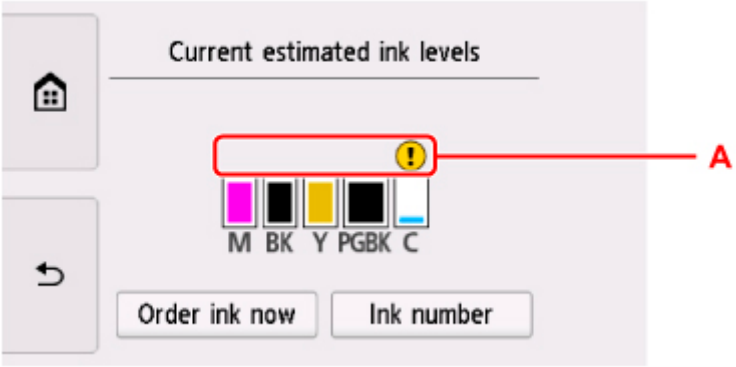

   Example:

   The ink is running low. Prepare a new ink tank.

   The resulting print quality may not be satisfactory, if printing is continued under this condition.

Note

- The above screen shows estimated ink levels.
- To access the ink purchasing site, select **Order ink now** on this screen and display the QR code. Cost of connecting to Internet is to be born by the customer.
- Selecting **Ink number** displays the **Ink number** screen for checking ink numbers.
- You can also check the ink status on a screen of the touch screen displayed while printing.
- You can also check the ink status on the computer screen.
  - For Windows:

    Checking Ink Status from Your Computer
  - For macOS:

    Checking Ink Status from Your Computer

Ink Tips

How is ink used for various purposes other than printing?

Ink may be used for purposes other than printing.

When you use the Canon printer for the first time after you install the bundled ink tanks, the printer consumes a small amount of ink in the amount to enable printing by filling the nozzles of the Print Head with ink. For this reason, the number of sheets that can be printed with the first ink tanks is fewer than the succeeding ink tanks.

The printing costs described in the brochures or websites are based on the consumption data from not the first ink tank /ink cartridge but the succeeding ink tank /ink cartridge.

Ink is sometimes used to maintain the optimal printing quality.

To keep printer's performance, Canon printer performs cleaning automatically according to its condition. When the printer performs cleaning, a small amount of ink is consumed. In this case, all colors of ink may be consumed.

[Cleaning function]

The cleaning function helps the printer to suck air bubbles or ink itself from the nozzle and thus prevents print quality degradation or nozzle clogging.

Does black-and-white printing use color ink?

Black-and-white printing may use ink other than black ink depending on the type of printing paper or the settings of the printer driver. So, color ink is consumed even when printing in black-and-white.

Why does the printer have two black ink tanks?

There are two kinds of black ink in the printer: dye ink (BK) and pigment ink (PGBK).

The dye ink is used mainly for printing photos, illustration, etc., and the pigment ink is used for text-based documents. Each has different purposes so that even if one runs out, another will not be used instead. If either of them runs out, the ink tank replacement is required.

These two inks are automatically used depending on the type of printing paper or the settings of the printer driver. You cannot change the usage of these inks yourself.

If Printing Is Faint or Uneven

- Maintenance Procedure
- Printing the Nozzle Check Pattern
- Examining the Nozzle Check Pattern
- Cleaning the Print Head
- Deep Print Head Cleaning
- Aligning the Print Head
- Aligning the Print Head Manually

Maintenance Procedure

If print results are blurred, colors are not printed correctly, or print results are unsatisfactory (e.g. misaligned printed ruled lines), perform the maintenance procedure below.

Important

- Do not rinse or wipe the print head and ink tank. This can cause trouble with the print head and ink tank.

Note

- Make sure that the orange protective tape does not remain on the ink tank.

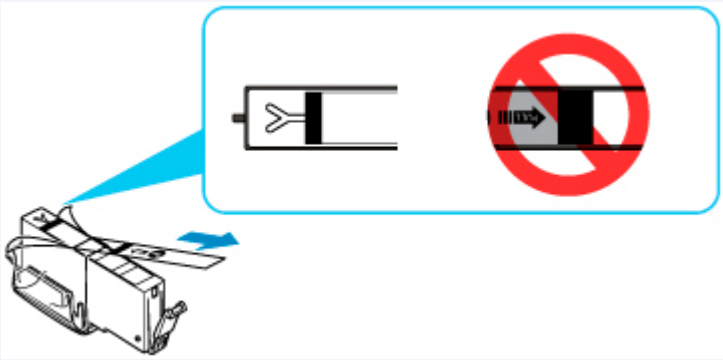

- Check the ink status.

  Checking Ink Status on the Touch Screen

- For Windows, increasing the print quality in the printer driver settings may improve the print result.

  Changing the Print Quality and Correcting Image Data

When the Print Results Are Blurred or Uneven:

Step1 Print the nozzle check pattern.

From the printer

Printing the Nozzle Check Pattern

From the computer

- For Windows:

  Printing a Nozzle Check Pattern

- For macOS:

  Printing a Nozzle Check Pattern

Step2 Examine the nozzle check pattern.

If there are missing lines or horizontal white streaks in the pattern:

Step3 Clean the print head.

From the printer

- Cleaning the Print Head

From the computer

- For Windows:
  - Cleaning the Print Heads
- For macOS:
  - Cleaning the Print Heads

After cleaning the print head, print and examine the nozzle check pattern: ➡ Step1

If the problem is not resolved after performing from step 1 to step 3 twice:

Step4 Clean the print head deeply.

From the printer

- Deep Print Head Cleaning

From the computer

- For Windows:
  - Cleaning the Print Heads
- For macOS:
  - Cleaning the Print Heads

Note

- When you have performed the procedure until step 4 and the problem has not been resolved, turn off the power and clean the print head deeply again after 24 hours.

  If the problem is still not resolved, the print head may be damaged. Contact your nearest Canon service center to request a repair.

When the Print Results Are Not Even such as the Ruled Lines Are Misaligned:

Step Align the print head.

From the printer

- Aligning the Print Head

From the computer

- For Windows:
  - Adjusting Print Head Position Automatically
- For macOS:

- Adjusting Print Head Position

Printing the Nozzle Check Pattern

Print the nozzle check pattern to determine whether the ink ejects properly from the print head nozzle.

Note

- If the remaining ink level is low, the nozzle check pattern will not be printed correctly. Replace the ink tank whose ink is low.

You need to prepare: a sheet of A4 or Letter-sized plain paper

1. Check that printer is turned on.

2. Load a sheet of A4 or Letter-sized plain paper in the cassette.

   After inserting the cassette into the printer, the paper setting confirmation screen appears on the touch screen. If the page size shown on the touch screen is **A4** or **Letter**, select **Yes**. If not, select **Change** and change the page size to **A4** or **Letter**.

   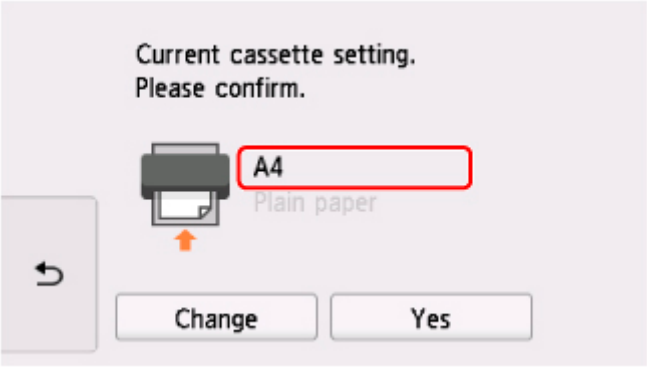

   Note

   - Be sure to load paper in the cassette. If you load paper on the rear tray, the nozzle check pattern is not printed.

3. Open operation panel and pull out paper output tray.

4. Select (Setup) on HOME screen.

   Using the Operation Panel

   The setup menu screen will appear.

5. Select **Maintenance**.

   The **Maintenance** screen will appear.

6. Select **Print nozzle check pattern**.

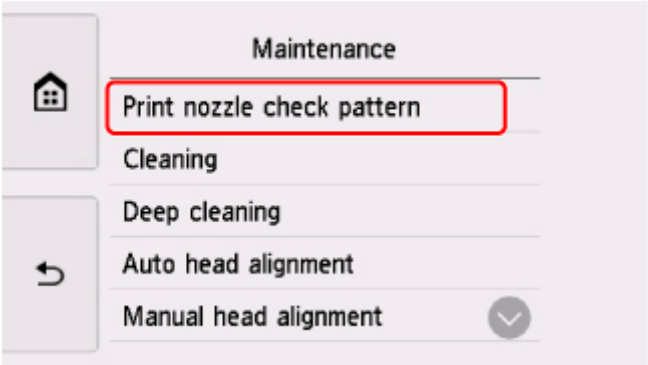

The confirmation screen will appear.

7. Select **Yes**.

   The nozzle check pattern will be printed and two pattern confirmation screens will appear on the touch screen.

8. Examine the nozzle check pattern.

Examining the Nozzle Check Pattern

Examine the nozzle check pattern, and clean the print head if necessary.

1. Check if there are missing lines in the pattern C or horizontal white streaks in the pattern D.

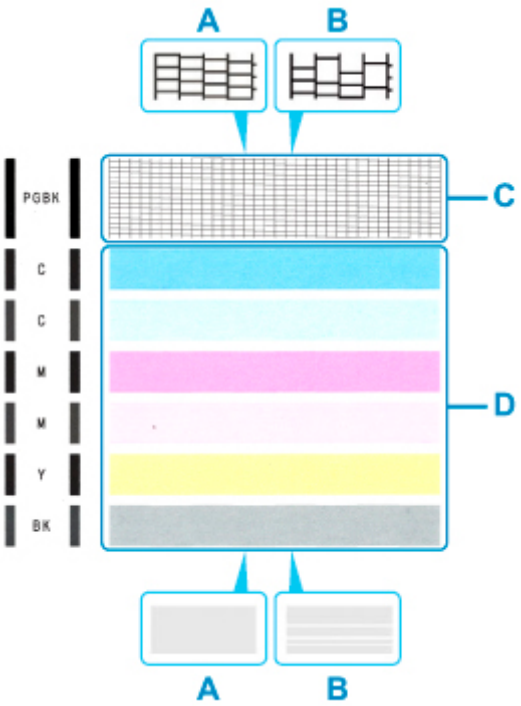

A: No missing lines/No horizontal white streaks
B: Lines are missing/Horizontal white streaks are present

2. Select the pattern that is closer to the printed nozzle check pattern on the confirmation screen.

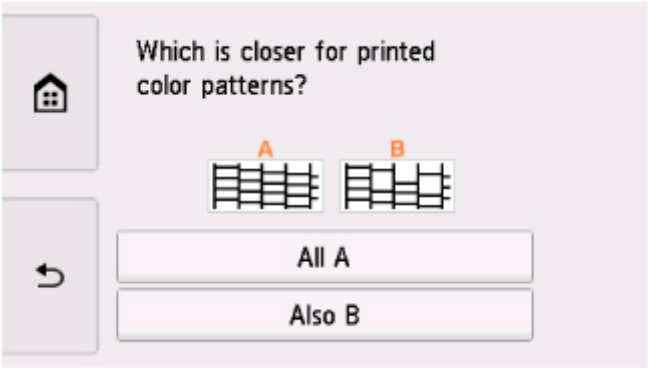

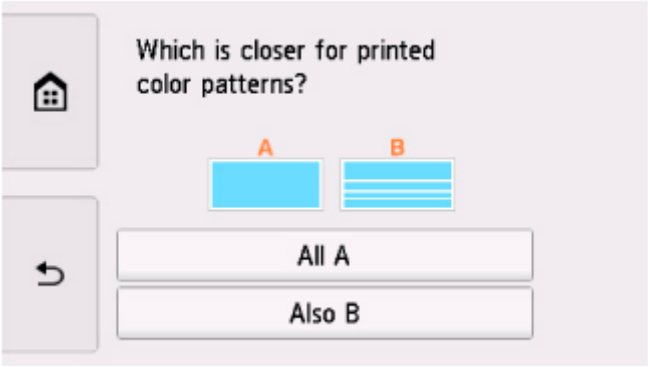

For A (no missing lines or no horizontal white streaks) in both the pattern C and pattern D:

The cleaning is not required. Select **All A**, confirm the message, then select **OK**.

The screen will return to the **Maintenance** screen.

For B (lines are missing or horizontal white streaks are present) in the pattern C or pattern D, or in both patterns:

The cleaning is required. Select **Also B**, then select **Yes** on the cleaning confirmation screen.

The printer starts cleaning the print head.

Cleaning the Print Head

If the pattern D or any color in the pattern C is not printed:

(Example: Magenta pattern is not printed)

The cleaning is required. Select **Also B**, then select **Yes** on the cleaning confirmation screen.

The printer starts cleaning the print head.

Cleaning the Print Head

Cleaning the Print Head

Clean the print head if lines are missing or if horizontal white streaks are present in the printed nozzle check pattern. Cleaning unclogs the nozzles and restores the print head condition. Cleaning the print head consumes ink, so clean the print head only when necessary.

You need to prepare: a sheet of A4 or Letter-sized plain paper

1. Check that printer is turned on.

2. Load a sheet of A4 or Letter-sized plain paper in the cassette.

   After inserting the cassette into the printer, the paper setting confirmation screen appears on the touch screen. If the page size shown on the touch screen is **A4** or **Letter**, select **Yes**. If not, select **Change** and change the page size to **A4** or **Letter**.

   Note

   - Be sure to load paper in the cassette. If you load paper on the rear tray, the nozzle check pattern is not printed.

3. Open operation panel and pull out paper output tray.

4. Select (Setup) on HOME screen.

   Using the Operation Panel

   The setup menu screen will appear.

5. Select **Maintenance**.

   The **Maintenance** screen will appear.

6. Select **Cleaning**.

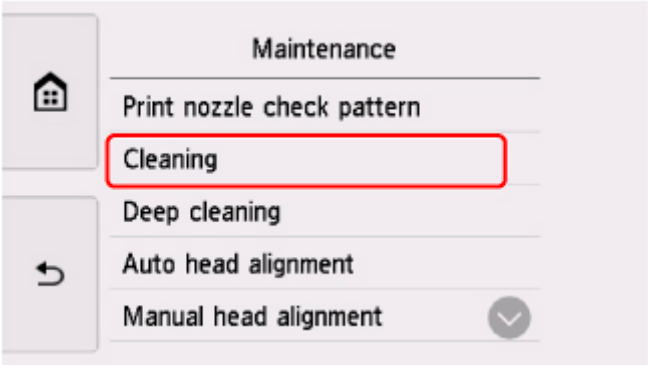

The confirmation screen will appear.

7. Select **Yes**.

   The printer starts cleaning the print head.

   Do not perform any other operations until the printer completes the cleaning of the print head. This takes about 1 minute.

   The pattern print confirmation screen will appear.

8. Select **Yes**.

   The nozzle check pattern will be printed.

9. Examine the nozzle check pattern.

Note

- If the problem is not resolved after cleaning the print head twice, clean the print head deeply.

Deep Print Head Cleaning

If print quality does not improve by the standard cleaning of the print head, clean the print head deeply. Cleaning the print head deeply consumes more ink than the standard cleaning of the print head, so clean the print head deeply only when necessary.

You need to prepare: a sheet of A4 or Letter-sized plain paper

1. Check that printer is turned on.

2. Load a sheet of A4 or Letter-sized plain paper in the cassette.

   After inserting the cassette into the printer, the paper setting confirmation screen appears on the touch screen. If the page size shown on the touch screen is **A4** or **Letter**, select **Yes**. If not, select **Change** and change the page size to **A4** or **Letter**.

   Note

   - Be sure to load paper in the cassette. If you load paper on the rear tray, the nozzle check pattern is not printed.

3. Open operation panel and pull out paper output tray.

4. Select (Setup) on HOME screen.

   Using the Operation Panel

   The setup menu screen will appear.

5. Select **Maintenance**.

   The **Maintenance** screen will appear.

6. Select **Deep cleaning**.

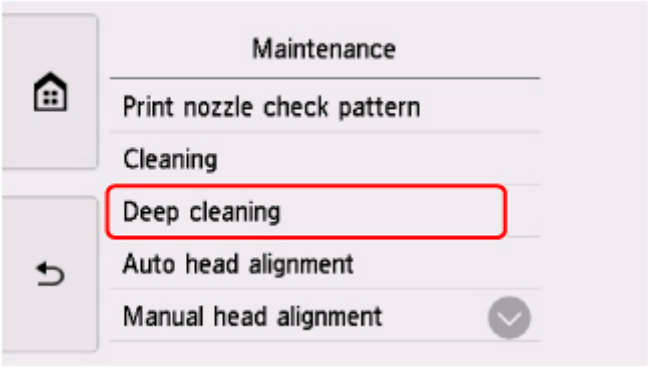

The confirmation screen will appear.

7. Select **Yes**.

   The printer starts cleaning the print head deeply.

   Do not perform any other operations until the printer completes the deep cleaning of the print head. This takes about 1 to 2 minutes.

   The pattern print confirmation screen will appear.

8. Select **Yes**.

   The nozzle check pattern will be printed.

9. When the completion message appears, select **OK**.

10. Examine the nozzle check pattern.

If a particular color is not printed properly, replace the ink tank of that color.

If the problem is not resolved, turn off the power and clean the print head deeply again after 24 hours.

If the problem is still not resolved, the print head may be damaged. Contact your nearest Canon service center to request a repair.

Aligning the Print Head

If printed ruled lines are misaligned or print results are otherwise unsatisfactory, adjust the print head position.

Note

- If the remaining ink level is low, the print head alignment sheet will not be printed correctly.

  Replace the ink tank whose ink is low.

- If ink runs out as the print head alignment sheet is printed, an error message appears on the touch screen.

  An Error Occurs

You need to prepare: two sheets of A4 or Letter-sized plain paper

1. Check that printer is turned on.

2. Load two sheets of A4 or Letter-sized plain paper in cassette.

   After inserting the cassette into the printer, the paper setting confirmation screen appears on the touch screen. If the page size shown on the touch screen is **A4** or **Letter**, select **Yes**. If not, select **Change** and change the page size to **A4** or **Letter**.

   Note

   - Be sure to load paper in the cassette. If you load paper on the rear tray, the print head alignment sheet is not printed.

3. Open operation panel and pull out paper output tray.

4. Select (Setup) on HOME screen.

   Using the Operation Panel

   The setup menu screen will appear.

5. Select **Maintenance**.

   The **Maintenance** screen will appear.

6. Select **Auto head alignment**.

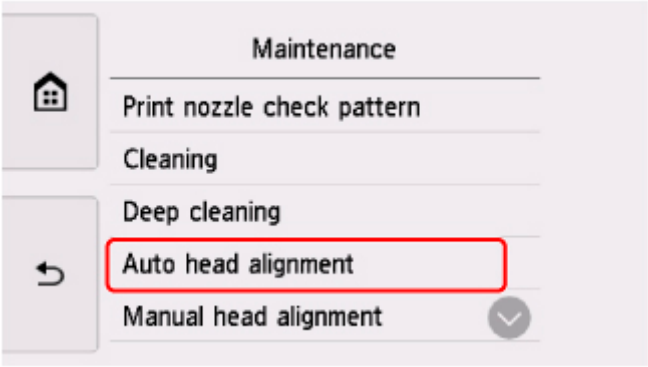

   The confirmation screen will appear.

7. Confirm the message, then select **Yes**.

   The print head alignment sheet is printed, and the print head is aligned automatically.

   This takes about 3 to 4 minutes.

   Note

   - If automatic print head alignment fails, an error message appears on the touch screen.

     An Error Occurs

8. When the completion message appears, select **OK**.

Note

- If the print results are still not satisfactory after adjusting the print head position as described above, adjust the print head position manually.

  You can also align the print head manually from a computer.

  - For Windows:

    Adjusting the Print Head Position Manually

  - For macOS:

    Adjusting Print Head Position

- To print and check the current head position adjustment values, select **Print the head alignment value** on the **Maintenance** screen.

Aligning the Print Head Manually

Try aligning the print head manually after automatic print head alignment if printing results are not as expected, as when printed ruled lines are misaligned.

Note

- For details on automatic print head alignment, see Aligning the Print Head.

What you will need: three sheets of A4 or Letter-sized plain paper

1. Check that printer is turned on.

2. Load three sheets of A4 or Letter-sized plain paper in cassette.

   After inserting the cassette into the printer, the paper setting confirmation screen appears on the touch screen.

   If the page size shown on the touch screen is **A4** or **Letter**, select **Yes**.

   If not, select **Change** and change the page size to **A4** or **Letter**.

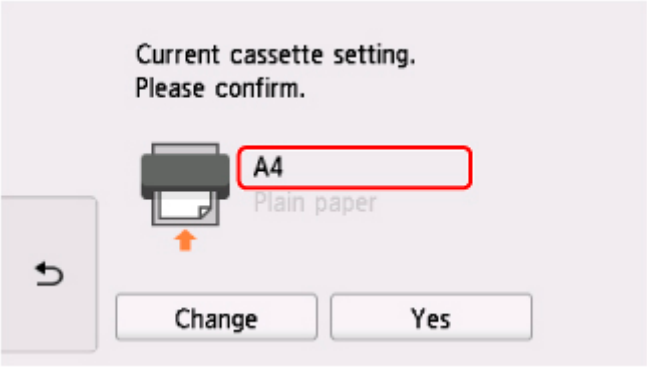

   Note

   - Be sure to load paper in the cassette. If you load paper on the rear tray, the print head alignment sheet is not printed.

3. Open operation panel and pull out paper output tray.

4. Select (Setup) on HOME screen.

   Using the Operation Panel

   The setup menu screen will appear.

5. Select **Maintenance**.

   The **Maintenance** screen will appear.

6. Select **Manual head alignment**.

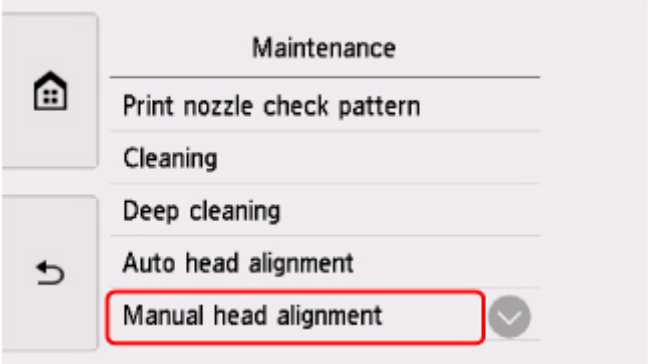

The confirmation screen will appear.

Note

- To print and check the current head position alignment values, select **Print the head alignment value**.

7. Check message and select **Yes**.

   The print head alignment pattern will be printed.

8. When **Did the patterns print correctly?** appears, make sure pattern was printed correctly, and if so, select **Yes**.

9. Check message and select **Next**.

   The input screen for head position alignment values is displayed.

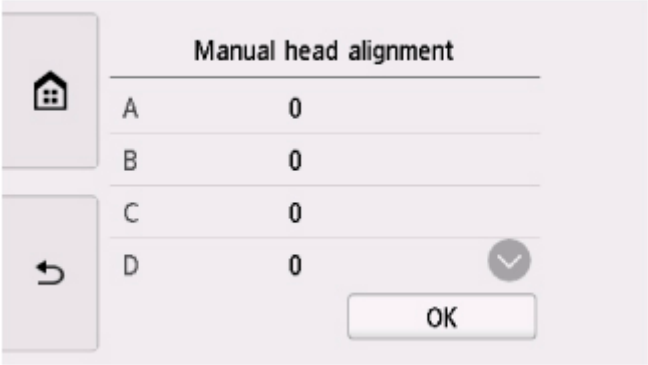

10. Examine first patterns and tap A. In column A, find pattern in which streaks are least noticeable, and then select the number of that pattern.

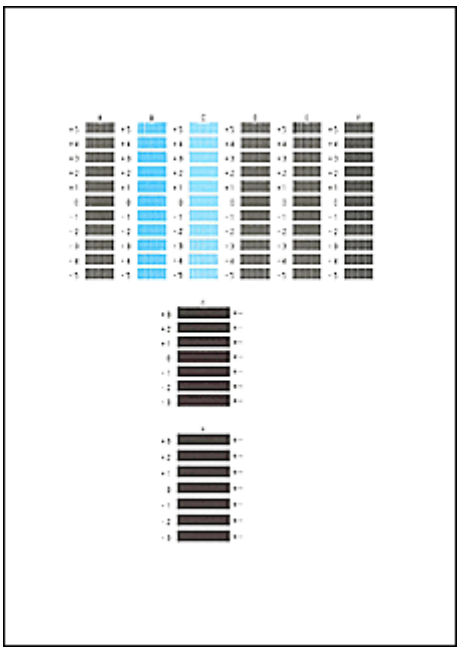

Note

- If all patterns look different, choose the pattern in which vertical streaks are least noticeable.

  Subtle vertical streaks

  Noticeable vertical streaks

- If all patterns look different, choose the pattern in which horizontal streaks are least noticeable.

  Subtle horizontal streaks

  Noticeable horizontal streaks

11. Repeat these steps until you have finished entering pattern numbers for columns B to H, and then select **OK**.

12. Check message and select **OK**.

The second set of patterns is printed.

13. Examine second patterns and tap I. In column I, find pattern in which streaks are least noticeable, and then select the number of that pattern.

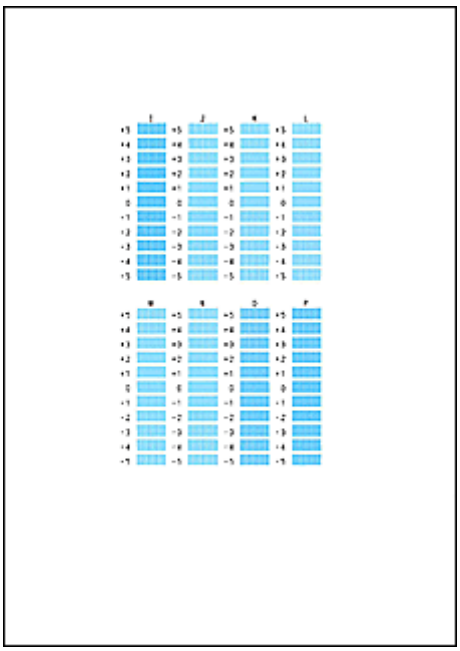

Note

- If all patterns look different, choose the pattern in which vertical streaks are least noticeable.

  Subtle vertical streaks

  Noticeable vertical streaks

14. Repeat these steps until you have finished entering pattern numbers for columns J to P, and then select **OK**.

15. Check message and select **OK**.

The third set of patterns is printed.

16. Examine third patterns and tap a. In column a, find pattern in which stripes are least noticeable, and then select the number of that pattern.

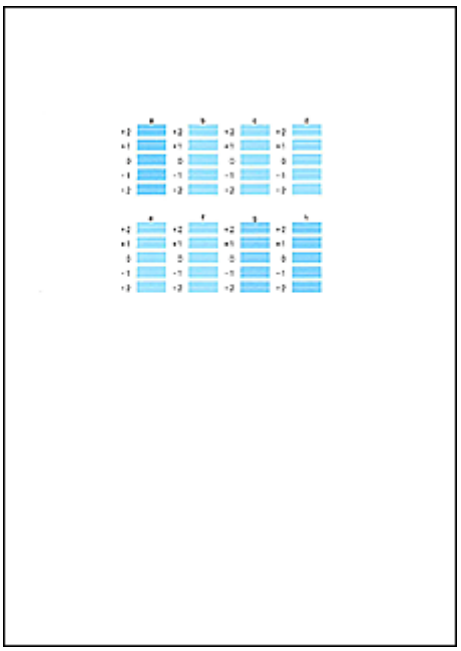

Note

- If all patterns look different, choose the pattern in which horizontal stripes are least noticeable.

  Subtle horizontal stripes

  Noticeable horizontal stripes

17. Repeat these steps until you have finished entering pattern numbers for columns b to h, and then select **OK**.

18. When confirmation message appears, select **OK**.

Performing Maintenance Functions from Your Computer (macOS)

- Opening Remote UI for Maintenance
- Cleaning the Print Heads
- Adjusting Print Head Position
- Checking Ink Status from Your Computer

Opening Remote UI for Maintenance

You can perform maintenance of printer and change the settings from a Remote UI.
The following is the procedure to open a Remote UI.

1. Open **System Preferences**, and select **Printers & Scanners**

2. Select your model from the printer list, and click **Options & Supplies...**

3. Click **Show Printer Webpage...** in **General** tab

   Remote UI starts.

   Note

   - The password may have to be entered after Remote UI starts. In such a case, enter the password and click **OK**. In case you do not know the password, click **About password and cookies**.

Related Topics

- Cleaning the Print Heads
- Adjusting Print Head Position
- Checking Ink Status from Your Computer
- Printing a Nozzle Check Pattern
- Managing the Printer Power
- Changing the Printer Operation Mode
- Reducing the Printer Noise

Cleaning the Print Heads

The print head cleaning function allows you to clear up clogged print head nozzle. Perform print head cleaning if printing is faint or a specific color fails to print, even though there is enough ink.

Cleaning

1. Select **Utilities** from Remote UI

2. Click **Cleaning**

   Before running the cleaning, check the following items:

   Check whether the printer is on and open the printer's scanning unit / cover.
   Check the following items for each ink. Then, if necessary, perform **Cleaning**.

   - Is there ink remaining in the tank?
   - Did you push in the ink tank completely until you heard a clicking sound?
   - If the orange tape is there, has it been peeled off completely?
     Any remaining tape will hinder ink output.
   - Did you install the ink tanks in their correct positions?

3. Execute cleaning

   Click **Yes**.

   Print head cleaning starts.

4. Complete cleaning

   Next, the message for nozzle check pattern printing is displayed.

5. Check the results

   To check whether the print quality has improved, click **Yes**. To cancel the check process, click **No**.

   If cleaning the head once does not resolve the print head problem, clean it once more.

Important

- **Cleaning** consumes a small amount of ink.
  Cleaning the print head frequently will rapidly deplete your printer's ink supply. Consequently, perform cleaning only when necessary.

Deep cleaning

Deep cleaning is more thorough than cleaning. Perform deep cleaning when two **Cleaning** attempts do not resolve the print head problem.

1. Select **Utilities** from Remote UI

2. Click **Deep cleaning**

   Before running the deep cleaning, check the following items:

   Check whether the printer is on and open the printer's scanning unit / cover.
   Check the following items for each ink. Then, if necessary, perform **Deep cleaning**.

   - Is there ink remaining in the tank?
   - Did you push in the ink tank completely until you heard a clicking sound?
   - If the orange tape is there, has it been peeled off completely?
     Any remaining tape will hinder ink output.
   - Did you install the ink tanks in their correct positions?

3. Execute deep cleaning

   Click **Yes**.

   Print head deep cleaning starts.

4. Complete deep cleaning

   Next, the message for nozzle check pattern printing is displayed.

5. Check the results

   To check whether the print quality has improved, click **Yes**. To cancel the check process, click **No**.

Important

- **Deep cleaning** consumes a larger amount of ink than **Cleaning**.
  Cleaning the print head frequently will rapidly deplete your printer's ink supply. Consequently, perform cleaning only when necessary.

Note

- If there is no sign of improvement after **Deep cleaning**, turn off the printer, wait 24 hours, and then perform **Deep cleaning** again. If there is still no sign of improvement, the ink may have run out or the print head may be worn. For details on the remedial action to be taken, see "Ink Does Not Come Out."

Related Topic

- Printing a Nozzle Check Pattern

Adjusting Print Head Position

Any error in the print head installation position can cause color and line shifts. Adjusting the print head position improves print results.

Auto head alignment

1. Select **Utilities** from Remote UI

2. Click **Auto head alignment**

   A message appears.

3. Load paper in printer

   In the cassette, load 2 sheets of plain A4-sized or Letter-sized paper.

4. Run head position adjustment

   Check that the printer power is on, and then click **Yes**.
   Head alignment starts. Proceed with the operations in accordance with the messages on the screen.

   Important

   - Do not open the scanning unit / cover while printing is in progress; otherwise, printing will stop.

Note

- You can print and check the current settings by clicking on **Print the head alignment value**.

Checking Ink Status from Your Computer

You can check the detailed information such as the remaining ink level and the ink tank types of your model.

If you select **Printer status** from Remote UI, the ink status appears as an illustration.

Estimated ink levels

You can check the types and levels of ink.
When ink levels are running low or an error occurs because there is no ink, a notification icon will appear.

Ink number

You can look up the correct ink tank for your printer.

Note

- To check the ink status, you can also display the pop-up menu of the Print dialog and select **Supply Levels**.

Cleaning

- Cleaning Exterior Surfaces
- Cleaning Platen and Document Cover
- Cleaning the ADF (Auto Document Feeder)
- Cleaning Paper Feed Rollers
- Cleaning Inside the Printer (Bottom Plate Cleaning)
- Cleaning Cassette Pads

Cleaning Paper Feed Rollers

If the paper feed roller is dirty or paper powder is attached to it, paper may not be fed properly.

In this case, clean the paper feed roller. Cleaning will wear out the paper feed roller, so perform this only when necessary.

You need to prepare: three sheets of A4 or Letter-sized plain paper

1. Check that printer is turned on.

2. Select (Setup) on HOME screen.

   Using the Operation Panel

   The setup menu screen will appear.

3. Select **Maintenance**.

   The **Maintenance** screen will appear.

4. Select **Roller cleaning**.

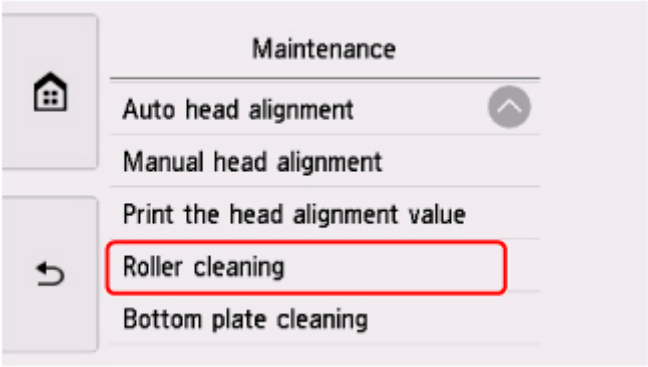

   The confirmation screen will appear.

5. Select **Yes**.

6. Select **Rear tray** or **Cassette** to clean the paper feed roller.

7. Follow the message to remove any paper from the paper source.

   If you clean the paper feed roller of cassette, remove any paper from the cassette, then push it back.

8. Select **OK**.

   The operation panel is opened and the paper output tray is pulled out automatically.

9. Make sure that the paper feed roller has stopped rotating, then follow the message to load the three sheets of A4 or Letter-sized plain paper.

10. Open operation panel and pull out paper output tray.

11. Select **OK**.

    The printer starts cleaning. The cleaning will be complete when the paper is ejected.

12. When the completion message appears, select **OK**.

If the problem is not resolved after cleaning the paper feed roller, contact your nearest Canon service center to request a repair.

Cleaning Inside the Printer (Bottom Plate Cleaning)

Remove stains from the inside of the printer. If the inside of the printer becomes dirty, printed paper may get dirty, so we recommend performing cleaning regularly.

You need to prepare: a sheet of A4 or Letter-sized plain paper*

* Be sure to use a new piece of paper.

1. Check that printer is turned on.

2. Select (Setup) on HOME screen.

   Using the Operation Panel

   The setup menu screen will appear.

3. Select **Maintenance**.

   The **Maintenance** screen will appear.

4. Select **Bottom plate cleaning**.

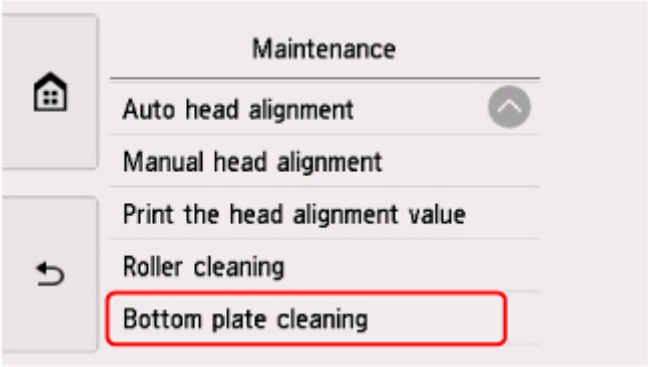

   The confirmation screen will appear.

5. Select **Yes**.

6. Follow the message to remove any paper from the rear tray, then select **OK**.

7. Fold a single sheet of A4 or Letter-sized plain paper in half lengthwise, then unfold the paper.

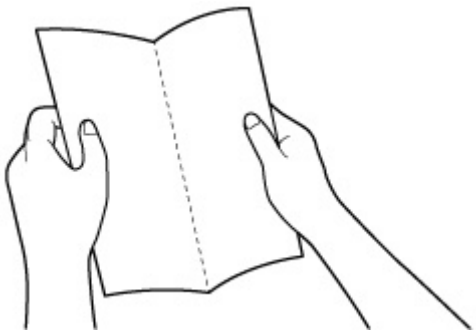

8. Select **OK**.

9. Load this sheet of paper sideways in the rear tray with the open side facing you.

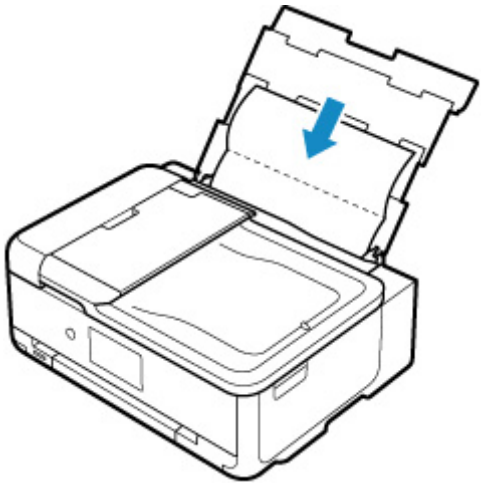

10. Open operation panel and pull out paper output tray.

11. Select **OK**.

    The paper cleans the inside of the printer as it feeds through the printer.

    Check the folded parts of the ejected paper. If they are smudged with ink, perform Bottom Plate Cleaning again.

12. When the completion message appears, select **OK**.

Note

- When performing Bottom Plate Cleaning again, be sure to use a new piece of paper.

If the problem is not resolved after performing cleaning again, the protrusions inside the printer may be stained. Wipe off any ink from the protrusions using a cotton swab or the like.

Important

- Be sure to turn off the power and unplug the power cord before cleaning the printer.

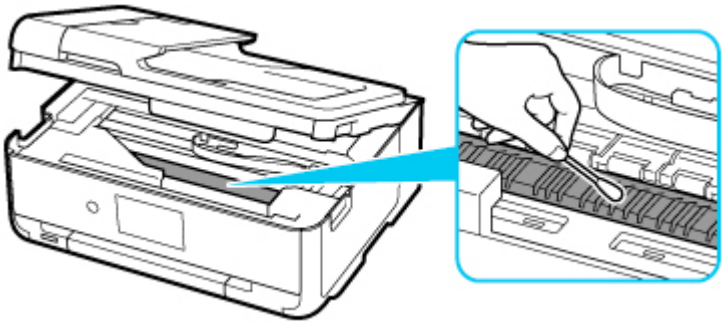

Overview

- **Safety**
  - Safety Precautions
  - Regulatory Information
  - WEEE (EU & EEA)
- **Handling Precautions**
  - Canceling Print Jobs
  - Legal Restrictions on Scanning/Copying
  - Transporting Your Printer
  - When Repairing, Lending, or Disposing of the Printer
  - Keeping Print Quality High
- **Main Components and Their Use**
  - Main Components
  - Power Supply
  - Using the Operation Panel
- **Changing Settings**
  - Changing Printer Settings from Your Computer (Windows)
  - Changing Printer Settings from Your Computer (macOS)
  - Changing Settings from Operation Panel
- **Specifications**

Safety

- Safety Precautions
- Regulatory Information
- WEEE (EU&EEA)

Safety Precautions

Safety Precautions

- This manual contains important notices and safety precautions about your printer.

  Do not use the printer in ways other than described in the accompanying manuals, as this may result in fire, electric shock or other unexpected accidents.

  Safety standard marks and declarations are only valid for the supported voltages and frequencies in the applicable countries or regions.

⚠ Warning

- Users with cardiac pacemakers:

  This product emits a low-level magnetic flux. If you feel abnormalities, please move away from the product and consult your doctor.

- Do not use the printer in the following cases:

  Stop use immediately, unplug the printer and call your local service representative to request repair.

  - Metal objects or liquids are spilt inside the printer,
  - The printer emits smoke, strange odors, or makes unusual noises,
  - The power cord or plug overheat or are broken, bent or damaged in any way.

- Failure to adhere to the following may result in fire, electric shock, or injury:
  - Do not place product close to the flammable solvents such as alcohol or thinner.
  - Do not open or modify the printer.
  - Use only the power cord/cables that came with your printer. Do not use these cables with other devices.
  - Do not plug in to voltages or frequencies other than those specified.
  - Plug the power cord into the socket completely.
  - Do not plug in or unplug the power cord with wet hands.
  - Do not damage the power cord by twisting, bundling, tying, pulling or excessively bending it.
  - Do not place heavy objects on the power cord.
  - Do not connect multiple power cords to a single electrical outlet. Do not use multiple extension cords.
  - Do not leave the printer plugged in during lightning storms.
  - Always unplug the power cord and cables when cleaning. Do not use flammable sprays or liquids such as alcohol or thinners for cleaning.
  - Unplug the power cord once a month to check that it is not overheating, rusted, bent, scratched, split, or otherwise damaged.

⚠ Caution

- Do not put your hands inside the printer while printing.
- Do not touch the print head or other metal parts immediately after printing.
- Ink
  - Keep ink out of reach of children.
  - If ink is accidentally licked or swallowed, rinse out your mouth and drink one or two glasses of water. If irritation or discomfort occurs, obtain medical advice immediately.

- In case ink gets in contact with eyes, rinse with water immediately. In case ink gets in contact with skin, wash with soap and water immediately. If irritation to eyes or skin persists, obtain medical advice immediately.

- Moving the printer
  - Do not hold the printer by the cassette. Hold the printer by its sides and carry it with both hands.

General Notices

Choosing a location

Refer to "Specifications" in the Online manual for details on operating environment.

- Do not install the printer in a location that is unstable or subject to excessive vibration.
- Do not install the printer in locations that get very hot (direct sunlight, or close to a heating source), very humid or dusty locations, or outdoors.
- Do not place the printer on a thick rug or carpet.
- Do not place the printer flush against a wall.

Power Supply

- Keep the area around the power outlet clear at all times so you can easily unplug the power cord if necessary.
- Never remove the plug by pulling on the cord.

General Notices

- Do not tilt the printer, stand it on end, or turn it upside down. This may cause ink to leak.

- Do not place anything on top of the printer. Be especially careful to avoid metal objects such as paper clips and staples, and containers holding flammable liquids such as alcohol or thinner.
- Do not apply excessive pressure when placing large objects on the platen glass.
- Do not attempt to open, disassemble or modify the ink tanks. Ink may leak and damage your printer.
- Do not throw print heads or ink tanks in the fire.

Regulatory Information

Users in the U.S.A.

FCC Notice (U.S.A. Only)
For 120V, 60Hz model
Model Number: K10480 (Contains FCC Approved WLAN Module K30365, FCC Approved Bluetooth K30375)

This device complies with Part 15 of the FCC Rules. Operation is subject to the following two conditions: (1) This device may not cause harmful interference, and (2) this device must accept any interference received, including interference that may cause undesired operation.

Note: This equipment has been tested and found to comply with the limits for a Class B digital device, pursuant to Part 15 of the FCC Rules. These limits are designed to provide reasonable protection against harmful interference in a residential installation. This equipment generates, uses and can radiate radio frequency energy and, if not installed and used in accordance with the instructions, may cause harmful interference to radio communications.
However, there is no guarantee that interference will not occur in a particular installation. If this equipment does cause harmful interference to radio or television reception, which can be determined by turning the equipment off and on, the user is encouraged to try to correct the interference by one or more of the following measures:

- Reorient or relocate the receiving antenna.
- Increase the separation between the equipment and receiver.
- Connect the equipment into an outlet on a circuit different from that to which the receiver is connected.
- Consult the dealer or an experienced radio/TV technician for help.

Use of a shielded cable is required to comply with Class B limits in Subpart B of Part 15 of the FCC Rules.

Do not make any changes or modifications to the equipment unless otherwise specified in the manual. If such changes or modifications should be made, you could be required to stop operation of the equipment.

FCC ID:AZDK30365, AZDK30375

Changes or modifications not expressly approved by the party responsible for compliance could void the user's authority to operate equipment.

This transmitter must not be co-located or operating in conjunction with any other antenna or transmitter.

The equipment complies with FCC radiation exposure limits for at uncontrolled equipment. This equipment should be installed and operated with minimum distance at least 20cm between the radiator and persons body (excluding extremities: hands, wrists, feet and ankles) and must not be colocated or operated with any other antenna or transmitter.

Canon U.S.A., Inc.
One Canon Park
Melville, New York 11747
1-800-652-2666

Interference

Do not use the printer around medical equipment or other electronic devices. Signals from the printer may interfere with the correct operation of these devices.

WEEE (EU&EEA)

Only for European Union and EEA (Norway, Iceland and Liechtenstein)

This symbol indicates that this product is not to be disposed of with your household waste, according to the WEEE Directive (2012/19/EU) and national legislation. This product should be handed over to a designated collection point, e.g., on an authorized one-for-one basis when you buy a new similar product or to an authorized collection site for recycling waste electrical and electronic equipment (EEE). Improper handling of this type of waste could have a possible negative impact on the environment and human health due to potentially hazardous substances that are generally associated with EEE. At the same time, your cooperation in the correct disposal of this product will contribute to the effective usage of natural resources. For more information about where you can drop off your waste equipment for recycling, please contact your local city office, waste authority, approved WEEE scheme or your household waste disposal service. For more information regarding return and recycling of WEEE products, please visit www.canon-europe.com/weee.

Nur für Europäische Union und EWR (Norwegen, Island und Liechtenstein)

Dieses Symbol weist darauf hin, dass dieses Produkt gemäß der EU-Richtlinie über Elektro- und Elektronik-Altgeräte (2012/19/EU) und nationalen Gesetzen nicht über den Hausmüll entsorgt werden darf. Dieses Produkt muss bei einer dafür vorgesehenen Sammelstelle abgegeben werden. Dies kann z. B. durch Rückgabe beim Kauf eines ähnlichen Produkts oder durch Abgabe bei einer autorisierten Sammelstelle für die Wiederaufbereitung von Elektro- und Elektronik-Altgeräten geschehen. Der unsachgemäße Umgang mit Altgeräten kann aufgrund potentiell gefährlicher Stoffe, die generell mit Elektro- und Elektronik-Altgeräten in Verbindung stehen, negative Auswirkungen auf die Umwelt und die menschliche Gesundheit haben. Durch die umweltgerechte Entsorgung dieses Produkts tragen Sie außerdem zu einer effektiven Nutzung natürlicher Ressourcen bei. Informationen zu Sammelstellen für Altgeräte erhalten Sie bei Ihrer Stadtverwaltung, dem öffentlich-rechtlichen Entsorgungsträger, einer autorisierten Stelle für die Entsorgung von Elektro- und Elektronik-Altgeräten oder Ihrem örtlichen Entsorgungsunternehmen. Weitere Informationen zur Rückgabe und Entsorgung von Elektro- und Elektronik-Altgeräten finden Sie unter www.canon-europe.com/weee.

Union Européenne, Norvège, Islande et Liechtenstein uniquement.

Ce symbole indique que ce produit ne doit pas être jeté avec les ordures ménagères, conformément à la directive DEEE (2012/19/UE) et à la réglementation de votre pays. Ce produit doit être confié au distributeur à chaque fois que vous achetez un produit neuf similaire, ou à un point de collecte mis en place par les collectivités locales pour le recyclage des Déchets des Équipements Électriques et Électroniques (DEEE). Le traitement inapproprié de ce type de déchet risque d'avoir des répercussions sur l'environnement et la santé humaine, du fait de la présence de substances potentiellement dangereuses généralement associées aux équipements électriques et électroniques. Parallèlement, votre entière coopération dans le cadre de la mise au rebut correcte de ce produit favorisera une meilleure utilisation des ressources naturelles. Pour plus d'informations sur les points de collecte des équipements à recycler, contactez vos services municipaux, les autorités locales compétentes, le plan DEEE approuvé ou le service d'enlèvement des ordures ménagères. Pour plus d'informations sur le retour et le recyclage des produits DEEE, consultez le site: www.canon-europe.com/weee.

Uitsluitend bestemd voor de Europese Unie en EER (Noorwegen, IJsland en Liechtenstein)

Dit symbool geeft aan dat dit product in overeenstemming met de AEEA-richtlijn (2012/19/EU) en de nationale wetgeving niet mag worden afgevoerd met het huishoudelijk afval. Dit product moet worden ingeleverd bij een aangewezen, geautoriseerd inzamelpunt, bijvoorbeeld wanneer u een nieuw gelijksoortig product aanschaft, of bij een geautoriseerd inzamelpunt voor hergebruik van elektrische en elektronische apparatuur (EEA). Een onjuiste afvoer van dit type afval kan leiden tot negatieve effecten op het milieu en de volksgezondheid als gevolg van potentieel gevaarlijke stoffen die veel voorkomen in elektrische en elektronische apparatuur (EEA). Bovendien werkt u door een juiste afvoer van dit product mee aan het effectieve gebruik van natuurlijke hulpbronnen. Voor meer informatie over waar u uw afgedankte apparatuur kunt inleveren voor recycling kunt u contact opnemen met het gemeentehuis in uw woonplaats, de reinigingsdienst, of het afvalverwerkingsbedrijf. U kunt ook het schema voor de afvoer van afgedankte elektrische en elektronische apparatuur (AEEA) raadplegen. Ga voor meer informatie over het inzamelen en recyclen van afgedankte elektrische en elektronische apparatuur naar www.canon-europe.com/weee.

Sólo para la Unión Europea y el Área Económica Europea (Noruega, Islandia y Liechtenstein)

Este símbolo indica que este producto no debe desecharse con los desperdicios domésticos, de acuerdo con la directiva RAEE (2012/19/UE) y con la legislación nacional. Este producto debe entregarse en uno de los puntos de recogida designados, como por ejemplo, entregándolo en el lugar de venta al comprar un producto similar o depositándolo en un lugar de recogida autorizado para el reciclado de residuos de aparatos eléctricos y electrónicos (RAEE). La manipulación inapropiada de este tipo de desechos podría tener un impacto negativo en el entorno y la salud humana, debido a las sustancias potencialmente

peligrosas que normalmente están asociadas con los RAEE. Al mismo tiempo, su cooperación a la hora de desechar correctamente este producto contribuirá a la utilización eficazde los recursos naturales. Para más información sobre cómo puede eliminar el equipo para su reciclado, póngase en contacto con las autoridades locales, con las autoridades encargadas de los desechos, con un sistema de gestión RAEE autorizado o con el servicio de recogida de basuras doméstico. Si desea más información acerca de la devolución y reciclado de RAEE, visite la web www.canon-europe.com/weee.

Només per a la Unió Europea i a l'Espai Econòmic Europeu (Noruega, Islàndia i Liechtenstein)

Aquest símbol indica que aquest producte no s'ha de llençar a les escombraries de la llar, d'acord amb la Directiva RAEE (2012/19/UE) i la legislació nacional. Aquest producte s'hauria de lliurar en un dels punts de recollida designats, com per exemple, intercanviant-lo un per un en comprar un producte similar o lliurant-lo en un lloc de recollida autoritzat per al reciclatge de residus d'aparells elèctrics i electrònics (AEE). La manipulació inadequada d'aquest tipus de residus podria tenir un impacte negatiu en l'entorn i en la salut humana, a causa de les substàncies potencialment perilloses que normalment estan associades als AEE. Així mateix, la vostra cooperació a l'hora de llençar correctament aquest producte contribuirà a la utilització efectiva dels recursos naturals. Per a més informació sobre els punts on podeu lliurar aquest producte per procedir al seu reciclatge, adreceu-vos a la vostra oficina municipal, a les autoritats encarregades dels residus, al pla de residus homologat per la RAEE o al servei de recollida de deixalles domèstiques de la vostra localitat. Per a més informació sobre la devolució i el reciclatge de productes RAEE, visiteu www.canon-europe.com/weee.

Solo per Unione Europea e SEE (Norvegia, Islanda e Liechtenstein)

Questo simbolo indica che il prodotto deve essere oggetto di raccolta separata in conformità alla Direttiva RAEE (2012/19/UE) e alla normativa locale vigente. Il prodotto deve essere smaltito presso un centro di raccolta differenziata, un distributore autorizzato che applichi il principio dell'"uno contro uno", ovvero del ritiro della vecchia apparecchiatura elettrica al momento dell'acquisto di una nuova, o un impianto autorizzato al riciclaggio dei rifiuti di apparecchiature elettriche ed elettroniche. La gestione impropria di questo tipo di rifiuti può avere un impatto negativo sull'ambiente e sulla salute umana causato dalle sostanze potenzialmente pericolose che potrebbero essere contenute nelle apparecchiature elettriche ed elettroniche. Un corretto smaltimento di tali prodotti contribuirà inoltre a un uso efficace delle risorse naturali ed eviterà di incorrere nelle sanzioni amministrative di cui all'art. 255 e successivi del Decreto Legislativo n. 152/06. Per ulteriori informazioni sullo smaltimento e il recupero dei Rifiuti di Apparecchiature Elettriche ed Elettroniche, consultare la Direttiva RAEE, rivolgersi alle autorità competenti, oppure visitare il sito www.canon-europe.com/weee.

Apenas para a União Europeia e AEE (Noruega, Islândia e Liechtenstein)

Este símbolo indica que o produto não deve ser colocado no lixo doméstico, de acordo com a Directiva REEE (2012/19/UE) e a legislação nacional. Este produto deverá ser colocado num ponto de recolha designado, por exemplo, num local próprio autorizado quando adquirir um produto semelhante novo ou num local de recolha autorizado para reciclar resíduos de equipamentos eléctricos e electrónicos (EEE). O tratamento inadequado deste tipo de resíduo poderá causar um impacto negativo no ambiente e na saúde humana devido às substâncias potencialmente perigosas normalmente associadas aos equipamentos eléctricos e electrónicos. Simultaneamente, a sua cooperação no tratamento correcto deste produto contribuirá para a utilização eficaz dos recursos naturais. Para mais informações sobre os locais onde o equipamento poderá ser reciclado, contacte os serviços locais, a autoridade responsável pelos resíduos, o esquema REEE aprovado ou o serviço de tratamento de lixo doméstico. Para mais informações sobre a devolução e reciclagem de produtos REEE, vá a www.canon-europe.com/weee.

Gælder kun i Europæiske Union og EØS (Norge, Island og Liechtenstein)

Dette symbol angiver, at det pågældende produkt ikke må bortskaffes sammen med dagrenovation jf. direktivet om affald af elektrisk og elektronisk udstyr (WEEE) (2012/19/EU) og gældende national lovgivning. Det pågældende produkt skal afleveres på et nærmere specificeret indsamlingssted, f.eks. i overensstemmelse med en godkendt én-til-én-procedure, når du indkøber et nyt tilsvarende produkt, eller produktet skal afleveres på et godkendt indsamlingssted for elektronikaffald. Forkert håndtering af denne type affald kan medføre negative konsekvenser for miljøet og menneskers helbred på grund af de potentielt sundhedsskadelige stoffer, der generelt kan forefindes i elektrisk og elektronisk udstyr. Når du foretager korrekt bortskaffelse af det pågældende produkt, bidrager du til effektiv brug af naturressourcerne. Yderligere oplysninger om, hvor du kan bortskaffe dit elektronikaffald med henblik på genanvendelse, får du hos de kommunale renovationsmyndigheder. Yderligere oplysninger om returnering og genanvendelse af affald af elektrisk og elektronisk udstyr får du ved at besøge www.canon-europe.com/weee.

Μόνο για την Ευρωπαϊκή Ένωση και τον ΕΟΧ (Νορβηγία, Ισλανδία και Λιχτενστάιν)

Αυτό το σύμβολο υποδηλώνει ότι αυτό το προϊόν δεν πρέπει να απορρίπτεται μαζί με τα οικιακά απορρίμματα, σύμφωνα με την Οδηγία σχετικά με τα Απόβλητα Ηλεκτρικού και Ηλεκτρονικού Εξοπλισμού (ΑΗΗΕ) (2012/19/ΕΕ) και την εθνική σας νομοθεσία. Αυτό το προϊόν πρέπει να παραδίδεται σε καθορισμένο σημείο συλλογής, π.χ. σε μια εξουσιοδοτημένη βάση ανταλλαγής όταν αγοράζετε ένα νέο παρόμοιο προϊόν ή σε μια εξουσιοδοτημένη θέση συλλογής για την ανακύκλωση των αποβλήτων Ηλεκτρικού και Ηλεκτρονικού Εξοπλισμού (ΗΗΕ). Ο ακατάλληλος χειρισμός αυτού του τύπου αποβλήτων μπορεί να έχει αρνητικό αντίκτυπο στο περιβάλλον και την υγεία του ανθρώπου, λόγω δυνητικώς επικίνδυνων ουσιών που γενικά συνδέονται με τον ΗΗΕ. Ταυτόχρονα, η συνεργασία σας όσον αφορά τη σωστή απόρριψη αυτού του προϊόντος θα συμβάλει στην αποτελεσματική χρήση των φυσικών πόρων. Για περισσότερες πληροφορίες σχετικά με τα σημεία όπου μπορείτε να απορρίψετε τον εξοπλισμό σας για ανακύκλωση, επικοινωνήστε με το τοπικό γραφείο της πόλης σας, την υπηρεσία απορριμμάτων, το εγκεκριμένο σχήμα ΑΗΗΕ ή την υπηρεσία απόρριψης οικιακών αποβλήτων. Για περισσότερες πληροφορίες σχετικά με την επιστροφή και την ανακύκλωση των προϊόντων ΑΗΗΕ, επισκεφθείτε την τοποθεσία www.canon-europe.com/weee.

Gjelder kun den europeiske union og EØS (Norge, Island og Liechtenstein)

Dette symbolet indikerer at dette produktet ikke skal kastes sammen med husholdningsavfall, i henhold til WEEE-direktiv (2012/19/EU) og nasjonal lov. Produktet må leveres til et dertil egnet innsamlingspunkt, det vil si på en autorisert en-til-en-basis når du kjøper et nytt lignende produkt, eller til et autorisert innsamlingssted for resirkulering av avfall fra elektrisk og elektronisk utstyr (EE-utstyr). Feil håndtering av denne typen avfall kan være miljø- og helseskadelig på grunn av potensielt skadelige stoffer som ofte brukes i EE-utstyr. Samtidig bidrar din innsats for korrekt avhending av produktet til effektiv bruk av naturressurser. Du kan få mer informasjon om hvor du kan avhende utrangert utstyr til resirkulering ved å kontakte lokale myndigheter, et godkjent WEEE-program eller husholdningens renovasjonsselskap. Du finner mer informasjon om retur og resirkulering av WEEE-produkter på www.canon-europe.com/weee.

Vain Euroopan unionin sekä ETA:n (Norja, Islanti ja Liechtenstein) alueelle.

Tämä tunnus osoittaa, että sähkö- ja elektroniikkalaiteromua koskeva direktiivi (SER-direktiivi, 2012/19/EU) sekä kansallinen lainsäädäntö kieltävät tuotteen hävittämisen talousjätteen mukana. Tuote on vietävä asianmukaiseen keräyspisteeseen, esimerkiksi kodinkoneliikkeeseen uutta vastaavaa tuotetta ostettaessa tai viralliseen sähkö- ja elektroniikkalaiteromun keräyspisteeseen. Sähkö- ja elektroniikkalaiteromun virheellinen käsittely voi vahingoittaa ympäristöä ja ihmisten terveyttä, koska laitteet saattavat sisältää ympäristölle ja terveydelle haitallisia aineita. Lisäksi tuotteen asianmukainen hävittäminen säästää luonnonvaroja. Lisätietoja sähkö- ja elektroniikkalaiteromun keräyspisteistä saat kaupunkien ja kuntien tiedotuksesta, jätehuoltoviranomaisilta, sähkö- ja elektroniikkalaiteromun

kierrätysjärjestelmän ylläpitäjältä ja jätehuoltoyhtiöltä. Lisätietoja sähkö- ja elektroniikkalaiteromun keräyksestä ja kierrätyksestä on osoitteessa www.canon-europe.com/weee.

Endast för Europeiska unionen och EES (Norge, Island och Liechtenstein)

Den här symbolen visar att produkten enligt WEEE-direktivet (2012/19/EU) och nationell lagstiftning inte får sorteras och slängas som hushållsavfall. Den här produkten ska lämnas in på en därför avsedd insamlingsplats, t.ex. på en återvinningsstation auktoriserad att hantera elektrisk och elektronisk utrustning (EE-utrustning) eller hos handlare som är auktoriserade att byta in varor då nya, motsvarande köps (en mot en). Olämplig hantering av avfall av den här typen kan ha en negativ inverkan på miljön och människors hälsa på grund av de potentiellt farliga ämnen som kan återfinnas i elektrisk och elektronisk utrustning. Din medverkan till en korrekt avfallshantering av den här produkten bidrar dessutom till en effektiv användning av naturresurserna. Kontakta ditt lokala kommunkontor, berörd myndighet, företag för avfallshantering eller ta del av en godkänd WEEE-organisation om du vill ha mer information om var du kan lämna den kasserade produkten för återvinning. För mer information om inlämning och återvinning av WEEE-produkter, se www.canon-europe.com/weee.

Pouze Evropská unie a EHP (Norsko, Island a Lichtenštejnsko)

Tento symbol znamená, že podle směrnice o OEEZ (2012/19/EU) a podle vnitrostátních právních předpisů nemá být tento výrobek likvidován s odpadem z domácností. Tento výrobek má být vrácen do sběrného místa, např. v rámci autorizovaného systému odběru jednoho výrobku za jeden nově prodaný podobný výrobek nebo v autorizovaném sběrném místě pro recyklaci odpadních elektrických a elektronických zařízení (OEEZ). Nevhodné nakládání s tímto druhem odpadu by mohlo mít negativní dopad na životní prostředí a lidské zdraví, protože elektrická a elektronická zařízení zpravidla obsahují potenciálně nebezpečné látky. Vaše spolupráce na správné likvidaci tohoto výrobku současně napomůže efektivnímu využívání přírodních zdrojů. Další informace o místech sběru vašeho odpadního zařízení k recyklaci vám sdělí místní úřad vaší obce, správní orgán vykonávající dozor nad likvidací odpadu, sběrny OEEZ nebo služba pro odvoz komunálního odpadu. Další informace týkající se vracení a recyklace OEEZ naleznete na adrese www.canon-europe.com/weee.

Csak az Európai Unió és az EGT (Norvégia, Izland és Liechtenstein) országaiban

Ez a szimbólum azt jelzi, hogy a helyi törvények és a WEEE-irányelv (2012/19/EU) szerint a termék nem kezelhető háztartási hulladékként. A terméket a kijelölt nyilvános gyűjtőpontokon kell leadni, például hasonló cserekészülék vásárlásakor, illetve bármelyik, elektromos és elektronikai berendezésekből származó hulladék (WEEE) átvételére feljogosított gyűjtőponton. Az ilyen jellegű hulladékok a nem megfelelő kezelés esetén a bennük található veszélyes anyagok révén ártalmasak lehetnek a környezetre és az emberek egészségére. Továbbá, a termékből származó hulladék megfelelő kezelésével hozzájárulhat a természetes nyersanyagok hatékonyabb hasznosításához. A berendezésekből származó, újrahasznosítható hulladékok elhelyezésére vonatkozó további tudnivalókért forduljon a helyi önkormányzathoz, a közterület-fenntartó vállalathoz, a háztartási hulladék begyűjtését végző vállalathoz, illetve a hivatalos WEEE-képviselethez. További tudnivalókat a WEEE-termékek visszajuttatásáról és újrahasznosításáról a www.canon-europe.com/weee.

Tylko dla krajów Unii Europejskiej oraz EOG (Norwegia, Islandia i Liechtenstein)

Ten symbol oznacza, że zgodnie z dyrektywą WEEE dotyczącą zużytego sprzętu elektrycznego i elektronicznego (2012/19/UE) oraz przepisami lokalnymi nie należy wyrzucać tego produktu razem z odpadami gospodarstwa domowego. Produkt należy przekazać do wyznaczonego punktu gromadzenia odpadów, np. firmie, od której kupowany jest nowy, podobny produkt lub do autoryzowanego punktu gromadzenia zużytego sprzętu elektrycznego i elektronicznego w celu poddania go recyklingowi. Usuwanie tego typu odpadów w nieodpowiedni sposób może mieć negatywny wpływ na otoczenie i zdrowie innych osób ze względu na niebezpieczne substancje stosowane w takim sprzęcie. Jednocześnie pozbycie się zużytego sprzętu w zalecany sposób przyczynia się do właściwego wykorzystania zasobów naturalnych. Aby uzyskać więcej informacji na temat punktów, do których można dostarczyć sprzęt do recyklingu, prosimy skontaktować się z lokalnym urzędem miasta, zakładem utylizacji odpadów, skorzystać z instrukcji zatwierdzonej dyrektywą WEEE lub skontaktować się z przedsiębiorstwem zajmującym się wywozem odpadów domowych. Więcej informacji o zwracaniu i recyklingu zużytego sprzętu elektrycznego i elektronicznego znajduje się w witrynie www.canon-europe.com/weee.

Platí len pre štáty Európskej únie a EHP (Nórsko, Island a Lichtenštajnsko)

Tento symbol znamená, že podľa Smernice 2012/19/EÚ o odpade z elektrických a elektronických zariadení (OEEZ) a podľa platnej legislatívy Slovenskej republiky sa tento produkt nesmie likvidovať spolu s komunálnym odpadom. Produkt je potrebné odovzdať do určenej zberne, napr. prostredníctvom výmeny za kúpu nového podobného produktu, alebo na autorizované zberné miesto, ktoré spracúva odpad z elektrických a elektronických zariadení (EEZ). Nesprávna manipulácia s takýmto typom odpadu môže mať negatívny vplyv na životné prostredie a ľudské zdravie, pretože elektrické a elektronické zariadenia obsahujú potenciálne nebezpečné látky. Spoluprácou na správnej likvidácii produktu prispejete

k účinnému využívaniu prírodných zdrojov. Ďalšie informácie o mieste recyklácie opotrebovaných zariadení získate od miestneho úradu, úradu životného prostredia, zo schváleného plánu OEEZ alebo od spoločnosti, ktorá zaisťuje likvidáciu komunálneho odpadu. Viac informácií nájdete aj na webovej stránke: www.canon-europe.com/weee.

Üksnes Euroopa Liit ja EMP (Norra, Island ja Liechtenstein)

See sümbol näitab, et antud toodet ei tohi vastavalt elektri- ja elektroonikaseadmete jäätmeid käsitlevale direktiivile (2012/19/EL) ning teie riigis kehtivatele õigusaktidele utiliseerida koos olmejäätmetega. Antud toode tuleb anda selleks määratud kogumispunkti, nt müügipunkt, mis on volitatud üks ühe vastu vahetama, kui ostate uue sarnase toote, või elektri- ja elektroonikaseadmete jäätmete ümbertöötlemiseks mõeldud kogumispunkti. Täiendava teabe saamiseks elektri- ja elektroonikaseadmetest tekkinud jäätmete tagastamise ja ümbertöötlemise kohta võtke ühendust kohaliku omavalitsusega, asjakohase valitsusasutusega, asjakohase tootjavastutusorganisatsiooniga või olmejäätmete käitlejaga. Lisateavet leitate ka Interneti-leheküljelt www.canon-europe.com/weee.

Tikai Eiropas Savienībai un EEZ (Norvēģijai, Islandei un Lihtenšteinai)

Šis simbols norāda, ka atbilstoši ES Direktīvai (2012/19/ES) par elektrisko un elektronisko iekārtu atkritumiem (EEIA) un vietējiem tiesību aktiem no šī izstrādājuma nedrīkst atbrīvoties, izmetot to kopā ar sadzīves atkritumiem. Šis izstrādājums ir jānodod piemērotā savākšanas vietā, piemēram, apstiprinātā veikalā, kur iegādājaties līdzīgu jaunu produktu un atstājat veco, vai apstiprinātā vietā izlietotu elektrisko un elektronisko iekārtu pārstrādei. Nepareiza šāda veida atkritumu apsaimniekošana var apdraudēt vidi un cilvēka veselību tādu iespējami bīstamu vielu dēļ, kas parasti ir elektriskajās un elektroniskajās iekārtās. Turklāt jūsu atbalsts pareizā šāda veida atkritumu apsaimniekošanā sekmēs efektīvu dabas resursu izmantošanu. Lai saņemtu pilnīgāku informāciju par vietām, kur izlietoto iekārtu var nodot pārstrādei, sazinieties ar vietējo pašvaldību, atkritumu savākšanas atbildīgo dienestu, pilnvarotu EEIA struktūru vai sadzīves atkritumu apsaimniekošanas iestādi. Lai saņemtu plašāku informāciju par elektrisko un elektronisko iekārtu nodošanu pārstrādei, apmeklējiet tīmekļa vietni www.canon-europe.com/weee.

Tik Europos Sąjungai ir EEE (Norvegijai, Islandijai ir Lichtenšteinui)

Šis ženklas reiškia, kad gaminio negalima išmesti su buitinėmis atliekomis, kaip yra nustatyta Direktyvoje (2012/19/ES) ir nacionaliniuose teisė aktuose dėl EEĮ atliekų tvarkymo. Šį gaminį reikia atiduoti į tam skirtą surinkimo punktą, pvz., pagal patvirtintą keitimo sistemą, kai perkamas panašus gaminys, arba į

elektros ir elektroninės įrangos (EEĮ) atliekų perdirbimo punktą. Netinkamas tokios rūšies atliekų tvarkymas dėl elektros ir elektroninėje įrangoje esančių pavojingų medžiagų gali pakenkti aplinkai ir žmonių sveikatai. Padėdami užtikrinti tinkamą šio gaminio šalinimo tvarką, kartu prisidėsite prie veiksmingo gamtos išteklių naudojimo. Jei reikia daugiau informacijos, kaip šalinti tokias atliekas, kad jos būtų toliau perdirbamos, kreipkitės į savo miesto valdžios institucijas, atliekų tvarkymo organizacijas, patvirtintų EEĮ atliekų sistemų arba jūsų buitinių atliekų tvarkymo įstaigų atstovus. Išsamesnės informacijos apie EEĮ atliekų grąžinimo ir perdirbimo tvarką galite rasti apsilankę tinklalapyje www.canon-europe.com/weee.

Samo za Evropsko unijo in EGP (Norveška, Islandija in Lihtenštajn)

Ta simbol pomeni, da tega izdelka v skladu z direktivo OEEO (2012/19/EU) in državno zakonodajo ne smete odvreči v gospodinjske odpadke. Ta izdelek morate odložiti na ustrezno zbiralno mesto, na primer pri pooblaščenem prodajalcu, ko kupite podoben nov izdelek ali na zbiralno mesto za recikliranje električne in elektronske opreme. Neprimerno ravnanje s takšnimi odpadki lahko negativno vpliva na okolje in človekovo zdravje zaradi nevarnih snovi, ki so povezane z električno in elektronsko opremo. S pravilno odstranitvijo izdelka hkrati prispevate tudi k učinkoviti porabi naravnih virov. Če želite več informacij o tem, kje lahko odložite odpadno opremo za recikliranje, pokličite občinski urad, komunalno podjetje ali službo, ki skrbi za odstranjevanje odpadkov, ali si oglejte načrt OEEO. Če želite več informacij o vračanju in recikliranju izdelkov v skladu z direktivo OEEO, obiščite www.canon-europe.com/weee.

Само за Европейския съюз и ЕИП (Норвегия, Исландия и Лихтенщайн)

Този символ показва, че този продукт не трябва да се изхвърля заедно с битовите отпадъци, съгласно Директивата за ИУЕЕО (2012/19/ЕС) и Вашето национално законодателство. Този продукт трябва да бъде предаден в предназначен за целта пункт за събиране, например на база размяна, когато купувате нов подобен продукт, или в одобрен събирателен пункт за рециклиране на излязло от употреба електрическо и електронно оборудване (ИУЕЕО). Неправилното третиране на този тип отпадъци може да доведе до евентуални отрицателни последствия за околната среда и човешкото здраве поради потенциално опасните вещества, които обикновено са свързани с ЕЕО. В същото време Вашето съдействие за правилното изхвърляне на този продукт ще допринесе за ефективното използване на природните ресурси. Повече информация относно местата, където може да предавате излязло от употреба оборудване за рециклиране, може да получите от местните власти, от органа, отговорен за отпадъците и от одобрена система за излязло от употреба ЕЕО или от Вашата местна служба за битови отпадъци. За повече информация относно връщането и рециклирането на продукти от излязло от употреба ЕЕО посетете www.canon-europe.com/weee.

Doar pentru Uniunea Europeană şi EEA (Norvegia, Islanda şi Liechtenstein)

Acest simbol indică faptul că acest produs nu trebuie aruncat o dată cu reziduurile menajere, în conformitate cu Directiva DEEE (Directiva privind deşeurile de echipamente electrice şi electronice) (2012/19/UE) şi legile naţionale. Acest produs trebuie transportat la un punct de colectare special, de exemplu un centru care preia produsele vechi atunci când achiziţionaţi un produs nou similar, sau la un punct de colectare autorizat pentru reciclarea deşeurilor provenite de la echipamentele electrice şi electronice (EEE). Mânuirea necorespunzătoare a acestor tipuri de deşeuri poate avea un impact negativ asupra mediului înconjurător şi sănătăţii indivizilor, din cauza substanţelor potenţial nocive care sunt în general asociate cu EEE. În acelaşi timp, cooperarea dvs. la reciclarea corectă a acestui produs va contribui la utilizarea efectivă a resurselor naturale. Pentru mai multe informaţii privind locurile de reciclare a deşeurilor provenite de la echipamente, contactaţi biroul primăriei locale, autoritatea responsabilă cu colectarea deşeurilor, schema DEEE aprobată sau serviciul de colectare a deşeurilor menajere. Pentru mai multe informaţii privind returnarea şi reciclarea produselor DEEE, vizitaţi www.canon-europe.com/weee.

Samo za Europsku uniju i EEZ (Norveška, Island i Lihtenštajn)

Ovaj simbol pokazuje da se ovaj proizvod ne smije odlagati s kućnim otpadom sukladno WEEE Direktivi (2012/19/EC) i vašem nacionalnom zakonu. Ovaj proizvod je potrebno predati na posebno mjesto za sakupljanje otpada, npr. na ovlašteno mjesto gdje možete zamijeniti staro za novo ukoliko kupujete novi sličan proizvod ili na ovlašteno mjesto za sakupljanje rabljene električne i elektroničke opreme (EEE) za recikliranje. Nepropisno rukovanje ovom vrstom otpada može imati negativan učinak na okolinu i zdravlje ljudi zbog supstanci koje su potencijalno opasne za zdravlje, a općenito se povezuju s EEE. Istovremeno, vaša će suradnja kroz propisno odlaganje ovog proizvoda doprinijeti efektivnoj uporabi prirodnih resursa. Za više informacija o tome gdje možete odložiti svoj otpad za recikliranje obratite se vašem lokalnom gradskom uredu, komunalnoj službi, odobrenom WEEE programu ili službi za odlaganje kućnog otpada. Ostale informacije o vraćanju i recikliranju WEEE proizvoda potražite na www.canon-europe.com/weee.

Korisnici u Srbiji

Ovaj simbol označava da ovaj proizvod ne sme da se odlaže sa ostalim kućnim otpadom, u skladu sa WEEE Direktivom (2012/19/EU) i nacionalnim zakonima. Ovaj proizvod treba predati određenom centru za prikupljanje, npr. na osnovi "jedan-za-jedan" kada kupujete sličan novi proizvod, ili ovlašćenom centru za prikupljanje za reciklažu istrošene električne i elektronske opreme (EEE). Nepravilno rukovanje ovom

vrstom otpada može da ima moguće negativne posledice po životnu sredinu i ljudsko zdravlje usled potencijalno opasnih materijala koji se uglavnom vezuju za EEE. U isto vreme, vaša saradnja na ispravnom odlaganju ovog proizvoda će doprineti efikasnom korišćenju prirodnih resursa. Za više informacija o tome gde možete da predate vašu staru opremu radi recikliranje, vas molimo, da kontaktirate lokalne gradske vlasti, komunalne službe, odobreni plan reciklaže ili Gradsku čistoću. Za više informacija o vraćanju i recikliranju WEEE proizvoda, posetite stranicu www.canon-europe.com/weee.

Handling Precautions

- Canceling Print Jobs
- Legal Restrictions on Scanning/Copying
- Transporting Your Printer
- When Repairing, Lending, or Disposing of the Printer
- Keeping Print Quality High

Legal Restrictions on Scanning/Copying

Scanning, printing, copying, or modifying copies of the following may be punishable under law.

This list is non-exhaustive. When in doubt, check with a local legal representative.

- Paper money
- Money orders
- Certificates of deposit
- Postage stamps (canceled or uncanceled)
- Identification badges or insignia
- Selective service or draft papers
- Checks or drafts issued by governmental agencies
- Motor vehicle licenses and certificates of title
- Traveler's checks
- Food stamps
- Passports
- Immigration papers
- Internal revenue stamps (canceled or uncanceled)
- Bonds or other certificates of indebtedness
- Stock certificates
- Copyrighted works or works of art, without the owner's consent

Transporting Your Printer

When relocating the printer for changing your living place or repairing it, make sure of the following.

Important

- Pack the printer in a sturdy box so that it is placed with its bottom facing down, using sufficient protective material to ensure safe transport.
- With the print head and ink tank left installed in the printer, press the **ON** button to turn off the power. This allows the printer to automatically cap the print head, thus preventing it from drying.
- After packing, do not tilt the box containing the printer or turn it on its side or upside down. Doing so may cause the ink to leak during transport and cause damage to the printer.
- When a shipping agent is handling transport of the printer, have its box marked "THIS SIDE UP" to keep the printer with its bottom facing down. Mark also with "FRAGILE" or "HANDLE WITH CARE".

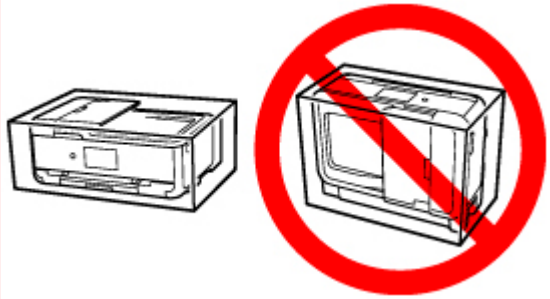

1. Turn the printer off.

2. Check that **ON** lamp is off and unplug power cord.

   Important

   - Do not unplug the printer while the **ON** lamp is lit or flashing, as it may cause malfunction or damage to the printer, making the printer unable to print.

3. Retract paper output tray and paper output support, and then close the operation panel.

4. Retract the paper support and then close the rear tray cover.

5. Unplug the printer cable from the computer and from the printer, then unplug the power cord from the printer.

6. Use adhesive tape to secure all the covers on the printer to keep them from opening during transportation. Then pack the printer in the plastic bag.

7. Attach the protective material to the printer when packing the printer in the box.

When Repairing, Lending, or Disposing of the Printer

If you have entered personal data, passwords and/or other security settings on the printer, such information may be stored in the printer.

When sending the printer for repair, lending or transferring the printer to another person, or disposing of the printer, please be sure to follow the steps below in order to delete such information and prevent third parties from accessing it.

- Select (Setup) on HOME screen and select **Device settings** > **Reset settings** > **Reset all** > **Yes**.

Keeping Print Quality High

The key to printing with the optimal printing quality is to prevent the print head from drying or clogging. Always observe the following rules for optimal printing quality.

Note

- Depending on the type of paper, ink may blur if you trace the printed area with a highlight pen or paint-stick, or bleed if water or sweat comes in contact with the printed area.

Never unplug the power cord until the power is turned off!

If you press the **ON** button to turn off the power, the printer caps the print head (nozzles) automatically to prevent from drying. If you unplug the power cord from the wall outlet before the **ON** lamp is turned off, the print head will not be capped properly and this will cause drying or clogging.

When unplugging the power cord, check that the **ON** lamp is not lit.

Print periodically!

Just as the tip of a felt pen becomes dry and unusable if it has not been used for a long time, even if it is capped, the print head too, may become dried or clogged if the printer has not been used for a long time. We recommend you to use the printer at least once a month.

Main Components and Their Use

- Main Components
- Power Supply
- Using the Operation Panel

Main Components

- Front View
- Rear View
- Inside View
- Operation Panel

Front View

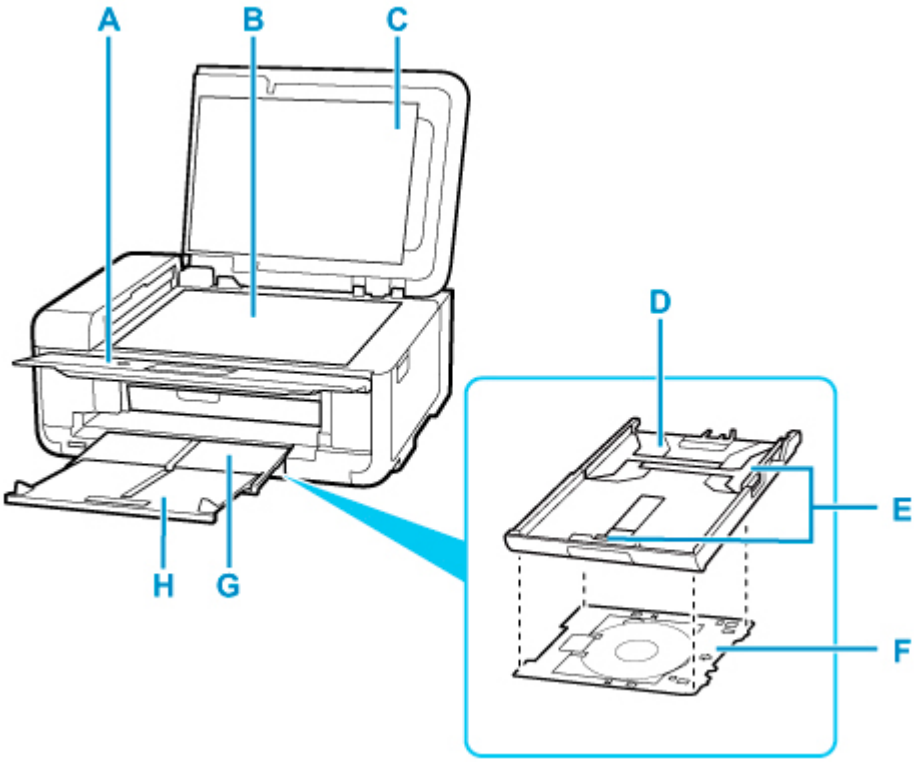

A: Operation Panel

Use to change the settings of the printer or to operate it. Before printing starts, this automatically opens.

Operation Panel

B: Platen

Load an original here.

C: Document Cover

Open to load an original on the platen.

D: Cassette

Load A4, B5, A5, or Letter-sized plain paper into the cassette, and insert it into the printer.

Loading Paper in the Cassette

E: Paper Guides

Align with right/left/front sides of the paper stack.

F: Multi-purpose Tray

Use when printing on printable discs.

G: Paper Output Tray

Printed paper is ejected. Pull out it before printing.

H: Paper Output Support

Extend to support ejected paper.

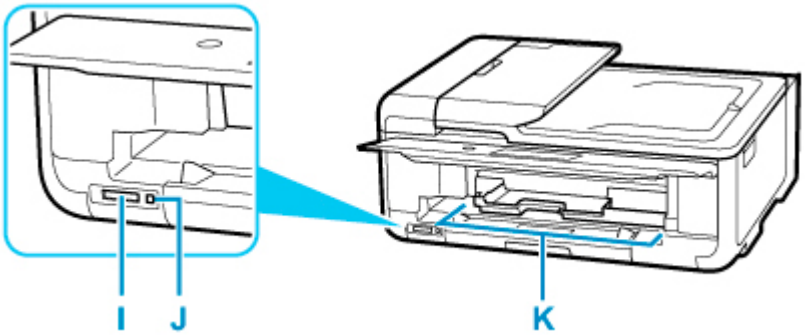

I: Card Slot

Insert a memory card.

- Before Inserting the Memory Card

J: Access lamp

Lights or flashes to indicate the memory card status.

- Inserting the Memory Card

K: Multi-purpose Tray Guide

Place the multi-purpose tray here.

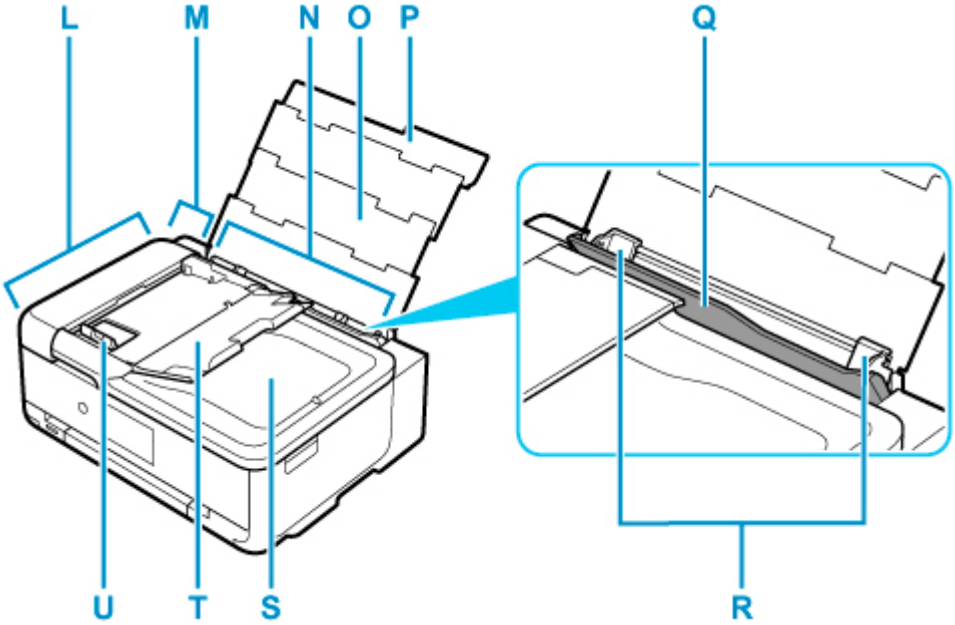

L: ADF (Auto Document Feeder)

Load a document here. The documents loaded in the document tray are scanned automatically one sheet at a time.

- Loading Documents in the ADF (Auto Document Feeder)

M: Document Feeder Cover

Open when clearing jammed documents.

N: Rear Tray

Load paper here. Two or more sheets of the same size and type of paper can be loaded at the same time, and fed automatically one sheet at a time.

- Loading Paper in the Rear Tray

Loading Envelopes in Rear Tray

O: Paper Support

Extend to load paper in the rear tray.

P: Rear Tray Cover

Open to load paper in the rear tray.

Q: Feed Slot Cover

Prevents anything from falling into the feed slot.

Open it to slide the paper guides, and close it before printing.

R: Paper Guides

Align with both sides of the paper stack.

S: Document Output Slot

Documents scanned from the ADF are delivered here.

T: Document Tray

Open to load a document in the ADF. You can load two or more sheets of document of the same size and thickness. Load the document with the side you want to scan facing up.

U: Document Guide

Adjust this guide to match the width of document in the ADF.

Rear View

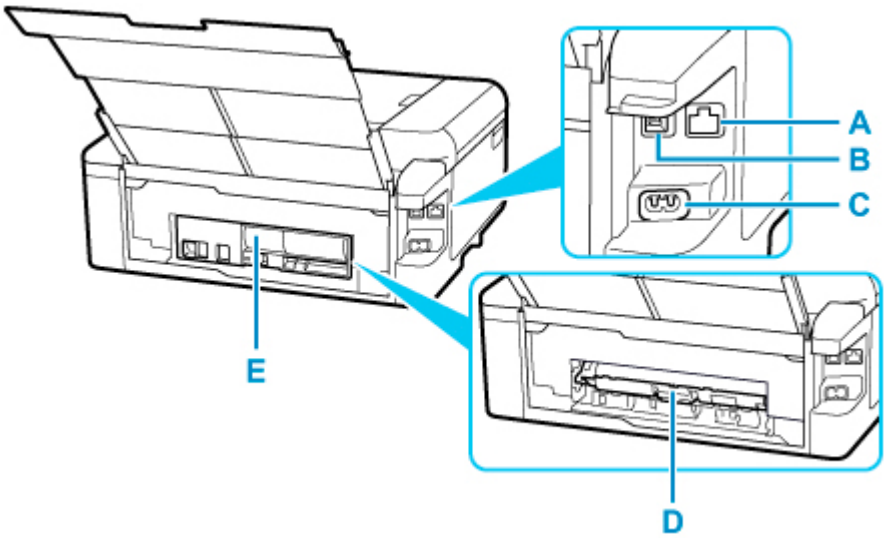

A: Wired LAN Connector

Plug in the LAN cable to connect the printer to a LAN.

B: USB Port

Plug in the USB cable to connect the printer with a computer.

C: Power Cord Connector

Plug in the supplied power cord.

D: Transport Unit Cover

Open when removing jammed paper.

E: Rear Cover

Detach when removing jammed paper.

Important

- Do not touch the metal casing.
- Do not plug in or unplug the USB cable while the printer is printing or scanning with the computer. This can cause trouble.

Inside View

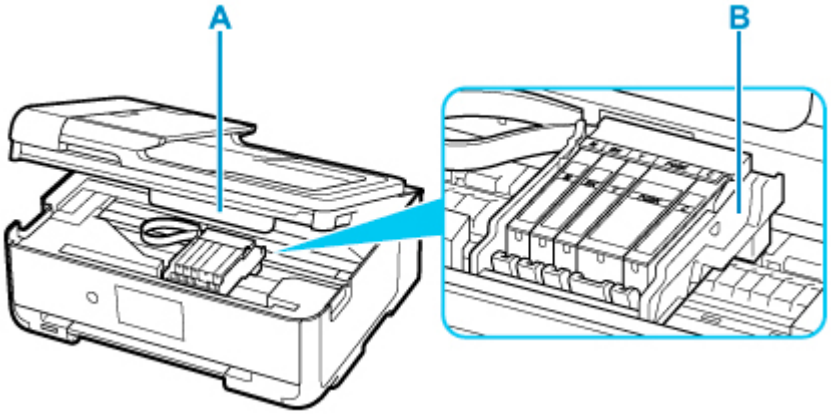

A: Scanning Unit / Cover

Scans originals. Also, lift and open it to replace an ink tank or to remove jammed paper inside the printer.

B: Print Head Holder

The print head is pre-installed.

Note

- For details on replacing an ink tank, see Replacing Ink Tanks.

Operation Panel

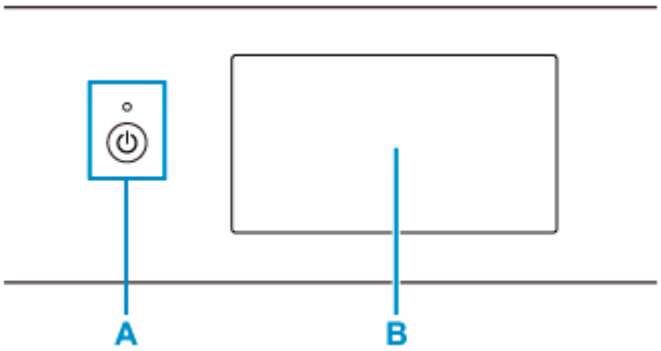

A: ON button/ON lamp

Turns the power on or off. Lights after flashing when the power is turned on. Before turning on the power, make sure that the document cover is closed.

B: Touch Screen

Displays messages, menu items, and the operational status. Directly touch the screen lightly with your finger tip to select a menu item or displayed button. You can also preview photos on a memory card before printing.

Basic Operation of the touch screen

Power Supply

- Checking that Power Is On
- Turning the Printer On and Off
- Checking the Power Plug/Power Cord
- Unplugging the Printer

Checking that Power Is On

The **ON** lamp is lit when the printer is turned on.

Even if the touch screen is off, if the **ON** lamp is lit, the printer is on.

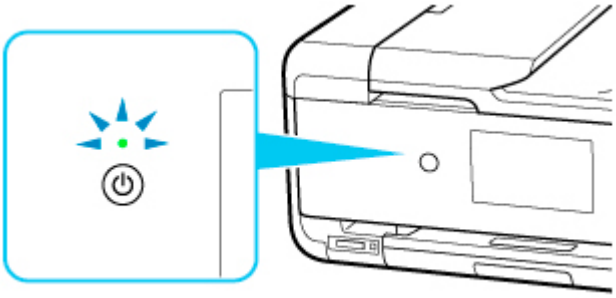

Note

- It may take a while for the printer to start printing immediately after you turn on the printer.
- The touch screen display will turn off if the printer is not operated for about 10 minutes. To restore the display, touch the touch screen. The print operation from a computer can also restore the display.

Turning the Printer On and Off

Turning on the printer

1. Press the **ON** button to turn on the printer.

   The **ON** lamp flashes and then remains lit.

   Confirming that the Power Is On

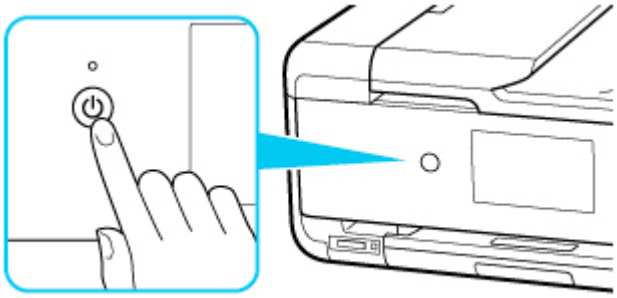

Note

- It may take a while for the printer to start printing immediately after you turn on the printer.
- If an error message is displayed on the touch screen, see An Error Occurs.
- You can set the printer to automatically turn on when a print or scan operation is performed from a computer connected by USB cable or wireless network. This feature is set to off by default.

  From the printer

  ECO settings

  From the computer

  - For Windows:

    Managing the Printer Power

  - For macOS:

    Managing the Printer Power

Turning off the printer

1. Press the **ON** button to turn off the printer.

   When the **ON** lamp stops flashing, the printer is turned off.

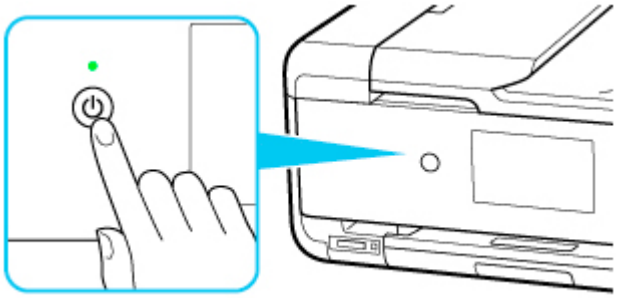

Important

- When you unplug the power cord after turning off the printer, be sure to confirm that the **ON** lamp is off.

Note

- When pressing the **ON** button, a confirmation screen to retract the paper output tray on the touch screen. If you want to retract the paper output tray, select **Yes**.
- You can set the printer to automatically turn off when no operations are performed or no print jobs are sent to the printer for a certain interval. This feature is set to on by default.

  From the printer

  ■ ECO settings

  From the computer

  - For Windows:

    ■ Managing the Printer Power

  - For macOS:

    ■ Managing the Printer Power

Checking the Power Plug/Power Cord

Unplug the power cord once a month to confirm that the power plug/power cord does not have anything unusual described below.

- The power plug/power cord is hot.
- The power plug/power cord is rusty.
- The power plug/power cord is bent.
- The power plug/power cord is worn.
- The power plug/power cord is split.

⚠ Caution

- If you find anything unusual with the power plug/power cord described above, unplug the power cord and call for service. Using the printer with one of the unusual conditions above may cause a fire or an electric shock.

Unplugging the Printer

To unplug the power cord, follow the procedure below.

Important

- When you unplug the power cord, press the **ON** button, then confirm that the **ON** lamp is off.
  Unplugging the power cord while the **ON** lamp is lit or flashing may cause drying or clogging of the print head and print quality may be reduced.

1. Press the **ON** button to turn the printer off.

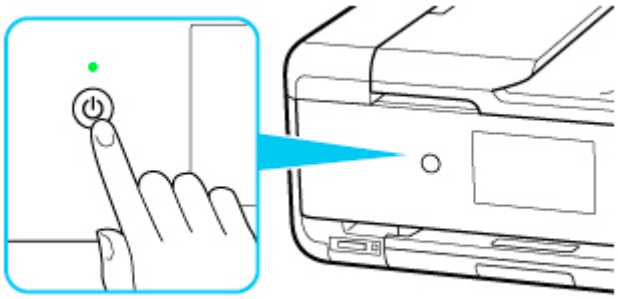

2. Confirm that the **ON** lamp is off.

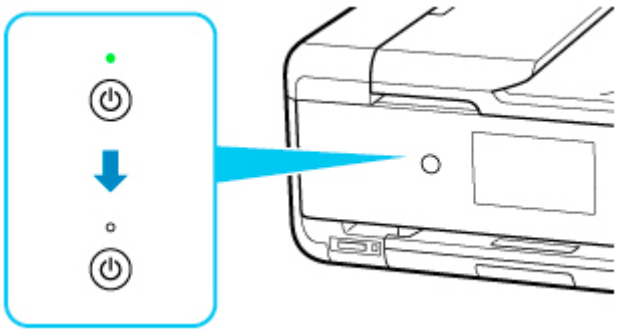

3. Unplug the power cord.

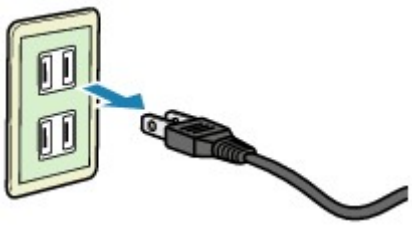

The specification of the power cord differs depending on the country or region of use.

Using the Operation Panel

The operation panel consists of the **ON** button (A) and touch screen (B).

Touch the HOME screen on the touch screen with your finger tip to select menus for copying, scanning, and other functions.

Operations on the HOME Screen

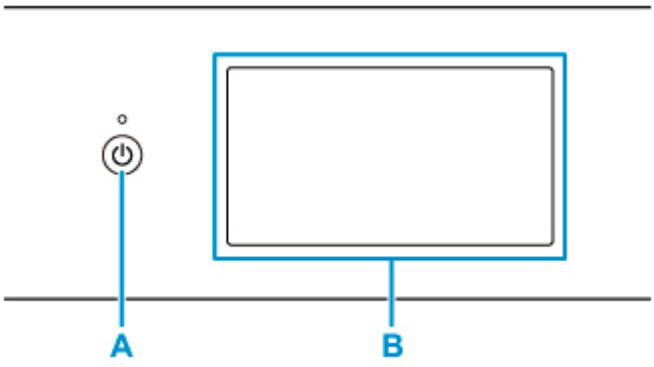

A: ON button

B: Touch Screen

Basic Operation of the touch screen
Icons on Touch Screen

Basic Operation of the touch screen

Touch the touch screen lightly with your finger tip or move your finger to access various functions or settings.

Important

- When operating the touch screen, make sure to avoid the followings, which may cause the printer to malfunction or damage the printer.
  - Strongly pressing the touch screen.
  - Pressing the touch screen with other than your finger (especially with sharpened tips, such as on ballpoint pens, pencils, or nails).
  - Touching the touch screen with wet or dirty hands.
  - Placing any objects on the touch screen.
- Do not attach a protective sheet on the touch screen. Removing it may damage the touch screen.

Tap

Touch lightly with your finger tip and immediately release.

Use to select an item or photo on the screen.

Touch

Touch lightly with your finger tip.

To move forward (or go back) menus or photos continuously, keep touching the forward (or back) mark.

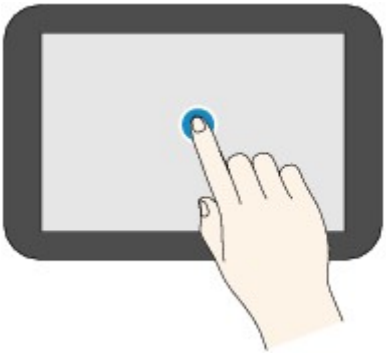

Flick

Flick your finger on the screen up, down, left, or right.

Use to switch menus or move forward or backward through photos.

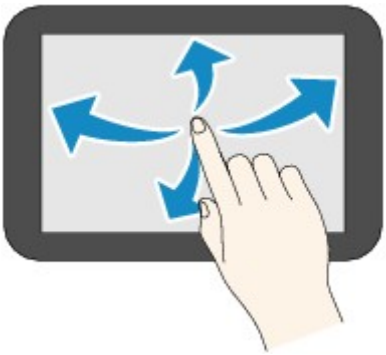

Drag

While lightly touching the screen, move your finger up, down, left, or right.

Use to view lists of items or move sliders.

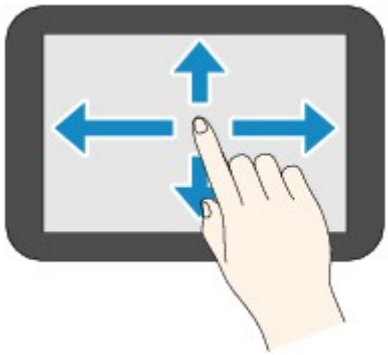

Operations on the HOME Screen

Display the menu screen or the settings screen from the HOME screen.

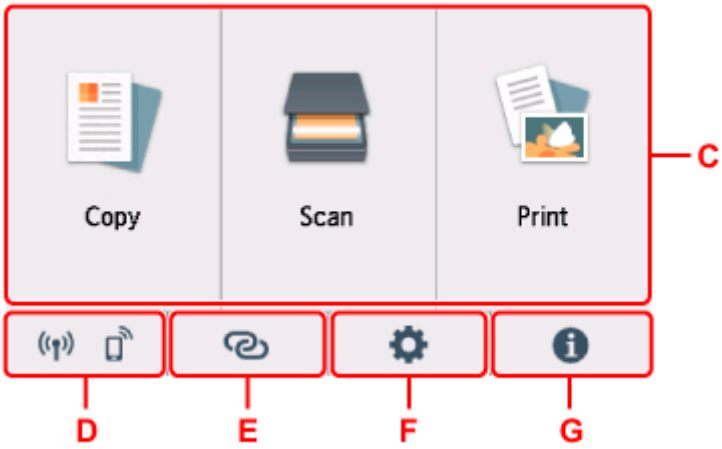

C: Basic menu

Select to copy or scan using the operation panel. After selecting a basic menu, the particular menus are displayed.

D: Network

Displays the current network status. Select to display the basic network information or to change the network settings.

The icon differs depending on the network of use or the network status.

Wi-Fi is enabled and the printer is connected to the wireless router.

Note

- Depending on the signal state, the icon will change.

  (Signal strength: 81 % or more): You can use the printer over Wi-Fi without any problems.

  (Signal strength: 51 % or more): The problem such as the printer cannot print may occur according to the network status. We recommend placing the printer near the wireless router.

(Signal strength: 50 % or less): The problem such as the printer cannot print may occur. Place the printer near the wireless router.

Wi-Fi is enabled but the printer is not connected to the wireless router.

Wired LAN is enabled.

Wireless Direct is enabled.

Wi-Fi and Wired LAN are disabled.

E: Wireless connect

Select to connect the printer to a smartphone/tablet over Wi-Fi through Easy wireless connect or via Bluetooth.

Tap this button to display a confirmation screen for starting a connection. Touch and hold this button to switch to the standby mode for Easy wireless connect or Bluetooth connection.

- Easy wireless connect
- Bluetooth settings

F: Setup

Displays the printer's setting menus or the maintenance menus.

When there is an update notification or information from PIXMA/MAXIFY Cloud Link, **NEW** appears on this button.

- Firmware update
- Using PIXMA/MAXIFY Cloud Link

G: Hint

Displays quick guides about such procedures as loading paper and troubleshooting and such information as estimated ink level and system information.

Icons on Touch Screen

While operating on the touch screen, some icons are displayed on the touch screen.

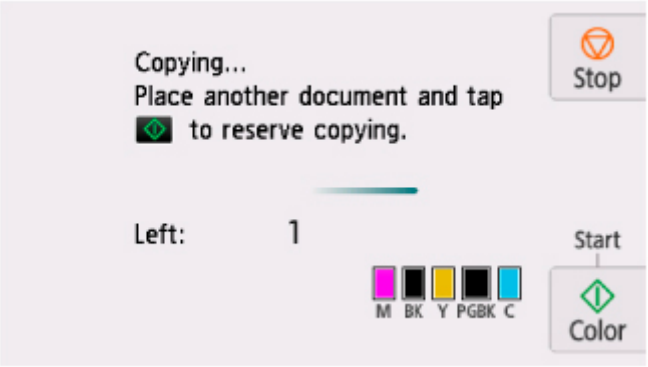

(HOME)

Displays the HOME screen.

(Back)

Returns the touch screen to the previous screen.

Black

Starts black & white copying, scanning, etc.

Color

Starts color copying, scanning, etc.

Stop

Cancels operation when print, copy, or scan job is in progress.

Changing Settings

- Changing Printer Settings from Your Computer (Windows)
- Changing Printer Settings from Your Computer (macOS)
- Changing Settings from Operation Panel

Changing Printer Settings from Your Computer (macOS)

- Managing the Printer Power
- Changing the Printer Operation Mode

Managing the Printer Power

Printer power supply is operated from Remote UI.

Energy saving settings

Energy saving settings allow you to set **Auto power off** and **Auto power on**.

Auto power off is the function wherein the printer automatically turns itself off, when data is not sent or the printer remains inactive for a certain period.
The **Auto power on** function automatically turns on the printer when data is received.

1. Selecting **Device settings** from Remote UI

2. Click **Energy saving settings**

3. Complete the following settings:

   Auto power off
   Specify the time from the list. Printer automatically turns itself off, when data is not sent within the specified time or the printer has remained inactive.

   Auto power on
   When you check this check box, the printer automatically turns itself on when data is sent.

4. Apply the settings

   Click **OK**.
   The printer will operate with the changed settings hereafter.

Changing the Printer Operation Mode

If necessary, switch between various modes of printer operation.

1. Check whether the printer is on and select **Device settings** from Remote UI

2. If necessary, complete the following settings:

   Print settings - Prevent paper abrasion

   The printer can increase the gap between the print head and the paper during high-density printing to prevent paper abrasion.
   Check this check box to prevent paper abrasion.

   Custom settings - Detect paper setting mismatch

   If the check box is deselected, at the time of printing from PC, you can continue to print without the message display even if the paper settings set in the Print dialog differs from the paper information registered to the printer.

   Ink drying wait time

   You can set the length of the printer rest time until printing of the next page begins. The wait time becomes longer as the value set in the list increases, and shorter as the value decreases.
   If the paper gets stained because the next page is ejected before the ink on the printed page dries, increase the ink drying wait time.
   Reducing the ink drying wait time speeds up printing.

3. Apply the settings

   Click **OK**.

   The printer operates with the modified settings hereafter.

Changing Settings from Operation Panel

- Changing Settings from Operation Panel
- Setting Items on Operation Panel
- Print settings
- LAN settings
- Bluetooth settings
- PictBridge settings
- Other device settings
- Language selection
- Firmware update
- Reset setting
- Feed settings
- Web service setup
- ECO settings
- Quiet setting
- System information

Changing Settings from Operation Panel

This section describes the procedure to change the settings in the **Device settings** screen, taking the steps to specify **Extended copy amount** as an example.

1. Check that printer is turned on.

2. Select (Setup) on the HOME screen.

   Using the Operation Panel

3. Select **Device settings**.

   The **Device settings** screen is displayed.

4. Select a setting item to adjust.

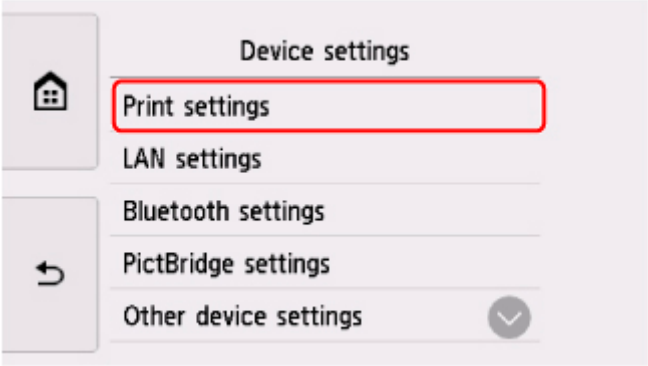

   The setting screen for the selected item is displayed.

5. Select a setting item.

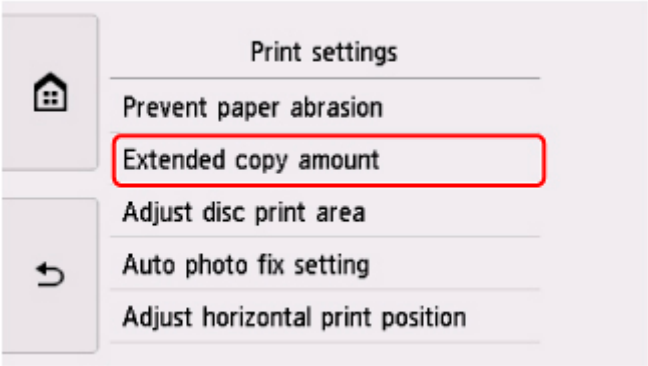

6. Select a setting to specify.

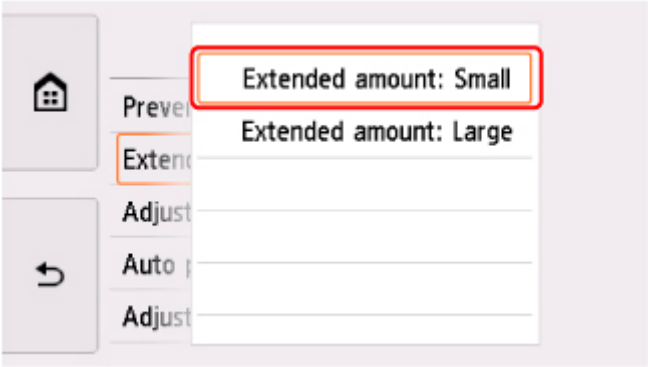

For more on setting items on the operation panel:

- Setting Items on Operation Panel

Setting Items on Operation Panel

Items for Printer

- Other device settings
- Language selection
- Web service setup
- ECO settings
- Quiet setting

Items for Paper/Printing

- Print settings
- Bluetooth settings
- PictBridge settings
- Feed settings

Items for Maintenance/Management

- LAN settings
- Firmware update
- Reset setting
- System information

Print settings

- **Prevent paper abrasion**

  Use this setting only if the print surface becomes smudged.

  Important

  - Be sure to set this back to **OFF** after printing since it may result in lower printing speed or lower print quality.

- **Extended copy amount**

  Selects the amount of image that extends off the paper when printing in borderless (full).

  Slight cropping may occur at the edges since the copied image is enlarged to fill the whole page. You can change the width to be cropped from the borders of the original image as needed.

  Important

  - This setting can be applied under the following conditions:
    - Performing borderless copying
    - **Borderless** is selected for **Border** when copying printed photos

  Note

  - If printouts contain margins even though you are printing in Borderless, specifying **Extended amount: Large** for this setting may help solve the problem.

- **Adjust disc print area**

  You can adjust the disc printing area if the image is not aligned with the printable disc. You can adjust the printing area in increments of 0.003 inches/0.1 mm between -0.03 inches/-0.9 mm and +0.03 inches/+0.9 mm.

- **Auto photo fix setting**

  When **ON** is selected, you can select whether to print photos using the Exif information recorded in the image files when **Default*** or **On** is selected in printing with a PictBridge (Wi-Fi) compliant device.

  * When **Default** is selected for the print setting on the PictBridge (Wi-Fi) compliant device, select **Auto photo fix** for **Photo fix** in **PictBridge settings**.

- **Adjust horizontal print position**

  Adjusts the print position when the left/right margins are not aligned.

  You can adjust the left/right margins in increments of 0.01 inch/0.1 mm between -0.12 inch/-3 mm and +0.12 inch/+3 mm centered on the horizontal center of the paper.

  Important

  - For Letter-sized or Legal-sized paper, you can adjust the left/right margins between -0.06 inch/-1.5 mm and +0.06 inch/+1.5 mm even if you specify the value over 0.06 inch/1.5 mm.

LAN settings

- Wi-Fi
- Wireless Direct
- Wired LAN

Wi-Fi

When **Wi-Fi** is selected in the **LAN settings** screen, the network settings information of the printer when it is connected by Wi-Fi appears in the **Wi-Fi setting list** screen.

To print the LAN settings, select **Print details** in the **LAN settings** screen and select **Yes**.

- Printing Network Settings

Important

- The network settings printout contains important information about your network. Handle it with care.

The following setting items are displayed. (Some setting items are not displayed depending on the printer settings.)

Items	Setting
Connection	Enabled (connected)/Enabled (disconnected)/Disabled
Network name (SSID)	XXXXXXXXXXXXXXXX XXXXXXXXXXXXXXXX (up to 32 characters)
Wi-Fi security	Inactive/WEP(64bit)/WEP(128bit)/WPA-PSK(TKIP)/WPA-PSK(AES)/ WPA2-PSK(TKIP)/WPA2-PSK(AES)
Signal strength (%)	XXX
IPv4 address	XXX. XXX. XXX. XXX (12 characters)
IPv4 subnet mask	XXX. XXX. XXX. XXX (12 characters)
IPv4 default gateway	XXX. XXX. XXX. XXX (12 characters)
IPv6 link-local address	XXXX: XXXX: XXXX: XXXX: XXXX: XXXX: XXXX: XXXX (32 characters)
MAC address (Wi-Fi)	XXX. XXX. XXX. XXX (12 characters)
Printer name	XXXXXXXXXXXXXXX (up to 15 characters)
Bonjour service name	XXXXXXXXXXXXX XXXXXXXXXXXXX XXXXXXXXXXXXX XXXXXXXXXXXXX (up to 52 characters)

("XX" represents alphanumeric characters.)

If **Settings** is selected in the **Wi-Fi setting list** screen, the following settings are available.

- **Enable/disable Wi-Fi**

  Enables/disables Wi-Fi.

- **Wi-Fi setup**

  Selects the setup method for Wi-Fi connection.

  - **Easy wireless connect**

    Select if you specify the settings of the access point information to the printer directly from a device (e.g. smartphone, or tablet) without operating the wireless router. Follow the on-screen instructions of the connecting device for the setup procedure.

  - **Manual connect**

    Select when you perform settings for Wi-Fi manually using the operation panel of the printer.

  - **WPS (Push button method)**

    Select when you perform settings for Wi-Fi using a wireless router supporting a Wi-Fi Protected Setup (WPS) push button method. Follow the on-screen instructions during setup.

  - **Other connection types**

    - **Manual connect (adv.)**

      Select when you perform settings for Wi-Fi manually. You can specify multiple WEP keys.

    - **WPS (PIN code method)**

      Select when you perform settings for Wi-Fi using a wireless router supporting a Wi-Fi Protected Setup (WPS) PIN code method. Follow the on-screen instructions during setup.

- **Advanced setup**

  For details on each setting item:

  Advanced setup

Wireless Direct

When **Wireless Direct** is selected in the **LAN settings** screen, the network settings information of the printer when it is connected by the Wireless Direct appears in the **Wireless Direct setting list** screen.

To print the LAN settings, select **Print details** in the **LAN settings** screen and select **Yes**.

Printing Network Settings

Important

- The network settings printout contains important information about your network. Handle it with care.

The following setting items are displayed. (Some setting items are not displayed depending on the printer settings.)

Note

- To show or hide the password, select **Show password**/**Hide password** in the **Wireless Direct setting list** screen.

Items	Setting
Connection	Enabled (connected)/Disabled

Network (SSID)/device name	DIRECT-XXXX-TS9500series
Password	XXXXXXXXXX (10 characters)
Wi-Fi security	WPA2-PSK(AES)
No. of devices connected now	XX/XX
IPv4 address	XXX. XXX. XXX. XXX (12 characters)
IPv4 subnet mask	XXX. XXX. XXX. XXX (12 characters)
IPv4 default gateway	XXX. XXX. XXX. XXX (12 characters)
IPv6 link-local address	XXXX: XXXX: XXXX: XXXX: XXXX: XXXX: XXXX: XXXX (32 characters)
MAC address (Wi-Fi)	XXX. XXX. XXX. XXX (12 characters)
Printer name	XXXXXXXXXXXXXXX (up to 15 characters)
Bonjour service name	XXXXXXXXXXXXX XXXXXXXXXXXXX XXXXXXXXXXXXX XXXXXXXXXXXXX (up to 52 characters)

("XX" represents alphanumeric characters.)

If **Settings** is selected in the **Wireless Direct setting list** screen, the following settings are available.

- **Enable/disable Wireless Direct**

  Enables/disables Wireless Direct.

- **Change SSID/device name**

  Changes the identifier (SSID/the printer's name displayed on a Wi-Fi Direct compatible device) for Wireless Direct.

- **Change password**

  Changes the password for Wireless Direct.

- **Connection request confirmation**

  Selecting **Yes** displays the confirmation screen when a Wi-Fi Direct compatible device is connecting the printer.

- **Advanced setup**

  For details on each setting item:

  Advanced setup

Wired LAN

When **Wired LAN** is selected in the **LAN settings** screen, the network settings information of the printer when it is connected by wired LAN appears in the **Wired LAN setting list** screen.

To print the LAN settings, select **Print details** in the **LAN settings** screen and select **Yes**.

Printing Network Settings

Important

- The network settings printout contains important information about your network. Handle it with care.

The following setting items are displayed. (Some setting items are not displayed depending on the printer settings.)

Items	Setting
Connection	Enabled (connected)/Enabled (disconnected)/Disabled
IPv4 address	XXX. XXX. XXX. XXX (12 characters)
IPv4 subnet mask	XXX. XXX. XXX. XXX (12 characters)
IPv4 default gateway	XXX. XXX. XXX. XXX (12 characters)
IPv6 link-local address	XXXX: XXXX: XXXX: XXXX: XXXX: XXXX: XXXX: XXXX (32 characters)
MAC address (Wired LAN)	XX:XX:XX:XX:XX:XX (12 characters)
Printer name	XXXXXXXXXXXXXXX (up to 15 characters)
Bonjour service name	XXXXXXXXXXXXX XXXXXXXXXXXXX XXXXXXXXXXXXX XXXXXXXXXXXXX (up to 52 characters)

("XX" represents alphanumeric characters.)

If **Settings** is selected in the **Wired LAN setting list** screen, the following settings are available.

- **Enable/disable Wired LAN**

  Enables/disables wired LAN.

- **Advanced setup**

  For details on each setting item:

  Advanced setup

Advanced setup

- **Set printer name**

  Specifies the printer name. You can use up to 15 characters for the name.

  ### Note

  - You cannot use the same printer name as that already used for other LAN connected devices.
  - You cannot use a hyphen for the initial or last character of the printer name.

- **TCP/IP settings**

  Performs IPv4 or IPv6 setting.

- **WSD setting**

  Setting items when you use WSD (one of the network protocols supported in Windows).

- **Enable/disable WSD**

  Selects whether WSD is enabled or disabled.

  Note

  - When this setting is enabled, the printer icon is displayed on the Network Explorer in Windows.

- **Optimize inbound WSD**

  Selecting **Enable** allows you to receive the WSD printing data faster.

- **WSD scan from this device**

  Selecting **Enable** allows you to transfer the scanned data to the computer using WSD. To transfer the scanned data, tap **Color**.

  Note

  - When you forward the scanned data to the computer searched using WSD, you cannot select the document type.

- **Timeout setting**

  Specifies the timeout length.

- **Bonjour settings**

  Setting items for LAN using Bonjour for macOS.

  - **Enable/disable Bonjour**

    Selecting **Enable** allows you to use Bonjour to perform the network settings.

  - **Service name**

    Specifies the Bonjour service name. You can use up to 48 characters for the name.

    Note

    - You cannot use the same service name as that already used for other LAN connected devices.

- **LPR protocol setting**

  Enables/disables the LPR setting.

- **RAW protocol**

  Enables/disables RAW printing.

- **LLMNR**

  Enables/disables LLMNR (Link-Local Multicast Name Resolution). Selecting **Enable** allows the printer to detect printer's IP address from the printer name without a DNS server.

- **IPP settings**

  Selecting **Enable** allows you to print via the network with the IPP protocol.

- **PictBridge communication**

  Setting items for printing from a PictBridge (Wi-Fi) compliant device.

- **Enable/disable communication**

  Selecting **Enable** allows you to print from a PictBridge (Wi-Fi) compliant device.

- **Timeout setting**

  Specifies the timeout length.

- **Wired LAN DRX setting**

  Selecting **Enable** allows you to activate discontinuous reception when the printer is connected to a device compatible with wired LAN.

- **IPsec settings**

  Selecting **Enable** allows you to specify the IPsec security.

Other device settings

- **Date display format**

  Changes the display format of dates when printed.

  Note

  - When **ON** is selected for **Print date** on the print settings screen in printing from a memory card, the date is printed in the date display format you selected.

    Setting Items for Photo Printing Using Operation Panel

- **Read/write attribute**

  Selects whether to allow data to be written onto memory cards from a computer.

  Important

  - Remove the memory card before changing this setting.

    Setting Up Card Slot as Memory Card Drive of Computer

  - If you set this setting to **Writable from USB PC**, you cannot print photos on a memory card using the operation panel of the printer. After you finish operation of the memory card dedicated drive, be sure to set it back to **Not writable from PC**. When you turn off the printer, **Writable from USB PC** will be canceled and the setting is returned to **Not writable from PC** when you turn on the printer next time.
  - When **Writable from USB PC** is selected, the auto power off setting is inactive.

    For more on the auto power off setting:

    ECO settings

- **Sound control**

  Selects the volume.

  - **Keypad volume**

    Selects the beep volume when tapping the touch screen or the buttons on the operation panel.

  - **Alarm volume**

    Selects the alarm volume.

- **Energy saving settings**

  Allows you to turn on/off the printer automatically to save electricity.

  - **Auto power off**

    Specifies the length of time to turn off the printer automatically when no operation is made or no printing data is sent to the printer.

  - **Auto power on**

    Selecting **ON** enables the printer to turn on automatically when a scanning command from a computer or printing data is sent to the printer.

Note

- You can also select this setting by selecting (Setup) on the HOME screen, selecting **ECO**, and then selecting **Energy saving settings**.

  ECO settings

- **Document removal reminder**

  Selects whether the printer will display the reminder screen in case you forget to remove the original from the platen after scanning.

Important

- Depending on the type of original or the state of the document cover, forgetting to remove the original may not be detected.

Language selection

Changes the language for the messages and menus on the touch screen.

Firmware update

You can update the firmware of the printer, check the firmware version, or perform settings of a notification screen, a DNS server and a proxy server.

Important

- When you use this function, make sure the printer is connected to the Internet.

Note

- Only **Check current version** is available when **Disable** is selected for **Enable/disable Wi-Fi** of **Wi-Fi** and also for **Enable/disable Wired LAN** of **Wired LAN** in **LAN settings**.

- **Install update**

  Performs the firmware update of the printer. If you select **Yes**, the firmware update starts. Follow the on-screen instructions to perform update.

  #### Note

  - If the firmware update is not complete, check the following and take an appropriate action.
    - Check the network settings.
    - If **Cannot connect to the server.** is displayed on the touch screen, select **OK** and try again after a while.

- **Check current version**

  You can check the current firmware version.

- **Update notification setting**

  When **Yes** is selected and the firmware update is available, the screen to inform you of the firmware update is displayed on the touch screen.

- **DNS server setup**

  Performs settings for a DNS server. Select **Auto setup** or **Manual setup**. If you select **Manual setup**, follow the display on the touch screen to perform settings.

- **Proxy server setup**

  Performs settings for a proxy server. Follow the display on the touch screen to perform settings.

Reset setting

You can set the settings back to the default.

- **Web service setup only**

  Sets the Web service settings back to the default.

- **LAN settings only**

  Sets the LAN settings back to the default.

- **Settings only**

  Sets the settings such as the paper size or media type back to the default.

- **Reset all**

  Sets all settings you made to the printer back to the default. The administrator password specified by Remote UI or IJ Network Device Setup Utility reverts to the default setting.

  Note

  - You cannot set the following setting items back to the default:
    - The language displayed on the touch screen
    - The current position of the print head
    - CSR (Certificate Signing Request) for encryption method (SSL/TLS) setting

Feed settings

By registering the paper size and the media type loaded on the rear tray or in the cassette, you can prevent the printer from misprinting by displaying the message before printing starts when the paper size or the media type of the loaded paper differs from the print settings.

For details:

- Paper Settings

Note

- For more on the proper combination of paper settings you can specify by the printer driver (Windows) or on the touch screen:
  - Paper Settings on the Printer Driver and the Printer (Media Type)
  - Paper Settings on the Printer Driver and the Printer (Paper Size)

- **Rear tray paper settings**

  Registers the paper size and the media type you load on the rear tray.

- **Cassette paper settings**

  Registers the paper size and the media type you load in the cassette.

  #### Note

  - Plain paper can only be loaded in the cassette.

- **Detect paper setting mismatch**

  If you select **Enable**, the printer detects whether the paper size and the media type are identical with those registered in **Feed settings**. If printing starts with the settings that do not match, an error message is displayed on the touch screen.

  #### Note

  - When **Disable** is selected, the settings in **Feed settings** is disabled.

Web service setup

Select this setting item from **Web service setup** in (Setup).

- **Web service usage registration/Web service usage cancellation**

  Registers/Deletes Web service usage to use the printer device information to/from PIXMA/MAXIFY Cloud Link.

- **Web service connection setup**

  The following setting items are available.

  - **IJ Cloud Printing Center setup**

    Registers/Deletes the printer to/from Canon Inkjet Cloud Printing Center.

  - **Check Web service setup**

- **DNS server setup**

  Performs settings for a DNS server. Select **Auto setup** or **Manual setup**. If you select **Manual setup**, follow the display on the touch screen to perform settings.

- **Proxy server setup**

  Performs settings for a proxy server. Follow the display on the touch screen to perform settings.

ECO settings

This setting allows you to use automatic duplex printing as a default to save paper and to turn on/off the printer automatically to save electricity.

- Using Power Saving Function
- Using Duplex Printing

Using Power Saving Function

Follow the procedure below to use power saving function.

1. Check that printer is turned on.

2. Select (Setup) on the HOME screen.

   - Using the Operation Panel

3. Select **ECO**.

4. Select **Energy saving settings**.

5. Check on-screen instructions and select **Next**.

6. Specify settings as necessary.

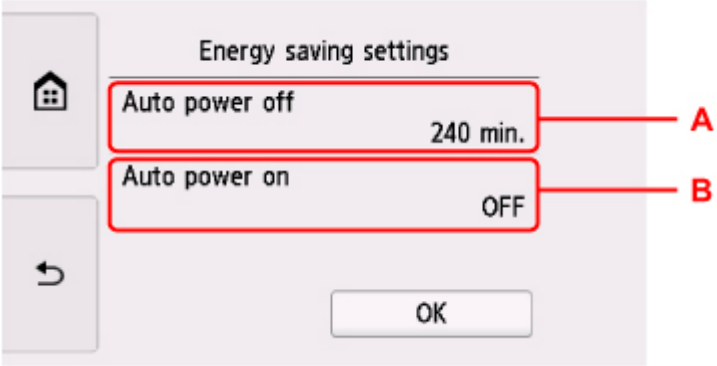

A: Specify the length of time to turn the printer off automatically when no operation is made or no printing data is sent to the printer.

B: Selecting **ON** enables the printer to turn on automatically when a scanning command from a computer or printing data is sent to the printer.

Using Duplex Printing

Follow the procedure below to use duplex printing.

1. Check that printer is turned on.

2. Select (Setup) on the HOME screen.

   Using the Operation Panel

3. Select **ECO**.

4. Select **Two-sided printing setting**.

5. Specify settings as necessary.

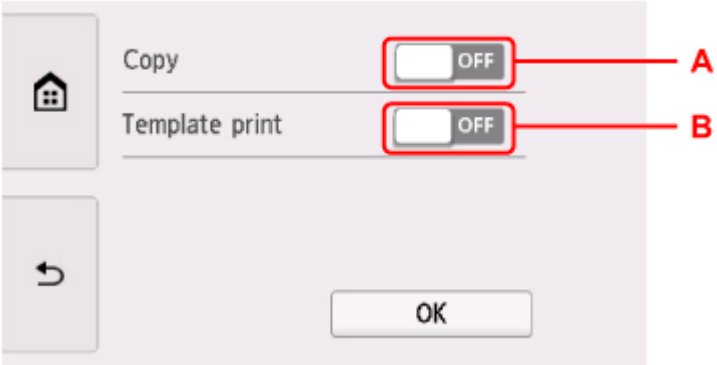

A: Select two-sided copying as a default.

B: Select two-sided printing of template forms on the printer as a default.

Note

- When duplex printing is selected, the icon is displayed on the setting items for duplex printing on each print settings screen.

Quiet setting

Enables this function on the printer if you want to reduce the operating noise, such as when printing at night.

Follow the procedure below to perform setting.

1. Check that printer is turned on.

2. Select (Setup) on the HOME screen.

   Using the Operation Panel

3. Select **Quiet setting**.

4. Select **Use quiet mode**.

   The confirmation screen is displayed and the icon appears as the **Quiet setting** menu icon.

   Activate this setting to reduce the operating noise while printing is in progress.

Important

- Operating speed is reduced compared to when **Do not use quiet mode** is selected.
- This function may not be so effective depending on the printer's setting. Furthermore, certain noise, such as when the printer is preparing for printing, is not reduced.

Note

- You can set the quiet mode from the operation panel of the printer or the printer driver. No matter how you set the quiet mode, the mode is applied when you perform operations from the operation panel of the printer or printing and scanning from the computer.
- For Windows, you can set the quiet mode from ScanGear (scanner driver).

System information

To display this menu, select **System information** in (Hint).

- **Current version**

  Displays the current firmware version.

- **Printer name**

  Displays the printer name currently specified.

- **Serial number**

  Displays the printer serial number.

- **MAC address (Wi-Fi)**

  Displays the MAC address for Wi-Fi.

- **MAC address (Wired LAN)**

  Displays the MAC address for wired LAN.

- **Root cert. thumbprint (SHA-1)**

  Shows the root certification thumbprint (SHA-1) of the printer.

  Note

  - If the password is set to the printer, the password may be requested.

- **Root cert. thumbprint (SHA-256)**

  Shows the root certification thumbprint (SHA-256) of the printer.

  Note

  - If the password is set to the printer, the password may be requested.

Specifications

General Specifications

Printing resolution (dpi)	4800* (horizontal) x 1200 (vertical) * Ink droplets can be placed with a pitch of 1/4800 inch at minimum.
Interface	**USB Port:** Hi-Speed USB * **LAN Port:** Wired LAN: 100BASE-TX / 10BASE-T Wi-Fi: IEEE802.11n / IEEE802.11g / IEEE802.11b **Card Slot:** Yes * A computer that complies with Hi-Speed USB standard is required. Since the Hi-Speed USB interface is fully upwardly compatible with USB 1.1, it can be used at USB 1.1. USB and LAN can be used at the same time. Wi-Fi and wired LAN cannot be used at the same time.
Print width	11.74 inches/298.0 mm (for Borderless Printing: 12.00 inches/304.8 mm)
Printable area	**Borderless printing:** Top/Bottom/Left/Right margin: 0.0 inch (0.0 mm) **Standard printing:** • Top margin: ◦ Square 3.5" x 3.5" 9 x 9 cm, Square 4" x 4" 10 x 10 cm: 0.20 inch (5.0 mm) ◦ Square 5" x 5" 13 x 13 cm: 0.24 inch (6.0 mm) ◦ Other sizes: 0.12 inch (3.0 mm) • Bottom margin: ◦ Square 3.5" x 3.5" 9 x 9 cm, Square 4" x 4" 10 x 10 cm: 0.20 inch (5.0 mm) ◦ Square 5" x 5" 13 x 13 cm: 0.24 inch (6.0 mm) ◦ Other sizes: 0.20 inch (5.0 mm) • Left margin: ◦ Letter/Legal: 0.26 inch (6.4 mm) ◦ Square 3.5" x 3.5" 9 x 9 cm, Square 4" x 4" 10 x 10 cm: 0.20 inch (5.0 mm) ◦ Square 5" x 5" 13 x 13 cm: 0.24 inch (6.0 mm) ◦ Other sizes: 0.14 inch (3.4 mm)

	• Right margin: ◦ Letter/Legal: 0.25 inch (6.3 mm) ◦ Square 3.5" x 3.5" 9 x 9 cm, Square 4" x 4" 10 x 10 cm: 0.20 inch (5.0 mm) ◦ Square 5" x 5" 13 x 13 cm: 0.24 inch (6.0 mm) ◦ Other sizes: 0.14 inch (3.4 mm) * For printable area of envelope, see below. ■ Envelopes **Auto duplex printing:** • Top margin: 0.20 inch (5.0 mm) • Bottom margin: 0.20 inch (5.0 mm) • Left margin: ◦ Letter: 0.26 inch (6.4 mm) ◦ Other sizes: 0.14 inch (3.4 mm) • Right margin: ◦ Letter: 0.25 inch (6.3 mm) ◦ Other sizes: 0.14 inch (3.4 mm)
Operating environment	**Temperature:** 41 to 95 °F (5 to 35 °C) **Humidity:** 10 to 90 % RH (no condensation) * The performance of the printer may be reduced under certain temperature and humidity conditions. Recommended conditions: **Temperature:** 59 to 86 °F (15 to 30 °C) **Humidity:** 10 to 80 % RH (no condensation) * For the temperature and humidity conditions of papers such as photo paper, refer to the paper's packaging or the supplied instructions.
Storage environment	**Temperature:** 32 to 104 °F (0 to 40 °C) **Humidity:** 5 to 95 % RH (no condensation)
Power supply	AC 100-240 V, 50/60 Hz (The supplied power cord is only for the country or region you purchased.)
Power consumption	**Printing (Copy):** 14 W or less *1 **Standby (minimum):** 1.2 W or less *1*2 **OFF:** 0.3 W or less *1 USB connection to PC *2 The wait time for standby cannot be changed.
External dimensions	Approx. 18.5 (W) x 14.5 (D) x 7.6 (H) inches Approx. 468 (W) x 366 (D) x 193 (H) mm * With the Cassette and trays retracted.

Weight	Approx. 21.3 lb (Approx. 9.7 kg) * With the Print Head and ink tanks installed.
Print Head/Ink	Total 4096 nozzles (PgBK 1024 nozzles, Y/DyeBK each 512 nozzles, C/M each 1024 nozzles)
ADF capacity	**A4 or Letter size:** max. 20 sheets (20 lb/75 g /m^2 paper), up to 0.08 inch/2 mm in height **Legal size:** max. 5 sheets (20 lb/75 g /m^2 paper), up to 0.02 inch/0.5 mm in height

Copy Specifications

Multiple copy	max. 99 pages
Intensity adjustment	9 positions, Auto intensity (AE copy)
Reduction / Enlargement	25 % - 400 % (1 % unit)

Scan Specifications

Scanner driver	**Windows:** TWAIN 1.9 Specification, WIA
Maximum scanning size	A4/Letter, 8.5" x 11.7"/216 x 297 mm
Optical resolution (horizontal x vertical)	1200 x 2400 dpi * * Optical Resolution represents the maximum sampling rate based on ISO 14473.
Gradation (Input / Output)	**Gray:** 16 bit/8 bit **Color:** RGB each 16 bit/8 bit

Network Specifications

Communication protocol	TCP/IP
Wired LAN	**Supported Standards:** IEEE802.3u (100BASE-TX) / IEEE802.3 (10BASE-T) **Transfer speed:** 10 M/100 Mbps (auto switching)
Wi-Fi	**Supported Standards:** IEEE802.11n / IEEE802.11g / IEEE802.11b **Frequency bandwidth:** 2.4 GHz **Channel:** 1-11 or 1-13 * Frequency bandwidth and available channels differ depending on country or region. **Communication distance:** Indoors 164 feet/50 m * Effective range varies depending on the installation environment and location. **Security:**

	WEP (64/128 bits) WPA-PSK (TKIP/AES) WPA2-PSK (TKIP/AES) **Setup:** WPS (Push button configuration/PIN code method) WCN (WCN-NET) Easy wireless connect **Other Features:** Administration password

Minimum System Requirements

Conform to the operating system's requirements when higher than those given here.

Windows

Operating System	Windows 10, Windows 8.1, Windows 7 SP1 Note: Operation can only be guaranteed on a PC with pre-installed Windows 7 or later.
Hard Disk Space	3.0 GB or more Note: For bundled software installation. The necessary amount of hard disk space may be changed without notice.
Display	XGA 1024 x 768

macOS

Operating System	OS X 10.10.5 - OS X 10.11, macOS 10.12 - macOS 10.13
Hard Disk Space	1.5 GB or more Note: For bundled software installation. The necessary amount of hard disk space may be changed without notice.
Display	XGA 1024 x 768

Other Supported OS

iOS, Android, Windows 10 Mobile, Chrome OS Some functions may not be available with the supported OS. Refer to the Canon web site for details.

Mobile Printing Capability

Apple AirPrint
PIXMA Cloud Link

Windows 10 Mobile Print
Mopria Print Service

- Internet connection or CD-ROM drive is required to install the software for Windows.
- Internet connection is required to use Easy-WebPrint EX and/or Easy-PhotoPrint Editor and all the user's guide.
- Easy-WebPrint EX: Internet Explorer 8, 9, 10 and 11 (for Windows) is required.
- Windows: Some functions may not be available with Windows Media Center.
- Windows: The TWAIN driver (ScanGear) is based on the TWAIN 1.9 Specification and requires the Data Source Manager bundled with the operating system.
- macOS: For macOS, an internet connection is required during software installation.
- In an in-house network environment, the 5222 port must be open. Contact the network administrator for details.

Information in this manual is subject to change without notice.

Information about Paper

- **Supported Media Types**
  - Paper Load Limit
- **Unsupported Media Types**
- **Handling Paper**

Supported Media Types

For best results, choose paper designed for how you are printing. A variety of paper for documents as well as photos or illustrations is available from Canon. Use genuine Canon paper to print important photos, when possible.

Media Types

Genuine Canon paper

Note

- For warnings on use of the non-printable side, see each product's usage information.
- For details on page sizes and media types, access the Canon website.
- Genuine Canon paper is not available in some countries or regions. Note that in the United States, Canon paper is not sold by model number. Instead, purchase paper by name.

Paper for printing documents:

- Canon Red Label Superior <WOP111>
- Canon Océ Office Colour Paper <SAT213>
- High Resolution Paper <HR-101N>*1

Paper for printing photos:

- Photo Paper Pro Platinum <PT-101>
- Glossy Photo Paper "Everyday Use" <GP-501>
- Photo Paper Glossy <GP-701>
- Photo Paper Plus Glossy II <PP-201/PP-301>
- Photo Paper Pro Luster <LU-101>
- Photo Paper Plus Semi-gloss <SG-201>
- Matte Photo Paper <MP-101>

Paper for making original goods:

- Restickable Photo Paper <RP-101>
- Removable Photo Stickers <PS-308R>
- Magnetic Photo Paper <MG-101/PS-508>
- Printable Nail Stickers <NL-101>*1 *2

Paper other than genuine Canon paper

- Plain Paper (including recycled paper)
- Envelopes*1
- T-Shirt Transfers*1

- Greeting Card*1
- Card Stock*1

*1 Printing to this paper from the operation panel or from a PictBridge (Wi-Fi) compliant device is not supported.
*2 When printing, mount a special adapter on the supplied multi-purpose tray.

Paper Load Limit
Paper Settings on the Printer Driver and the Printer (Media Type) (Windows)

Note

- When printing photos saved on a PictBridge (Wi-Fi) compliant device, you must specify the page size and media type.

Printing from Digital Camera

Page Sizes

You can use the following page sizes.

Note

- Page sizes and media types the printer supports differ depending on the OS you are using.

Standard sizes:

- Letter
- Legal
- 11"x17"(28x43cm)
- A5
- A4
- A3
- B5
- B4
- KG/4"x6"(10x15)
- 5"x7"(13x18cm)
- 7"x10"(18x25cm)
- 8"x10"(20x25cm)
- 10"x12"(25x30cm)
- L(89x127mm)
- 2L(127x178mm)
- Square 3.5"
- Square 4"
- Square 5"

- 12"x12"(30x30cm)
- Hagaki
- Hagaki 2
- Envelope Com 10
- Envelope DL
- Nagagata 3
- Nagagata 4
- Yougata 4
- Yougata 6
- Card 2.17"x3.58"

Special sizes

Special page sizes must be within the following limits:

- rear tray
  - Minimum size: 2.17 x 3.51 inches (55.0 x 89.0 mm)

    Maximum size: 12.00 x 26.61 inches (304.8 x 676.0 mm)
- cassette
  - Minimum size: 5.83 x 8.27 inches (148.0 x 210.0 mm)

    Maximum size: 8.50 x 11.69 inches (215.9 x 297.0 mm)

Paper Weight

You can use paper in the following weight range.

- 17 to 28 lb (64 to 105 g /m^2) (plain paper other than genuine Canon paper)

Paper Load Limit

Genuine Canon Paper

Paper for printing documents:

Media Name <Model No.>	Rear Tray	Cassette	Paper Output Tray
Canon Red Label Superior <WOP111>	Approx. 100 sheets	Approx. 100 sheets	Approx. 50 sheets
Canon Océ Office Colour Paper <SAT213>	Approx. 80 sheets	Approx. 80 sheets	Approx. 50 sheets
High Resolution Paper <HR-101N>*1	Approx. 80 sheets (B4: 50 sheets, A3: 20 sheets)	N/A	Approx. 20 sheets

Paper for printing photos:

Media Name <Model No.>	Rear Tray	Paper Output Tray
Photo Paper Pro Platinum <PT-101>*2	A4, Letter, A3, 8" x 10" (20 x 25 cm): 10 sheets 4" x 6" (10 x 15 cm): 20 sheets 10" x 12" (25 x 30 cm): 1 sheet	*3
Glossy Photo Paper "Everyday Use" <GP-501>*2	A4, Letter, A3: 10 sheets 4" x 6" (10 x 15 cm): 20 sheets	*3
Photo Paper Glossy <GP-701>*2	A4, Letter, A3: 10 sheets 4" x 6" (10 x 15 cm): 20 sheets	*3
Photo Paper Plus Glossy II <PP-201/PP-301>*2	A4, Letter, A3, 5" x 7" (13 x 18 cm), 8" x 10" (20 x 25 cm): 10 sheets 4" x 6" (10 x 15 cm), Square 3.5" x 3.5" 9 x 9 cm, Square 4" x 4" 10 x 10 cm, Square 5" x 5" 13 x 13 cm: 20 sheets	*3
Photo Paper Pro Luster <LU-101>*2	A4, Letter, A3: 10 sheets	*3
Photo Paper Plus Semi-gloss <SG-201>*2	A4, Letter, A3, 5" x 7" (13 x 18 cm), 8" x 10" (20 x 25 cm): 10 sheets 4" x 6" (10 x 15 cm): 20 sheets 10" x 12" (25 x 30 cm): 1 sheet	*3
Matte Photo Paper <MP-101>	A4, Letter, A3: 10 sheets	*3

	4" x 6" (10 x 15 cm): 20 sheets	

Paper for making original goods:

Media Name <Model No.>	Rear Tray	Paper Output Tray
Restickable Photo Paper <RP-101> Removable Photo Stickers <PS-308R>	1 sheet	*3
Magnetic Photo Paper <MG-101/PS-508>	1 sheet	*3

Paper other than Genuine Canon Paper

Common Name	Rear Tray	Cassette	Paper Output Tray
Plain Paper (including recycled paper)*1	Approx. 100 sheets (Legal, 11" x 17" (28 x 43 cm), A3, B4: 50 sheets)	Approx. 100 sheets	Approx. 50 sheets (Legal, 11" x 17" (28 x 43 cm), A3, B4: 10 sheets)
Envelopes	10 envelopes	N/A	*3
T-Shirt Transfers	A4: 1 sheet	N/A	*3
Greeting Card	Letter, 7" x 10" (18 x 25 cm): 1 sheet	N/A	*3
Card Stock	A4, Letter, 12" x 12" (30 x 30 cm): 1 sheet	N/A	*3

*1 Normal feeding at maximum capacity may not be possible with some types of paper, or under very high or low temperature or humidity. In this case, load half the amount of paper or less.
*2 Feeding from a loaded stack of paper may leave marks on the printed side or prevent efficient feeding. In this case, load one sheet at a time.
*3 For best results in continuous printing, remove printed paper or envelopes from the paper output tray to avoid smearing or discoloration.

Unsupported Media Types

Do not use the following types of paper. Using such paper will cause not only unsatisfactory results, but also the printer to jam or malfunction.

- Folded, curled, or wrinkled paper
- Damp paper
- Paper that is too thin (weighing less than 17 lb (64 g /m^2))
- Paper that is too thick (plain paper weighing more than 28 lb (105 g /m^2), except for Canon genuine paper)
- Paper thinner than a postcard, including plain paper or notepad paper cut to a small size (when printing on paper smaller than A5)
- Picture postcards
- Postcards
- Envelopes with a double flap
- Envelopes with an embossed or treated surface
- Envelopes whose gummed flaps are already moistened and adhesive
- Any type of paper with holes
- Paper that is not rectangular
- Paper bound with staples or glue
- Paper with an adhesive surface on the back such as label seal
- Paper decorated with glitter, etc.

Handling Paper

- Be careful not to rub or scratch the surfaces of any types of paper when handling.
- Hold the paper as closely as possible to its edges and try not to touch the printing surface. The print quality may be degraded if the printing surface is smudged with sweat or oil that comes from your hands.
- Do not touch the printed surface until the ink is dried. Even when the ink is dried, be careful not to touch the printed surface as much as possible when handling. Due to the nature of the pigment ink, the ink on the printed surface may be removed when being rubbed or scratched.
- Take out only the necessary number of paper from the package, just before printing.
- To avoid curling, when you do not print, put unused paper back into the package and keep it on a level surface. And also, store it avoiding heat, humidity, and direct sunlight.

Printing

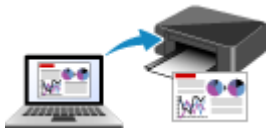

Printing from Computer

Printing from Smartphone/Tablet

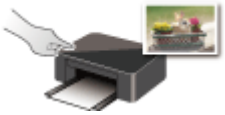

Printing Using Operation Panel

Printing from Digital Camera

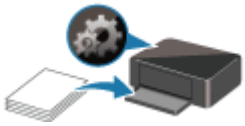

Paper Settings

Printing from Computer

- Printing from Application Software (Windows Printer Driver)
- Printing from Application Software (macOS AirPrint)
- Printing Using Canon Application Software
- Printing Using a Web Service
- Printing from Chrome OS

Printing from Application Software (macOS AirPrint)

- Printing Basic
- Printing on Postcards
- Adding Printer
- How to Open Printer Settings Screen
- Displaying the Printing Status Screen
- Deleting the Undesired Print Job
- Removing Printer That Is No Longer Required from List of Printers

Printing

This printer is compatible with the macOS standard printing system (AirPrint).
You can start printing right away after connecting this printer to your Mac without installing any special software.

Checking Your Environment

First, check your environment.

- AirPrint Operation Environment
  Mac running the latest version of OS
- Requirement
  The Mac and the printer must be connected by one of the following methods:
  - Connected to the same network over a **LAN**
  - Connected directly without wireless router (Direct Connection)
  - Connected by USB

Print from a Mac

1. Check that printer is turned on

   Note

   - If **Auto power on** is enabled, printer automatically turns itself on when receiving a print job.

2. Load paper in printer

3. Select paper size and paper type from printer

   Register the set paper size and paper type on the printer operation panel.
   For instructions, see "Paper Settings."

4. Start printing from your application software

   The Print dialog opens.

5. Select printer

   Select your model from the **Printer** list in the Print dialog.

Note

- Click **Show Details** to switch the setup window to the detailed display.

6. Check print settings

Set items such as **Paper Size** to the appropriate size, as well as **Feed From** and **Media Type** from **Media & Quality** of the pop-up menu.
Select **Auto Select** for **Media Type**.
Remove the **Two-Sided** check mark if you are not printing on both sides of the paper.

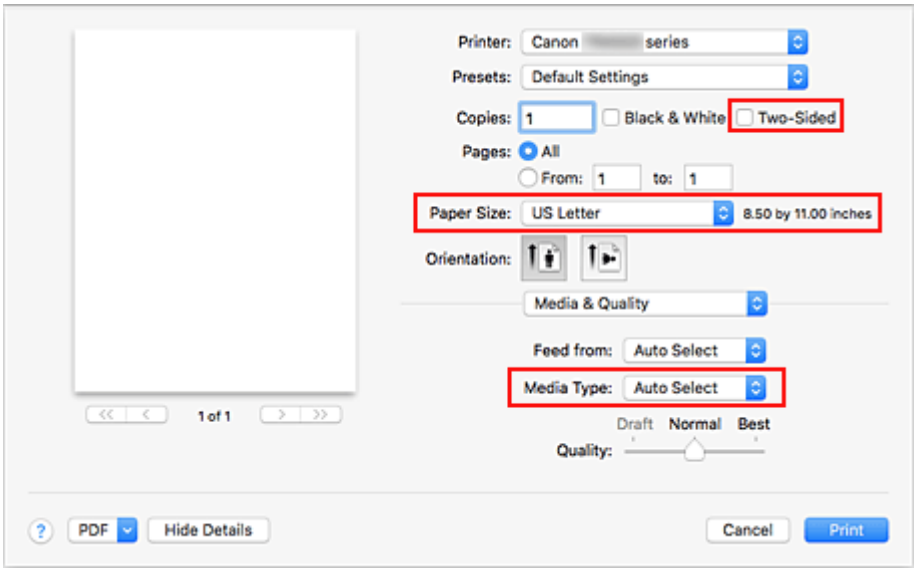

Important

- An error may occur if the paper size set in the print dialog is different from the paper size set on the printer. Select the correct items on the print dialog and the printer that correspond to the paper being printed.

- If printing in **A4**, **A5**, **JIS B5**, or **US Letter**, set the desired feed position (**Main Tray** or **Rear Tray**) from **Feed From** of the print dialog. If **Auto Select** is selected in **Feed From**, the feed position differs depending on **Media Type**. If **Media Type** is set to plain paper, it is fed from the cassette (main tray). If set to other types of paper, it is fed from the rear tray.
- If printing paper such as photo paper and postcards that cannot be printed on both sides, uncheck the **Two-Sided** checkbox.

Note

- Use the Print dialog to set general print settings such as the layout and the print sequence. For information about print settings, refer to macOS help.

7. Click **Print**

   The printer prints according to the specified settings.

Note

- It can take the Wi-Fi a few minutes to get connected after the printer turns on. Print after checking that the printer is connected to the network.
- You cannot print if Bonjour settings of printer are disabled. Check **LAN** settings of printer and enable Bonjour settings.
- Refer to "Cannot Print Using AirPrint" for printing problems.
- The display of the settings screen may differ depending on the application software you are using.

Printing of Envelopes

For printing on the envelope from Mac, refer to the following.

Print result image	Orientation of print data	Orientation of loading envelope
	The print data is rotated by 180 degrees against the print result image.	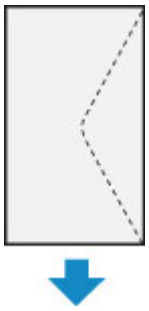 Load the envelope in vertically with the address side facing up so that the folded flap of the envelope will be faced down on the right side.

Printing on Postcards

This section describes the procedure for printing on postcards.

1. Load postcards in printer

2. Select paper size and paper type from the printer

   Register **Hagaki** for paper size from the printer operation panel.
   Also, register **Hagaki**, **IJ Hagaki**, or **Hagaki K** for paper type, according to your purpose. When you print on the address side, register **Hagaki**.

3. Select **Paper Size** and **Media Type** from the print dialog

   Select **Postcard** or **Postcard Borderless** for **Paper Size** from the print dialog. When you print on the address side, select **Postcard**.
   Select **Auto Select** for **Media Type** from the print dialog.

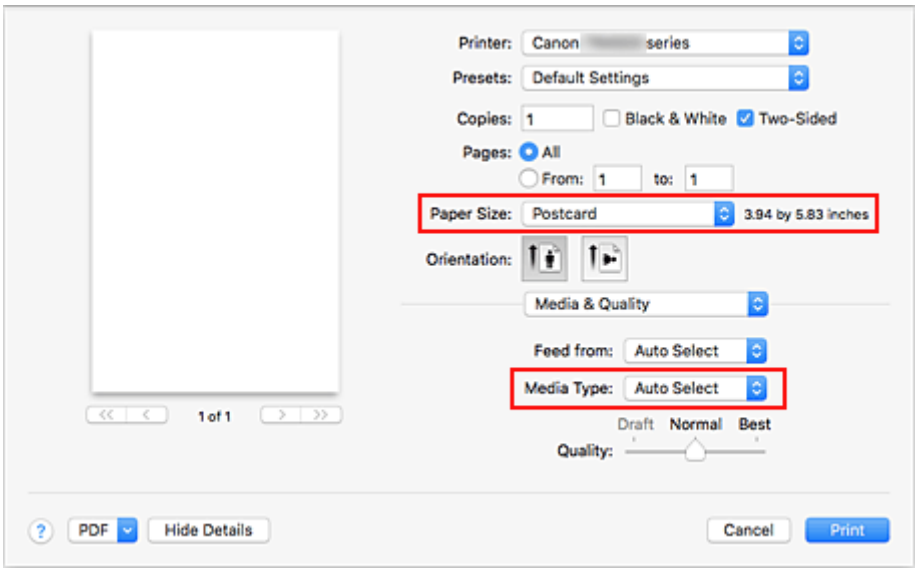

Important

- This printer cannot print on postcards that have photos or stickers attached.

4. Uncheck **Two-Sided**

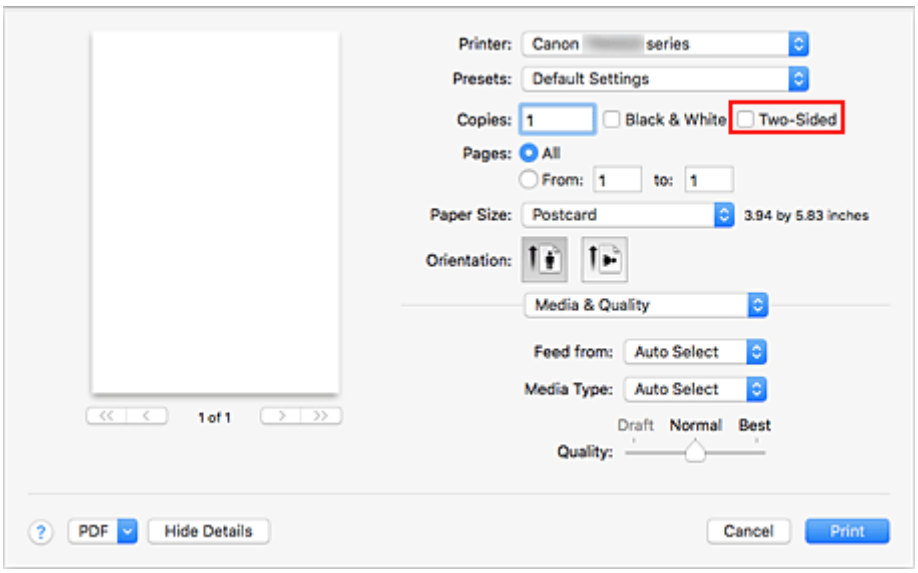

Important

- Two-sided printing is not possible for postcards, so remove the **Two-Sided** check mark. If you print with the **Two-Sided** check mark on, the printing result may not be as you intended.
- You will get cleaner printing if you print the message side first and then print the address side.

5. Click **Print**

The printer prints according to the specified settings.

Adding Printer

Procedure for adding printer to your Mac is explained.

To re-add a printer that was deleted, open **System Preferences** -> **Printers & Scanners**, click **+** next to the printer list, and then perform the procedure described below.

If your printer is connected via USB, and you connect the USB cable to a Mac, the printer is automatically added. The below procedure is not necessary in this case.

1. Check whether **Default** is selected in the displayed dialog

   Note

   - It may take a little time for the name of your printer to appear.

2. Select the printer

   Select the printer listed as **Bonjour Multifunction**.

   Note

   - Check the following if printer does not appear.
     - Printer is on
     - Firewall function of the security software is off
     - In case of Wi-Fi connection: Printer is either connected to the wireless router or directly connected to the PC (Direct Connection)
     - In case of wired **LAN** connection: Printer is connected to the network device via **LAN** cable

3. Select **Secure AirPrint** from **Use**

4. Click **Add**

   The printer is added to your Mac.

How to Open Printer Settings Screen

The settings screen of the printer can be displayed from your application software.

Opening the Page Setup Dialog

Use this procedure to set the page (paper) settings before printing.

1. Select **Page Setup...** from the **File** menu of the application software

   The Page Setup dialog opens.

Opening the Print Dialog

Use this procedure to set the print settings before printing.

1. Select **Print...** from the **File** menu of the application software

   The Print dialog opens.

Displaying the Printing Status Screen

Check the print progress according to the following procedure:

1. Launch the printing status screen

   - If the print data has been sent to the printer

     The printing status screen opens automatically. To display the printing status screen, click the (the printer icon) displayed on the Dock.

   - If the print data has not been sent to the printer

     Open **System Preferences**, and select **Printers & Scanners**.

     To display the printing status screen, select the name of your printer model from the printer list, and then click **Open Print Queue...**.

2. Check the printing status

   You can check the name of the file being printed or ready for being printed.

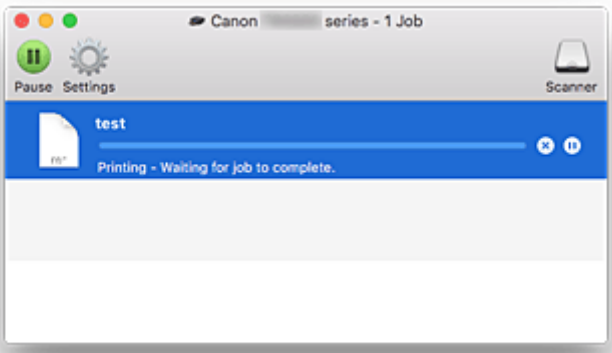

Deletes the specified print job.

Stops printing the specified document.

Resumes printing the specified document.

Stops printing all documents.

Displayed only when printing of all documents is being stopped, and resumes printing all documents.

Important

- If an error occurs, an error message will appear on the printing progress confirmation screen.
- The content of the error message may differ depending on the OS version.
- The printer part names in the error message may differ from what is listed in this manual.
- If the content of the error message is difficult to understand, check the error message displayed on the printer operation panel.

Deleting the Undesired Print Job

If the printer does not start printing, canceled or failed print job data may be remaining.
Delete unnecessary print jobs from the print status check screen.

1. Open **System Preferences**, and select **Printers & Scanners**

2. Select your model, and then click **Open Print Queue...**

   The print status check screen appears.

3. Select the unnecessary print job and click (Delete)

   The selected print jobs will be deleted.

Removing Printer That Is No Longer Required from List of Printers

The printer that is no longer in use can be removed from the list of printers.
Before removing the printer, remove the cable connecting the printer and PC.

You cannot remove the printer if not logged in as the administrator. For information about an administrative user, see **Users & Groups** from **System Preferences**.

1. Open **System Preferences**, and select **Printers & Scanners**

2. Delete printer from list of printers

   Select the printer you wish to remove from the list of printers and click **-**.

   Click **Delete Printer** when the confirmation message appears.

Printing Using Canon Application Software

- **Easy-PhotoPrint Editor Guide**

Printing Using a Web Service

- **Using PIXMA/MAXIFY Cloud Link**

Printing from Smartphone/Tablet

- Printing from iPhone/iPad/iPod touch (iOS)
- Printing from Smartphone/Tablet (Android)
- Printing from Windows 10 Mobile Device
- Printing/Scanning with Wireless Direct

Printing/Scanning with Wireless Direct

You can connect devices (e.g. smartphone, or tablet) to the printer by two methods below.

- Wireless connection (connecting devices via a wireless router)
- Direct wireless connection (connecting devices using Wireless Direct)

This section describes Wireless Direct, which allows you to print or scan by connecting the devices to the printer directly.

Follow the procedure below to use Wireless Direct.

1. Preparing the printer.

   Changing Printer Setting to Use Wireless Direct

2. Preparing a device to connect to the printer.

   Changing Settings of a Device and Connecting It to the Printer

3. Printing/Scanning.

   Printing/Scanning with Wireless Direct

Important

- You can connect up to 5 devices to the printer at the same time.
- Check the usage restrictions and switch the printer to the Wireless Direct.

  Restrictions

Changing Printer Setting to Use Wireless Direct

1. Check that printer is turned on.

2. Select (Setup) on HOME screen.

   Using the Operation Panel

3. Select **Device settings**.

4. Select **LAN settings**.

5. Select **Wireless Direct**.

   The **Wireless Direct setting list** screen appears.

6. Select **Settings**.

7. Select **Enable/disable Wireless Direct**.

8. Select **ON**.

The Wireless Direct is enabled and a device can be connected to the printer wirelessly.

Note

- To show the password, select **Show password**. To hide the password, select **Hide password**.
- The **Wireless Direct setting list** screen shows settings for when using the printer with Wireless Direct.

  Devices detect the printer by **Network (SSID)/device name** shown on the screen.
- The password is required when connecting a device to the printer. Depending on the device you are using, no password is required.
- When you connect a Wi-Fi Direct compatible device to the printer, select the device name displayed on the touch screen from your device.
- The identifier (SSID) and the security setting are specified automatically. To update them, see below.

  Changing Wireless Direct Setting

Changing Settings of a Device and Connecting It to the Printer

1. Turn on Wi-Fi function on your device.

   Enable "Wi-Fi" on your device's "Setting" menu.

   For more on turning on Wi-Fi function, see your device's instruction manual.

2. Select "DIRECT-XXXX-TS9500series" ("X" represents alphanumeric characters) from list displayed on device.

   Note

   - If "DIRECT-XXXX-TS9500series" does not appear on the list, Wireless Direct is not enabled.

     See Changing Printer Setting to Use Wireless Direct to enable Wireless Direct.

3. Enter password.

   Your device is connected to the printer.

   Note

   - Check the password for the Wireless Direct.

     Check by one of the following methods.

     - Display on the touch screen.

       LAN settings
     - Print the network settings.

       Printing Network Settings

- Depending on the device you are using, entering the password is required to connect a device to the printer via Wi-Fi. Enter the password specified for the printer.
- If your Wi-Fi Direct compatible device is set to prioritize using Wi-Fi Direct and it is connecting to the printer, the printer displays a confirmation screen asking if you allow the device to connect to the printer.

  Make sure the name on the touch screen is the same as that of your wireless communication device and select **Yes**.

Printing/Scanning with Wireless Direct

Connect a device and the printer and start printing/scanning.

Note

- For more on printing or scanning from a device via Wi-Fi, refer to the device's or application's instruction manual.
- You can print/scan from your smartphone or tablet by installing Canon PRINT Inkjet/SELPHY. Download it from App Store and Google Play.
  - For iOS
  - For Android

Changing Wireless Direct Setting

Change the settings for the Wireless Direct following the procedure below.

1. Check that printer is turned on.

2. Select (Setup) on the HOME screen.

   - Using the Operation Panel

3. Select **Device settings**.

4. Select **LAN settings**.

   The **LAN settings** screen appears.

   Note

   - To print network settings, select **Print details** in the **LAN settings** screen.

5. Select **Wireless Direct**.

   The **Wireless Direct setting list** screen appears. You can check the current Wireless Direct settings.

6. Select **Settings**.

7. Select a setting item.

- **Change SSID/device name**

  Change the identifier (SSID) for Wireless Direct.

  The identifier (SSID) is the printer's name (device name) displayed on a Wi-Fi Direct compatible device.

  Follow the procedure below to change the identifier (SSID).

  1. Select the entry field.
  2. Enter the identifier (SSID) (up to 32 characters) and select **OK**.
  3. Select **OK**.

     Selecting **OK** finishes specifying the identifier (SSID).

  Selecting **Auto update** displays the confirmation screen. To update the identifier (SSID) and the password, select **Yes**. You can check the updated identifier (SSID)/password on the **Wireless Direct setting list** screen.

- **Change password**

  Change the password for Wireless Direct.

  - Selecting **Change manually** displays the entry field.

    Follow the procedure below to change the password.

    1. Select the entry field.
    2. Enter the password (up to 10 characters) and select **OK**.
    3. Select **OK**.

       Selecting **OK** finishes specifying the password.

  - Selecting **Auto update** displays the confirmation screen. To update the identifier (SSID) and the password, select **Yes**. You can check the updated identifier (SSID)/password on the **Wireless Direct setting list** screen.

- **Connection request confirmation**

  Change the confirmation screen setting when a Wi-Fi Direct compatible device is connecting to the printer.

If you want the printer to display the screen to inform you a Wi-Fi Direct compatible device is connecting to the printer, select **Yes**.

Important

- To prevent an unauthorized access, we recommend you should not change the setting from the default.

8. Tap (HOME).

The HOME screen is displayed.

Note

- If you change the Wireless Direct setting of the printer, also change the wireless router setting of the device.

Printing Photo Data

- Printing Photographs Saved on Memory Card Basic
- Setting Items for Photo Printing Using Operation Panel

Printing Photographs Saved on Memory Card

You can print the photograph saved on the memory card easily.

This section describes the procedure to print the photograph in **Select photo print**.

1. Check that printer is turned on.

2. Load photo paper.

3. Select **Print** on the HOME screen.

   Using the Operation Panel

4. Select **Memory card**.

   The memory card print menus are displayed.

5. Select **Select photo print**.

6. Insert memory card into card slot.

   The photo selection screen is displayed.

   Note

   - When you insert the memory card before you displays the memory card print menus, the photo selection screen is displayed.
   - If no printable photo data is saved on the memory card, **Saved data is not of a supported type.** is displayed on the touch screen.
   - If more than 2,000 photo data are saved on the memory card, the photo data is split by group per 2,000 photos in reverse chronological order (date last modified) automatically. Check the message displayed on the touch screen and select **OK**.

7. Specify settings as necessary.

   - To select the photo to print:

     Flick horizontally to select the photo.

     You can also select the photo by tapping or .

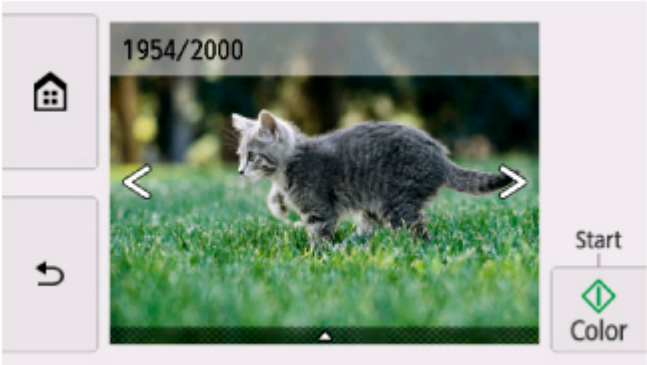

You can print a copy of the displayed photo by tapping **Color**.

- To change the display method, the number of copies, or the print settings:

  Tap △ near the bottom of the displayed photo to display menus.

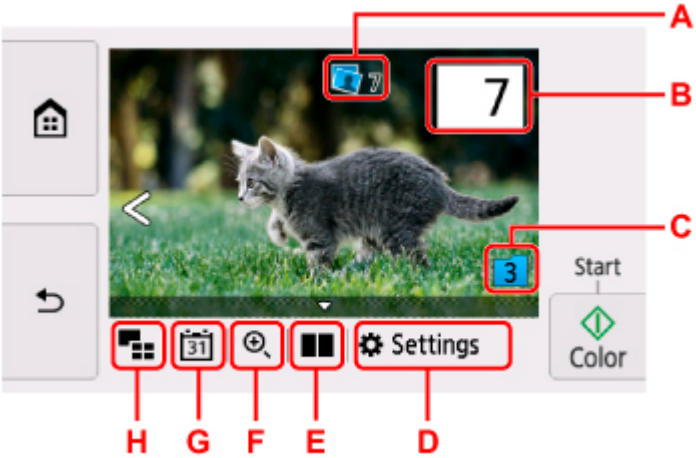

A: Total number of copies is displayed

When tapping, the **Check total no. of copies** screen is displayed and you can check the number of copies for each photo. On the **Check total no. of copies** screen, you can change the number of copies for each photo.

B: Specify the number of copies

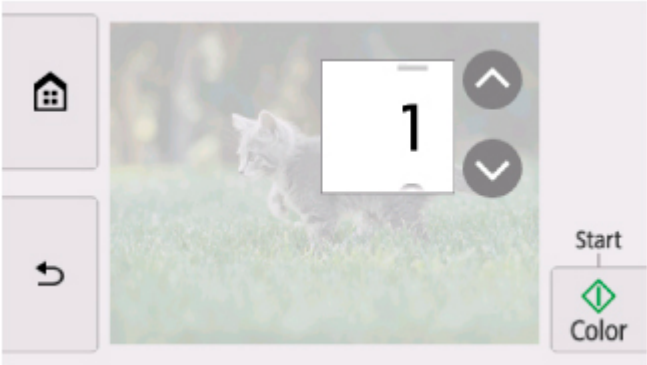

Tap ⌃ or ⌄ to specify the number of copies.

Touch and hold to specify the number of copies by 10 copies.

You can also flick the number to specify.

Note

- You can specify the number of copies for each photo. Display the photo you want to print and specify the number of copies when the desired photo is displayed.

C: Select to switch the photo group.

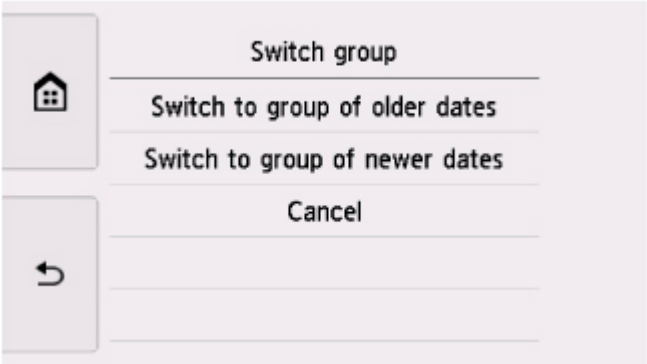

For details:

- Using Useful Display Functions

D: Select to display the **Settings** screen.

You can change the settings of page size, media type, and print quality and so on.

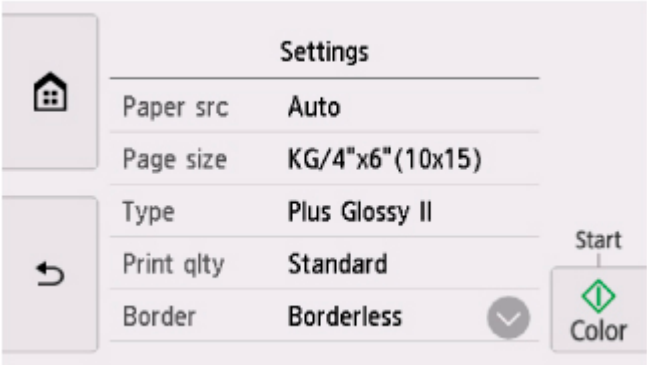

For more on the setting items:

- Setting Items for Photo Printing Using Operation Panel

E: Select to display two photos side-by-side.

For more on the display method:

- Using Useful Display Functions

F: Select to zoom in on the photo.

For details:

- Using Useful Display Functions

G: Select display photo with specifying the date (last modified date of data).

For details:

- Using Useful Display Functions

H: Select to display the multiple photos at once.

For more on the display method:

- Using Useful Display Functions

8. Tap **Color**.

The printer starts printing.

Note

- Tap **Stop** to cancel printing.

- While processing the print job, you can add the print job (Reserve photo print).

  Adding Print Job

Adding Print Job

You can add the print job (Reserve photo print) while printing photos.

Follow the procedure below to add the print job.

1. Flick photo while printing to select next photo.

   Note

   - While you select the photo, the printer prints the reserved photos.
   - The reserved photo icon appears on the photo included in the print job.

2. Specify number of copies and print settings for each photo.

   Note

   - While processing the print job, you cannot change the setting for **Page size** or **Type** on print settings confirmation screen. The setting is the same as the setting for the photo included in the print job.

3. Tap **Color**.

   The reserved photo is printed next to the photo that has already been started printing.

   If you want to print more photos, operate from step 1 again.

Note

- While processing the print job, you cannot display the HOME screen, change the print menu, or print from the computer or other devices.
- While processing the print job, the photo in other group is not selected.
- If you tap **Stop** while processing the print job, the screen to select a method to cancel reservation is displayed. If you select **Cancel all reservations**, you can cancel printing all photos. If you select **Cancel the last reservation**, you can cancel the last printing job.
- If there are many print jobs, **Cannot reserve more print jobs. Please wait a while and redo the operation.** may be displayed on the touch screen. In this case, wait a while and add the print job.

Setting Items for Photo Printing Using Operation Panel

You can specify the setting of page size, media type, photo fix and so on to print the photos saved on the memory card.

Print Settings Screen

How to display the print settings screen varies with the print menu.

- **In Select photo print or Slide show:**

  The following screen is displayed by selecting **Settings**.

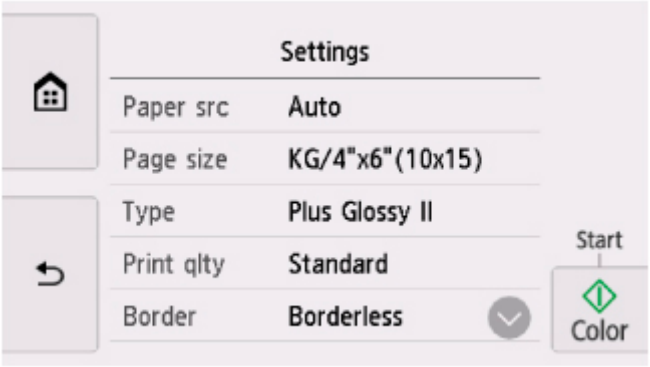

- **In Trimming print:**

  The following screen is displayed before printing.

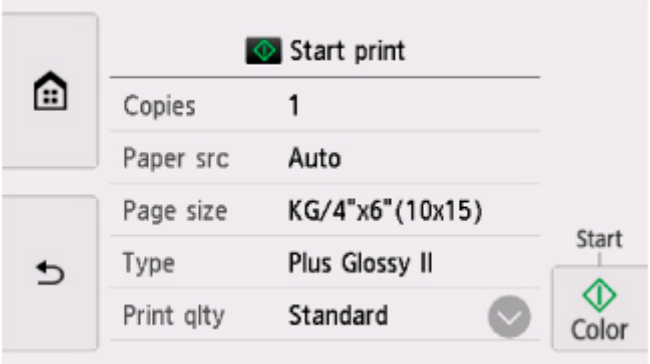

Setting Items

Flick vertically to display setting items and select the setting item to display the settings. Select to specify the setting.

Note

- Depending on the print menu, some setting items cannot be selected. This section describes the setting items in **Select photo print**.

  The setting item which cannot be selected is displayed grayed out or not displayed.

- Some settings cannot be specified in combination with the other setting items or the print menus. If the setting which cannot be specified in combination is selected, and **Error details** are displayed

on the touch screen. In this case, select on the upper left on the touch screen to check the message and change the setting.

- The settings of the page size, media type, etc. are retained even if another print menu is selected or the printer is turned off.

You can specify the following setting items.

- **Paper src**

  Select a paper source (**Rear tray**/**Cassette**/**Auto**) where paper is loaded.

  Note

  - When **Auto** is selected, paper is fed from the paper source where the paper that matches the paper settings (page size and media type) is loaded.

- **Page size**

  Select the page size of the loaded paper.

- **Type** (Media type)

  Select the media type of the loaded paper.

- **Print qlty** (Print quality)

  Select print quality according to the photo.

- **Border** (Bordered/Borderless print)

  Select bordered or borderless print.

- **Photo fix**

  When **Auto photo fix** is selected, the scene or person's face of a shot photo is recognized and the most suitable correction for each photo is made automatically. It makes a darkened face by backlight brighter to print. It also analyzes a scene such as scenery, night scene, person, etc. and corrects each scene with the most suitable color, brightness, or contrasts automatically to print.

  Note

  - As a default, photos on the memory card are printed with auto correction applied.
  - If **No correction** is selected, photos are printed without correction.

- **Red-EyeCorrection**

  Corrects red eyes in portraits caused by flash photography.

  Depending on the type of the photo, red eyes may not be corrected or parts other than the eyes may be corrected.

- **Print date**

  Activates/deactivates to print the date (shooting date) on a photo.

  Note

  - The shooting date is printed according to the settings of **Date display format** in **Other device settings** under **Device settings**.

- Other device settings

Disc Label Printing

- Copying Label Side of Disc Basic
- Printing Photo from Memory Card onto Disc Label

Copying Label Side of Disc

You can copy the label of an existing BD/DVD/CD and print it on a printable disc.

Important

- You cannot print on 3.15 inches / 8 cm printable discs.
- Do not mount the multi-purpose tray until the message prompting you to load the printable disc appears. Doing so can damage the printer.

1. Check that printer is turned on.

2. Select **Copy** on the HOME screen.

   Using the Operation Panel

3. Select **Disc label**.

4. Check message and select **OK**.

   The print area setting screen is displayed.

5. Specify print area and select **OK**.

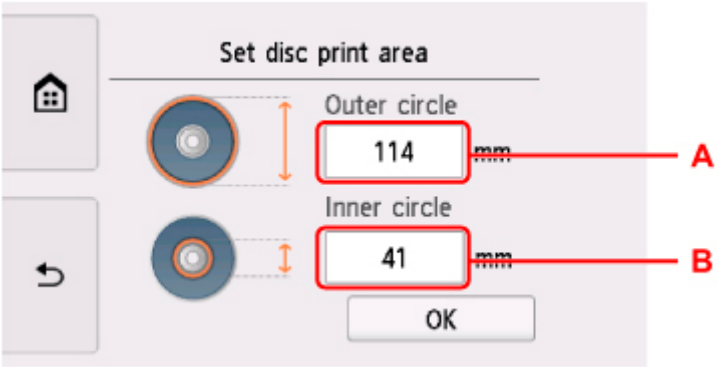

A: Specify the outer circle.

B: Specify the inner circle.

Note

- Measure the outer and inner diameters of the printing surface of the printable disc and make sure you set a value smaller than the measured value for the outer diameter, and a value larger than the measured value for the inner diameter.
- For information on printable discs, contact their manufacturers.

6. Specify the amount of ink.

If the print result is blurry, select **Bleed-proof**. Blurring may be reduced by printing with less ink.

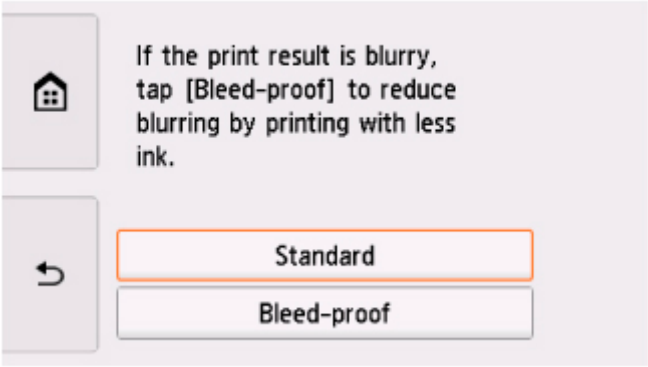

7. Follow on-screen instructions to load copy source BD/DVD/CD on platen and select **OK**.

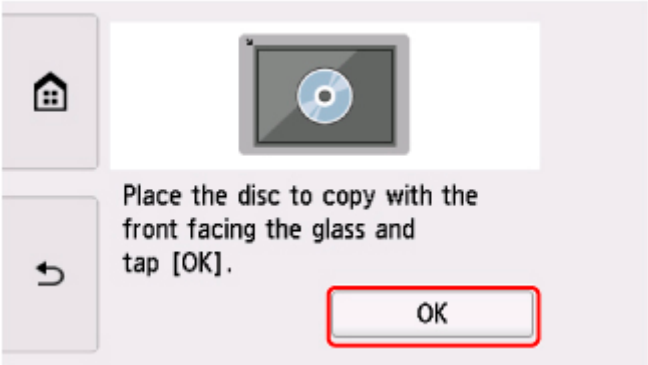

The print setting confirmation screen is displayed.

Important

- Be sure to load the copy source BD/DVD/CD with its label side down on the center of the platen. If you load it near the edge of the platen, part of the image may be cut off.

8. Open operation panel until horizontal.

9. After checking message, tap **Color** for color copying, or **Black** for black & white copying.

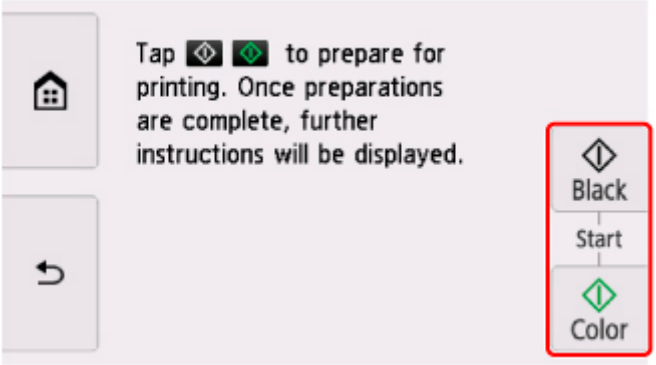

10. Follow on-screen instructions to set printable disc.

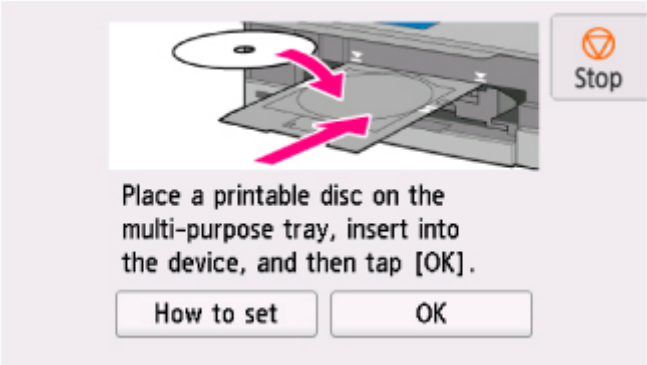

Note

- You can see the procedure to set the printable disc by selecting **How to set**.
- For more on setting the printable disc:

  Placing a Printable Disc

11. Select **OK**.

The printer starts copying.

Note

- Tap **Stop** to cancel copying.
- After printing, allow the printing surface of the disc to dry naturally. Do not use hairdryers or expose the disc to direct sunlight to dry the ink. Do not touch the printing surface until the ink has dried.
- If printing is misaligned, adjust the printing position using **Adjust disc print area** in **Print settings** under **Device settings**.

  Print settings

Printing Photo from Memory Card onto Disc Label

You can print a photograph saved on a memory card onto the disc label of the printable disc.

Important

- You cannot print on 3.15 inches / 8 cm printable discs.
- Do not mount the multi-purpose tray until the message prompting you to load the printable disc appears. Doing so can damage the printer.

1. Check that printer is turned on.

2. Select **Print** on the HOME screen.

   Using the Operation Panel

3. Select **Memory card**.

   The memory card print menus are displayed.

4. Select **Print photos to disc label**.

5. Insert memory card into card slot.

   Note

   - When you insert the memory card before you displays the memory card print menus, the photo selection screen in **Select photo print** is displayed.

     To display the HOME screen, tap (HOME).
   - If no printable photo data is saved on the memory card, **Saved data is not of a supported type.** is displayed on the touch screen.
   - If more than 2,000 photo data are saved on the memory card, the photo data is split by group per 2,000 photos in reverse chronological order (date last modified) automatically. Check the message displayed on the touch screen and select **OK**.

6. Check message and select **OK**.

   The print area setting screen is displayed.

7. Specify print area and select **OK**.

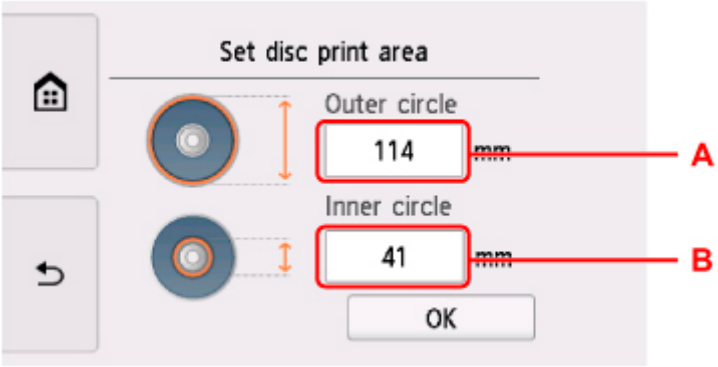

A: Specify the outer circle.

B: Specify the inner circle.

Note

- Measure the outer and inner diameters of the printing surface of the printable disc and make sure you set a value smaller than the measured value for the outer diameter, and a value larger than the measured value for the inner diameter.
- For information on printable discs, contact their manufacturers.

8. Specify the amount of ink.

If the print result is blurry, select **Bleed-proof**. Blurring may be reduced by printing with less ink.

9. Select a photo you want to print.

Note

- Other Options
  - Using Useful Display Functions

10. Specify print area with trimming and select **OK**.

A: Drag to position the trimming frame.

B: Drag to set the trimming frame size.

11. Open operation panel until horizontal.

12. Check message and tap **Color**.

13. Follow on-screen instructions to set printable disc.

Note

- You can see the procedure to set the printable disc by selecting **How to set**.
- For more on setting the printable disc:

  Placing a Printable Disc

14. Select **OK**.

The printer starts printing.

Note

- Tap **Stop** to cancel printing.
- After printing, allow the printing surface of the disc to dry naturally. Do not use hairdryers or expose the disc to direct sunlight to dry the ink. Do not touch the printing surface until the ink has dried.
- If printing is misaligned, adjust the printing position using **Adjust disc print area** in **Print settings** under **Device settings**.

  Print settings

Paper Settings

By registering the paper size and the media type loaded on the rear tray or in the cassette, you can prevent the printer from misprinting by displaying the message before printing starts when the paper size or the media type of the loaded paper differs from the print settings.

Note

- The default display setting is different between when you print or copy from the operation panel of the printer, when you print from Smartphone/tablet, when you print from Windows, and when you print from macOS.

  Default Setting for Displaying the Message which Prevents Misprinting

After loading paper:

- **When you close the feed slot cover:**

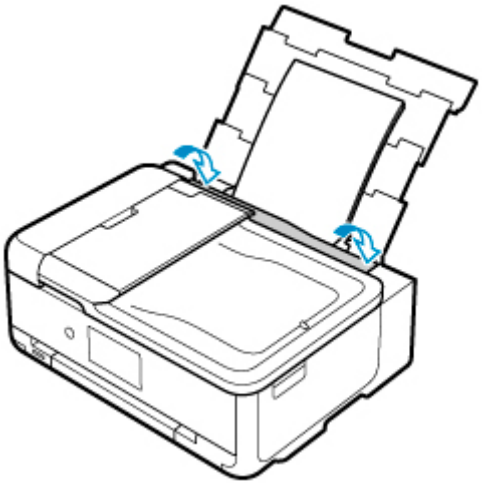

The screen to register the rear tray paper information is displayed.

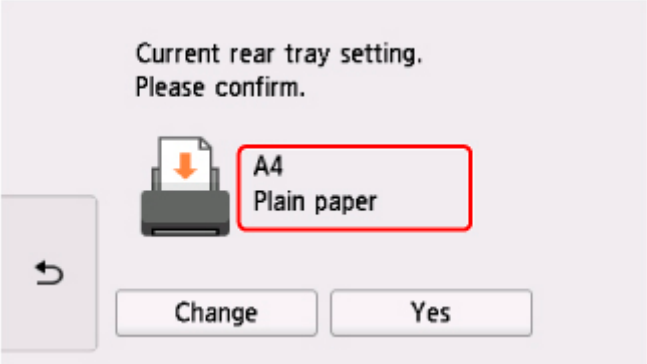

If the page size on the touch screen matches the size of the paper loaded in the rear tray, select **Yes**.

If not, select **Change** to change the setting in accordance with the size of the loaded paper.

- **When you insert the cassette:**

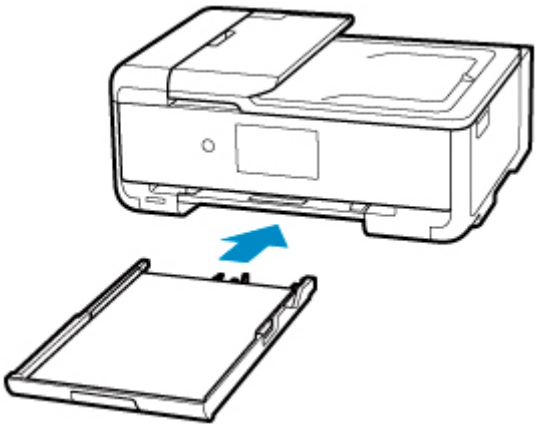

The screen to register the cassette paper information is displayed.

If the page size on the touch screen matches the size of the paper loaded in the cassette, select **Yes**.

If not, select **Change** to change the setting in accordance with the size of the loaded paper.

* You can load only plain paper in the cassette.

Important

- For more on the proper combination of paper settings you can specify by the printer driver (Windows) or on the touch screen:
  - Paper Settings on the Printer Driver and the Printer (Media Type)
  - Paper Settings on the Printer Driver and the Printer (Paper Size)

When the paper settings for printing/copying are different from the paper information registered to the printer:

Ex:

- Paper settings for printing/copying: A5
- Paper information registered to the printer: A4

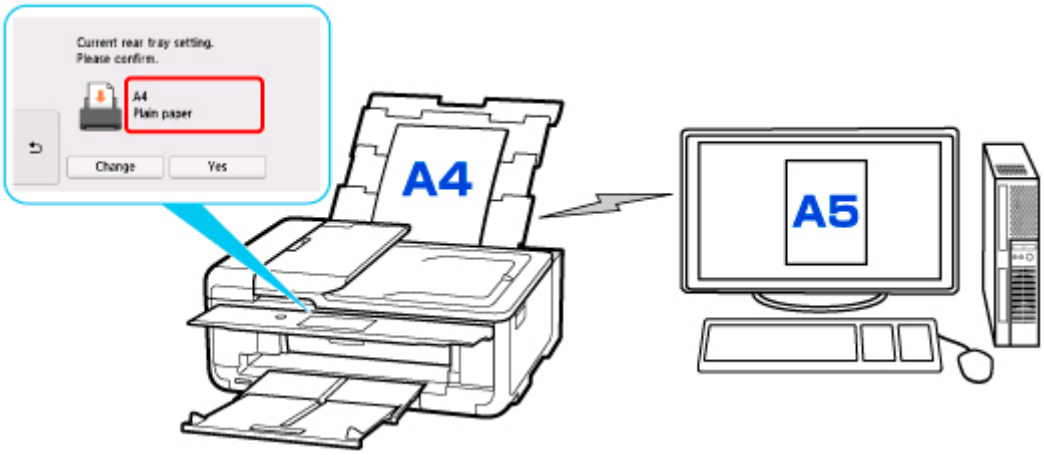

When you start printing/copying, a message is displayed and the paper setting specified for printing/copying is shown under the message.

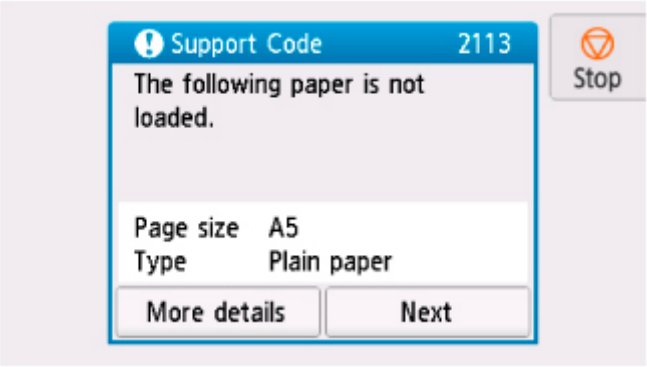

Check the message and select **Next**. When the screen to select the operation is displayed, select one of the operations below.

Note

- Depending on the setting, the choices below may not be displayed.

Print with the loaded paper.

Select if you want to print/copy on the paper loaded without changing the paper settings.

For example, when the paper setting for printing/copying is A5 and the paper information registered to the printer is A4, the printer starts printing/copying on the paper loaded in the rear tray or in the cassette without changing the paper size setting for printing/copying.

Replace the paper and print

Select if you want to print after replacing the paper of the rear tray or the cassette.

For example, when the paper size setting for printing/copying is A5 and the paper information registered to the printer is A4, you load A5 sized paper in the rear tray or in the cassette before you start printing/copying.

The paper information registration screen is displayed after replacing the paper. Register the paper information according to the paper that you loaded.

Note

- If you do not know what paper information to register to the printer, tap (Back) when the screen to select the operation is displayed.
- For more on the proper combination of paper settings you can specify by the printer driver (Windows) or on the touch screen:
  - Paper Settings on the Printer Driver and the Printer (Media Type)
  - Paper Settings on the Printer Driver and the Printer (Paper Size)

Cancel

Cancels printing.

Select when you change the paper settings specified for printing/copying. Change the paper settings and try printing/copying again.

Default Setting for Displaying the Message which Prevents Misprinting

- **When you print/copy using the operation panel of the printer or when you print from smartphone/tablet:**

  The message which prevents misprinting is enabled by default.

  To change the setting:

  - Feed settings

- **When you print from Windows:**

  The message which prevents misprinting is disabled by default.

  To change the setting:

  - Changing the Printer Operation Mode

- **When you print from macOS:**

  The message which prevents misprinting is enabled by default.

  To change the setting:

  - Changing the Printer Operation Mode

Important

- When the message which prevents misprinting is disabled:

  The printer starts printing/copying even though the paper settings for printing/copying and the paper information registered to the printer are different.

Copying

Making Copies Basics

Reducing/Enlarging Copies

Two-Sided Copying

Collated Copying

Special Copy Menu

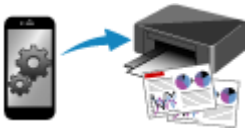

Copying Using Smartphone or Tablet

Making Copies

This section describes the procedure to copy with **Standard copy**.

1. Check that printer is turned on.

2. Load paper.

3. Select **Copy** on the HOME screen.

   Using the Operation Panel

4. Select **Standard copy**.

   The Copy standby screen is displayed.

5. Load original document on platen or in ADF (Auto Document Feeder).

6. Specify settings as necessary.

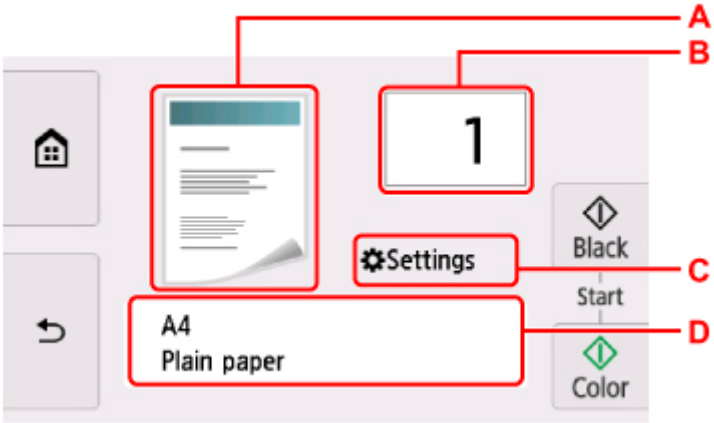

A: The scanning method and copy layout is displayed.

Switch the scanning method from the ADF and layout (single-sided/two-sided).

B: Specify the number of copies.

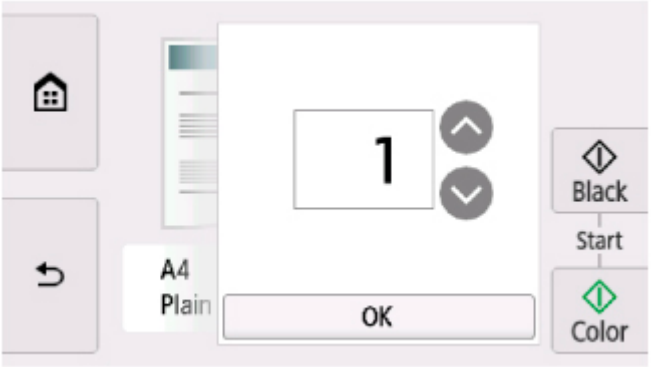

Tap or to specify the number of copies.

If you keep touching here, the number scrolls by 10.

You can also flick the number to specify.

C: Display the print setting items.

For more on the setting items:

Setting Items for Copying

D: Specify the page size and the media type.

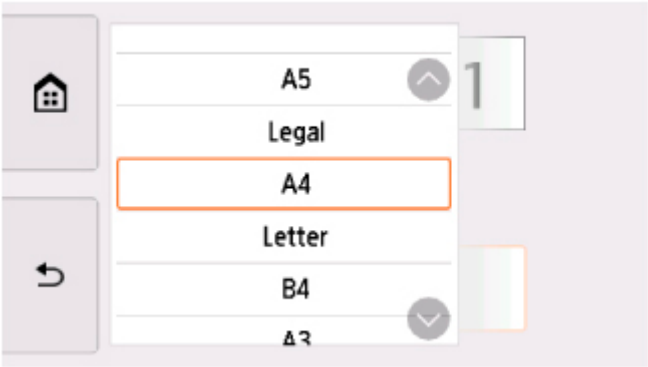

7. Tap **Color** for color copying, or **Black** for black & white copying.

   The printer starts copying.

   Remove the original on the platen or from the document output slot after copying is complete.

   Important

   - If you load the original on the platen, do not open the document cover or remove the original while **Scanning document...** is displayed on the touch screen.
   - If you load the original in the ADF, do not move the original until copying is complete.

   Note

   - To cancel copying, tap **Stop**.

Adding Copying Job (Reserve copy)

If you load the original on the platen, you can add the copying job while printing (Reserve copy).

The screen below is displayed when you can add the copying job.

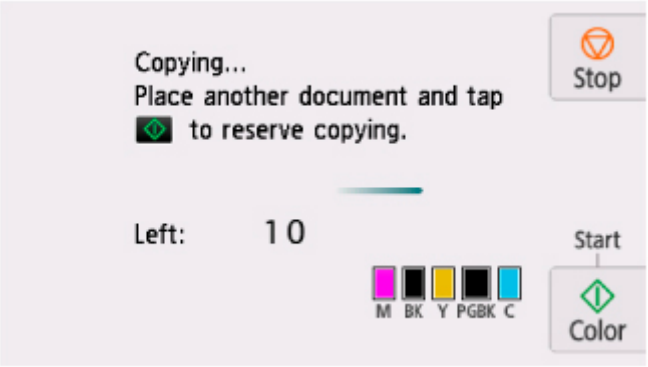

Load the original on the platen and tap the same button (**Color** or **Black**) as the one which you previously tapped.

Important

- When you load the original on the platen, move the document cover gently.

Note

- When **Print qlty** (print quality) is set **High**, you cannot add the copying job.
- When you add the copying job, the number of copies or the settings such as the page size or media type cannot be changed.
- If you tap **Stop** while reserve copying is in progress, the screen to select the method to cancel copying is displayed. If you select **Cancel all reservations**, you can cancel copying all scanned data. If you select **Cancel the last reservation**, you can cancel the last copying job.
- If you set a document of too many pages to add the copying job, **Cannot add more copy jobs. Please wait a while and redo the operation.** may appear on the touch screen. Select **OK** and wait a while, and then try copying again.
- If **Failed to reserve the copy job. Start over from the beginning.** appears on the touch screen when scanning, select **OK** and tap **Stop** to cancel copying. After that, copy the documents that have not been finished copying.

Setting Items for Copying

You can change the copy settings such as magnification and intensity.

Print Settings Screen

Note

- For more on the print settings screen or the setting item for **Photo copy**, see Copying Photos.

The following screen is displayed by selecting **Settings** in the Copy standby screen.

Example in **Standard copy**:

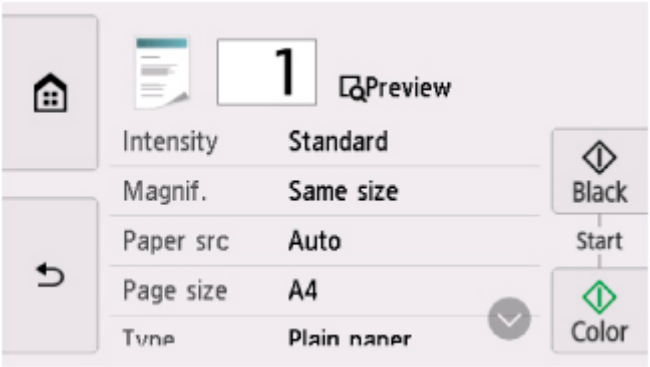

Preview

When **Preview** is displayed on the print settings screen, selecting **Preview** allows you to preview an image of the printout on the preview screen.

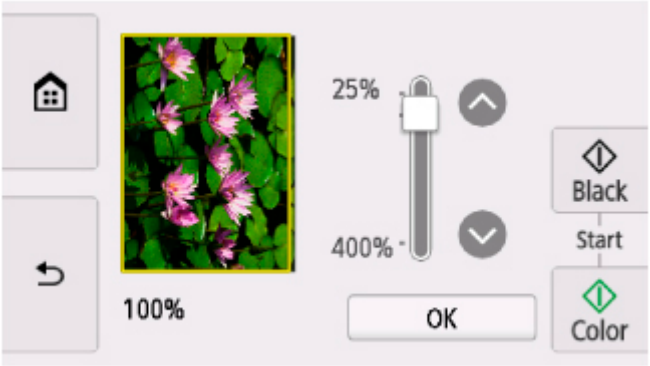

For details, see below.

- Displaying Preview Screen

Setting Items

Flick to display setting items and select the setting item to display the settings. Select to specify the setting.

Note

- Depending on the copy menu, some setting items cannot be selected. This section describes the setting items in **Standard copy**.

  The setting item which cannot be selected is displayed grayed out.

  For more on the setting items for **Photo copy**, see Copying Photos.
- Some settings cannot be specified in combination with the setting of other setting item or the copy menu. If the setting which cannot be specified in combination is selected, appears on the touch screen. In this case, select on the upper left on the touch screen to check the message and change the setting.
- The settings of the page size, media type, etc. are retained even if the printer is turned off.
- When copying starts in the copy menu that is not available with the specified setting, **The specified function is not available with current settings.** is displayed on the touch screen. Change the setting, following the on-screen instructions.

Following setting items can be changed.

- **Intensity**

  Specify the intensity.

  A: Select to activate/deactivate automatic intensity adjustment.

  When **ON** is selected, the intensity is adjusted automatically according to the originals loaded on the platen.

  B: Drag to specify the intensity.
- **Magnif.** (Magnification)

  Specify the reduction/enlargement method.

  Reducing/Enlarging Copies
- **Paper src**

  Select a paper source (**Rear tray**/**Cassette**/**Auto**) where paper is loaded.

  ### Note

  - When **Auto** is selected, paper is fed from the paper source where the paper that matches the paper settings (page size and media type) is loaded.

- **Page size**

  Select the page size of the loaded paper.

- **Type** (Media type)

  Select the media type of the loaded paper.

- **Print qlty** (Print quality)

  Adjust print quality according to the original.

  Important

  - If you use **Draft** with **Type** set to **Plain paper** and the quality is not as good as expected, select **Standard** or **High** for **Print qlty** and try copying again.
  - Select **High** for **Print qlty** to copy in grayscale. Grayscale renders tones in a range of grays instead of black or white.

- **Layout**

  Select the layout.

  - Copying Two Pages onto Single Page
  - Copying Four Pages onto Single Page

- **ADF duplex scan**

  Select whether to perform duplex scanning from the ADF (Auto Document Feeder).

  - Two-Sided Copying

- **2-sidedPrintSetting**

  Select whether to perform two-sided copying.

  - Two-Sided Copying

- **Collate**

  Select whether to obtain sorted printouts when making multiple copies of a multi-paged original.

  - Collated Copying

Scanning

Scanning from Computer (Windows)

Scanning from Computer (macOS)

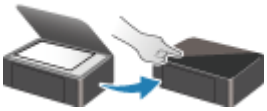

Scanning from Operation Panel

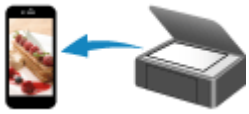

Scanning Using Smartphone/Tablet

Scanning from Computer (macOS)

- **Scanning According to Item Type or Purpose (IJ Scan Utility Lite)**
  - IJ Scan Utility Lite Features
  - Scanning Easily (Auto Scan) **Basics**
  - Scanning Documents and Photos
- **Scanning Tips**
  - Positioning Originals (Scanning from Computer)

Scanning According to Item Type or Purpose (IJ Scan Utility Lite)

- IJ Scan Utility Lite Features
- Scanning Easily (Auto Scan) Basics
- Scanning Documents and Photos

Important

- Available functions and settings vary depending on your scanner or printer.

IJ Scan Utility Lite Features

Use IJ Scan Utility Lite to scan and save documents, photos, or other items at one time by simply clicking the corresponding icon.

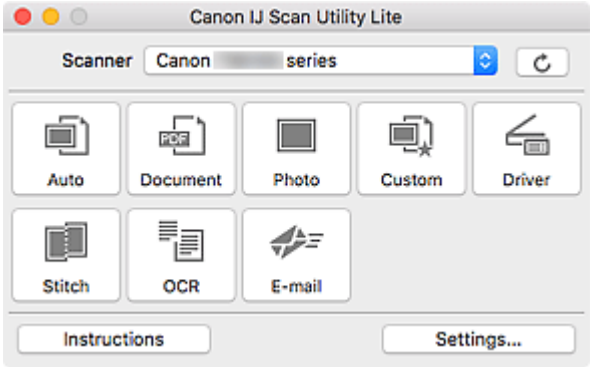

Important

- The displayed items and available functions vary depending on your scanner or printer.

Multiple Scanning Modes

Auto allows for one click scanning with default settings for various items. **Document** will sharpen text in a document or magazine for better readability, and **Photo** is best suited for scanning photos.

Note

- For details on the IJ Scan Utility Lite main screen, see IJ Scan Utility Lite Main Screen.

Save Scanned Images Automatically

Scanned images are automatically saved to a preset folder. The folder can be changed as needed.

Note

- The default save folder is the **Pictures** folder.
- For how to specify a folder, see Settings Dialog.

Application Integration

Scanned images can be sent to other applications. For example, display scanned images in your favorite graphics application, attach them to e-mails, or extract text from images.

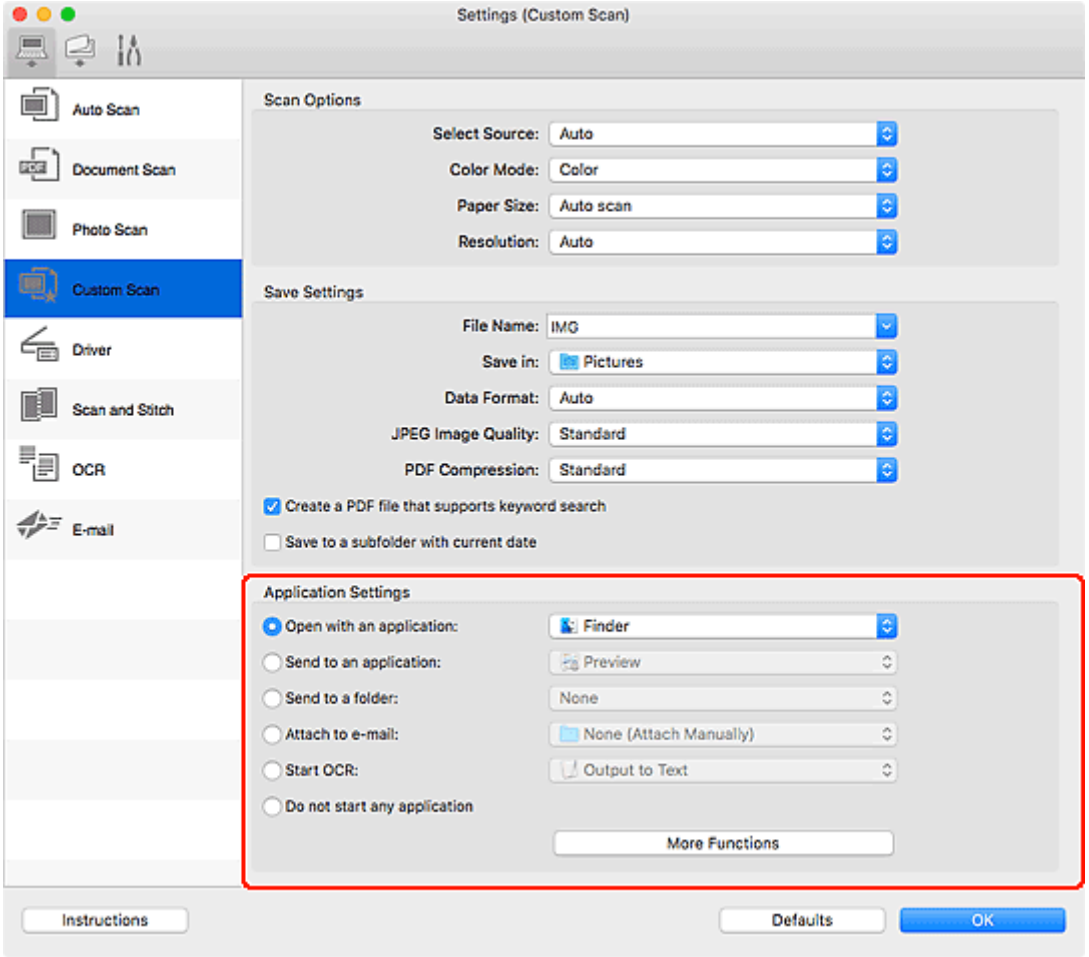

Note

- To set the applications to integrate with, see Settings Dialog.

Scanning Easily (Auto Scan)

Auto Scan allows for automatic detection of the type of the item placed on the platen or ADF (Auto Document Feeder).

Important

- This function is not supported depending on your model.
- The following types of items may not be scanned correctly. In that case, adjust the cropping frames (selection boxes; scan areas) in the screen displayed by clicking **Driver** in the IJ Scan Utility Lite main screen, and then scan again.
  - Photos with a whitish background
  - Items printed on white paper, hand-written text, business cards, and other unclear items
  - Thin items
  - Thick items
- When scanning two or more documents from the ADF, place documents of the same size.

1. Check that scanner or printer is turned on.

2. Place items on platen or ADF.

   Positioning Originals (Scanning from Computer)

3. Start IJ Scan Utility Lite.

4. Click **Auto**.

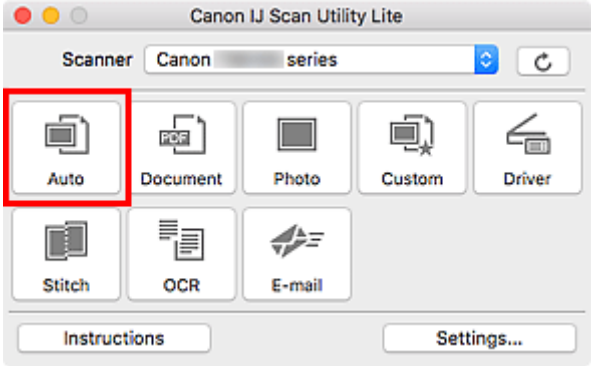

   Scanning starts.

Note

- To cancel the scan, click **Cancel**.
- Use the **Settings (Auto Scan)** dialog to set where to save the scanned images and to make advanced scan settings.
- To scan a specific item type, see the following pages.

  Scanning Documents and Photos
  Scanning with Favorite Settings

Scanning Multiple Documents at One Time from the ADF (Auto Document Feeder)

Scanning Documents and Photos

Scan items placed on the platen with settings suitable for documents or photos.

Save documents in formats such as PDF and JPEG, and photos in formats such as JPEG and TIFF.

1. Place the item on the platen.

   Positioning Originals (Scanning from Computer)

2. Start IJ Scan Utility Lite.

3. To specify the paper size, resolution, PDF settings, etc., click **Settings...**, and then set each item in the Settings dialog.

   Note

   - Once settings are made in the Settings dialog, the same settings can be used for scanning from the next time.
   - In the Settings dialog, specify image processing settings such as slant correction, set where to save the scanned images, and more, as needed.

   When setting is completed, click **OK**.

4. Click **Document** or **Photo**.

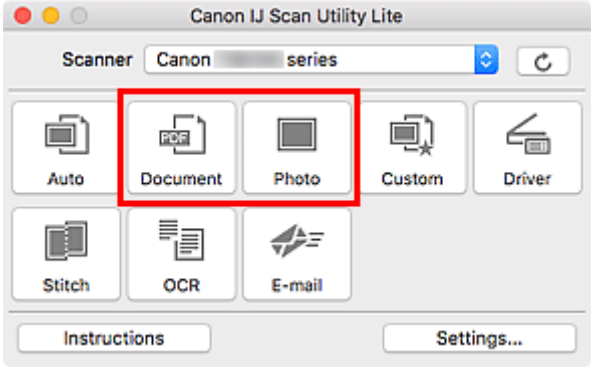

   Scanning starts.

Note

- To cancel the scan, click **Cancel**.

Scanning Tips

- Positioning Originals (Scanning from Computer)

Positioning Originals (Scanning from Computer)

This section describes how to load originals on the platen or ADF (Auto Document Feeder) for scanning. If items are not placed correctly they may not be scanned correctly.

Important

- Be sure to observe the following when loading the original on the platen. Failure to observe the following may cause the scanner to malfunction or the platen glass to break.
  - Do not place any objects weighing 4.4 lb (2.0 kg) or more on the platen glass.
  - Do not put any pressure of 4.4 lb (2.0 kg) or more on the platen glass, such as pressing down the original.
- Close the document cover when scanning.
- Do not touch the operation panel buttons or LCD (Liquid Crystal Display) when opening/closing the document cover. May result in unintended operation.
- When using a personal scanner in the upright position, the item type may not be detected automatically. In that case, specify the item type in IJ Scan Utility and scan.

- Placing Items (Platen)
- Placing Documents (ADF (Auto Document Feeder))
- Placing Items (When Using Stand)

Placing Items (Platen)

Place items as described below to scan by detecting the item type and size automatically.

Important

- Depending on your model, the function to scan by automatically detecting the item type and size does not appear.
- When scanning by specifying the paper size, align an upper corner of the item with the corner at the arrow (alignment mark) of the platen.
- Photos that have been cut to irregular shapes and items smaller than 1.2 inches (3 cm) square cannot be cropped accurately when scanning.
- Reflective disc labels may not be scanned as expected.
- If scanned by detecting the item type and size automatically, the response may differ. In that case, adjust the cropping frame (selection box) manually.

Photos, Postcards, Business Cards, and BD/DVD/CD	Magazines, Newspapers, and Documents
Single item: Place the item face-down on the platen, with 0.4 inch (1 cm) or more space between the edges (diagonally striped area)	Place the item face-down on the platen and align an upper corner of the item with the corner at the arrow (alignment mark) of the platen. Portions placed on the diagonally striped area cannot be scanned.

of the platen and the item. Portions placed on the diagonally striped area cannot be scanned.

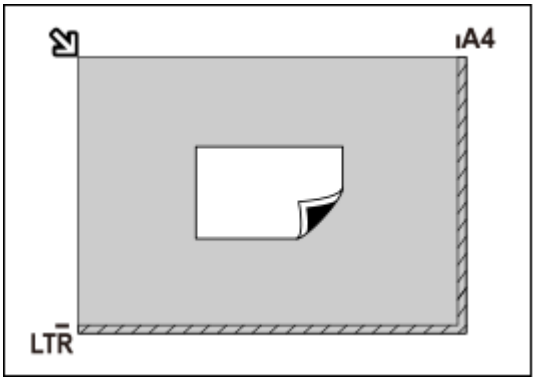

Important

- Large items (such as A4 size photos) that cannot be placed away from the edges/arrow (alignment mark) of the platen may be saved as PDF files. To save in a format other than PDF, scan by specifying the data format.

Multiple items:

Allow 0.4 inch (1 cm) or more space between the edges (diagonally striped area) of the platen and items, and between items. Portions placed on the diagonally striped area cannot be scanned.

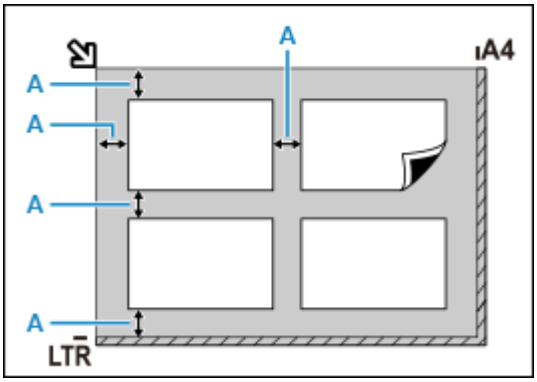

A : 0.4 inch (1 cm) or more

Note

- In IJ Scan Utility Lite, place up to 12 items.
- Positions of slanted items (10 degrees or less) are corrected automatically.

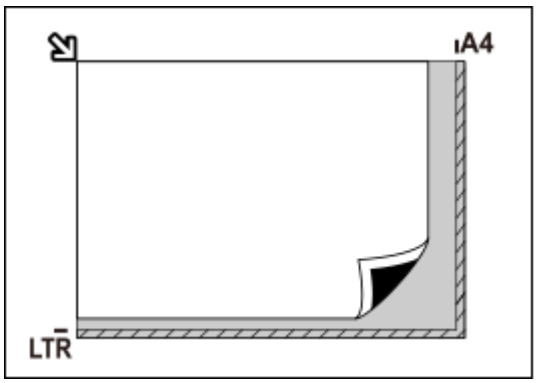

Important

- **Inkjet All-In-One printer:**

  For the portions in which items cannot be scanned, click Home to return to the top page of the Online Manual for your model and search for "Loading Originals."

- **Personal scanner:**

  For the portions in which items cannot be scanned, click Home to return to the top page of the Online Manual for your model and search for "Items You Can Place & How to Place Items."

Placing Documents (ADF (Auto Document Feeder))

Important

- Do not leave thick items on the platen when scanning from the ADF. May result in paper jam.
- Place and align documents of the same size when scanning two or more documents.
- For supported document sizes when scanning from the ADF, click Home to return to the top page of the Online Manual for your model and search for "Supported Originals."

1. Make sure any original has been removed from platen.

2. Open document tray (A).

3. Slide the paper guides (B) all the way out.

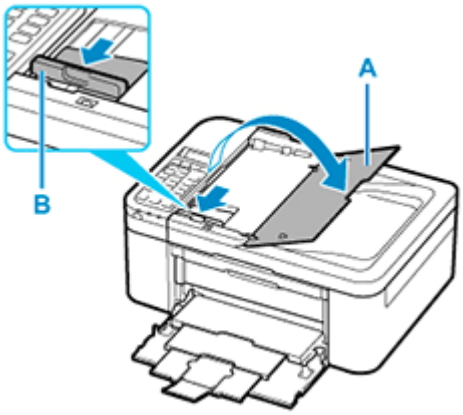

4. Load document with side to scan facing up in document tray.

   Insert the document until it stops.

5. Adjust document guide (B) to match width of document.

   Do not slide the document guide too hard against the document. The document may not be fed properly.

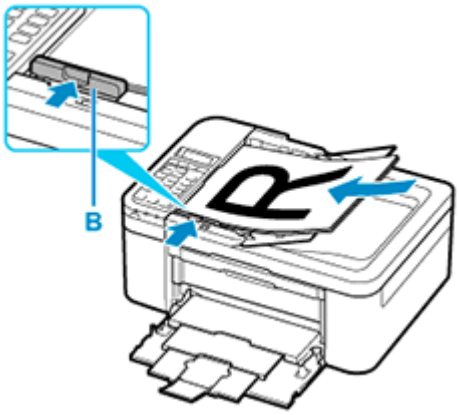

Note

- When scanning duplex documents, place the front sides facing up. They will not be scanned correctly if placed the other way around.

Placing Items (When Using Stand)

1. Place item on platen.

   1. Open the document cover.

2. Place the item with the side to scan facing the platen, and then align it with the alignment mark.

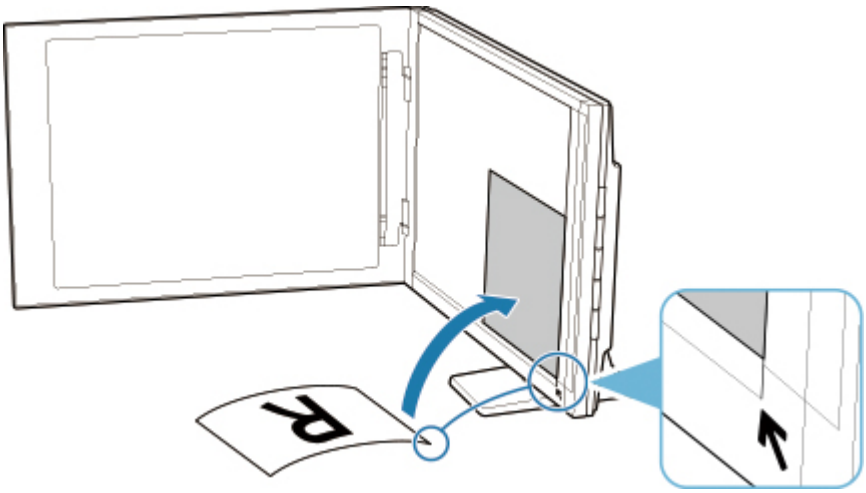

Important

- If you open the document cover wide, the scanner may fall over.
- Portions placed over (A) (0.094 inch (2.4 mm) from the left edge of the platen) or (B) (0.106 inch (2.7 mm) from the front edge) cannot be scanned.

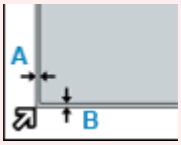

2. Gently close document cover.

While scanning, hold the document cover gently with your hand to keep it closed.

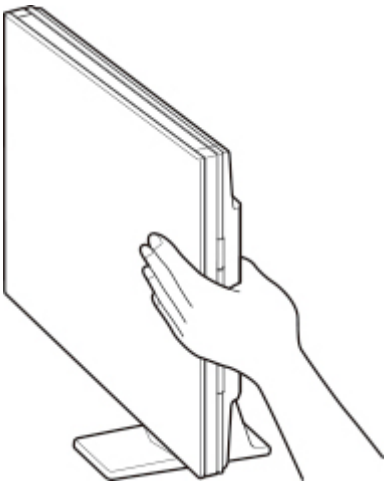

Important

- Keep these points in mind when using the scanner in the upright position.
  - Do not subject the scanner to vibration during operation. The correct image results may not be obtained (for example, images may blur).

- The item type may not be detected automatically. In that case, specify the item type in IJ Scan Utility and scan.

Scanning Using Smartphone/Tablet

- Using PIXMA/MAXIFY Cloud Link
- Printing/Scanning with Wireless Direct

Frequently Asked Questions

Network

- Cannot Find Printer on Network
- Cannot Find Printer while Using Wi-Fi
- Network Key (Password) Unknown
- Cannot Print or Connect

For other questions about network, click here.

Print

- Printer Does Not Print
- Printouts Are Blank/Blurry or Fuzzy/Inaccurate or Bleeding Colors/Streaks or Lines
- Printout Results Are Unsatisfactory
- List of Support Code for Error (Paper Jams)
- Cannot Print or Connect

Installation

- Failed to MP Drivers Installation (Windows)

Error

- An Error Occurs
- Message (Support Code) Appears

Solve Problems

Printer Does Not Work

- Printer Does Not Turn On
- Printer Turns Off Unexpectedly or Repeatedly
- Wrong Language Appears in Touch Screen
- Display on Touch Screen Is Off
- USB Connection Problems
- Cannot Communicate with Printer via USB

- Printer Does Not Print
- Copying/Printing Stops
- Cannot Print Using AirPrint
- Printer Prints Slowly
- Ink Does Not Come Out
- List of Support Code for Error (Paper Jams)
- Paper Does Not Feed Properly/"No Paper" Error
- Cannot Print on the Disc Label
- Automatic Duplex Printing Problems
- Printout Results Are Unsatisfactory

- Scanning Problems (Windows)
- Scanning Problems (macOS)
- Scan Results Are Unsatisfactory (Windows)
- Scan Results Are Unsatisfactory (macOS)
- Cannot Print/Scan from Smartphone/Tablet

Cannot Set Correctly (Network)

- Cannot Find Printer on Check Printer Settings Screen During Setup (Windows)
- Cannot Find Printer while Using Wi-Fi
- Cannot Find Printer while Using Wired LAN
- Printer Suddenly Stopped Working for Some Reason
- Network Key (Password) Unknown
- Forgot Administrator Password of Printer
- Printer Cannot Be Used After Replacing Wireless Router or Changed Router Settings
- Message Appears on Computer During Setup
- Checking Network Information
- Restoring to Factory Defaults

Cannot Set Correctly (Installation)

- Failed to MP Drivers Installation (Windows)
- Easy-WebPrint EX Does Not Start or Easy-WebPrint EX Menu Does Not Appear (Windows)
- Updating MP Drivers in Network Environment (Windows)

Error or Message Appears

- An Error Occurs
- Message (Support Code) Appears
- Error Message Appears on PictBridge (Wi-Fi) Compliant Device
- List of Support Code for Error
- IJ Scan Utility Error Messages (Windows)
- IJ Scan Utility Lite Error Messages (macOS)
- ScanGear (Scanner Driver) Error Messages (Windows)

Operation Problems

- Network Communication Problems
- Printing Problems
- Problems while Printing/Scanning from Smartphone/Tablet
- Scanning Problems (Windows)
- Scanning Problems (macOS)
- Mechanical Problems
- Installation and Download Problems
- Errors and Messages
- If You Cannot Solve a Problem

Network Settings and Common Problems

Here are frequently asked questions on network. Select a connection method you are using, or you want to use.

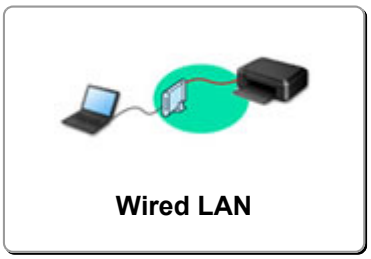

Wireless LAN

Cannot Find Printer

- Cannot Find Printer while Using Wi-Fi
- Cannot Find Printer on Check Printer Settings Screen During Setup (Windows)
- Cannot Proceed beyond Printer Connection Screen
- Printer Is Not Found by Printer Find Screen of Setup
- Searching Printer by IP Address or Host Name During Setup
- Error Occurs During Wi-Fi Setup
- Detect Same Printer Name
- Reconfiguration Method of LAN Connection/Reconfiguration Method of Wi-Fi Connection

Cannot Print or Connect

- Printer Suddenly Stopped Working for Some Reason
- Printer Cannot Be Used After Replacing Wireless Router or Changed Router Settings
- Cannot Access to Internet on Wi-Fi from Communication Device
- Connecting Printer and Wireless Router Using Easy wireless connect
- Cannot Connect Smartphone/Tablet to Wireless Router
- Error Occurs During Wi-Fi Setup
- Connects to Another Computer via LAN/Changes from USB to LAN Connection
- Cannot Print or Connect

LAN Setting Tips/Changing LAN Settings

- Network Key (Password) Unknown
- Forgot Administrator Password of Printer
- Checking Network Information
- Restoring to Factory Defaults
- Checking Wireless Router SSID/Key
- Checking Wireless Router Network Name (SSID) for Smartphone/Tablet
- Privacy Separator/SSID Separator/Network Separation Function
- Default Network Settings
- Connects to Another Computer via LAN/Changes from USB to LAN Connection
- Printing Network Settings
- Reconfiguration Method of LAN Connection/Reconfiguration Method of Wi-Fi Connection
- Checking Status Code

Printing/Scanning from Smartphone/Tablet

- Connecting Printer and Wireless Router Using Easy wireless connect
- Cannot Connect Smartphone/Tablet to Wireless Router
- Checking Wireless Router Network Name (SSID) for Smartphone/Tablet
- Setting Up Using Smartphone/Tablet
- Cannot Print/Scan from Smartphone/Tablet
- Downloading Canon PRINT Inkjet/SELPHY

Problems while Using Printer

- Message Appears on Computer During Setup
- Printer Prints Slowly
- No Ink Level Appears in Printer Status Monitor (Windows)
- Packets Are Sent Constantly (Windows)

Wireless Direct

Cannot Print or Connect

- Printer Suddenly Stopped Working for Some Reason
- Cannot Access to Internet on Wi-Fi from Communication Device
- Cannot Print or Connect

LAN Setting Tips/Changing LAN Settings

- Network Key (Password) Unknown
- Forgot Administrator Password of Printer
- Checking Network Information
- Restoring to Factory Defaults
- Default Network Settings
- Printing Network Settings
- Reconfiguration Method of LAN Connection/Reconfiguration Method of Wi-Fi Connection
- Checking Status Code

Printing/Scanning from Smartphone/Tablet

- Cannot Print/Scan from Smartphone/Tablet
- Downloading Canon PRINT Inkjet/SELPHY

Problems while Using Printer

- Message Appears on Computer During Setup
- Printer Prints Slowly
- No Ink Level Appears in Printer Status Monitor (Windows)

Wired LAN

Cannot Find Printer

- Printer Is Not Found by Printer Find Screen of Setup
- Searching Printer by IP Address or Host Name During Setup
- Cannot Find Printer while Using Wired LAN
- Detect Same Printer Name

Cannot Print or Connect

- Printer Suddenly Stopped Working for Some Reason
- Cannot Print or Connect

LAN Setting Tips/Changing LAN Settings

- Forgot Administrator Password of Printer
- Checking Network Information
- Restoring to Factory Defaults
- Default Network Settings
- Connects to Another Computer via LAN/Changes from USB to LAN Connection
- Printing Network Settings
- Reconfiguration Method of LAN Connection/Reconfiguration Method of Wi-Fi Connection
- Checking Status Code

Problems while Using Printer

- Message Appears on Computer During Setup
- Printer Prints Slowly
- No Ink Level Appears in Printer Status Monitor (Windows)
- Packets Are Sent Constantly (Windows)

Network Communication Problems

- Cannot Find Printer on Network
- Network Connection Problems
- Other Network Problems

Cannot Find Printer on Network

While performing printer setup:

- Cannot Find Printer on Check Printer Settings Screen During Setup (Windows)
- Cannot Proceed beyond Printer Connection Screen

While using printer:

- Cannot Find Printer while Using Wi-Fi

Note

- You cannot use the wireless LAN and the wired LAN at the same time.

Cannot Find Printer on Check Printer Settings Screen During Setup (Windows)

If the printer cannot be found and the **Check Printer Settings** screen appears after searching the printer by **Automatic search** on the **Search for Printers** screen, click **Redetect** and search for the printer again by the IP address on the **Search for Printers** screen.

If the printer has not been found after searching it by the IP address, check network settings.

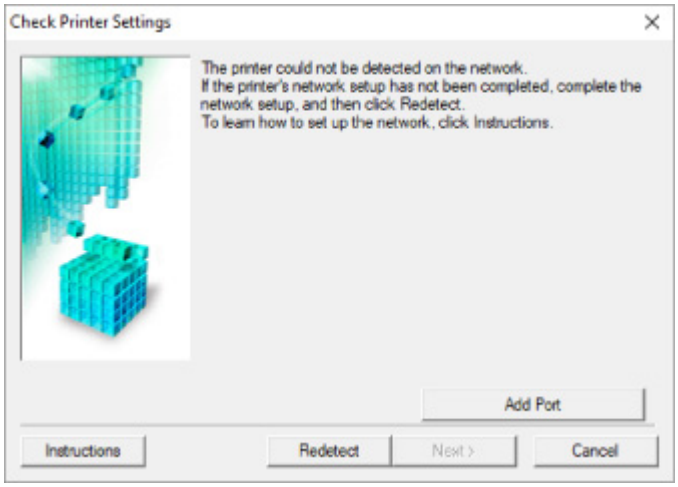

- **When using Wi-Fi:**
  - Cannot Find Printer on Check Printer Settings Screen During Wi-Fi Setup (Windows)-Checking Power Status
  - Cannot Find Printer on Check Printer Settings Screen During Wi-Fi Setup (Windows)-Checking PC Network Connection
  - Cannot Find Printer on Check Printer Settings Screen During Wi-Fi Setup (Windows)-Checking Printer's Wi-Fi Settings
  - Cannot Find Printer on Check Printer Settings Screen During Wi-Fi Setup (Windows)-Checking Wi-Fi Environment
  - Cannot Find Printer on Check Printer Settings Screen During Wi-Fi Setup (Windows)-Checking Printer's IP Address
  - Cannot Find Printer on Check Printer Settings Screen During Wi-Fi Setup (Windows)-Checking Security Software Settings
  - Cannot Find Printer on Check Printer Settings Screen During Wi-Fi Setup (Windows)-Checking Wireless Router Settings

- **When using wired LAN:**
  - Cannot Find Printer on Check Printer Settings Screen During Wired LAN Setup (Windows)-Checking LAN Cable and Router
  - Cannot Find Printer on Check Printer Settings Screen During Wired LAN Setup (Windows)-Checking PC Network Connection
  - Cannot Find Printer on Check Printer Settings Screen During Wired LAN Setup (Windows)-Checking Printer's Wired LAN Settings
  - Cannot Find Printer on Check Printer Settings Screen During Wired LAN Setup (Windows)-Checking Printer's IP Address

- Cannot Find Printer on Check Printer Settings Screen During Wired LAN Setup (Windows)- Checking Security Software Settings
- Cannot Find Printer on Check Printer Settings Screen During Wired LAN Setup (Windows)- Checking Router Settings

Cannot Find Printer on Check Printer Settings Screen During Wi-Fi Setup (Windows)-Checking Power Status

Are printer and network device (router, etc.) turned on?

Make sure the printer is turned on.

- Checking that Power Is On

Make sure network device (router, etc.) is turned on.

If printer or network device is off:

Turn on printer or network device.

It may take a while for the printer and network device to become ready for use once they are turned on. Wait a while after turning on the printer or network device, and then click **Redetect** on the **Check Printer Settings** screen to redetect the printer.

If the printer is found, follow the instructions on the screen to continue to set up network communication.

If printer and network device are on:

If the network devices are on, turn them off and on again.

If above does not solve the problem:

- Cannot Find Printer on Check Printer Settings Screen During Wi-Fi Setup (Windows)-Checking PC Network Connection

Cannot Find Printer on Check Printer Settings Screen During Wi-Fi Setup (Windows)-Checking PC Network Connection

Can you view any web pages on your computer?

Make sure the computer and network device (router, etc.) are configured and the computer is connected to the network.

If you cannot view any web pages:

Click **Cancel** on the **Check Printer Settings** screen to cancel to set up the network communication.

After that, configure the computer and network device.

For the procedures, refer to the instruction manuals supplied with the computer and network device, or contact their manufacturers.

If you can view web pages after configuring the computer and network device, try to set up the network communication from the beginning.

If above does not solve the problem:

- Cannot Find Printer on Check Printer Settings Screen During Wi-Fi Setup (Windows)-Checking Printer's Wi-Fi Settings

Cannot Find Printer on Check Printer Settings Screen During Wi-Fi Setup (Windows)-Checking Printer's Wi-Fi Settings

Is printer set to allow wireless communication?

Make sure the or icon is displayed on the touch screen.

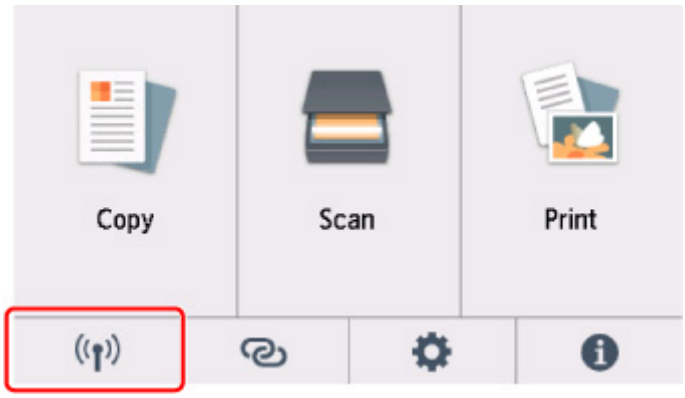

If icon is not displayed:

The printer is not set to allow wireless communication. Turn on wireless communication on the printer.

If icon is displayed:

- Cannot Find Printer on Check Printer Settings Screen During Wi-Fi Setup (Windows)-Checking Wi-Fi Environment

Q

Cannot Find Printer on Check Printer Settings Screen During Wi-Fi Setup (Windows)-Checking Wi-Fi Environment

A

Is the printer connected to the wireless router?

Use the icon on the touch screen to make sure the printer is connected to the wireless router.

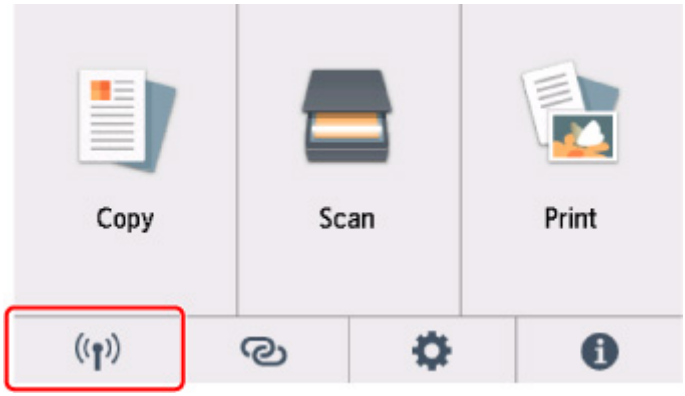

If is displayed:

- Check wireless router configuration.

  After checking the wireless router setting, make sure the printer is not placed far away from the wireless router.

  The printer can be up to 50 m (164 ft) from the wireless router indoors. Make sure the printer is close enough to the wireless router to be used.

  Place the printer and wireless router where there are no obstacles between them. Wireless communication between different rooms or floors is generally poor. Wireless communication can be impeded by building materials containing metal or concrete. If the printer cannot communicate with the computer over a Wi-Fi due to a wall, place the printer and the computer in the same room.

  In addition, if a device like a microwave oven that emits radio waves of the same frequency bandwidth as a wireless router is nearby, it may cause interference. Place the wireless router as far away from interference sources as possible.

  Note

  - Though an antenna is attached to most wireless routers, note that some of them have it inside.

- Check wireless router setting.

  The printer and wireless router should be connected using 2.4 GHz bandwidth. Make sure the wireless router for the printer's destination is configured to use 2.4 GHz bandwidth.

Important

- Note that some wireless routers distinguish network names (SSIDs) by the last alphanumeric character according to their bandwidth (2.4 GHz or 5 GHz) or purpose (for computer or game machine).

Check the network name (SSID) of the wireless router for the printer on the touch screen.

Select (**Setup**) icon, **Device settings**, **LAN settings**, and **Wi-Fi**, and then check **Network name (SSID)**.

Note

- You can also check **Network name (SSID)** by selecting the icon on the lower left and selecting **Wi-Fi**.

For details, see the instruction manual supplied with the wireless router or contact the manufacturer.

After taking measures above, click **Redetect** on the **Check Printer Settings** screen to redetect the printer.

If the printer is found, follow the instructions on the screen to continue to set up network communication.

If the printer cannot be detected, the printer is not connected to the wireless router. Connect the printer to the wireless router.

After connecting the printer to the wireless router, set up the network communication from the beginning.

If is displayed:

Cannot Find Printer on Check Printer Settings Screen During Wi-Fi Setup (Windows)-Checking Printer's IP Address

Cannot Find Printer on Check Printer Settings Screen During Wi-Fi Setup (Windows)-Checking Printer's IP Address

Is printer's IP address specified correctly?

If printer's IP address is not specified correctly, the printer may not be found. Make sure whether printer's IP address is not used for another device.

To check the printer's IP address, print out the network settings information or use the operation panel to display it.

- Display on the touch screen.

  LAN settings

- Print the network settings.

  Printing Network Settings

If the IP address is not specified correctly:

See If an error screen appears: and specify the IP address.

If the IP address is specified correctly:

Cannot Find Printer on Check Printer Settings Screen During Wi-Fi Setup (Windows)-Checking Security Software Settings

Cannot Find Printer on Check Printer Settings Screen During Wi-Fi Setup (Windows)-Checking Security Software Settings

Disable block in firewall function temporarily.

The firewall of your security software or operation system for computer may limit communication between the printer and your computer. Check the firewall setting of your security software or operation system or the message shown on your computer and disable block temporarily.

If firewall interferes with setup:

- **If message appears:**

  If a message appears warning that Canon software is attempting to access the network, set the security software to allow access.

  After allowing the software to access, click **Redetect** on the **Check Printer Settings** screen to redetect the printer.

  If the printer is found, follow the instructions on the screen to continue to set up network communication.

- **If no message appears:**

  Cancel the setup, and then set the security software to allow Canon software to access the network.

  The file **Setup.exe** or **Setup64.exe** in the **win** > **Driver** > **DrvSetup** folder on the Setup CD-ROM

  After setting the security software, redo the network communication setup from the beginning.

  After setup is completed, enable firewall.

Note

- For more on firewall settings of your operating system or security software, see instruction manual or contact its manufacturer.

If above does not solve the problem:

Cannot Find Printer on Check Printer Settings Screen During Wi-Fi Setup (Windows)-Checking Wireless Router Settings

Cannot Find Printer on Check Printer Settings Screen During Wi-Fi Setup (Windows)-Checking Wireless Router Settings

Check wireless router settings.

Check wireless router network connection settings, such as IP address filtering, MAC address filtering, encryption key, and DHCP function.

Make sure the same radio channel is assigned to the printer and the wireless router.

To check the settings of the wireless router, see the instruction manual supplied with the wireless router or contact the manufacturer.

In addition, make sure the wireless router you are using is configured to use 2.4 GHz bandwidth.

Important

- Depending on the wireless router, note that different network name (SSID) is assigned for a bandwidth (2.4 GHz or 5 GHz) or its usage (for PC or game machine) using alphanumeric characters at the end of network name (SSID).

After checking the wireless router settings, click **Redetect** on the **Check Printer Settings** screen to redetect the printer.

If the printer is found, follow the instructions on the screen to continue to set up network communication.

Cannot Find Printer on Check Printer Settings Screen During Wired LAN Setup (Windows)-Checking LAN Cable and Router

Is LAN cable connected, and are printer and router on?

Make sure the LAN cable is connected.

Make sure the printer is turned on.

- Checking that Power Is On

Make sure the router is turned on.

If LAN cable is connected and printer or network device is off:

Turn on printer or network device.

It may take a while for the printer and network device to become ready for use once they are turned on. Wait a while after turning on the printer or network device, and then click **Redetect** on the **Check Printer Settings** screen to redetect the printer.

If the printer is found, follow the instructions on the screen to continue to set up the network communication.

If LAN cable is connected and printer and network device are on:

If the printer cannot not be found after trying to redetect it, even though the printer and the network device are on:

- Cannot Find Printer on Check Printer Settings Screen During Wired LAN Setup (Windows)-Checking PC Network Connection

Cannot Find Printer on Check Printer Settings Screen During Wired LAN Setup (Windows)-Checking PC Network Connection

Can you view any web pages on your computer?

Make sure the computer and network device (router, etc.) are configured and the computer is connected to the network.

If you cannot view any web pages:

Click **Cancel** on the **Check Printer Settings** screen to cancel to set up the network communication.

After that, configure the computer and network device.

For the procedures, refer to the instruction manuals supplied with the computer and network device, or contact their manufacturers.

If you can view web pages after configuring the computer and network device, try to set up the network communication from the beginning.

If you can view web pages:

- Cannot Find Printer on Check Printer Settings Screen During Wired LAN Setup (Windows)-Checking Printer's Wired LAN Settings

Cannot Find Printer on Check Printer Settings Screen During Wired LAN Setup (Windows)-Checking Printer's Wired LAN Settings

Is printer set to allow wired communication?

Make sure the icon is displayed on the touch screen.

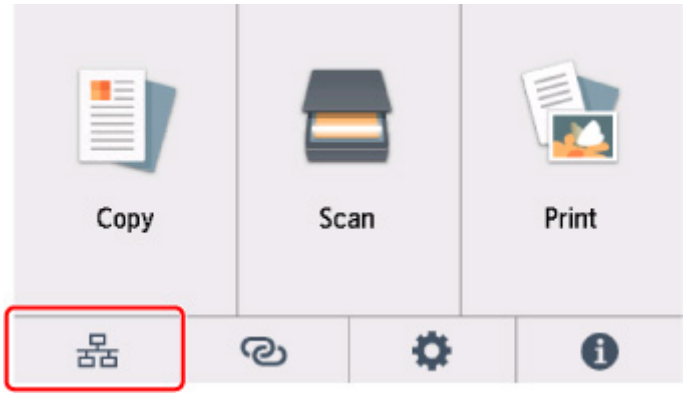

If icon is not displayed:

The printer is not set to allow wired communication. Turn on wired communication on the printer.

Once you have turned on wired communication, redo the network communication setup from the beginning.

If icon is displayed:

- Cannot Find Printer on Check Printer Settings Screen During Wired LAN Setup (Windows)-Checking Printer's IP Address

Cannot Find Printer on Check Printer Settings Screen During Wired LAN Setup (Windows)-Checking Printer's IP Address

Is printer's IP address specified correctly?

If printer's IP address is not specified correctly, the printer may not be found. Make sure whether printer's IP address is not used for another device.

To check the printer's IP Address, print out the network settings information or use the operation panel to display it.

- Display on the touch screen.

  LAN settings

- Print the network settings.

  Printing Network Settings

If the IP address is not specified correctly:

See If an error screen appears: and specify the IP address.

If the IP address is specified correctly:

Cannot Find Printer on Check Printer Settings Screen During Wired LAN Setup (Windows)-Checking Security Software Settings

Cannot Find Printer on Check Printer Settings Screen During Wired LAN Setup (Windows)-Checking Security Software Settings

Disable block in firewall function temporarily.

The firewall of your security software or operation system for computer may limit communication between the printer and your computer. Check the firewall setting of your security software or operation system or the message shown on your computer and disable block temporarily.

If firewall interferes with setup:

- **If message appears:**

  If a message appears warning that Canon software is attempting to access the network, set the security software to allow access.

  After allowing the software to access, click **Redetect** on the **Check Printer Settings** screen to redetect the printer.

  If the printer is found, follow the instructions on the screen to continue to set up the network communication.

- **If no message appears:**

  Cancel the setup, and then set the security software to allow Canon software below to access the network.

  The file **Setup.exe** or **Setup64.exe** in the **win** > **Driver** > **DrvSetup** folder on the Setup CD-ROM

  After setting the security software, redo the network communication setup from the beginning.

  After setup is completed, enable firewall.

Note

- For more on firewall settings of your operating system or security software, see instruction manual or contact its manufacturer.

If above does not solve the problem:

Cannot Find Printer on Check Printer Settings Screen During Wired LAN Setup (Windows)-Checking Router Settings

Cannot Find Printer on Check Printer Settings Screen During Wired LAN Setup (Windows)-Checking Router Settings

Check router settings.

Check router network connection settings such as IP address filtering, MAC address filtering, and DHCP function.

For more on checking the settings of the router, refer to the instruction manual supplied with the router or contact its manufacturer.

After checking the router settings, click **Redetect** on the **Check Printer Settings** screen to redetect the printer.

If the printer is found, follow the instructions on the screen to continue to set up network communication.

Cannot Proceed beyond Printer Connection Screen

If you cannot proceed beyond the **Printer Connection** screen, check the following.

Check1 Make sure USB cable is securely plugged in to printer and computer.

Connect the printer and the computer using a USB cable as the illustration below. The USB port is located at the back of the printer.

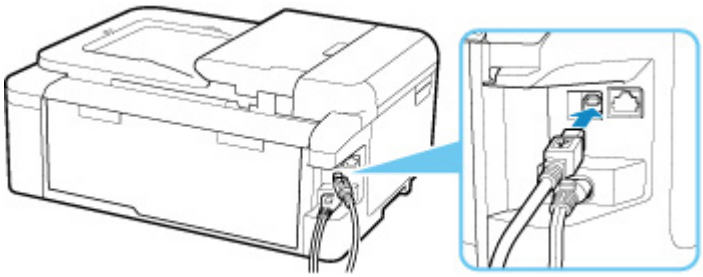

Important

- Connect the "Type-B" terminal to the printer with the notched side facing UP. For details, refer to the instruction manual supplied with the USB cable.

Check2 Follow procedure below to connect printer and computer again.

Important

- For macOS, make sure the lock icon is on the lower left of the **Printers & Scanners** screen.

  If the icon (locked) is displayed, click the icon to unlock. (The administrator name and the password are necessary to unlock.)

1. Unplug USB cable from printer and computer and connect it again.
2. Make sure no printer operation is in progress and turn off.
3. Turn on printer.

Check3 If you cannot resolve problem, follow procedure below to reinstall MP Drivers.

- For Windows:

  1. Click **Cancel**.
  2. Click **Back to Top** on **Setup Canceled** screen.
  3. Click **Exit** on **Start Setup** screen and finish setup.

4. Turn off printer.

5. Restart computer.

6. Make sure you have no application software running.

7. Perform setup on web page.

Note

- You can use the Setup CD-ROM to redo setup.

- For macOS:

1. Click **Next**.

   The screen telling you that installation has not been completed appears.

2. Click **No**.

   The screen to select application software to install appears.

3. Click **Back to Top**.

4. Click **Exit** on **Start Setup** screen.

5. Turn off printer.

6. Restart computer.

7. Make sure you have no application software running.

8. Perform setup on web page.

Cannot Find Printer while Using Wi-Fi

A

Check1 Make sure printer is turned on.

If not, make sure the printer is securely plugged in and press **ON** button to turn on.

The **ON** lamp flashes while the printer is initializing. Wait until the **ON** lamp stops flashing and remains lit.

Check2 Check the (**Network status**) icon on the touch screen.

If the icon is displayed, or only the icon is displayed, wireless LAN is disabled.

Select **LAN settings** > **Wi-Fi** > **Settings** > in this order, and select **Enable** for **Enable/disable Wi-Fi**.

If the icon is displayed, see Check 3 or later checking items to make sure whether printer setup is complete or the settings of wireless router to connect are correct.

Check3 Make sure printer setup is complete on the computer.

If it is not, perform setup.

- For Windows:

  Perform setup using the Setup CD-ROM or from the web page.

- For macOS:

  Perform setup from the web page.

Note

- IJ Network Device Setup Utility allows you to diagnose and repair the network status. Download it from the web page.
  - For Windows
  - For macOS

Check4 Make sure printer and wireless router network settings match.

Make sure the network settings of the printer (e.g. network name (SSID) or network key (password), etc.) are identical with those of the wireless router.

To check the settings of the wireless router, refer to the instruction manual provided with it or contact its manufacturer.

Note

- Use 2.4 GHz frequency band to connect to a wireless router. Match the network name (SSID) set for the printer with that for 2.4 GHz frequency band of the wireless router.

To check the network name (SSID) set for the printer, print out the network setting information.

Printing Network Settings

Note

- IJ Network Device Setup Utility allows you to diagnose and repair the network status.

  Select the link below to download IJ Network Device Setup Utility and install it.

  Checking Printer Connection Status Using IJ Network Device Setup Utility

  See below for starting up IJ Network Device Setup Utility.

  - For Windows:

    Starting Up IJ Network Device Setup Utility

  - For macOS:

    Starting Up IJ Network Device Setup Utility

Check5 Make sure the printer is not placed too far away from the wireless router.

If the distance between the printer and wireless router is too far, wireless communication becomes poor. Place the printer and wireless router close to each other.

Note

- Though an antenna is attached to most wireless routers, note that some of them have it inside.

Check6 Make sure wireless signal is strong. Monitor signal strength and move printer and wireless router as necessary.

Place the printer and wireless router where there are no obstacles between them. Wireless communication between different rooms or floors is generally poor. Wireless communication can be impeded by building materials containing metal or concrete. If the printer cannot communicate with the computer over a Wi-Fi due to a wall, place the printer and the computer in the same room.

In addition, if a device like a microwave oven that emits radio waves of the same frequency bandwidth as a wireless router is nearby, it may cause interference. Place the wireless router as far away from interference sources as possible.

Check the signal strength on the touch screen.

Using the Operation Panel

Note

- IJ Network Device Setup Utility allows you to diagnose and repair the network status.

  Select the link below to download IJ Network Device Setup Utility and install it.

  Checking Printer Connection Status Using IJ Network Device Setup Utility

  See below for starting up IJ Network Device Setup Utility.

  - For Windows:

Starting Up IJ Network Device Setup Utility

- For macOS:

  Starting Up IJ Network Device Setup Utility

Check7 Make sure the computer is connected to the wireless router.

For more on how to check the computer settings or connection status, see your computer instruction manual or contact its manufacturer.

Note

- If you use a smartphone or tablet, make sure the Wi-Fi is enabled on the device.

Check8 Make sure **Enable bidirectional support** is selected in the **Ports** sheet of the properties dialog box of the printer driver. (Windows)

If not, select it to enable bidirectional support.

Check9 Make sure security software's firewall is off.

If your security software's firewall is on, a message may appear warning you that Canon software is attempting to access the network. If this warning message appears, set security software to always allow access.

If you are using any programs that switch between network environments, check their settings. Some programs use a firewall by default.

Check10 If printer is connected to an AirPort Base Station via LAN, make sure you use alphanumeric characters for network name (SSID). (macOS)

If the problem is not resolved, redo setup.

- For Windows:

  Perform setup using the Setup CD-ROM or from the web page.

- For macOS:

  Perform setup from the web page.

Network Connection Problems

- Printer Suddenly Stopped Working for Some Reason
- Network Key (Password) Unknown
- Printer Cannot Be Used After Replacing Wireless Router or Changed Router Settings

Printer Suddenly Stopped Working for Some Reason

- Cannot Connect to a Printer after Network Configuration Changes
- Cannot Connect to a Printer via Wireless LAN (Wi-Fi)
- Cannot Connect to a Printer through Wireless Direct
- Cannot Connect to a Printer via Wired LAN
- Cannot Print/Scan through Network

Q Cannot Connect to a Printer after Network Configuration Changes

A

It may take a while for the computer to obtain an IP address, or you may need to restart your computer.

Make sure the computer has obtained a valid IP address, and try again to find the printer.

Q Cannot Connect to a Printer via Wireless LAN (Wi-Fi)

A

Check1 Check the power status of printer, network devices (e.g. wireless router), and smartphone/tablet.

- Turn on the printer or devices.
- If the power is already turned on, cycle the power switch.
- It may be necessary to resolve wireless router problems (e.g. update interval of a key, problems of DHCP update interval, energy saving mode, etc.) or to update the wireless router firmware.

For details, contact the manufacturer of your wireless router.

Check2 Can you view any web pages on your computer?

Make sure your computer is connected to the wireless router properly.

For more on checking computer settings or connection status, see the instruction manual supplied with the computer or contact the manufacturer.

Check3 Is the printer connected to the wireless router?

Use the icon on the touch screen to check the connection status between the printer and wireless router. If the icon is not displayed, Wi-Fi is disabled. Turn on wireless communication on the printer.

Check4 Make sure the printer and wireless router network settings match.

Make sure the network settings of the printer (e.g. network name (SSID) or network key (password), etc.) are identical with those of the wireless router.

To check the settings of the wireless router, refer to the instruction manual provided with it or contact its manufacturer.

Note

- Use 2.4 GHz frequency band to connect to a wireless router. Match the network name (SSID) set for the printer with that for 2.4 GHz frequency band of the wireless router.

To check the current network settings of the printer, print out the network setting information.

Printing Network Settings

Note

- IJ Network Device Setup Utility allows you to diagnose and repair the network status.

  Select the link below to download IJ Network Device Setup Utility and install it.

  Checking Printer Connection Status Using IJ Network Device Setup Utility

  See below for starting up IJ Network Device Setup Utility.

  - For Windows:

    Starting Up IJ Network Device Setup Utility

  - For macOS:

    Starting Up IJ Network Device Setup Utility

Check5 Make sure the printer is not placed too far away from the wireless router.

If the distance between the printer and wireless router is too far, wireless communication becomes poor. Place the printer and wireless router close to each other.

Note

- Though an antenna is attached to most wireless routers, note that some of them have it inside.

Check6 Make sure wireless signal is strong. Monitor signal status and move printer and wireless router as necessary.

Place the printer and wireless router where there are no obstacles between them. Wireless communication between different rooms or floors is generally poor. Wireless communication can be impeded by building materials containing metal or concrete. If the printer cannot communicate with the computer over a Wi-Fi due to a wall, place the printer and the computer in the same room.

In addition, if a device like a microwave oven that emits radio waves of the same frequency bandwidth as a wireless router is nearby, it may cause interference. Place the wireless router as far away from interference sources as possible.

Check the signal strength on the touch screen.

Using the Operation Panel

Note

- IJ Network Device Setup Utility allows you to diagnose and repair the network status.

  Select the link below to download IJ Network Device Setup Utility and install it.

  Checking Printer Connection Status Using IJ Network Device Setup Utility

See below for starting up IJ Network Device Setup Utility.

- For Windows:

  Starting Up IJ Network Device Setup Utility

- For macOS:

  Starting Up IJ Network Device Setup Utility

Check7 Make sure of the Wi-Fi channel numbers used for your computer.

You need to have the same Wi-Fi channel number that you are using for the wireless router as your computer. It is normally set in the way that you can use all the Wi-Fi channels. However, when the channels that you are using are restricted, the Wi-Fi channels do not match.

See the instruction manual provided with your computer and check the Wi-Fi channel number available for your computer.

Check8 Make sure channel set on wireless router is a usable channel as confirmed in Check 7.

If it is not, change the channel set on the wireless router.

Check9 Make sure security software's firewall is off.

If your security software's firewall is on, a message may appear warning you that Canon software is attempting to access the network. If this warning message appears, set security software to always allow access.

If you are using any programs that switch between network environments, check their settings. Some programs use a firewall by default.

Check10 If printer is connected to an AirPort Base Station via LAN, make sure you use alphanumeric characters for network name (SSID). (macOS)

If the problem is not resolved, redo setup.

- For Windows:

  Perform setup using the Setup CD-ROM or from the web page.

- For macOS:

  Perform setup from the web page.

- **Positioning:**

  Make sure there are no obstacles between the printer and the wireless router.

Q Cannot Connect to a Printer through Wireless Direct

A

Check1 Check the power status of printer and other devices (smartphone or tablet).

Turn on the printer or devices.

If the power is already turned on, cycle the power switch.

Check2 Is the icon displayed on the touch screen?

If not, Wireless Direct is disabled. Turn on Wireless Direct.

Check3 Check the settings of your device (smartphone/tablet).

Make sure Wi-Fi is enabled on your device.

For details, refer to your device's instruction manual.

Check4 Make sure printer is selected as connection for device (e.g. smartphone or tablet).

Select the network name (SSID) for Wireless Direct specified for the printer as the connection destination for devices.

Check the destination on your device.

For details, refer to your device's instruction manual or visit the manufacturer's website.

To check the network name (SSID) for Wireless Direct specified for the printer, display it using the operation panel of the printer or print out the network setting information of the printer.

- Display on the touch screen.

  LAN settings

- Print the network settings.

  Printing Network Settings

Check5 Have you entered the proper password specified for the Wireless Direct?

To check the password specified for the printer, display it using the operation panel of the printer or print out the network setting information of the printer.

- Display on the touch screen.

  LAN settings

- Print the network settings.

  Printing Network Settings

Check6 Make sure the printer is not placed too far away from the device.

If the distance between the printer and device is too far, wireless communication becomes poor. Place the printer and device close to each other.

Check7 Make sure 5 devices are already connected.

Wireless Direct does not allow more than 5 devices to be connected.

Cannot Connect to a Printer via Wired LAN

Check1 Make sure the printer is turned on.

Check2 Make sure the LAN cable is connected properly.

Make sure the printer is connected to the router with the LAN cable. If the LAN cable is loose, connect the cable properly.

If the LAN cable is connected to the WAN side of the router, connect the cable to the LAN side of the router.

If the problem is not resolved, redo setup.

- For Windows:

  Perform setup using the Setup CD-ROM or from the web page.

- For macOS:

  Perform setup from the web page.

Cannot Print/Scan through Network

Check1 Make sure the computer is connected to the wireless router.

For more on how to check the computer settings or connection status, see your computer instruction manual or contact its manufacturer.

Check2 If MP Drivers are not installed, install them. (Windows)

Install the MP Drivers using the Setup CD-ROM or install them from the Canon website.

Check3 When using Wi-Fi, make sure wireless router does not restrict which computers can access it.

For more on connecting to and setting up your wireless router, see the wireless router instruction manual or contact its manufacturer.

Note

- To check the MAC address or IP address of your computer, see Checking Computer IP Address or MAC Address.

Network Key (Password) Unknown

- WPA/WPA2 or WEP Key Set for Wireless Router Unknown, Cannot Connect
- Setting an Encryption Key

Q WPA/WPA2 or WEP Key Set for Wireless Router Unknown, Cannot Connect

A

For more on setting up a wireless router, see the instruction manual provided with the wireless router or contact its manufacturer. Make sure your computer can communicate with the wireless router.

Note

- IJ Network Device Setup Utility allows you to diagnose and repair the network status.

  Select the link below to download IJ Network Device Setup Utility and install it.

  - Checking Printer Connection Status Using IJ Network Device Setup Utility

  See below for starting up IJ Network Device Setup Utility.

  - For Windows:
    - Starting Up IJ Network Device Setup Utility
  - For macOS:
    - Starting Up IJ Network Device Setup Utility

Q Setting an Encryption Key

A

For more on setting up a wireless router, see the instruction manual provided with the wireless router or contact its manufacturer. Make sure your computer can communicate with the wireless router.

Note

- IJ Network Device Setup Utility allows you to diagnose and repair the network status.

  Select the link below to download IJ Network Device Setup Utility and install it.

  - Checking Printer Connection Status Using IJ Network Device Setup Utility

  See below for starting up IJ Network Device Setup Utility.

  - For Windows:
    - Starting Up IJ Network Device Setup Utility
  - For macOS:
    - Starting Up IJ Network Device Setup Utility

Selecting WPA, WPA2, or WPA/WPA2 is recommended for security reason. If your wireless router is compatible with WPA/WPA2, you can also use WPA2 or WPA.

- **Using WPA/WPA2 (Windows)**

  The authentication method, Wi-Fi password, and dynamic encryption type must be identical among the wireless router, the printer, and your computer.

  Enter the Wi-Fi password configured on the wireless router.

  Either TKIP (basic encryption) or AES (secure encryption) is selected automatically as the dynamic encryption method.

  For details, see If WPA/WPA2 Details Screen Appears.

  Note

  - This printer supports WPA/WPA2-PSK (WPA/WPA2-Personal) and WPA2-PSK (WPA2-Personal).

- **Using WEP**

  The length or format of the Wi-Fi password and authentication method must be identical among the wireless router, the printer, and your computer.

  To communicate with a wireless router that generates a password automatically, you must set the printer to use the password generated by the wireless router.

  - For Windows:

    When the **WEP Details** screen appears after you click **Search...** on the **Network Settings (Wi-Fi)** screen in IJ Network Device Setup Utility, follow the on-screen instructions to set the password length, format, and the password to use.

    For details, see If WEP Details Screen Appears.

  Note

  - If the printer is connected to an AirPort Base Station via LAN:

    If the printer is connected to an AirPort Base Station via a LAN, check the settings in **Wireless Security** of **AirPort Utility**.

    - Select **64 bit** if **WEP 40 bit** is selected for password length in AirPort Base Station.
    - Select **1** for the password to use. Otherwise, computer will not be able to communicate with printer via the wireless router.

Printer Cannot Be Used After Replacing Wireless Router or Changed Router Settings

When you replace a wireless router, redo the network setup for the printer according to the replaced one.

- For Windows:

  Perform setup using the Setup CD-ROM or from the web page.

- For macOS:

  Perform setup from the web page.

Note

- IJ Network Device Setup Utility allows you to diagnose and repair the network status.

  Select the link below to download IJ Network Device Setup Utility and install it.

  Checking Printer Connection Status Using IJ Network Device Setup Utility

  See below for starting up IJ Network Device Setup Utility.

  - For Windows:

    Starting Up IJ Network Device Setup Utility

  - For macOS:

    Starting Up IJ Network Device Setup Utility

If this does not solve the problem, see below.

Cannot Communicate with Printer After Enabling MAC/IP Address Filtering or Encryption Key on Wireless Router

With Encryption On, Cannot Communicate with Printer After Changing Encryption Type at Wireless Router

Cannot Communicate with Printer After Enabling MAC/IP Address Filtering or Encryption Key on Wireless Router

Check1 Check wireless router setting.

To check the wireless router setting, see the instruction manual provided with the wireless router or contact its manufacturer. Make sure the computer and the wireless router can communicate with each other under this setting.

Check2 If filtering MAC addresses or IP addresses at wireless router, check that MAC addresses or IP addresses for computer, network device, and printer are registered.

Check3 If using WPA/WPA2 key or a password, make sure encryption key for computer, network device, and printer matches key set for wireless router.

The length or format of the Wi-Fi password and authentication method must be identical among the wireless router, the printer, and your computer.

For details, see Setting an Encryption Key.

Q With Encryption On, Cannot Communicate with Printer After Changing Encryption Type at Wireless Router

A

If you change the encryption type for the printer and it subsequently cannot communicate with the computer, make sure the encryption type for the computer and the wireless router matches the type set for the printer.

- Cannot Communicate with Printer After Enabling MAC/IP Address Filtering or Encryption Key on Wireless Router

Other Network Problems

- Checking Network Information
- Restoring to Factory Defaults

Checking Network Information

- Checking Printer IP Address or MAC Address
- Checking Computer IP Address or MAC Address
- Checking Communication Between the Computer, the Printer, and the Wireless Router
- Checking Network Setting Information

Q Checking Printer IP Address or MAC Address

A

To check the printer's IP Address or MAC address, print out the network settings information or use the operation panel to display it.

- Display on the touch screen.
  - LAN settings
- Print the network settings.
  - Printing Network Settings

For Windows, you can check the network setting information on the computer screen.

- Canon IJ Network Device Setup Utility Screen

Q Checking Computer IP Address or MAC Address

A

To check the IP Address or MAC address of your computer, follow the instructions below.

- For Windows:

  1. Select **Command Prompt** as shown below.

     In Windows 10, right-click **Start** and select **Command Prompt**.

     In Windows 8.1, select **Command Prompt** from the **Start** screen. If **Command Prompt** is not displayed on the **Start** screen, select the **Search** charm and search for "**Command Prompt**".

     In Windows 7, click **Start** > **All Programs** > **Accessories** > **Command Prompt**.

  2. Enter "ipconfig/all" and press **Enter**.

     The IP address and MAC address of your computer appear. If your computer is not connected to a network, the IP address does not appear.

- For macOS:

  1. Select **System Preferences** from Apple menu, and then click **Network**.

2. Make sure network interface used by computer is selected, and then click **Advanced**.

   When you are using Wi-Fi on your computer, make sure **Wi-Fi** is selected as network interface. When you are using wired LAN, make sure **Ethernet** is selected.

3. Click **TCP/IP** to check the IP address, or click **Hardware** to check the MAC address.

Q Checking Communication Between the Computer, the Printer, and the Wireless Router

A

Perform a ping test to check if communication is taking place.

- For Windows:

  1. Select **Command Prompt** as shown below.

     In Windows 10, right-click **Start** and select **Command Prompt**.

     In Windows 8.1, select **Command Prompt** from the **Start** screen. If **Command Prompt** is not displayed on the **Start** screen, select the **Search** charm and search for "**Command Prompt**".

     In Windows 7, click **Start** > **All Programs** > **Accessories** > **Command Prompt**.

  2. Type the ping command and press **Enter**.

     The ping command is as follows: ping XXX.XXX.XXX.XXX

     "XXX.XXX.XXX.XXX" is the IP address of the target device.

     If communication is taking place, a message like the one shown below appears.

     Reply from XXX.XXX.XXX.XXX: bytes=32 time=10ms TTL=255

     If **Request timed out** appears, communication is not taking place.

- For macOS:

  1. Start **Network Utility** as shown below.

     Select **Computer** from **Go** menu of Finder, double-click **Macintosh HD** > **System** > **Library** > **CoreServices** > **Applications** > **Network Utility**.

  2. Click **Ping**.

  3. Make sure **Send only XX pings** (XX are numbers) is selected.

  4. Enter IP address of target printer or target wireless router in **Enter the network address to ping**.

5. Click **Ping**.

   "XXX.XXX.XXX.XXX" is the IP address of the target device.

   A message such as the following appears.

   64 bytes from XXX.XXX.XXX.XXX: icmp_seq=0 ttl=64 time=3.394 ms

   64 bytes from XXX.XXX.XXX.XXX: icmp_seq=1 ttl=64 time=1.786 ms

   64 bytes from XXX.XXX.XXX.XXX: icmp_seq=2 ttl=64 time=1.739 ms

   --- XXX.XXX.XXX.XXX ping statistics ---

   3 packets transmitted, 3 packets received, 0% packet loss

   If packet loss is 100%, communication is not taking place. Otherwise, computer is communicating with target device.

Q Checking Network Setting Information

A

To check the printer's network settings information, print out the network settings information or use the operation panel to display it.

- Display on the touch screen.

  LAN settings

- Print the network settings.

  Printing Network Settings

Restoring to Factory Defaults

Important

- For Windows:

  Initialization erases all network settings on the printer, making printing or scanning operation from a computer over a network impossible. To use the printer over a network again after restoring it to the factory defaults, redo setup using the Setup CD-ROM or from the web page.

- For macOS:

  Initialization erases all network settings on the printer, making printing or scanning operation from a computer over a network impossible. To use the printer over a network again after restoring it to the factory defaults, redo setup from the web page.

Initialize the network setting using the printer's operation panel.

- Reset setting

Problems while Printing/Scanning from Smartphone/Tablet

- Cannot Print/Scan from Smartphone/Tablet

Cannot Print/Scan from Smartphone/Tablet

If you cannot print/scan from your smartphone/tablet, it is possible that your smartphone/tablet cannot communicate with the printer.

Check the cause of your problem according to the connection method.

- Cannot Communicate with Printer over Wireless LAN
- Cannot Communicate with Printer while It Is in Wireless Direct

Note

- For problems on printing with other connection methods or more on performing settings of each connection method:
  - Using PIXMA/MAXIFY Cloud Link
  - Printing from iOS Device (AirPrint)

Q Cannot Communicate with Printer over Wireless LAN

A

If your smartphone/tablet cannot communicate with the printer, check the following.

Check1 Check the power status of printer, network devices (e.g. wireless router), and smartphone/tablet.

- Turn on the printer or devices.
- If the power is already turned on, cycle the power switch.
- It may be necessary to resolve wireless router problems (e.g. update interval of a key, problems of DHCP update interval, energy saving mode, etc.) or to update the wireless router firmware.

For details, contact the manufacturer of your wireless router.

Check2 Check the settings of your device (smartphone/tablet).

Make sure Wi-Fi is enabled on your device.

For details, refer to your device's instruction manual.

Check3 Is the printer connected to the wireless router?

Use the icon on the touch screen to check the connection status between the printer and wireless router. If the icon is not displayed, Wi-Fi is disabled. Turn on wireless communication on the printer.

Check4 Are network settings of printer identical with those of wireless router?

Make sure the network settings of the printer (e.g. network name (SSID) or network key (password), etc.) are identical with those of the wireless router.

To check the settings of the wireless router, refer to the instruction manual provided with it or contact its manufacturer.

To check the current network settings of the printer, print out the network setting information.

- Printing Network Settings

Note

- IJ Network Device Setup Utility allows you to diagnose and repair the network status.

  Select the link below to download IJ Network Device Setup Utility and install it.

  - Checking Printer Connection Status Using IJ Network Device Setup Utility

  See below for starting up IJ Network Device Setup Utility.

  - For Windows:
    - Starting Up IJ Network Device Setup Utility
  - For macOS:
    - Starting Up IJ Network Device Setup Utility

Check5 Are network settings of your smartphone/tablet identical with those of wireless router?

Make sure the network settings of the printer (e.g. network name (SSID) or network key (password), etc.) are identical with those of the wireless router.

To check the settings of your smartphone/tablet, refer to the instruction manual provided with it.

If the network settings of your smartphone/tablet are not identical with those of the wireless router, change the network settings of it to match with those of the wireless router.

Check6 Make sure the printer is not placed too far away from the wireless router.

If the distance between the printer and wireless router is too far, wireless communication becomes poor. Place the printer and wireless router close to each other.

Note

- Though an antenna is attached to most wireless routers, note that some of them have it inside.

Check7 Make sure wireless signal is strong. Monitor signal status and move printer and wireless router as necessary.

Place the printer and wireless router where there are no obstacles between them. Wireless communication between different rooms or floors is generally poor. Wireless communication can be impeded by building materials containing metal or concrete. If the printer cannot communicate with the computer over a Wi-Fi due to a wall, place the printer and the computer in the same room.

In addition, if a device like a microwave oven that emits radio waves of the same frequency bandwidth as a wireless router is nearby, it may cause interference. Place the wireless router as far away from interference sources as possible.

Check the signal strength on the touch screen.

- Using the Operation Panel

Note

- IJ Network Device Setup Utility allows you to diagnose and repair the network status.

Select the link below to download IJ Network Device Setup Utility and install it.

- Checking Printer Connection Status Using IJ Network Device Setup Utility

See below for starting up IJ Network Device Setup Utility.

- For Windows:
  - Starting Up IJ Network Device Setup Utility
- For macOS:
  - Starting Up IJ Network Device Setup Utility

Q Cannot Communicate with Printer while It Is in Wireless Direct

A

If your smartphone/tablet cannot communicate with the printer in the Wireless Direct, check the following.

Check1 Check the power status of printer and other devices (smartphone or tablet).

Turn on the printer or devices.

If the power is already turned on, cycle the power switch.

Check2 Is the icon displayed on the touch screen?

If not, Wireless Direct is disabled. Turn on Wireless Direct.

Check3 Check the settings of your device (smartphone/tablet).

Make sure Wi-Fi is enabled on your device.

For details, refer to your device's instruction manual.

Check4 Make sure printer is selected as connection for device (e.g. smartphone or tablet).

Select the network name (SSID) for Wireless Direct specified for the printer as the connection destination for devices.

Check the destination on your device.

For details, refer to your device's instruction manual or visit the manufacturer's website.

To check the network name (SSID) for Wireless Direct specified for the printer, display it using the operation panel of the printer or print out the network setting information of the printer.

- Display on the touch screen.
  - LAN settings
- Print the network settings.
  - Printing Network Settings

Check5 Have you entered the proper password specified for the Wireless Direct?

To check the password specified for the printer, display it using the operation panel of the printer or print out the network setting information of the printer.

- Display on the touch screen.

  LAN settings

- Print the network settings.

  Printing Network Settings

Check6 Make sure the printer is not placed too far away from the device.

If the distance between the printer and device is too far, wireless communication becomes poor. Place the printer and device close to each other.

Check7 Make sure 5 devices are already connected.

Wireless Direct does not allow more than 5 devices to be connected.

Printing Problems

- Printer Does Not Print
- Ink Does Not Come Out
- Paper Does Not Feed Properly/"No Paper" Error
- Cannot Print on the Disc Label
- Printout Results Are Unsatisfactory

Q

Printer Does Not Print

A

Check1 Make sure printer is turned on.

If not, make sure the printer is securely plugged in and press **ON** button to turn on.

The **ON** lamp flashes while the printer is initializing. Wait until the **ON** lamp stops flashing and remains lit.

Note

- If you are printing large data such as photos or other graphics, printing may take longer to start. The **ON** lamp flashes while the computer is processing data and sending it to the printer. Wait until printing starts.

Check2 Make sure printer is properly connected to computer.

If you are using a USB cable, make sure it is securely connected to both the printer and the computer. When the USB cable is securely plugged in, check the following:

- If you are using a relay device such as a USB hub, disconnect it, connect the printer directly to the computer, and retry the printing. If printing starts normally, there is a problem with the relay device. Contact the vendor of the relay device.
- There could also be a problem with the USB cable. Replace the USB cable and retry the printing.

If you use the printer over a LAN, make sure the printer is correctly set up for network use.

- Cannot Find Printer while Using Wi-Fi
- Cannot Find Printer while Using Wired LAN

Note

- IJ Network Device Setup Utility allows you to diagnose and repair the network status. Download it from the web page.
  - For Windows
  - For macOS

Check3 Make sure paper settings match information set for rear tray or cassette.

If the paper settings do not match the information set for the rear tray or the cassette, an error message appears on the touch screen. Follow the instructions on the touch screen to solve the problem.

Note

- You can select whether the message which prevents misprinting is displayed.
  - To change the message view setting when printing or copying using the printer's operation panel:
    - Feed settings
  - To change the message view setting when printing using the printer driver:
    - Changing the Printer Operation Mode (Windows)

Changing the Printer Operation Mode (macOS)

Check4 If printing from a computer, delete jobs stuck in print queue.

- For Windows:

  Deleting the Undesired Print Job

- For macOS:

  Deleting the Undesired Print Job

Check5 Make sure that the paper output tray is at the normal print position.

When you do not use the multi-purpose tray, pull the paper output tray out to the front side until it stops and select **OK** on the touch screen.

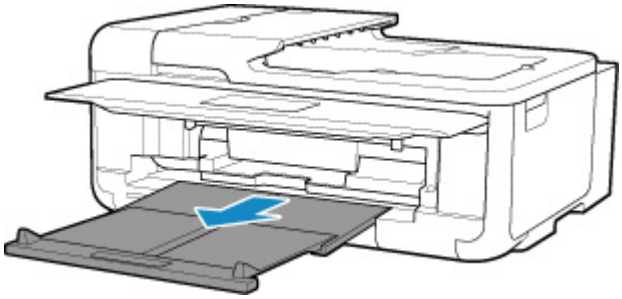

Check6 Is your printer's printer driver selected when printing?

The printer will not print properly if you are using a printer driver for a different printer.

- For Windows:

  Make sure "Canon XXX series" (where "XXX" is your printer's name) is selected in the Print dialog box.

  Note

  - If multiple printers are registered to your computer, select **Set as Default Printer** for a printer to make the one selected by default.

- For macOS:

  Make sure your printer's name is selected in **Printer** in the Print dialog.

  Note

  - If multiple printers are registered to your computer, select **Set as Default Printer** from **System Preferences** > **Printers & Scanners** for a printer to make the one selected by default.

Check7 Are you trying to print a large data file? (Windows)

If you are trying to print a large file, it takes a long time to start printing.

If the printer does not start printing after a certain period of time, select **On** for **Prevention of Print Data Loss**.

For details, refer to Page Setup Tab Description.

Important

- Selecting **On** for **Prevention of Print Data Loss** may reduce print quality.

- After printing is completed, select **Off** for **Prevention of Print Data Loss**.

Check8 If printing from a computer, restart the computer.

Restart the computer and try printing again.

Ink Does Not Come Out

Check1 Make sure of the estimated ink levels in the ink tanks.

Check the ink status on the touch screen.

Checking Ink Status on the Touch Screen

Check2 Are the orange tape and plastic wrap still on the ink tank?

Make sure all the protective plastic wrap is peeled off to expose the Y-vent area, as shown below (A).

If the orange tape remains on the ink tank (B), peel it off.

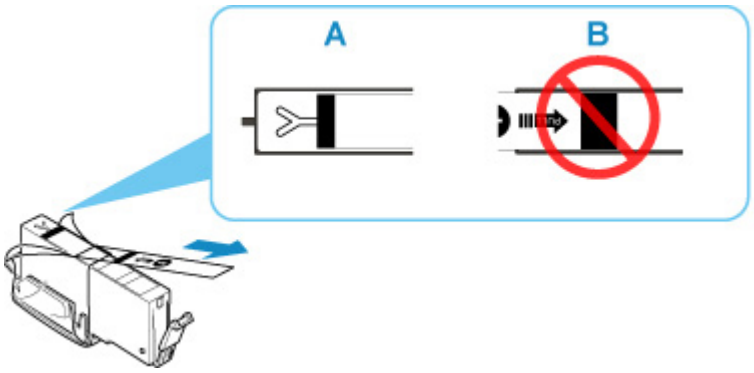

Check3 Are the print head nozzles clogged?

Print the nozzle check pattern to determine whether the ink ejects properly from the print head nozzles.

For details on printing the nozzle check pattern, print head cleaning, and print head deep cleaning, see If Printing Is Faint or Uneven.

- If nozzle check pattern is not printed correctly:

  Check if the ink tank for the problem color is empty.

  If the ink tank is not empty, perform print head cleaning and try printing the nozzle check pattern again.

- If problem is not resolved after performing print head cleaning twice:

  Perform print head deep cleaning.

  If the problem is not resolved after performing print head deep cleaning, turn off the printer and perform print head deep cleaning again 24 hours later.

- If problem is not resolved after performing print head deep cleaning twice:

  If print head deep cleaning does not resolve the problem, the print head may be damaged. Contact your nearest Canon service center to request a repair.

Paper Does Not Feed Properly/"No Paper" Error

A

Check1 Make sure paper is loaded.

- Loading Paper

Check2 When loading paper, consider the following.

- When loading two or more sheets of paper, align the edges of the sheets before loading the paper.
- When loading two or more sheets of paper, make sure the paper stack does not exceed the paper load limit.

  However, paper may not feed correctly at the maximum capacity, depending on the type of paper or environmental conditions (very high or low temperature and humidity). In such cases, reduce the amount of paper you load at a time to less than half of the paper load limit.
- Always load the paper in portrait orientation, regardless of the printing orientation.
- When you load the paper on the rear tray, place the print side facing UP and align the right and left paper guides with the paper stack.

  - Loading Paper
- In the cassette, be sure to load only plain paper.
- When you load the paper on the cassette, place the print side facing DOWN and align the right/left/front paper guides with the paper stack.

  - Loading Paper

Check3 Is paper too thick or curled?

- Unsupported Media Types

Check4 When loading envelopes, consider the following.

When printing on envelopes, see Loading Envelopes in Rear Tray, and prepare the envelopes before printing.

Once you have prepared the envelopes, load them in portrait orientation. If the envelopes are placed in landscape orientation, they will not feed properly.

Check5 Make sure media type and paper size settings match with loaded paper.

Check6 Make sure that there are not any foreign objects in the rear tray.

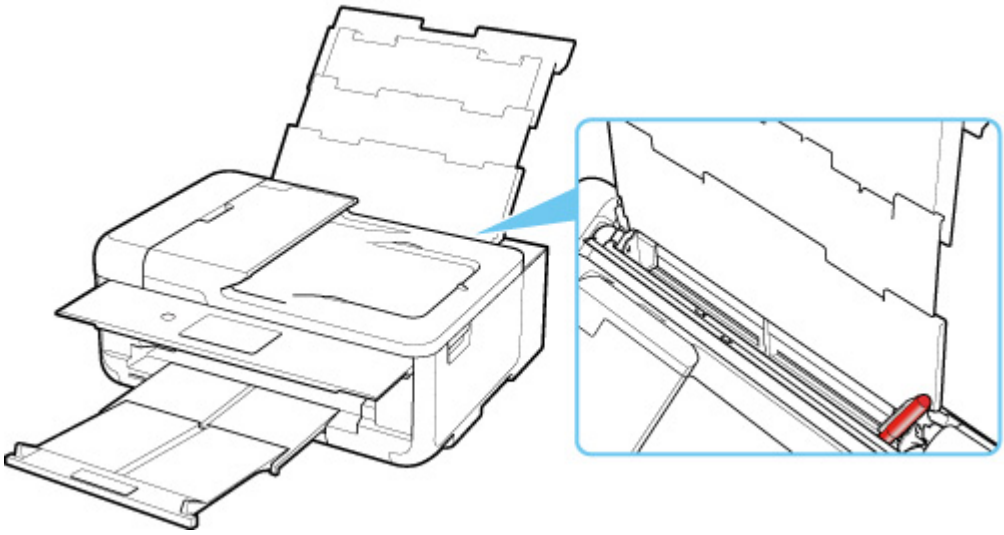

If the paper tears in the rear tray, see List of Support Code for Error (Paper Jams) to remove it.

If there are any foreign objects in the rear tray, be sure to turn off the printer, unplug it from the power supply, then remove the foreign object.

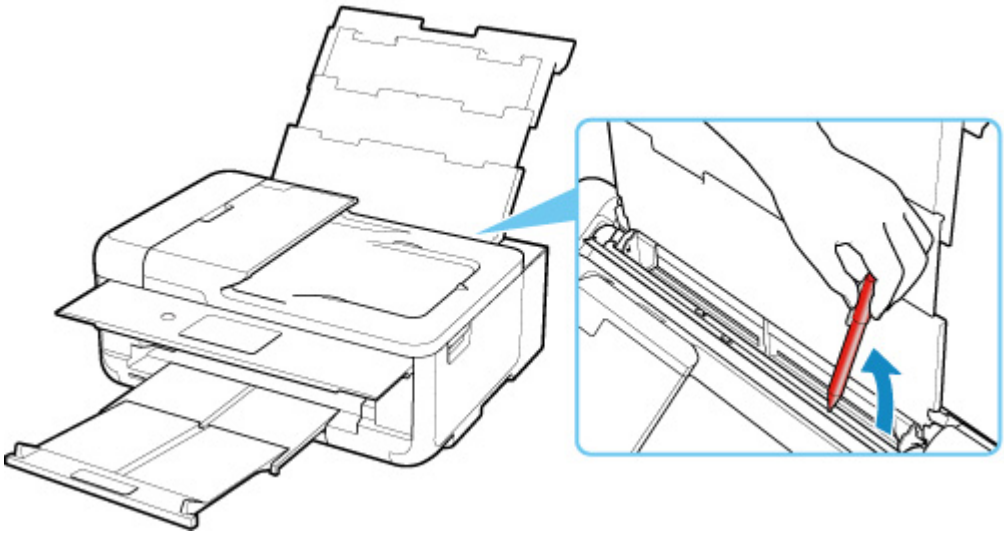

Note

- If the feed slot cover is opened, close it slowly.

Check7 Clean paper feed roller.

Cleaning Paper Feed Rollers

Note

- Cleaning the paper feed roller abrades it, so do this only when necessary.

Check8 If two or more sheets of paper feed from cassette at once, clean inside of cassette.

Cleaning Cassette Pads

Check9 Are transport unit cover and rear cover attached properly?

See Rear View for the positions of the transport unit cover and the rear cover.

If the measures above do not solve the problem, contact your nearest Canon service center to request a repair.

Cannot Print on the Disc Label

- Disc Label Printing Does Not Start
- Multi-Purpose Tray Does Not Feed Properly
- Multi-Purpose Tray Jammed

Q Disc Label Printing Does Not Start

A

Check1 Is multi-purpose tray placed properly?

Place the multi-purpose tray properly again and tap **OK** on the touch screen.

Use the multi-purpose tray supplied with this printer.

For more on placing the multi-purpose tray, see Placing a Printable Disc.

Check2 Is printable disc placed on multi-purpose tray?

Place the printable disc on the multi-purpose tray properly and tap **OK** on the touch screen.

Use the multi-purpose tray supplied with this printer.

For more on placing the multi-purpose tray, see Placing a Printable Disc.

Check3 Has time elapsed since you placed the multi-purpose tray?

If a certain period of time has elapsed since you placed the multi-purpose tray, it may be ejected.

Follow the instructions on the touch screen and try the operation again.

Q Multi-Purpose Tray Does Not Feed Properly

A

Check1 Is multi-purpose tray placed properly?

Place the multi-purpose tray properly again and tap **OK** on the touch screen.

Use the multi-purpose tray supplied with this printer.

For more on placing the multi-purpose tray, see Placing a Printable Disc.

Check2 Unrecognizable printable disc may be placed.

Canon recommends that you use printable discs specially processed to be printed on by an inkjet printer.

Q Multi-Purpose Tray Jammed

A

Pull out the multi-purpose tray gently.

If the multi-purpose tray cannot be pulled out, cycle the power switch. The multi-purpose tray will automatically be ejected.

When the multi-purpose tray is pulled out, place the multi-purpose tray again and retry printing. For more on placing the multi-purpose tray, see Placing a Printable Disc.

If the multi-purpose tray is still jammed, check if there is a problem with the printable disc.

Multi-Purpose Tray Does Not Feed Properly

Q

Printout Results Are Unsatisfactory

A

If the print results are unsatisfactory due to white streaks, misaligned/distorted lines, or uneven colors, check the paper and print quality settings first.

Check1 Do page size and media type settings match size and type of loaded paper?

If these settings do not match, it is not possible to obtain the proper result.

If you are printing a photograph or an illustration, an incorrect paper type setting may reduce the quality of the printout color.

Also, if you print with an incorrect paper type setting, the printed surface may be scratched.

In borderless printing, uneven coloring may occur depending on the combination of the paper type setting and the loaded paper.

The method for checking the paper and print quality settings differs depending on what you are using your printer for.

- Copying/Printing from memory card

  Check the settings using the operation panel.

  - Setting Items for Copying
  - Setting Items for Photo Printing Using Operation Panel

- Printing from your computer

  Check the settings using the printer driver.

  - Basic Printing Setup

- Printing from a PictBridge (Wi-Fi) compliant device

  Check the settings on your PictBridge (Wi-Fi) compliant device or using the operation panel.

  - PictBridge (Wi-Fi) Print Settings
  - PictBridge settings

- Printing from your smartphone/tablet using Canon PRINT Inkjet/SELPHY

  Check the settings on Canon PRINT Inkjet/SELPHY.

  - Print Easily from a Smartphone or Tablet with Canon PRINT Inkjet/SELPHY

Check2 Make sure appropriate print quality is selected (see list above).

Select a print quality suited to the paper and to what you are printing. If you notice blurs or uneven colors, increase the print quality setting and retry the printing.

Note

- When printing from a PictBridge (Wi-Fi) compliant device, set the print quality setting using the operation panel.

This setting cannot be made on the PictBridge (Wi-Fi) compliant device.

Check3 If problem is not resolved, check also the sections below.

See also the sections below:

- Printouts Are Blank/Blurry or Fuzzy/Inaccurate or Bleeding Colors/Streaks or Lines
- Lines Are Misaligned/Distorted
- Paper Is Smudged / Printed Surface Is Scratched
- Vertical Line Next to Image
- Cannot Complete Printing
- Part of Page Is Not Printed (Windows)
- Lines Incomplete or Missing (Windows)
- Images Incomplete or Missing (Windows)
- Ink Blots / Paper Curl
- Back of Paper Is Smudged
- Uneven or Streaked Colors

Q

Printouts Are Blank/Blurry or Fuzzy/Inaccurate or Bleeding Colors/ Streaks or Lines

Printing Is Blurry

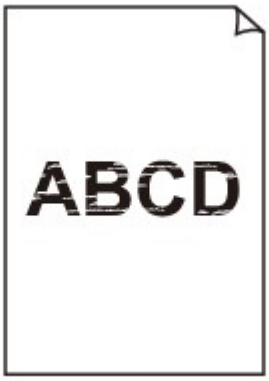

Colors Are Wrong

White Streaks Appear

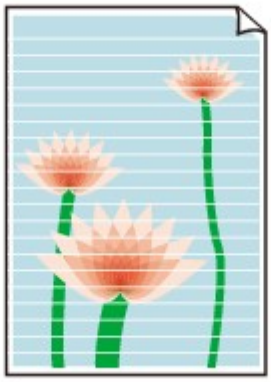

A

Check1 Check paper and print quality settings.

- Printout Results Are Unsatisfactory

Check2 Check status of ink tanks. Replace ink tank if ink has run out.

- Replacing Ink Tanks

Check3 Are the orange tape and plastic wrap still on the ink tank?

Make sure all the protective plastic wrap is peeled off to expose the Y-vent area, as shown below (A).

If the orange tape remains on the ink tank (B), peel it off.

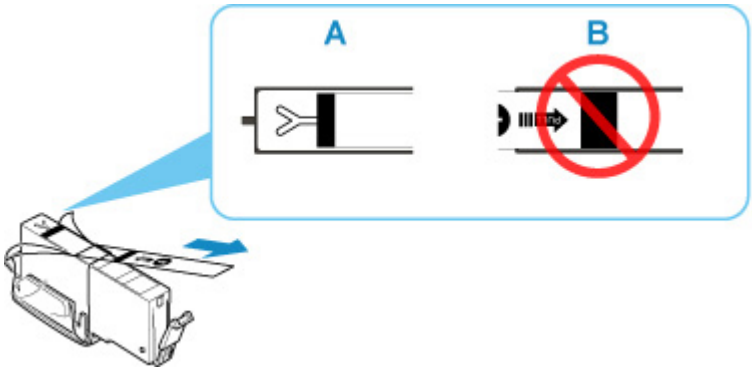

Check4 Are the print head nozzles clogged?

Print the nozzle check pattern to determine whether the ink ejects properly from the print head nozzles.

For details on printing the nozzle check pattern, print head cleaning, and print head deep cleaning, see If Printing Is Faint or Uneven.

- If nozzle check pattern is not printed correctly:

  Check if the ink tank for the problem color is empty.

  If the ink tank is not empty, perform print head cleaning and try printing the nozzle check pattern again.

- If problem is not resolved after performing print head cleaning twice:

Perform print head deep cleaning.

If the problem is not resolved after performing print head deep cleaning, turn off the printer and perform print head deep cleaning again 24 hours later.

- If problem is not resolved after performing print head deep cleaning twice:

  If print head deep cleaning does not resolve the problem, the print head may be damaged. Contact your nearest Canon service center to request a repair.

Check5 When using paper with one printable surface, check the correct printable side of the paper.

Printing on the wrong side of such paper may cause unclear prints or prints with reduced quality.

When you load paper on the rear tray, load paper with the printable side facing up. When you load paper in the cassette, load paper with the printable side facing down.

Refer to the instruction manual supplied with the paper for detailed information on the printable side.

- **When copying, see also the sections below:**

Check6 Is platen glass or glass of ADF dirty?

Clean the platen glass or the glass of ADF.

- Cleaning Platen and Document Cover
- Cleaning the ADF (Auto Document Feeder)

Note

- If the glass of ADF is dirty, black streaks appear on the paper as shown below.

Check7 Make sure original is properly loaded on platen or ADF.

When you load the original on the platen, load it with the side to be copied facing down.

When you load the original on the ADF, load it with the side to be copied facing up.

- Loading Originals

Check8 Is copy source a printed paper by printer?

If you use a printout done by this printer as the original, print quality may be reduced depending on the condition of the original.

Print from the printer directly, or reprint from the computer if you can reprint from it.

Q

Lines Are Misaligned/Distorted

A

Check1 Check paper and print quality settings.

- Printout Results Are Unsatisfactory

Check2 Perform print head alignment.

If printed lines are misaligned/distorted or print results are otherwise unsatisfactory, adjust the print head position.

- Aligning the Print Head

Note

- If the problem is not resolved after performing the print head alignment, perform print head alignment manually from your computer.
  - For Windows:
    - Adjusting the Print Head Position Manually
  - For macOS:
    - Adjusting Print Head Position

Check3 Increase print quality and try printing again.

Increasing the print quality using the operation panel or the printer driver may improve the print result.

Q

Paper Is Smudged / Printed Surface Is Scratched

Paper Is Smudged

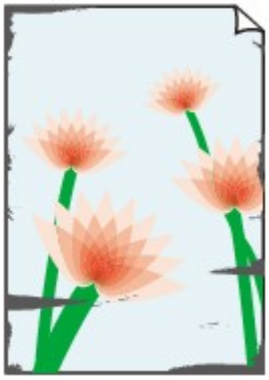

Smudged Edges

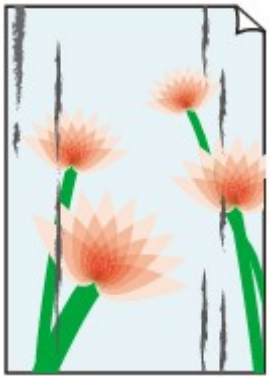

Smudged Surface

Printed Surface Is Scratched

A

Check1 Check paper and print quality settings.

- Printout Results Are Unsatisfactory

Check2 Check paper type.

Make sure you are using the right paper for what you are printing.

- Supported Media Types

Check3 Correct curl before loading paper.

When using Photo Paper Plus Semi-gloss, even if the sheet is curled, load one sheet at a time as it is. Rolling this paper in the opposite direction to flatten it may crack the paper surface and reduce the print quality.

We recommend putting unused paper back into the package and storing it flat.

- **Plain Paper**

  Turn the paper over and reload it to print on the other side.

- **Other Paper such as envelope**

  If the paper corners curl more than 0.1 inch / 3 mm (A) in height, the paper may smudge or may not feed properly. Follow the instructions below to correct the paper curl.

1. Roll up paper in opposite direction to paper curl as shown below.

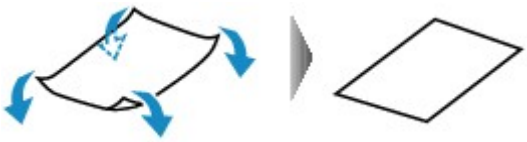

2. Check that paper is now flat.

   We recommend printing curl-corrected paper one sheet at a time.

Note

- Depending on paper type, the paper may smudge or may not feed properly even if it is not curled inward. Follow the instructions below to curl the paper outward up to 0.1 inch / 3 mm (B) in height before printing. This may improve the print result.

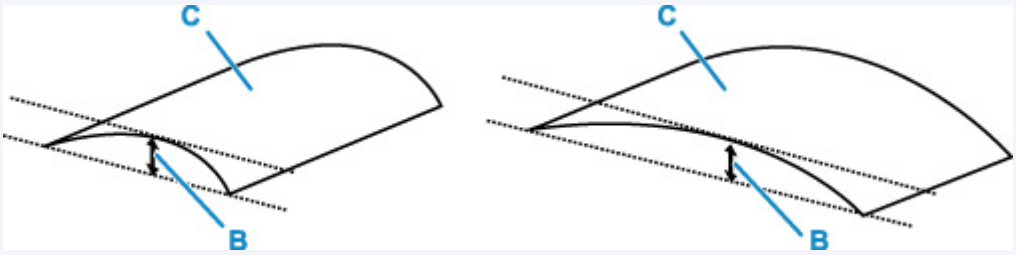

(C) Print side

We recommend feeding paper that has been curled outward one sheet at a time.

Check4 Set printer to prevent paper abrasion.

Adjusting the setting to prevent paper abrasion will widen the clearance between the print head and the paper. If you notice abrasion even with the media type set correctly to match the paper, set the printer to prevent paper abrasion using the operation panel or the computer.

This may reduce the print speed.

* Once you have finished printing, undo this setting. Otherwise, it will apply to subsequent print jobs.

- From operation panel

  Touch the **HOME** button, select (**Setup**) icon, **Settings**, **Device settings**, and **Print settings**, and then set **Prevent paper abrasion** to **ON**.

  Changing Settings from Operation Panel

- From computer
  - For Windows:

1. Check that printer is turned on.

2. Open Canon IJ Printer Assistant Tool.

   Maintenance Tab Description

3. Select **Select Printer...** and select printer you are using from pulldown menu and select **OK**.

4. Select **Custom Settings**.

5. Select **Prevent paper abrasion** check box and click **OK**.

- For macOS:

  Adjust the setting to prevent paper abrasion from Remote UI.

  Opening Remote UI for Maintenance

Check5 If brightness is set low, increase brightness setting and try printing again.

If you are printing with a low brightness setting on plain paper, the paper may absorb too much ink and become wavy, causing paper abrasion.

- Printing from your computer (Windows)

  Check the brightness setting in the printer driver.

  Adjusting Brightness

- Copying

  Setting Items for Copying

Check6 Is platen glass or glass of ADF dirty?

Clean the platen glass or the glass of ADF.

Cleaning Platen and Document Cover

Cleaning the ADF (Auto Document Feeder)

Note

- If the glass of ADF is dirty, black streaks appear on the paper as shown below.

Check7 Is paper feed roller dirty?

Clean paper feed roller.

Cleaning Paper Feed Rollers

Note

- Cleaning the paper feed roller abrades it, so do this only when necessary.

Check8 Is inside of printer dirty?

During duplex printing, ink may stain the inside of the printer, smudging the printout.

Perform bottom plate cleaning to clean inside of printer.

Cleaning Inside the Printer (Bottom Plate Cleaning)

Note

- To prevent staining inside the printer, be sure to set the correct paper size.

Check9 Set longer ink drying time.

This allows the printed surface to dry, preventing smudges and scratches.

- For Windows:

  1. Check that printer is turned on.
  2. Open Canon IJ Printer Assistant Tool.

     Maintenance Tab Description
  3. Select **Select Printer...** and select printer you are using from pulldown menu and select **OK**.
  4. Select **Custom Settings**.
  5. Drag **Ink Drying Wait Time** slide bar to set the wait time and click **OK**.
  6. Check message and click **OK**.

- For macOS:

  Set the waiting time using Remote UI.

  Changing the Printer Operation Mode

Q

Vertical Line Next to Image

A

Check Is loaded paper size correct?

If the loaded paper is larger than the size you specified, a vertical line may appear in the margin.

Set the paper size to match the loaded paper.

Printout Results Are Unsatisfactory

Note

- The direction of the vertical line pattern may vary depending on the image data or the print setting.
- This printer performs automatic cleaning when necessary to keep printouts clean. A small amount of ink is ejected for cleaning.

  Although the ink is normally ejected onto the ink absorber at the outer edge of the paper, it may get onto the paper if the loaded paper is larger than the set size.

Scanning Problems (macOS)

➤ Scanning Problems

Scanning Problems

- Scanner Does Not Work
- Scanner Driver Does Not Start

Scanner Does Not Work

Check 1 Check that your scanner or printer is turned on.

Check 2 With network connection, check the connection status and reconnect as needed.

Check 3 With USB connection, connect the USB cable to a different USB port on the computer.

Check 4 If the USB cable is connected to a USB hub, remove it from the USB hub and connect it to a USB port on the computer.

Check 5 Restart the computer.

Check 6 To scan from the printer's operation panel with USB connection, click **Scan-from-Operation-Panel Settings** in the **Settings (General Settings)** dialog, and then check that the following checkboxes are selected.

- Your scanner or printer
- **Enables scanning from the operation panel**

Scanner Driver Does Not Start

Check 1 Make sure the application software supports AirPrint.

Check 2 Select your scanner or printer on the application's menu.

Note

- The operation may differ depending on the application.

Check 3 Scan and save images with IJ Scan Utility Lite and open the files in your application.

Check 4 Your scanner may be locked. (Personal scanners only)

If IJ Scan Utility Lite or the application is running, exit it. Slide the scanner lock switch to the release position ( ), then reconnect the USB cable.

Mechanical Problems

- Printer Does Not Turn On
- Printer Turns Off Unexpectedly or Repeatedly
- USB Connection Problems
- Cannot Communicate with Printer via USB
- Wrong Language Appears in Touch Screen

Q

Printer Does Not Turn On

A

Check1 Press **ON** button.

Check2 Make sure power plug is securely connected to printer, and then turn on again.

Check3 Unplug printer, leave it for at least 2 minutes, and then plug it back in and turn on again.

If this does not solve the problem, contact your nearest Canon service center to request a repair.

Printer Turns Off Unexpectedly or Repeatedly

Check If printer is set to turn off automatically after a certain time, disable this setting.

If you have set the printer to turn off automatically after a specified time, the power will shut off by itself once that time has elapsed.

- To disable the setting from the operation panel:

  1. Check that printer is turned on.
  2. Select (**Setup**) on Home screen.
  3. Select **ECO**.
  4. Select **Energy saving settings**.
  5. Check displayed message and select **Next**.
  6. Select **Auto power off**.
  7. Select **Never**.
  8. Select **OK**.

     The setting is disabled.

- To disable the setting from the computer:

  For Windows, use Canon IJ Printer Assistant Tool or ScanGear (scanner driver) to disable the setting.

  Follow the procedure below to disable the setting using Canon IJ Printer Assistant Tool.

  1. Open Canon IJ Printer Assistant Tool.

     Maintenance Tab Description

  2. Select **Select Printer...** and select printer you are using from pulldown menu and select **OK**.
  3. Select **Auto Power**.

4. Select **Disable** for **Auto Power Off**.

5. Select **OK**.

6. Select **OK** on the displayed screen.

   The setting to shut off the power automatically is disabled.

Note

- Refer to below to disable the setting from ScanGear (scanner driver).

  Scanner Tab

USB Connection Problems

Q Printing or Scanning Is Slow/Hi-Speed USB Connection Does Not Work/"This device can perform faster" Message Appears (Windows)

A

If your system environment does not support Hi-Speed USB, the printer operates at the slower speed of USB 1.1. In this case, the printer works properly but printing or scanning speed may slow down due to the communication speed.

Check Check following to make sure your system environment supports Hi-Speed USB connection.

- Does the USB port on your computer support Hi-Speed USB connection?
- Does the USB cable or the USB hub support Hi-Speed USB connection?

  Be sure to use a certified Hi-Speed USB cable. We recommend that the USB cable be no longer than 10 feet / 3 meters or so.
- Is the Hi-Speed USB driver working properly on your computer?

  Make sure the latest Hi-Speed USB driver is working properly and obtain and install the latest version of the Hi-Speed USB driver for your computer, if necessary.

Important

- For more information, contact the manufacturer of your computer, USB cable, or USB hub.

Q

Cannot Communicate with Printer via USB

A

Check1 Make sure printer is turned on.

Check2 Connect USB cable properly.

As the illustration below, the USB port is at the back of the printer.

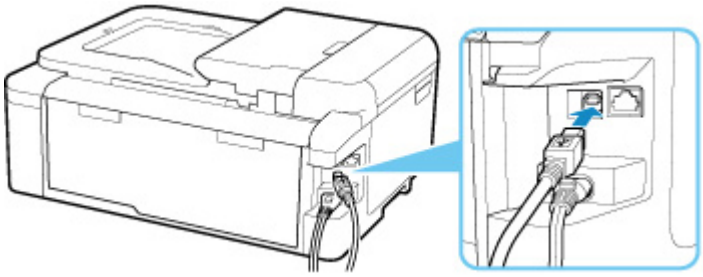

Important

- Connect the "Type-B" terminal to the printer with the notched side facing UP. For details, refer to the instruction manual supplied with the USB cable.

Check3 Make sure **Enable bidirectional support** is selected in the **Ports** sheet of the properties dialog box of the printer driver. (Windows)

If not, select it to enable bidirectional support.

- Opening Printer Driver's Setup Screen

Wrong Language Appears in Touch Screen

Follow the instructions below to select your language.

1. Press **HOME** button and wait a little.
2. Select (**Setup**) icon.

   Using the Operation Panel

3. Select .
4. Select sixth setting item from top.
5. Select a language for touch screen.
6. Select button on lower left.

Installation and Download Problems

- Failed to MP Drivers Installation (Windows)
- Updating MP Drivers in Network Environment (Windows)

Failed to MP Drivers Installation (Windows)

- **If installation does not start when you insert Setup CD-ROM:**

  Follow the instructions below to start the installation.

  1. Make the following settings.
     - In Windows 10, click **Start** > **File Explorer**, and then click **This PC** from list on left.
     - In Windows 8.1, select **Explorer** icon in **Taskbar** on **Desktop**, and then select **This PC** from list on left.
     - In Windows 7, click **Start**, and then click **Computer**.
  2. Double-click the CD-ROM icon in the window that appears.

     If the contents of the CD-ROM appear, double-click **MSETUP4.EXE**.

     If you cannot install the MP Drivers with the Setup CD-ROM, install them from the Canon website.

Note

- If the CD-ROM icon does not appear, try the following:
  - Remove the CD-ROM from your computer and reinsert it.
  - Restart your computer.

  If the icon still does not appear, try a different disc and see if it appears. If it does, there is a problem with the Setup CD-ROM. Contact your nearest Canon service center to request a repair.

- **If you cannot get past the Printer Connection screen:**

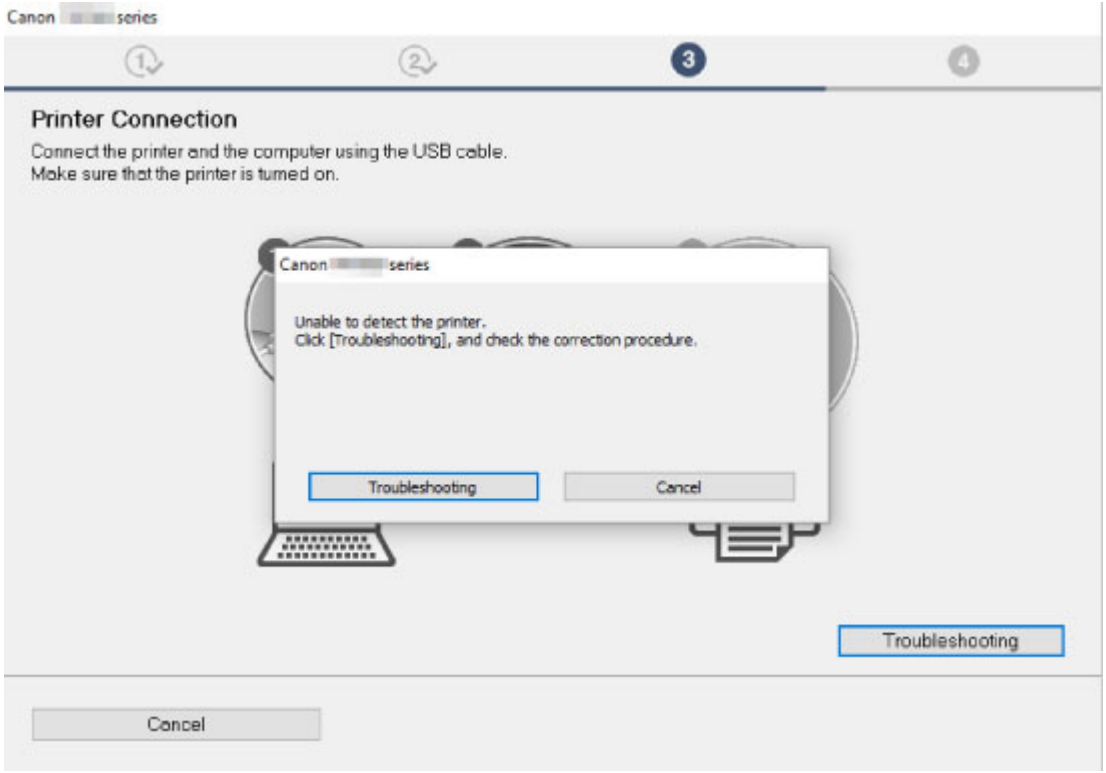

Cannot Proceed beyond Printer Connection Screen

- **Other cases:**

Reinstall the MP Drivers.

If the MP Drivers were not installed correctly, uninstall the MP Drivers, restart your computer, and then reinstall the MP Drivers.

Deleting the Unnecessary MP Drivers

Reinstall the MP Drivers with the Setup CD-ROM or install them from the Canon website.

Note

- If the installer was stopped due to a Windows error, Windows operation may be unstable, and you may not be able to install the drivers. Restart your computer and then reinstall the drivers.

Updating MP Drivers in Network Environment (Windows)

Download the latest MP Drivers.

Download the latest MP Drivers for your model on the download page of the Canon website.

Uninstall the existing MP Drivers and follow the installation instructions to install the latest MP Drivers that you downloaded. In the connection method selection screen, select **Use the printer with Wi-Fi connection** or **Use the printer with wired LAN connection** according to the connection method you use. The printer is detected automatically in the network.

Make sure the printer was found, and install the MP Drivers following the on-screen instructions.

Note

- The network settings on the printer are not affected, so the printer can be used on the network without redoing settings.

Errors and Messages

- An Error Occurs
- Message (Support Code) Appears

An Error Occurs

If an error occurs in printing, for example if the paper runs out or jams, a troubleshooting message appears automatically. Take the appropriate action described in the message.

When an error occurs, a message appears on the computer, or an error code appears on the printer. For some errors, a support code (error number) appears on the computer screen.

When a Support Code and a message are displayed on the computer screen (Windows):

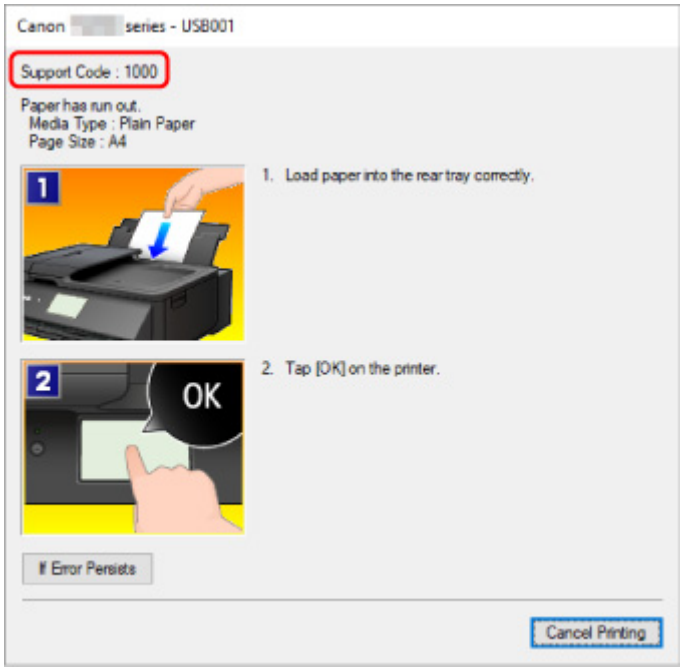

When a Support Code and a message are displayed on the printer (touch screen):

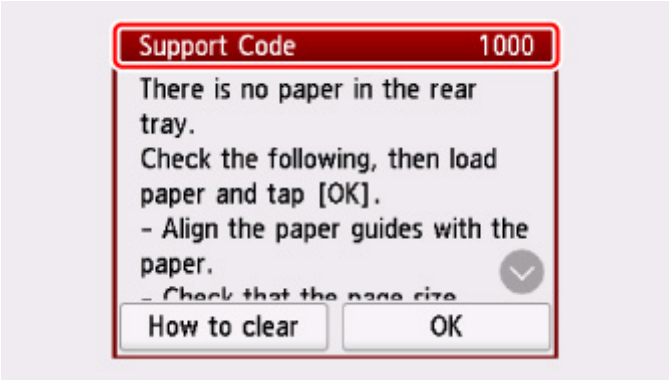

For details on how to resolve errors, see List of Support Code for Error.

Note

- For details on how to resolve errors without Support Codes, see Message (Support Code) Appears.

Message (Support Code) Appears

This section describes some of the errors and messages that may appear.

Note

- A support code (error number) is displayed on the computer for some errors. For details on errors that have support code, see List of Support Code for Error.

If a message appears on the touch screen, see below.

- Message Appears on Touch Screen

If a message appears on the computer, see below.

- Error Regarding Automatic Duplex Printing Is Displayed
- Error Regarding Power Cord Being Unplugged Is Displayed (Windows)
- Writing Error/Output Error/Communication Error (Windows)
- Other Error Messages (Windows)

Q Message Appears on Touch Screen

A

Check the message and take an appropriate action.

- **Power was not turned off correctly the last time. Press the button when turning power off.**

  The printer may have been unplugged while the power was still on.

  Select **OK** on the touch screen.

  Note

  - See Unplugging the Printer to unplug the printer correctly.

- **Cannot connect to the server. Please wait a while and try again.**

  The printer cannot connect to the server due to a communication error.

  Select **OK** on the touch screen and try again after a while.

Q Error Regarding Automatic Duplex Printing Is Displayed

A

Check See Automatic Duplex Printing Problems and take the appropriate action.

Q Error Regarding Power Cord Being Unplugged Is Displayed (Windows)

A

The printer may have been unplugged while it was on.

Check the error message that appears on the computer and click **OK**.

The printer starts printing.

See Unplugging the Printer for unplugging the power cord.

Q Writing Error/Output Error/Communication Error (Windows)

A

Check1 If the **ON** lamp is off, make sure printer is plugged in and turn on.

The **ON** lamp flashes while the printer is initializing. Wait until the **ON** lamp stops flashing and remains lit.

Check2 Make sure printer is properly connected to computer.

If you are using a USB cable, make sure it is securely connected to both the printer and the computer. When the USB cable is securely plugged in, check the following:

- If you are using a relay device such as a USB hub, disconnect it, connect the printer directly to the computer, and retry the printing. If printing starts normally, there is a problem with the relay device. Contact the vendor of the relay device.
- There could also be a problem with the USB cable. Replace the USB cable and retry the printing.

If you use the printer over a LAN, make sure the printer is correctly set up for network use.

Check3 Make sure MP Drivers are installed correctly.

Uninstall the MP Drivers following the procedure described in Deleting the Unnecessary MP Drivers and reinstall them from the Setup CD-ROM or the Canon website.

Check4 When printer is connected to your computer with a USB cable, check device status from your computer.

Follow the procedure below to check the device status.

1. Select **Control Panel** > **Programs** > **Programs and Features**.

   Note

   - If the **User Account Control** screen appears, select **Continue**.

2. Double-click **Universal Serial Bus controllers** and **USB Printing Support**.

   If **USB Printing Support Properties** screen does not appear, make sure the printer is correctly connected to the computer.

   Check2 Make sure printer is properly connected to computer.

3. Click **General** tab and check for a device problem.

   If a device error is shown, see Windows Help to resolve it.

Q Other Error Messages (Windows)

A

Check If an error message appears outside printer status monitor, check the following:

- **"Could not spool successfully due to insufficient disk space"**

  Delete any unnecessary files to increase the amount of free space on the disk.

- **"Could not spool successfully due to insufficient memory"**

  Close other applications to increase the available memory.

  If you still cannot print, restart your computer and retry the printing.

- **"Printer driver could not be found"**

  Uninstall the MP Drivers following the procedure described in Deleting the Unnecessary MP Drivers and reinstall them from the Setup CD-ROM or the Canon website.

- **"Could not print Application name** - File name"

  Try printing again once the current job is complete.

List of Support Code for Error

Support code appears on the touch screen and your computer screen when errors occur.

A "support code" is an error number, and appears along with an error message.

When an error occurs, check the support code displayed on the touch screen and computer screen and take the appropriate action in response.

Support Code Appears on Touch Screen and Computer Screen

- **1000 to 1ZZZ**

  1000 1001 1002 1003 1013

  1200 1240 1270 1300 1303 1304

  1309 1310 1313 1401 1403 1405

  140B 1410 1411 1412 1413 1414

  1551 1552 1600 1660 1684 1688

  1689 168C 1700 1701 1730 1731

  1830 1850 1851 1855 1856 1857

  1871 1874 1890

- **2000 to 2ZZZ**

  2110 2113 2114 2120 2123 2500

  2700 2801 2802 2803

- **3000 to 3ZZZ**

  3402 3403 3404 3405 3406 3407

  3408 340A 340B 340C 340D 340E

  3410 3411 3412 3413 3438 3439

  3440 3441 3442 3443 3444 3445

  3446 3447

- **4000 to 4ZZZ**

  4100 4103 4104 495A

- **5000 to 5ZZZ**

  5011 5012 5040 5050 5100 5200

  520E 5400 5700 5B00 5B01 5C02

- **6000 to 6ZZZ**

  6000 6001 6004 6500 6502 6800

  6801 6830 6831 6832 6833 6900

  6901 6902 6910 6911 6920 6921

  6930 6931 6932 6933 6934 6935

  6936 6937 6938 6940 6941 6942

  6943 6944 6945 6946 6951 6A80

  6A81 6D01

- **7000 to 7ZZZ**

  7500 7600 7700 7800

- **8000 to 8ZZZ**

  8300

- **A000 to ZZZZ**

  C000

For paper jam support codes, see also List of Support Code for Error (Paper Jams).

List of Support Code for Error (Paper Jams)

If paper jams, remove it following the appropriate procedure as shown below.

- If you can see the jammed paper at the paper output slot or the rear tray:

  1300

- If you cannot see the jammed paper at the paper output slot or the rear tray:
  - If the paper fed from the cassette is jammed:

    1303

  - If the paper is jammed when performing automatic duplex printing:

    1304

  - If the paper is jammed as the printer pulled in the printed paper:

    1313

  - If the paper tears and you cannot remove it from the paper output slot or if the paper is jammed inside the printer:

    Paper Is Jammed inside Printer

- If the document is jammed in the ADF (Auto Document Feeder):

  2801

- Cases other than above:

  Other Cases

1300

Cause

Paper is jammed when feeding paper from rear tray.

What to Do

If the paper fed from the rear tray is jammed, remove the jammed paper from the paper output slot or from the rear tray following the instructions below.

1. Slowly pull out paper, either from paper output slot or from rear tray, whichever is easier.

   Hold the paper with both hands, and pull it out slowly so as not to tear it.

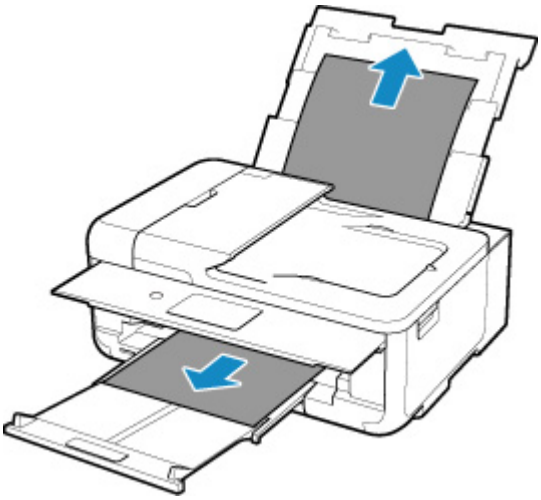

Note

- If you cannot pull out the paper, turn the printer back on without pulling forcibly. The paper may be ejected automatically.
- If paper becomes jammed during printing and you need to turn off the printer to remove it, tap **Stop** to stop the printing before you turn off the printer.
- If the paper tears and you cannot remove the jammed paper from the paper output slot or the rear tray, remove the paper from inside the printer.

  Paper Is Jammed inside Printer

- If you cannot pull the paper out from the paper output slot or from the rear tray, try to pull the paper out from the rear side of the printer.

  Removing Jammed Paper from Rear Side

2. Reload paper and select **OK** on printer's touch screen.

   The printer resumes printing. Reprint the page you were printing if it was not printed properly due to the paper jam.

   If you turned off the printer in step 1, the print data that was sent to the printer is erased. Redo the printing.

Note

- When reloading the paper, make sure you are using suitable paper and loading it correctly.
- We recommend using paper sizes other than A5 to print documents with photos or graphics. A5 paper may curl and jam as it leaves the printer.

If the measures above do not solve the problem, contact your nearest Canon service center to request a repair.

1303

Cause

Paper is jammed when feeding paper from cassette.

What to Do

1. Remove jammed paper.
   - If the paper is jammed at the paper output slot:

     1300
   - If the paper is jammed inside the printer:

     Paper Is Jammed inside Printer
   - If the paper is jammed at the feeder of the cassette:

     Pull out the cassette, and then remove the paper slowly with both hands.

     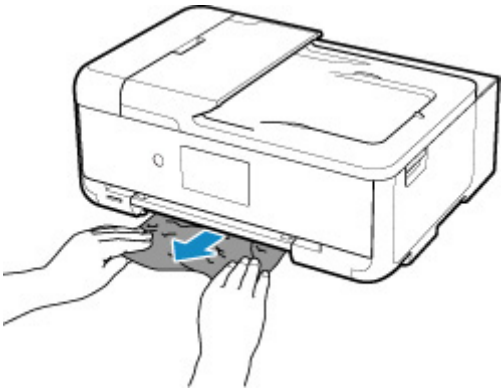
   - If none of the above is applied, see Removing Jammed Paper from Rear Side to open the rear cover and to remove the paper.
2. Load paper in cassette properly.

   Loading Paper in the Cassette
3. Perform printing or copying again.

1304

Cause

Paper is jammed when performing automatic duplex printing.

What to Do

1. Remove jammed paper.
   - If the paper is jammed at the paper output slot:

     1300
   - If the paper is jammed inside the printer:

     Paper Is Jammed inside Printer
   - If the paper is jammed at the feeder of the cassette:

     Pull out the cassette, and then remove the paper slowly with both hands.

     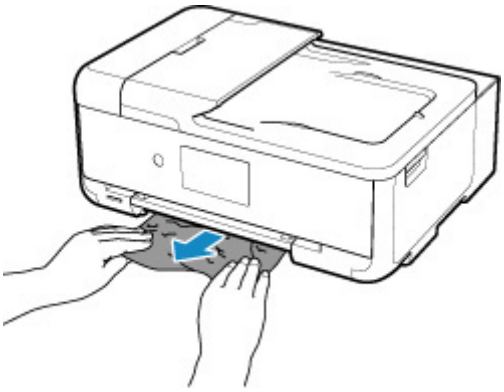
   - If none of the above is applied, see Removing Jammed Paper from Rear Side to open the rear cover and to remove the paper.
2. Load paper properly.

   Loading Paper in the Cassette

   Loading Paper in the Rear Tray
3. Perform printing or copying again.

1313

Cause

Paper is jammed as printer pulled in printed paper.

What to Do

If the paper is jammed as the printer pulled in the printed paper, try to remove the paper from the following locations.

- Paper output slot

  1300

- Inside of the printer

  Paper Is Jammed inside Printer

If the measures above do not solve the problem, see Removing Jammed Paper from Rear Side to open the rear cover and to remove the paper.

Paper Is Jammed inside Printer

If the jammed paper tears and you cannot remove the paper from the paper output slot, or if the jammed paper remains inside the printer, remove the paper following the instructions below.

Note

- If paper becomes jammed during printing and you need to turn off the printer to remove it, tap **Stop** to stop the printing before you turn off the printer.

1. Turn off printer and unplug it.

2. Open scanning unit / cover.

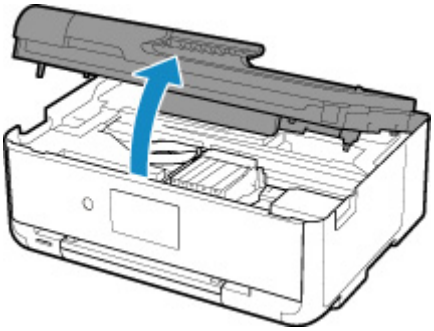

Important

- Do not touch white belt (A).

If you soil or scratch this part by touching it with paper or your hand, it could damage the printer.

3. Check if jammed paper is under print head holder.

If the jammed paper is under the print head holder, move the print head holder to the far right or left, whichever makes it easier to remove the paper.

When moving the print head holder, hold the top of the print head holder and slide it slowly to the far right or left.

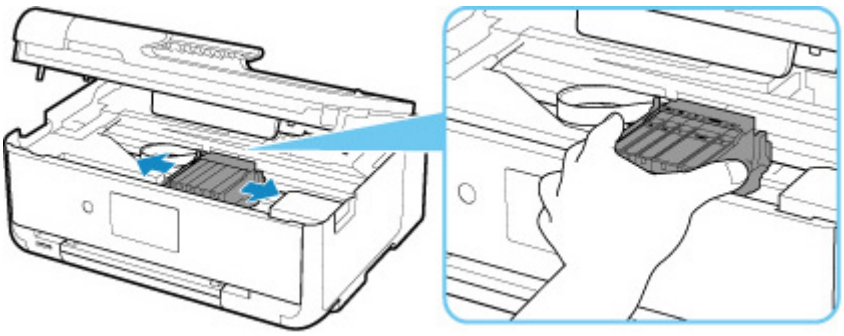

4. Hold jammed paper firmly in both hands.

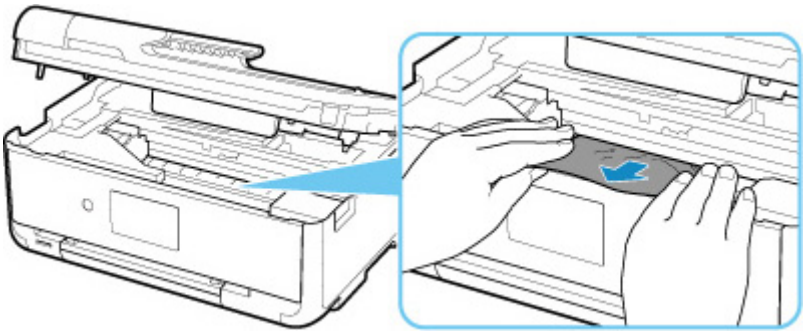

If the paper is rolled up, pull out it.

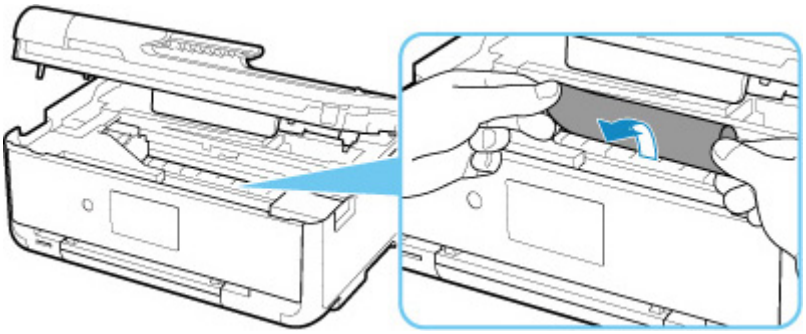

5. Slowly pull out paper, so as not to tear it.

Pull out the paper at an angle of about 45 degrees.

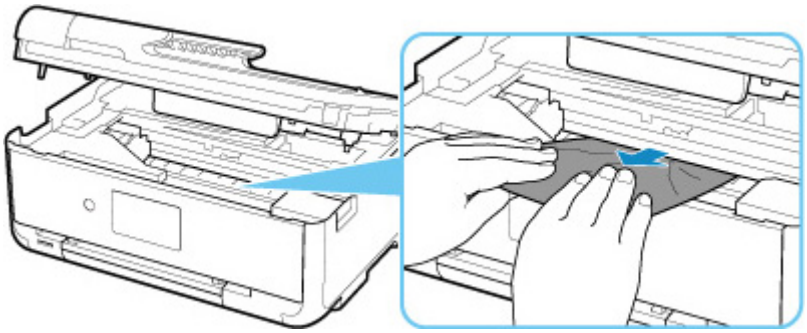

6. Make sure all jammed paper is removed.

If the paper tears when you pull out it, a bit of paper may remain in the printer. Check the following and remove any remaining paper.

- Any paper left under the print head holder?
- Any small bits of paper left in the printer?
- Any paper left in the left and right empty spaces (B) in the printer?

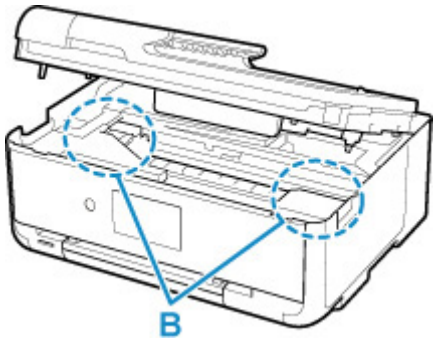

7. Close scanning unit / cover.

All jobs in the print queue are canceled. Redo the printing.

Note

- When reloading the paper, make sure you are using suitable paper and loading it correctly. If a paper jam message appears on the touch screen or on your computer screen when you resume printing after removing all the jammed paper, there may be some paper still inside the printer. Check the printer again for any remaining bits of paper.

If the measures above do not solve the problem, contact your nearest Canon service center to request a repair.

Removing Jammed Paper from Rear Side

Note

- If paper becomes jammed during printing and you need to turn off the printer to remove it, tap **Stop** to stop the printing before you turn off the printer.

1. Rotate printer so that rear side of printer faces toward you.

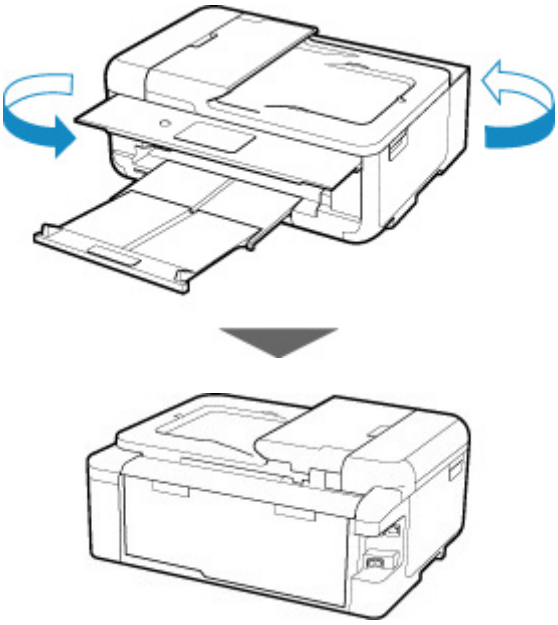

2. Open rear tray cover and then pull up paper support.

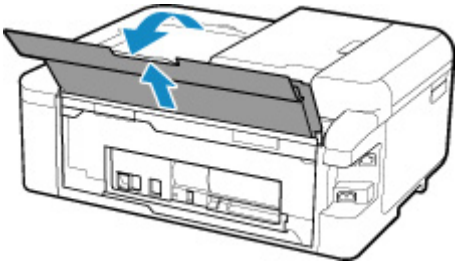

3. Detach rear cover.

   Pull out the rear cover.

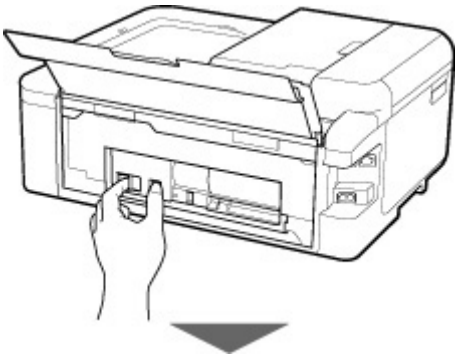

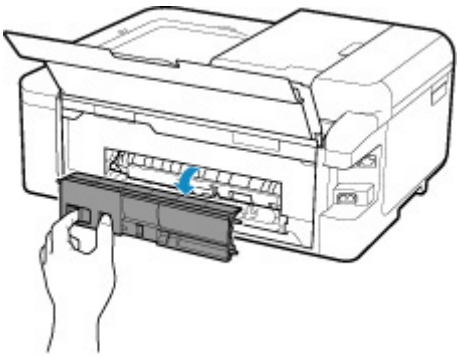

4. Slowly pull out paper.

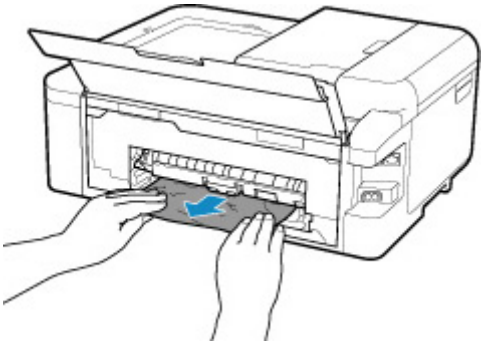

Note

- Do not touch the inner parts of the printer.

If you were not able to remove the paper in this step, detach the transport unit cover and remove the paper by following these steps.

1. Detach transport unit cover.

   Lift up the transport unit cover and pull out it.

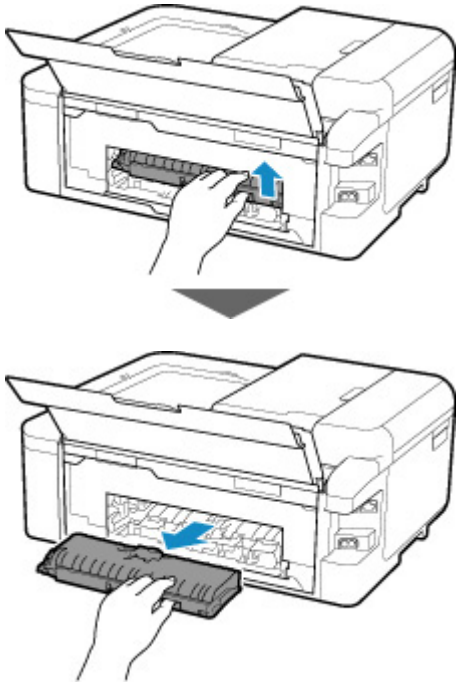

2. Slowly pull out paper.

Note

- Do not touch the inner parts of the printer.

3. Make sure all jammed paper is removed.

4. Attach transport unit cover.

Insert the transport unit cover slowly all the way into printer and take down the transport unit cover.

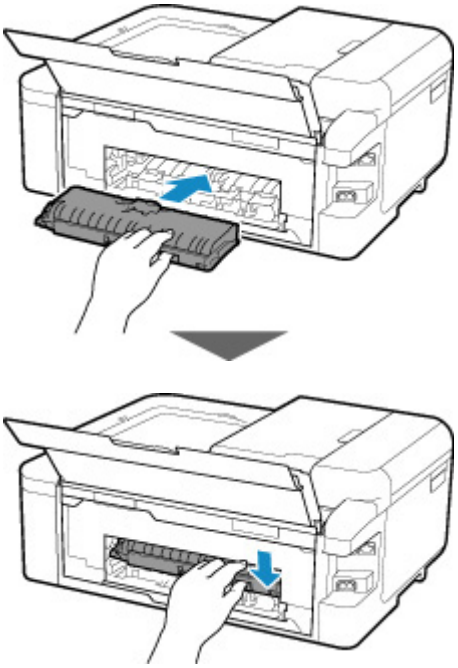

5. Attach rear cover.

Insert the projections of the right side of the rear cover into the printer, and then push the left side of the rear cover until it is closed completely.

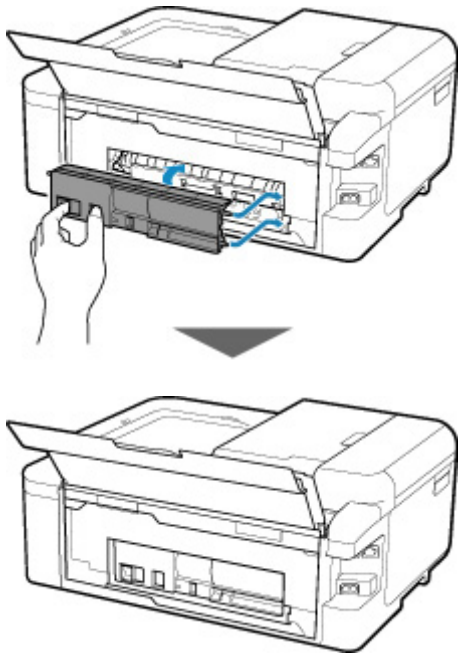

If the measures above do not solve the problem, contact your nearest Canon service center to request a repair.

1000

Cause

Possible causes include the following.

- There is no paper in the rear tray.
- Paper is not loaded in the rear tray properly.

What to Do

Take the corresponding actions below.

- Load paper in the rear tray.
  Loading Paper in the Rear Tray
- Align the paper guides with the both edges of the paper when you load paper in the rear tray.

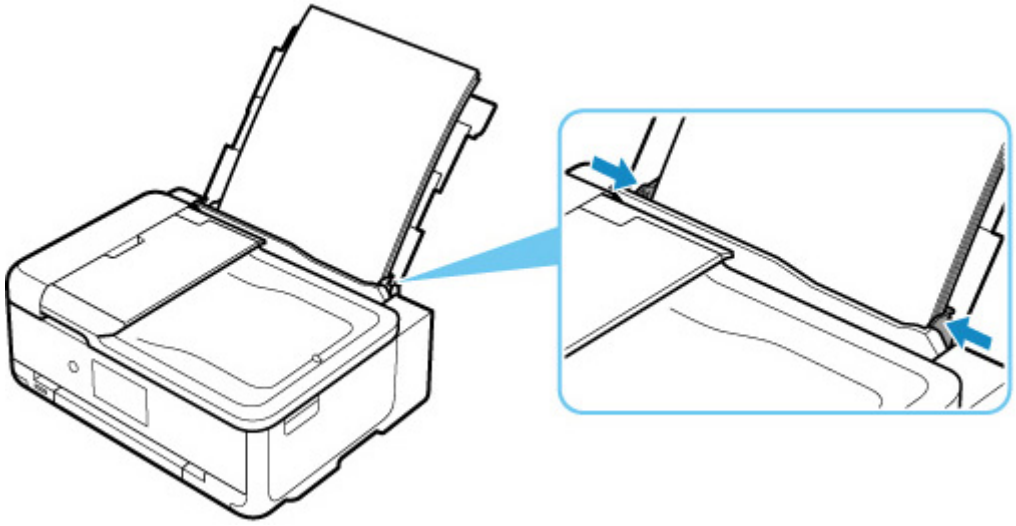

- Set paper information for the paper in the rear tray.

After carrying out the above measures, select **OK** on the touch screen.

Important

- Be sure to close the feed slot cover after loading paper in the rear tray. If the feed slot cover is open, paper cannot be fed.

Note

- After loading paper in the rear tray, the screen for setting rear tray paper information appears. Set paper information for the paper in the rear tray.
- To cancel printing, tap **Stop** on the touch screen.

1003

Cause

Possible causes include the following.

- There is no paper in the cassette.
- Paper is not loaded in the cassette properly.

What to Do

Take the corresponding actions below.

- Load paper in the cassette.
  - Loading Paper in the Cassette
- Align the paper guides with the both edges of the paper when you load paper in the cassette.

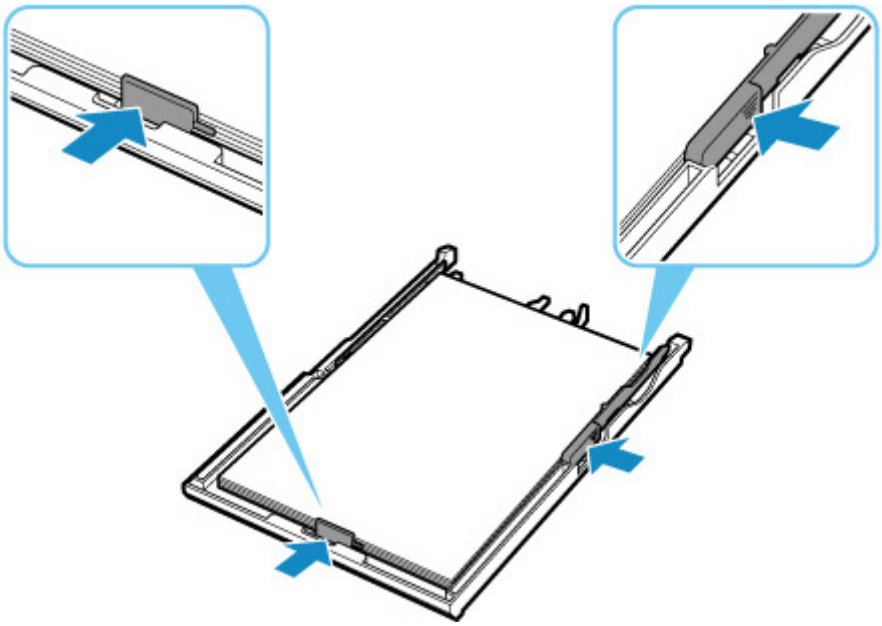

- Set paper information for the paper in the cassette.

After carrying out the above measures, select **OK** on the touch screen.

Note

- Once the cassette is inserted, the screen for setting cassette paper information appears. Set paper information for the paper in the cassette.
- The loadable paper differs depending on the paper source.

  The loadable paper in the cassette is A4, Letter, A5, or B5 size plain paper.
- To cancel printing, tap **Stop** on the touch screen.

1200

Cause

Scanning unit / cover is open.

What to Do

Close the scanning unit / cover and wait for a while.

Do not close it while you are replacing an ink tank.

1401

Cause

Print head may be damaged.

What to Do

Turn off the printer and turn it back on.

If this does not solve the problem, contact your nearest Canon service center to request a repair.

1600

Cause

Ink may have run out.

What to Do

Replacing the ink tank is recommended.

If printing is in progress and you want to continue printing, tap **OK** on the printer with the ink tank installed. Then printing can continue. Replacing the ink tank is recommended after the printing. The printer may be damaged if printing is continued under the ink out condition.

1660

Cause

The ink tank cannot be recognized.

What to Do

Printing cannot be performed because the ink tank is not installed or is not compatible with this printer.

Check the ink tank.

If you want to cancel printing, tap **Stop** on the printer.

1688

Cause

The ink has run out.

What to Do

Replace the ink tank and close the scanning unit / cover.

Printing under the current condition may damage the printer.

If you want to continue printing in this condition, you need to disable the function for detecting the remaining ink level. Touch **Stop** on the printer for at least 5 seconds, and then release it.

With this operation, disabling the function for detecting the remaining ink level is memorized. Please be advised that Canon shall not be liable for any malfunction or trouble which may be caused by continuation of printing under the ink out condition.

Note

- If the function for detecting the remaining ink level is disabled, the ink tank is displayed in white on the touch screen when the current estimated ink level is checked.

1689

Cause

Printer detected ink out condition.

What to Do

Replace the ink tank and close the scanning unit / cover.

An ink tank that was once empty is installed.

Printing under the ink out condition may damage the printer.

If you want to continue printing, you need to disable the function for detecting the remaining ink level. To disable this function, touch **Stop** on the printer for at least 5 seconds, and then release it.

With this operation, disabling the function for detecting the remaining ink level is memorized. Please be advised that Canon shall not be liable for any malfunction or trouble caused by continuation of printing under the ink out condition or by using refilled ink tanks.

Note

- If the function for detecting the remaining ink level is disabled, the ink tank is displayed in white on the touch screen when the current estimated ink level is checked.

1700

Cause

Ink absorber is almost full.

What to Do

Select **OK** on the touch screen to continue printing. Contact your nearest Canon service center to request a repair.

Note

- In the case of warnings or errors caused by remaining ink levels, the printer cannot print or scan.

1890

Cause

Tape for securing print head holder during transportation may still be attached.

What to Do

Open the scanning unit / cover and make sure the tape for securing the print head holder during transportation has been removed.

If the tape is still there, remove it and close the scanning unit / cover.

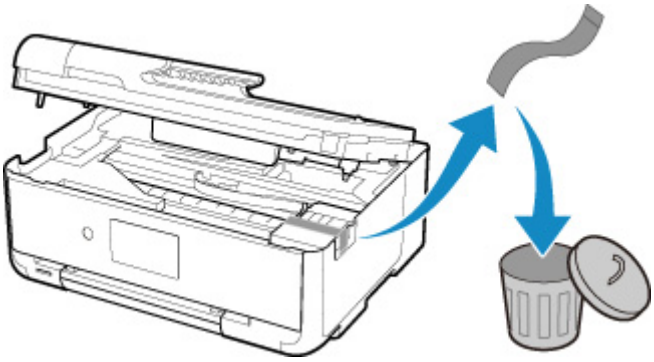

If this does not solve the problem, contact your nearest Canon service center to request a repair.

2110

Cause

Paper settings for printing or copying do not match cassette paper information set on printer.

Note

- See below for the correct correspondence between paper settings made on the printer driver or on the touch screen.
  - Paper Settings on the Printer Driver and the Printer (Media Type) (Windows)
  - Paper Settings on the Printer Driver and the Printer (Paper Size) (Windows)
- For copying, make the copy paper settings to match cassette paper information set on the printer.
- See below for details on cassette paper information set on the printer.
  - Paper Settings

If the print or copy paper settings do not match cassette paper information set on the printer, as shown below, a message appears on the touch screen.

- Print settings specified on the printer driver:

  Paper size: A5

  Media type: Plain paper

- Cassette paper information set on the printer:

  Paper size: A4

  Media type: Plain paper

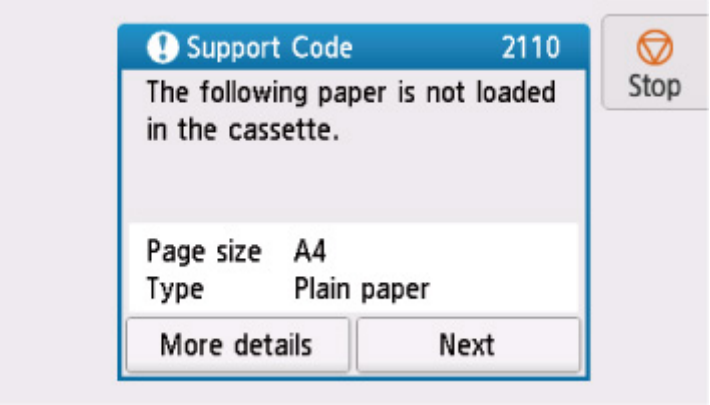

What to Do

Select **Next** on the touch screen to display the screen below.

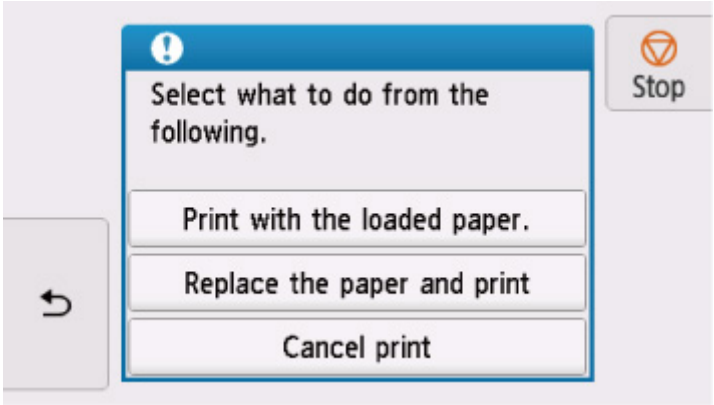

Select the appropriate action.

Note

- Depending on settings, some of the options below may not appear.

Print with the loaded paper.

Select this option to print or copy onto the paper in the cassette without changing the paper settings.

For example, if the print or copy paper setting is A5, and cassette paper information is set to A4, the A5 size setting is used to print or copy onto the paper in the cassette.

Replace the paper and print

Select this option to print after changing the paper in the cassette.

For example, if the print or copy paper setting is A5, and cassette paper information is set to A4, change the paper in the cassette to A5 paper and proceed with printing or copying.

Once you have inserted the cassette after changing the paper, the screen for setting cassette paper information appears. Set paper information for the paper in the cassette.

Note

- If you do not know what paper information to set, tap (Back). The previous screen appears, showing the paper size and media type. Check the paper settings and set them as cassette paper information.
- See below for the correct correspondence between paper settings made on the printer driver or on the touch screen.

  - Paper Settings on the Printer Driver and the Printer (Media Type) (Windows)
  - Paper Settings on the Printer Driver and the Printer (Paper Size) (Windows)

Cancel print

Cancels printing.

Select this option when you want to change the print or copy paper settings. Change the paper settings and retry printing.

Note

- To suppress the misprint prevention message, change the setting as described below. When you suppress the message, the printer uses the paper settings for printing or copying onto the paper in the cassette regardless of whether or not the paper matches these settings.

- To change the message view setting when printing or copying using the operation panel of the printer:
  - Feed settings
- To change the message view setting when printing using the printer driver:
  - Changing the Printer Operation Mode (Windows)
  - Changing the Printer Operation Mode (macOS)

4103

Cause

Cannot perform printing with current print settings.

What to Do

Tap **Stop** on the touch screen to cancel printing.

Then change the print settings and retry printing.

5011

Cause

Printer error has occurred.

What to Do

Turn off printer and unplug it.

Plug in the printer again and turn it back on.

If this does not solve the problem, contact your nearest Canon service center to request a repair.

5012

Cause

Printer error has occurred.

What to Do

Turn off printer and unplug it.

Plug in the printer again and turn it back on.

If this does not solve the problem, contact your nearest Canon service center to request a repair.

5100

Cause

Printer error has occurred.

What to Do

Cancel printing and turn off the printer.

Check the following:

- Make sure print head holder motion is not impeded by tapes for securing the print head holder during transportation, jammed paper, etc.

  Remove any impediment.

- Make sure the ink tanks are properly installed.

  Press ink tanks until they click into place.

Turn the printer back on.

If this does not solve the problem, contact your nearest Canon service center to request a repair.

Important

- When clearing an impediment to print head holder motion, be careful not to touch white belt (A).

  If you soil or scratch this part by touching it with paper or your hand, it could damage the printer.

5200

Cause

Printer error has occurred.

What to Do

Turn off printer and unplug it.

After a while, plug in the printer again and turn it back on.

If this does not solve the problem, contact your nearest Canon service center to request a repair.

5B00

Cause

Printer error has occurred.

What to Do

Contact your nearest Canon service center to request a repair.

Note

- In the case of warnings or errors caused by remaining ink levels, the printer cannot print or scan.

6000

Cause

Printer error has occurred.

What to Do

If the paper is jammed, remove it depending on the jammed location and cause.

List of Support Code for Error (Paper Jams)

Turn off printer and unplug it.

Plug in the printer again and turn it back on.

If this does not solve the problem, contact your nearest Canon service center to request a repair.

C000

Cause

Printer error has occurred.

What to Do

Cancel printing and turn off the printer.

Check the following:

- Make sure print head holder motion is not impeded by tapes for securing the print head holder during transportation, jammed paper, etc.

  Remove any impediment.

- Make sure the ink tanks are properly installed.

  Press ink tanks until they click into place.

Turn the printer back on.

If this does not solve the problem, contact your nearest Canon service center to request a repair.

Important

- When clearing an impediment to print head holder motion, be careful not to touch white belt (A).

  If you soil or scratch this part by touching it with paper or your hand, it could damage the printer.