Canon

TS3300 series

Online Manual

English

Contents

Using Online Manual. 8

Symbols Used in This Document. 9

Touch-enabled Device Users (Windows). 10

Trademarks and Licenses. 11

Basic Operation. 31

Printing Photos from a Computer. 32

Printing Photos from a Smartphone/Tablet. 37

Copying. 40

Network. 44

Restrictions. 46

Network Connection Tips. 48

Default Network Settings. 49

Detect Same Printer Name. 50

Connects to Another Computer via LAN/Changes from USB to LAN Connection. 51

Printing Network Settings. 52

Reconfiguration Method of Wi-Fi Connection. 56

IJ Network Device Setup Utility (macOS). 57

IJ Network Device Setup Utility. 58

Starting Up IJ Network Device Setup Utility. 59

Diagnosing and Repairing Network Settings. 60

List of Models Which Does Not Support Diagnosis and Repair Function. 61

Handling Paper, Originals, FINE Cartridges, etc.. 62

Loading Paper. 63

Loading Plain Paper / Photo Paper. 64

Loading Originals. 68

Loading Originals on Platen. 69

Supported Originals. 71

Replacing a FINE Cartridge. 72

Replacing a FINE Cartridge. 73

Checking the Ink Status with the Ink Lamps on the Operation Panel. 79

Ink Tips. 81
If Printing Is Faint or Uneven. 82
Maintenance Procedure. 83
Printing the Nozzle Check Pattern. 86
Examining the Nozzle Check Pattern. 87
Cleaning the Print Head. 88
Deep Print Head Cleaning. 89
Aligning the Print Head. 90
Performing Maintenance Functions from Your Computer (macOS). 92
Opening Remote UI for Maintenance. 93
Cleaning the Print Heads. 94
Adjusting Print Head Position. 96
Checking Ink Status from Your Computer. 97
Cleaning. 98
Cleaning Paper Feed Rollers. 99
Cleaning Inside the Printer (Bottom Plate Cleaning). 101
Overview. 103
Safety. 104
Safety Precautions. 105
Regulatory Information. 108
WEEE (EU&EEA). 110
Handling Precautions. 121
Legal Restrictions on Scanning/Copying. 122
Printer Handling Precautions. 123
Transporting Your Printer. 124
When Repairing, Lending, or Disposing of the Printer. 125
Keeping Print Quality High. 126
Main Components and Their Use. 127
Main Components. 128
Front View. 129
Rear View. 131
Inside View. 132
Operation Panel. 133
Power Supply. 135

Checking that Power Is On. 136
Turning the Printer On and Off. 137
Checking the Power Plug/Power Cord. 139
Unplugging the Printer. 140
Indication of LCD. 141
Changing Settings. 143
Changing Printer Settings from Your Computer (macOS). 144
Managing the Printer Power. 145
Changing the Printer Operation Mode. 146
Changing Settings from Operation Panel. 147
Quiet setting. 148
Initializing Printer Settings. 149
Switching/Disabling Wireless Connection Function. 150
Specifications. 151
Information about Paper. 154
Supported Media Types. 155
Paper Load Limit. 157
Unsupported Media Types. 159
Handling Paper. 160
Printing. 161
Printing from Computer. 162
Printing from Application Software (macOS AirPrint). 163
Printing. 164
Adding Printer. 167
How to Open Printer Settings Screen. 168
Displaying the Printing Status Screen. 169
Deleting the Undesired Print Job. 171
Removing Printer That Is No Longer Required from List of Printers. 172
Printing Using Canon Application Software. 173
Printing from Smartphone/Tablet. 174
Printing/Scanning with Wireless Direct. 175
Paper Settings. 177

Copying. 180
Making Copies on Plain Paper. 181
Copying on Photo Paper. 183
Scanning. 185
Scanning from Computer (macOS). 186
Scanning According to Item Type or Purpose (IJ Scan Utility Lite). 187
IJ Scan Utility Lite Features. 188
Scanning Easily (Auto Scan). 190
Scanning Documents and Photos. 192
Scanning Tips. 193
Positioning Originals (Scanning from Computer). 194
Frequently Asked Questions. 199
Network Settings and Common Problems. 201
Network Communication Problems. 203
Cannot Find Printer on Network. 204
Cannot Find Printer on Check Printer Settings Screen During Setup (Windows). 205
Cannot Find Printer on Check Printer Settings Screen During Wi-Fi Setup (Windows)-Checking Power Status. 206
Cannot Find Printer on Check Printer Settings Screen During Wi-Fi Setup (Windows)-Checking PC Network Connection. 207
Cannot Find Printer on Check Printer Settings Screen During Wi-Fi Setup (Windows)-Checking Printer's Wi-Fi Settings. 208
Cannot Find Printer on Check Printer Settings Screen During Wi-Fi Setup (Windows)-Checking Wi-Fi Environment. 209
Cannot Find Printer on Check Printer Settings Screen During Wi-Fi Setup (Windows)-Checking Printer's IP Address. 211
Cannot Find Printer on Check Printer Settings Screen During Wi-Fi Setup (Windows)-Checking Security Software Settings. 212
Cannot Find Printer on Check Printer Settings Screen During Wi-Fi Setup (Windows)-Checking Wireless Router Settings. 213
Cannot Proceed beyond Printer Connection Screen. 214
Cannot Find Printer while Using Wi-Fi. 216
Network Connection Problems. 219
Printer Suddenly Stopped Working for Some Reason. 220

Network Key (Password) Unknown. 225
Printer Cannot Be Used After Replacing Wireless Router or Changed Router Settings. 227
Other Network Problems. 229
Checking Network Information. 230
Restoring to Factory Defaults. 233
Problems while Printing/Scanning from Smartphone/Tablet. 234
Cannot Print/Scan from Smartphone/Tablet. 235
Printing Problems. 239
Printer Does Not Print. 240
Ink Does Not Come Out. 242
Printer Does Not Pick up or Feed the Paper/"No Paper" Error. 244
Printout Results Are Unsatisfactory. 246
Printouts Are Blank/Blurry or Fuzzy/Inaccurate or Bleeding Colors/Streaks or Lines. 248
Colors Are Unclear. 251
Lines Are Misaligned/Distorted. 253
Paper Is Smudged / Printed Surface Is Scratched. 254
Scanning Problems (macOS). 257
Scanning Problems. 258
Scanner Does Not Work. 259
Scanner Driver Does Not Start. 260
Error Message Is Displayed. 261
Scanning Does Not Start / Scanning Does Not Complete. 262
Items Cannot Be Scanned Correctly. 263
Mechanical Problems. 264
Printer Does Not Turn On. 265
Printer Turns Off Unexpectedly or Repeatedly. 266
USB Connection Problems. 268
Cannot Communicate with Printer via USB. 269
Installation and Download Problems. 270
Failed to MP Drivers Installation (Windows). 271
Updating MP Drivers in Network Environment (Windows). 272
Errors and Messages. 273
When Error Occurred. 274
Message (Support Code) Appears. 281

List of Support Code for Error. 283
List of Support Code for Error (Paper Jams). 285
1300. 286
Paper Is Jammed inside Printer. 288
Printer Is Out of Paper (1000). 291
1200. 292
1203. 293
1401. 294
1430. 295
1485. 296
1682. 297
1686. 298
1688. 299
FINE Cartridge is Not Installed (168A). 300
1700. 301
Shipping Tape etc. Are Still Attached (1890). 302
2114. 303
2900. 304
2901. 305
4102. 306
4103. 307
5011. 308
5012. 309
5100. 310
5200. 311
5B00. 312
6000. 313

Using Online Manual

- Operating Environment
- Symbols Used in This Document
- Touch-enabled Device Users (Windows)
- Printing Online Manual
- Trademarks and Licenses
- Screenshots in This Manual

Symbols Used in This Document

Warning

Instructions that, if ignored, could result in death, serious personal injury, or property damage caused by incorrect operation of the equipment. These must be observed for safe operation.

Caution

Instructions that, if ignored, could result in personal injury or property damage caused by incorrect operation of the equipment. These must be observed for safe operation.

Important

Instructions including important information that must be observed to avoid damage and injury or improper use of the product. Be sure to read these instructions.

Note

Instructions including notes for operation and additional explanations.

Basics

Instructions explaining basic operations of your product.

Note

- Icons may vary depending on your product.

Touch-enabled Device Users (Windows)

For touch actions, you need to replace "right-click" in this document with the action set on the operating system. For example, if the action is set to "press and hold" on your operating system, replace "right-click" with "press and hold."

Trademarks and Licenses

- Microsoft is a registered trademark of Microsoft Corporation.
- Windows is a trademark or registered trademark of Microsoft Corporation in the U.S. and/or other countries.
- Windows Vista is a trademark or registered trademark of Microsoft Corporation in the U.S. and/or other countries.
- Microsoft Edge is a trademark or registered trademark of Microsoft Corporation in the U.S. and/or other countries.
- Internet Explorer is a trademark or registered trademark of Microsoft Corporation in the U.S. and/or other countries.
- Mac, Mac OS, macOS, OS X, AirPort, App Store, AirPrint, the AirPrint logo, Safari, Bonjour, iPad, iPad Air, iPad mini, iPadOS, iPhone and iPod touch are trademarks of Apple Inc., registered in the U.S. and other countries.
- IOS is a trademark or registered trademark of Cisco in the U.S. and other countries and is used under license.
- Google Cloud Print, Google Chrome, Chrome OS, Chromebook, Android, Google Drive, Google Apps and Google Analytics are either registered trademarks or trademarks of Google Inc. Google Play and Google Play Logo are trademarks of Google LLC.
- Adobe, Acrobat, Flash, Photoshop, Photoshop Elements, Lightroom, Adobe RGB and Adobe RGB (1998) are either registered trademarks or trademarks of Adobe Systems Incorporated in the United States and/or other countries.
- Bluetooth is a trademark of Bluetooth SIG, Inc., U.S.A. and licensed to Canon Inc.
- Autodesk and AutoCAD are registered trademarks or trademarks of Autodesk, Inc., and/or its subsidiaries and/or affiliates in the USA and/or other countries.
- QR Code is a registered trademark of DENSO WAVE INCORPORATED in Japan and in other countries.
- USB Type-C™ is a trademark of USB Implementers Forum.
- The Mopria® word mark and the Mopria® Logo are registered and/or unregistered trademarks of Mopria Alliance, Inc. in the United States and other countries. Unauthorized use is strictly prohibited.
- HP-GL and HP-GL/2 are either registered trademarks or trademarks of Hewlett Packard Company in the U.S. and/or other countries.

Note

- The formal name of Windows Vista is Microsoft Windows Vista operating system.

Copyright (c) 2003-2015 Apple Inc. All rights reserved.

Redistribution and use in source and binary forms, with or without modification, are permitted provided that the following conditions are met:

1. Redistributions of source code must retain the above copyright notice, this list of conditions and the following disclaimer.
2. Redistributions in binary form must reproduce the above copyright notice, this list of conditions and the following disclaimer in the documentation and/or other materials provided with the distribution.
3. Neither the name of Apple Inc. ("Apple") nor the names of its contributors may be used to endorse or promote products derived from this software without specific prior written permission.

THIS SOFTWARE IS PROVIDED BY APPLE AND ITS CONTRIBUTORS "AS IS" AND ANY EXPRESS OR IMPLIED WARRANTIES, INCLUDING, BUT NOT LIMITED TO, THE IMPLIED WARRANTIES OF MERCHANTABILITY AND FITNESS FOR A PARTICULAR PURPOSE ARE DISCLAIMED. IN NO EVENT SHALL APPLE OR ITS CONTRIBUTORS BE LIABLE FOR ANY DIRECT, INDIRECT, INCIDENTAL, SPECIAL, EXEMPLARY, OR CONSEQUENTIAL DAMAGES (INCLUDING, BUT NOT LIMITED TO, PROCUREMENT OF SUBSTITUTE GOODS OR SERVICES; LOSS OF USE, DATA, OR PROFITS; OR BUSINESS INTERRUPTION) HOWEVER CAUSED AND ON ANY THEORY OF LIABILITY, WHETHER IN CONTRACT, STRICT LIABILITY, OR TORT (INCLUDING NEGLIGENCE OR OTHERWISE) ARISING IN ANY WAY OUT OF THE USE OF THIS SOFTWARE, EVEN IF ADVISED OF THE POSSIBILITY OF SUCH DAMAGE.

Apache License

Version 2.0, January 2004

http://www.apache.org/licenses/
TERMS AND CONDITIONS FOR USE, REPRODUCTION, AND DISTRIBUTION

1. Definitions.

   "License" shall mean the terms and conditions for use, reproduction, and distribution as defined by Sections 1 through 9 of this document.

   "Licensor" shall mean the copyright owner or entity authorized by the copyright owner that is granting the License.

   "Legal Entity" shall mean the union of the acting entity and all other entities that control, are controlled by, or are under common control with that entity. For the purposes of this definition, "control" means (i) the power, direct or indirect, to cause the direction or management of such entity, whether by contract or otherwise, or (ii) ownership of fifty percent (50%) or more of the outstanding shares, or (iii) beneficial ownership of such entity.

   "You" (or "Your") shall mean an individual or Legal Entity exercising permissions granted by this License.

   "Source" form shall mean the preferred form for making modifications, including but not limited to software source code, documentation source, and configuration files.

   "Object" form shall mean any form resulting from mechanical transformation or translation of a Source form, including but not limited to compiled object code, generated documentation, and conversions to other media types.

   "Work" shall mean the work of authorship, whether in Source or Object form, made available under the License, as indicated by a copyright notice that is included in or attached to the work (an example is provided in the Appendix below).

   "Derivative Works" shall mean any work, whether in Source or Object form, that is based on (or derived from) the Work and for which the editorial revisions, annotations, elaborations, or other modifications represent, as a whole, an original work of authorship. For the purposes of this License, Derivative Works shall not include works that remain separable from, or merely link (or bind by name) to the interfaces of, the Work and Derivative Works thereof.

   "Contribution" shall mean any work of authorship, including the original version of the Work and any modifications or additions to that Work or Derivative Works thereof, that is intentionally submitted to Licensor for inclusion in the Work by the copyright owner or by an individual or

Legal Entity authorized to submit on behalf of the copyright owner. For the purposes of this definition, "submitted" means any form of electronic, verbal, or written communication sent to the Licensor or its representatives, including but not limited to communication on electronic mailing lists, source code control systems, and issue tracking systems that are managed by, or on behalf of, the Licensor for the purpose of discussing and improving the Work, but excluding communication that is conspicuously marked or otherwise designated in writing by the copyright owner as "Not a Contribution."

"Contributor" shall mean Licensor and any individual or Legal Entity on behalf of whom a Contribution has been received by Licensor and subsequently incorporated within the Work.

2. Grant of Copyright License. Subject to the terms and conditions of this License, each Contributor hereby grants to You a perpetual, worldwide, non-exclusive, no-charge, royalty-free, irrevocable copyright license to reproduce, prepare Derivative Works of, publicly display, publicly perform, sublicense, and distribute the Work and such Derivative Works in Source or Object form.
3. Grant of Patent License. Subject to the terms and conditions of this License, each Contributor hereby grants to You a perpetual, worldwide, non-exclusive, no-charge, royalty-free, irrevocable (except as stated in this section) patent license to make, have made, use, offer to sell, sell, import, and otherwise transfer the Work, where such license applies only to those patent claims licensable by such Contributor that are necessarily infringed by their Contribution(s) alone or by combination of their Contribution(s) with the Work to which such Contribution(s) was submitted. If You institute patent litigation against any entity (including a cross-claim or counterclaim in a lawsuit) alleging that the Work or a Contribution incorporated within the Work constitutes direct or contributory patent infringement, then any patent licenses granted to You under this License for that Work shall terminate as of the date such litigation is filed.
4. Redistribution. You may reproduce and distribute copies of the Work or Derivative Works thereof in any medium, with or without modifications, and in Source or Object form, provided that You meet the following conditions:

    1. You must give any other recipients of the Work or Derivative Works a copy of this License; and
    2. You must cause any modified files to carry prominent notices stating that You changed the files; and
    3. You must retain, in the Source form of any Derivative Works that You distribute, all copyright, patent, trademark, and attribution notices from the Source form of the Work, excluding those notices that do not pertain to any part of the Derivative Works; and
    4. If the Work includes a "NOTICE" text file as part of its distribution, then any Derivative Works that You distribute must include a readable copy of the attribution notices contained within such NOTICE file, excluding those notices that do not pertain to any part of the Derivative Works, in at least one of the following places: within a NOTICE text file distributed as part of the Derivative Works; within the Source form or documentation, if provided along with the Derivative Works; or, within a display generated by the Derivative Works, if and wherever such third-party notices normally appear. The contents of the NOTICE file are for informational purposes only and do not modify the License. You may add Your own attribution notices within Derivative Works that You distribute, alongside or as an addendum to the NOTICE text from the Work, provided that such additional attribution notices cannot be construed as modifying the License.

    You may add Your own copyright statement to Your modifications and may provide additional or different license terms and conditions for use, reproduction, or distribution of Your modifications, or for any such Derivative Works as a whole, provided Your use, reproduction, and distribution of the Work otherwise complies with the conditions stated in this License.

5. Submission of Contributions. Unless You explicitly state otherwise, any Contribution intentionally submitted for inclusion in the Work by You to the Licensor shall be under the terms and conditions of this License, without any additional terms or conditions. Notwithstanding the above, nothing herein shall supersede or modify the terms of any separate license agreement you may have executed with Licensor regarding such Contributions.
6. Trademarks. This License does not grant permission to use the trade names, trademarks, service marks, or product names of the Licensor, except as required for reasonable and customary use in describing the origin of the Work and reproducing the content of the NOTICE file.
7. Disclaimer of Warranty. Unless required by applicable law or agreed to in writing, Licensor provides the Work (and each Contributor provides its Contributions) on an "AS IS" BASIS, WITHOUT WARRANTIES OR CONDITIONS OF ANY KIND, either express or implied, including, without limitation, any warranties or conditions of TITLE, NON-INFRINGEMENT, MERCHANTABILITY, or FITNESS FOR A PARTICULAR PURPOSE. You are solely responsible for determining the appropriateness of using or redistributing the Work and assume any risks associated with Your exercise of permissions under this License.
8. Limitation of Liability. In no event and under no legal theory, whether in tort (including negligence), contract, or otherwise, unless required by applicable law (such as deliberate and grossly negligent acts) or agreed to in writing, shall any Contributor be liable to You for damages, including any direct, indirect, special, incidental, or consequential damages of any character arising as a result of this License or out of the use or inability to use the Work (including but not limited to damages for loss of goodwill, work stoppage, computer failure or malfunction, or any and all other commercial damages or losses), even if such Contributor has been advised of the possibility of such damages.
9. Accepting Warranty or Additional Liability. While redistributing the Work or Derivative Works thereof, You may choose to offer, and charge a fee for, acceptance of support, warranty, indemnity, or other liability obligations and/or rights consistent with this License. However, in accepting such obligations, You may act only on Your own behalf and on Your sole responsibility, not on behalf of any other Contributor, and only if You agree to indemnify, defend, and hold each Contributor harmless for any liability incurred by, or claims asserted against, such Contributor by reason of your accepting any such warranty or additional liability.
END OF TERMS AND CONDITIONS

---- Part 1: CMU/UCD copyright notice: (BSD like) -----

Copyright 1989, 1991, 1992 by Carnegie Mellon University

Derivative Work - 1996, 1998-2000

Copyright 1996, 1998-2000 The Regents of the University of California

All Rights Reserved

Permission to use, copy, modify and distribute this software and its documentation for any purpose and without fee is hereby granted, provided that the above copyright notice appears in all copies and that both that copyright notice and this permission notice appear in supporting documentation, and that the name of CMU and The Regents of the University of California not be used in advertising or publicity pertaining to distribution of the software without specific written permission.

CMU AND THE REGENTS OF THE UNIVERSITY OF CALIFORNIA DISCLAIM ALL WARRANTIES WITH REGARD TO THIS SOFTWARE, INCLUDING ALL IMPLIED WARRANTIES OF MERCHANTABILITY AND FITNESS. IN NO EVENT SHALL CMU OR THE REGENTS OF THE UNIVERSITY OF CALIFORNIA BE LIABLE FOR ANY SPECIAL, INDIRECT OR CONSEQUENTIAL

DAMAGES OR ANY DAMAGES WHATSOEVER RESULTING FROM THE LOSS OF USE, DATA OR PROFITS, WHETHER IN AN ACTION OF CONTRACT, NEGLIGENCE OR OTHER TORTIOUS ACTION, ARISING OUT OF OR IN CONNECTION WITH THE USE OR PERFORMANCE OF THIS SOFTWARE.

---- Part 2: Networks Associates Technology, Inc copyright notice (BSD) -----

Copyright (c) 2001-2003, Networks Associates Technology, Inc

All rights reserved.

Redistribution and use in source and binary forms, with or without modification, are permitted provided that the following conditions are met:

* Redistributions of source code must retain the above copyright notice, this list of conditions and the following disclaimer.
* Redistributions in binary form must reproduce the above copyright notice, this list of conditions and the following disclaimer in the documentation and/or other materials provided with the distribution.
* Neither the name of the Networks Associates Technology, Inc nor the names of its contributors may be used to endorse or promote products derived from this software without specific prior written permission.

THIS SOFTWARE IS PROVIDED BY THE COPYRIGHT HOLDERS AND CONTRIBUTORS ``AS IS'' AND ANY EXPRESS OR IMPLIED WARRANTIES, INCLUDING, BUT NOT LIMITED TO, THE IMPLIED WARRANTIES OF MERCHANTABILITY AND FITNESS FOR A PARTICULAR PURPOSE ARE DISCLAIMED. IN NO EVENT SHALL THE COPYRIGHT HOLDERS OR CONTRIBUTORS BE LIABLE FOR ANY DIRECT, INDIRECT, INCIDENTAL, SPECIAL, EXEMPLARY, OR CONSEQUENTIAL DAMAGES (INCLUDING, BUT NOT LIMITED TO, PROCUREMENT OF SUBSTITUTE GOODS OR SERVICES; LOSS OF USE, DATA, OR PROFITS; OR BUSINESS INTERRUPTION) HOWEVER CAUSED AND ON ANY THEORY OF LIABILITY, WHETHER IN CONTRACT, STRICT LIABILITY, OR TORT (INCLUDING NEGLIGENCE OR OTHERWISE) ARISING IN ANY WAY OUT OF THE USE OF THIS SOFTWARE, EVEN IF ADVISED OF THE POSSIBILITY OF SUCH DAMAGE.

---- Part 3: Cambridge Broadband Ltd. copyright notice (BSD) -----

Portions of this code are copyright (c) 2001-2003, Cambridge Broadband Ltd.

All rights reserved.

Redistribution and use in source and binary forms, with or without modification, are permitted provided that the following conditions are met:

* Redistributions of source code must retain the above copyright notice, this list of conditions and the following disclaimer.
* Redistributions in binary form must reproduce the above copyright notice, this list of conditions and the following disclaimer in the documentation and/or other materials provided with the distribution.
* The name of Cambridge Broadband Ltd. may not be used to endorse or promote products derived from this software without specific prior written permission.

THIS SOFTWARE IS PROVIDED BY THE COPYRIGHT HOLDER ``AS IS'' AND ANY EXPRESS OR IMPLIED WARRANTIES, INCLUDING, BUT NOT LIMITED TO, THE IMPLIED WARRANTIES OF MERCHANTABILITY AND FITNESS FOR A PARTICULAR PURPOSE ARE DISCLAIMED. IN NO EVENT SHALL THE COPYRIGHT HOLDER BE LIABLE FOR ANY DIRECT, INDIRECT, INCIDENTAL, SPECIAL, EXEMPLARY, OR CONSEQUENTIAL DAMAGES (INCLUDING, BUT NOT LIMITED TO, PROCUREMENT OF SUBSTITUTE GOODS OR SERVICES; LOSS OF USE, DATA, OR PROFITS; OR

BUSINESS INTERRUPTION) HOWEVER CAUSED AND ON ANY THEORY OF LIABILITY, WHETHER IN CONTRACT, STRICT LIABILITY, OR TORT (INCLUDING NEGLIGENCE OR OTHERWISE) ARISING IN ANY WAY OUT OF THE USE OF THIS SOFTWARE, EVEN IF ADVISED OF THE POSSIBILITY OF SUCH DAMAGE.

---- Part 4: Sun Microsystems, Inc. copyright notice (BSD) -----

Copyright c 2003 Sun Microsystems, Inc., 4150 Network Circle, Santa Clara, California 95054, U.S.A. All rights reserved.

Use is subject to license terms below.

This distribution may include materials developed by third parties.

Sun, Sun Microsystems, the Sun logo and Solaris are trademarks or registered trademarks of Sun Microsystems, Inc. in the U.S. and other countries.

Redistribution and use in source and binary forms, with or without modification, are permitted provided that the following conditions are met:

* Redistributions of source code must retain the above copyright notice, this list of conditions and the following disclaimer.
* Redistributions in binary form must reproduce the above copyright notice, this list of conditions and the following disclaimer in the documentation and/or other materials provided with the distribution.
* Neither the name of the Sun Microsystems, Inc. nor the names of its contributors may be used to endorse or promote products derived from this software without specific prior written permission.

THIS SOFTWARE IS PROVIDED BY THE COPYRIGHT HOLDERS AND CONTRIBUTORS ``AS IS'' AND ANY EXPRESS OR IMPLIED WARRANTIES, INCLUDING, BUT NOT LIMITED TO, THE IMPLIED WARRANTIES OF MERCHANTABILITY AND FITNESS FOR A PARTICULAR PURPOSE ARE DISCLAIMED. IN NO EVENT SHALL THE COPYRIGHT HOLDERS OR CONTRIBUTORS BE LIABLE FOR ANY DIRECT, INDIRECT, INCIDENTAL, SPECIAL, EXEMPLARY, OR CONSEQUENTIAL DAMAGES (INCLUDING, BUT NOT LIMITED TO, PROCUREMENT OF SUBSTITUTE GOODS OR SERVICES; LOSS OF USE, DATA, OR PROFITS; OR BUSINESS INTERRUPTION) HOWEVER CAUSED AND ON ANY THEORY OF LIABILITY, WHETHER IN CONTRACT, STRICT LIABILITY, OR TORT (INCLUDING NEGLIGENCE OR OTHERWISE) ARISING IN ANY WAY OUT OF THE USE OF THIS SOFTWARE, EVEN IF ADVISED OF THE POSSIBILITY OF SUCH DAMAGE.

---- Part 5: Sparta, Inc copyright notice (BSD) -----

Copyright (c) 2003-2012, Sparta, Inc

All rights reserved.

Redistribution and use in source and binary forms, with or without modification, are permitted provided that the following conditions are met:

* Redistributions of source code must retain the above copyright notice, this list of conditions and the following disclaimer.
* Redistributions in binary form must reproduce the above copyright notice, this list of conditions and the following disclaimer in the documentation and/or other materials provided with the distribution.
* Neither the name of Sparta, Inc nor the names of its contributors may be used to endorse or promote products derived from this software without specific prior written permission.

THIS SOFTWARE IS PROVIDED BY THE COPYRIGHT HOLDERS AND CONTRIBUTORS ``AS IS'' AND ANY EXPRESS OR IMPLIED WARRANTIES, INCLUDING, BUT NOT LIMITED TO, THE IMPLIED WARRANTIES OF MERCHANTABILITY AND FITNESS FOR A PARTICULAR PURPOSE ARE DISCLAIMED. IN NO EVENT SHALL THE COPYRIGHT HOLDERS OR CONTRIBUTORS BE LIABLE FOR ANY DIRECT, INDIRECT, INCIDENTAL, SPECIAL, EXEMPLARY, OR CONSEQUENTIAL DAMAGES (INCLUDING, BUT NOT LIMITED TO, PROCUREMENT OF SUBSTITUTE GOODS OR SERVICES; LOSS OF USE, DATA, OR PROFITS; OR BUSINESS INTERRUPTION) HOWEVER CAUSED AND ON ANY THEORY OF LIABILITY, WHETHER IN CONTRACT, STRICT LIABILITY, OR TORT (INCLUDING NEGLIGENCE OR OTHERWISE) ARISING IN ANY WAY OUT OF THE USE OF THIS SOFTWARE, EVEN IF ADVISED OF THE POSSIBILITY OF SUCH DAMAGE.

---- Part 6: Cisco/BUPTNIC copyright notice (BSD) -----

Copyright (c) 2004, Cisco, Inc and Information Network Center of Beijing University of Posts and Telecommunications.

All rights reserved.

Redistribution and use in source and binary forms, with or without modification, are permitted provided that the following conditions are met:

* Redistributions of source code must retain the above copyright notice, this list of conditions and the following disclaimer.
* Redistributions in binary form must reproduce the above copyright notice, this list of conditions and the following disclaimer in the documentation and/or other materials provided with the distribution.
* Neither the name of Cisco, Inc, Beijing University of Posts and Telecommunications, nor the names of their contributors may be used to endorse or promote products derived from this software without specific prior written permission.

THIS SOFTWARE IS PROVIDED BY THE COPYRIGHT HOLDERS AND CONTRIBUTORS ``AS IS'' AND ANY EXPRESS OR IMPLIED WARRANTIES, INCLUDING, BUT NOT LIMITED TO, THE IMPLIED WARRANTIES OF MERCHANTABILITY AND FITNESS FOR A PARTICULAR PURPOSE ARE DISCLAIMED. IN NO EVENT SHALL THE COPYRIGHT HOLDERS OR CONTRIBUTORS BE LIABLE FOR ANY DIRECT, INDIRECT, INCIDENTAL, SPECIAL, EXEMPLARY, OR CONSEQUENTIAL DAMAGES (INCLUDING, BUT NOT LIMITED TO, PROCUREMENT OF SUBSTITUTE GOODS OR SERVICES; LOSS OF USE, DATA, OR PROFITS; OR BUSINESS INTERRUPTION) HOWEVER CAUSED AND ON ANY THEORY OF LIABILITY, WHETHER IN CONTRACT, STRICT LIABILITY, OR TORT (INCLUDING NEGLIGENCE OR OTHERWISE) ARISING IN ANY WAY OUT OF THE USE OF THIS SOFTWARE, EVEN IF ADVISED OF THE POSSIBILITY OF SUCH DAMAGE.

---- Part 7: Fabasoft R&D Software GmbH & Co KG copyright notice (BSD) -----

Copyright (c) Fabasoft R&D Software GmbH & Co KG, 2003 oss@fabasoft.com

Author: Bernhard Penz <bernhard.penz@fabasoft.com>

Redistribution and use in source and binary forms, with or without modification, are permitted provided that the following conditions are met:

* Redistributions of source code must retain the above copyright notice, this list of conditions and the following disclaimer.

* Redistributions in binary form must reproduce the above copyright notice, this list of conditions and the following disclaimer in the documentation and/or other materials provided with the distribution.
* The name of Fabasoft R&D Software GmbH & Co KG or any of its subsidiaries, brand or product names may not be used to endorse or promote products derived from this software without specific prior written permission.

THIS SOFTWARE IS PROVIDED BY THE COPYRIGHT HOLDER ``AS IS'' AND ANY EXPRESS OR IMPLIED WARRANTIES, INCLUDING, BUT NOT LIMITED TO, THE IMPLIED WARRANTIES OF MERCHANTABILITY AND FITNESS FOR A PARTICULAR PURPOSE ARE DISCLAIMED. IN NO EVENT SHALL THE COPYRIGHT HOLDER BE LIABLE FOR ANY DIRECT, INDIRECT, INCIDENTAL, SPECIAL, EXEMPLARY, OR CONSEQUENTIAL DAMAGES (INCLUDING, BUT NOT LIMITED TO, PROCUREMENT OF SUBSTITUTE GOODS OR SERVICES; LOSS OF USE, DATA, OR PROFITS; OR BUSINESS INTERRUPTION) HOWEVER CAUSED AND ON ANY THEORY OF LIABILITY, WHETHER IN CONTRACT, STRICT LIABILITY, OR TORT (INCLUDING NEGLIGENCE OR OTHERWISE) ARISING IN ANY WAY OUT OF THE USE OF THIS SOFTWARE, EVEN IF ADVISED OF THE POSSIBILITY OF SUCH DAMAGE.

---- Part 8: Apple Inc. copyright notice (BSD) -----

Copyright (c) 2007 Apple Inc. All rights reserved.

Redistribution and use in source and binary forms, with or without modification, are permitted provided that the following conditions are met:

1. Redistributions of source code must retain the above copyright notice, this list of conditions and the following disclaimer.
2. Redistributions in binary form must reproduce the above copyright notice, this list of conditions and the following disclaimer in the documentation and/or other materials provided with the distribution.
3. Neither the name of Apple Inc. ("Apple") nor the names of its contributors may be used to endorse or promote products derived from this software without specific prior written permission.

THIS SOFTWARE IS PROVIDED BY APPLE AND ITS CONTRIBUTORS "AS IS" AND ANY EXPRESS OR IMPLIED WARRANTIES, INCLUDING, BUT NOT LIMITED TO, THE IMPLIED WARRANTIES OF MERCHANTABILITY AND FITNESS FOR A PARTICULAR PURPOSE ARE DISCLAIMED. IN NO EVENT SHALL APPLE OR ITS CONTRIBUTORS BE LIABLE FOR ANY DIRECT, INDIRECT, INCIDENTAL, SPECIAL, EXEMPLARY, OR CONSEQUENTIAL DAMAGES (INCLUDING, BUT NOT LIMITED TO, PROCUREMENT OF SUBSTITUTE GOODS OR SERVICES; LOSS OF USE, DATA, OR PROFITS; OR BUSINESS INTERRUPTION) HOWEVER CAUSED AND ON ANY THEORY OF LIABILITY, WHETHER IN CONTRACT, STRICT LIABILITY, OR TORT (INCLUDING NEGLIGENCE OR OTHERWISE) ARISING IN ANY WAY OUT OF THE USE OF THIS SOFTWARE, EVEN IF ADVISED OF THE POSSIBILITY OF SUCH DAMAGE.

---- Part 9: ScienceLogic, LLC copyright notice (BSD) -----

Copyright (c) 2009, ScienceLogic, LLC

All rights reserved.

Redistribution and use in source and binary forms, with or without modification, are permitted provided that the following conditions are met:

* Redistributions of source code must retain the above copyright notice, this list of conditions and the following disclaimer.
* Redistributions in binary form must reproduce the above copyright notice, this list of conditions and the following disclaimer in the documentation and/or other materials provided with the distribution.
* Neither the name of ScienceLogic, LLC nor the names of its contributors may be used to endorse or promote products derived from this software without specific prior written permission.

THIS SOFTWARE IS PROVIDED BY THE COPYRIGHT HOLDERS AND CONTRIBUTORS "AS IS" AND ANY EXPRESS OR IMPLIED WARRANTIES, INCLUDING, BUT NOT LIMITED TO, THE IMPLIED WARRANTIES OF MERCHANTABILITY AND FITNESS FOR A PARTICULAR PURPOSE ARE DISCLAIMED. IN NO EVENT SHALL THE COPYRIGHT HOLDERS OR CONTRIBUTORS BE LIABLE FOR ANY DIRECT, INDIRECT, INCIDENTAL, SPECIAL, EXEMPLARY, OR CONSEQUENTIAL DAMAGES (INCLUDING, BUT NOT LIMITED TO, PROCUREMENT OF SUBSTITUTE GOODS OR SERVICES; LOSS OF USE, DATA, OR PROFITS; OR BUSINESS INTERRUPTION) HOWEVER CAUSED AND ON ANY THEORY OF LIABILITY, WHETHER IN CONTRACT, STRICT LIABILITY, OR TORT (INCLUDING NEGLIGENCE OR OTHERWISE) ARISING IN ANY WAY OUT OF THE USE OF THIS SOFTWARE, EVEN IF ADVISED OF THE POSSIBILITY OF SUCH DAMAGE.

LEADTOOLS

Copyright (C) 1991-2009 LEAD Technologies, Inc.

CMap Resources

Copyright 1990-2009 Adobe Systems Incorporated.
All rights reserved.

Copyright 1990-2010 Adobe Systems Incorporated.
All rights reserved.

Redistribution and use in source and binary forms, with or without modification, are permitted provided that the following conditions are met:

Redistributions of source code must retain the above copyright notice, this list of conditions and the following disclaimer.

Redistributions in binary form must reproduce the above copyright notice, this list of conditions and the following disclaimer in the documentation and/or other materials provided with the distribution.

Neither the name of Adobe Systems Incorporated nor the names of its contributors may be used to endorse or promote products derived from this software without specific prior written permission.

THIS SOFTWARE IS PROVIDED BY THE COPYRIGHT HOLDERS AND CONTRIBUTORS "AS IS" AND ANY EXPRESS OR IMPLIED WARRANTIES, INCLUDING, BUT NOT LIMITED TO, THE IMPLIED WARRANTIES OF MERCHANTABILITY AND FITNESS FOR A PARTICULAR PURPOSE ARE

DISCLAIMED. IN NO EVENT SHALL THE COPYRIGHT HOLDER OR CONTRIBUTORS BE LIABLE FOR ANY DIRECT, INDIRECT, INCIDENTAL, SPECIAL, EXEMPLARY, OR CONSEQUENTIAL DAMAGES (INCLUDING, BUT NOT LIMITED TO, PROCUREMENT OF SUBSTITUTE GOODS OR SERVICES; LOSS OF USE, DATA, OR PROFITS; OR BUSINESS INTERRUPTION) HOWEVER CAUSED AND ON ANY THEORY OF LIABILITY, WHETHER IN CONTRACT, STRICT LIABILITY, OR TORT (INCLUDING NEGLIGENCE OR OTHERWISE) ARISING IN ANY WAY OUT OF THE USE OF THIS SOFTWARE, EVEN IF ADVISED OF THE POSSIBILITY OF SUCH DAMAGE.

MIT License

Copyright (c) 1998, 1999, 2000 Thai Open Source Software Center Ltd

Permission is hereby granted, free of charge, to any person obtaining a copy of this software and associated documentation files (the "Software"), to deal in the Software without restriction, including without limitation the rights to use, copy, modify, merge, publish, distribute, sublicense, and/or sell copies of the Software, and to permit persons to whom the Software is furnished to do so, subject to the following conditions:

The above copyright notice and this permission notice shall be included in all copies or substantial portions of the Software.

THE SOFTWARE IS PROVIDED "AS IS", WITHOUT WARRANTY OF ANY KIND, EXPRESS OR IMPLIED, INCLUDING BUT NOT LIMITED TO THE WARRANTIES OF MERCHANTABILITY, FITNESS FOR A PARTICULAR PURPOSE AND NONINFRINGEMENT. IN NO EVENT SHALL THE AUTHORS OR COPYRIGHT HOLDERS BE LIABLE FOR ANY CLAIM, DAMAGES OR OTHER LIABILITY, WHETHER IN AN ACTION OF CONTRACT, TORT OR OTHERWISE, ARISING FROM, OUT OF OR IN CONNECTION WITH THE SOFTWARE OR THE USE OR OTHER DEALINGS IN THE SOFTWARE.

Copyright 2000 Computing Research Labs, New Mexico State University

Copyright 2001-2015 Francesco Zappa Nardelli

Permission is hereby granted, free of charge, to any person obtaining a copy of this software and associated documentation files (the "Software"), to deal in the Software without restriction, including without limitation the rights to use, copy, modify, merge, publish, distribute, sublicense, and/or sell copies of the Software, and to permit persons to whom the Software is furnished to do so, subject to the following conditions:

The above copyright notice and this permission notice shall be included in all copies or substantial portions of the Software.

THE SOFTWARE IS PROVIDED "AS IS", WITHOUT WARRANTY OF ANY KIND, EXPRESS OR IMPLIED, INCLUDING BUT NOT LIMITED TO THE WARRANTIES OF MERCHANTABILITY, FITNESS FOR A PARTICULAR PURPOSE AND NONINFRINGEMENT. IN NO EVENT SHALL THE COMPUTING RESEARCH LAB OR NEW MEXICO STATE UNIVERSITY BE LIABLE FOR ANY CLAIM, DAMAGES OR OTHER LIABILITY, WHETHER IN AN ACTION OF CONTRACT, TORT OR OTHERWISE, ARISING FROM, OUT OF OR IN CONNECTION WITH THE SOFTWARE OR THE USE OR OTHER DEALINGS IN THE SOFTWARE.

Written by Joel Sherrill <joel@OARcorp.com>.

COPYRIGHT (c) 1989-2000.

On-Line Applications Research Corporation (OAR).

Permission to use, copy, modify, and distribute this software for any purpose without fee is hereby granted, provided that this entire notice is included in all copies of any software which is or includes a copy or modification of this software.

THIS SOFTWARE IS BEING PROVIDED "AS IS", WITHOUT ANY EXPRESS OR IMPLIED WARRANTY. IN PARTICULAR, THE AUTHOR MAKES NO REPRESENTATION OR WARRANTY OF ANY KIND CONCERNING THE MERCHANTABILITY OF THIS SOFTWARE OR ITS FITNESS FOR ANY PARTICULAR PURPOSE.

(1) Red Hat Incorporated

Copyright (c) 1994-2009 Red Hat, Inc. All rights reserved.

This copyrighted material is made available to anyone wishing to use, modify, copy, or redistribute it subject to the terms and conditions of the BSD License. This program is distributed in the hope that it will be useful, but WITHOUT ANY WARRANTY expressed or implied, including the implied warranties of MERCHANTABILITY or FITNESS FOR A PARTICULAR PURPOSE. A copy of this license is available at http://www.opensource.org/licenses. Any Red Hat trademarks that are incorporated in the source code or documentation are not subject to the BSD License and may only be used or replicated with the express permission of Red Hat, Inc.

(2) University of California, Berkeley

Copyright (c) 1981-2000 The Regents of the University of California.

All rights reserved.

Redistribution and use in source and binary forms, with or without modification, are permitted provided that the following conditions are met:

* Redistributions of source code must retain the above copyright notice, this list of conditions and the following disclaimer.
* Redistributions in binary form must reproduce the above copyright notice, this list of conditions and the following disclaimer in the documentation and/or other materials provided with the distribution.
* Neither the name of the University nor the names of its contributors may be used to endorse or promote products derived from this software without specific prior written permission.

THIS SOFTWARE IS PROVIDED BY THE COPYRIGHT HOLDERS AND CONTRIBUTORS "AS IS" AND ANY EXPRESS OR IMPLIED WARRANTIES, INCLUDING, BUT NOT LIMITED TO, THE IMPLIED WARRANTIES OF MERCHANTABILITY AND FITNESS FOR A PARTICULAR PURPOSE ARE DISCLAIMED. IN NO EVENT SHALL THE COPYRIGHT OWNER OR CONTRIBUTORS BE LIABLE FOR ANY DIRECT, INDIRECT, INCIDENTAL, SPECIAL, EXEMPLARY, OR CONSEQUENTIAL DAMAGES (INCLUDING, BUT NOT LIMITED TO, PROCUREMENT OF SUBSTITUTE GOODS OR SERVICES; LOSS OF USE, DATA, OR PROFITS; OR BUSINESS INTERRUPTION) HOWEVER CAUSED AND ON ANY THEORY OF LIABILITY, WHETHER IN CONTRACT, STRICT LIABILITY, OR TORT (INCLUDING NEGLIGENCE OR OTHERWISE) ARISING IN ANY WAY OUT OF THE USE OF THIS SOFTWARE, EVEN IF ADVISED OF THE POSSIBILITY OF SUCH DAMAGE.

The FreeType Project LICENSE

2006-Jan-27

Copyright 1996-2002, 2006 by

David Turner, Robert Wilhelm, and Werner Lemberg

Introduction

==========

The FreeType Project is distributed in several archive packages; some of them may contain, in addition to the FreeType font engine, various tools and contributions which rely on, or relate to, the FreeType Project.

This license applies to all files found in such packages, and which do not fall under their own explicit license. The license affects thus the FreeType font engine, the test programs, documentation and makefiles, at the very least.

This license was inspired by the BSD, Artistic, and IJG (Independent JPEG Group) licenses, which all encourage inclusion and use of free software in commercial and freeware products alike. As a consequence, its main points are that:

o We don't promise that this software works. However, we will be interested in any kind of bug reports. (`as is' distribution)

o You can use this software for whatever you want, in parts or full form, without having to pay us. (`royalty-free' usage)

o You may not pretend that you wrote this software. If you use it, or only parts of it, in a program, you must acknowledge somewhere in your documentation that you have used the FreeType code. (`credits')

We specifically permit and encourage the inclusion of this software, with or without modifications, in commercial products.

We disclaim all warranties covering The FreeType Project and assume no liability related to The FreeType Project.

Finally, many people asked us for a preferred form for a credit/disclaimer to use in compliance with this license. We thus encourage you to use the following text:

"""

Portions of this software are copyright © <year> The FreeType

Project (www.freetype.org). All rights reserved.

"""

Please replace <year> with the value from the FreeType version you actually use.

Legal Terms

==========

0. Definitions

Throughout this license, the terms `package', `FreeType Project', and `FreeType archive' refer to the set of files originally distributed by the authors (David Turner, Robert Wilhelm, and Werner Lemberg) as the `FreeType Project', be they named as alpha, beta or final release.

`You' refers to the licensee, or person using the project, where `using' is a generic term including compiling the project's source code as well as linking it to form a `program' or `executable'.

This program is referred to as `a program using the FreeType engine'.

This license applies to all files distributed in the original FreeType Project, including all source code, binaries and documentation, unless otherwise stated in the file in its original, unmodified form as distributed in the original archive.

If you are unsure whether or not a particular file is covered by this license, you must contact us to verify this.

The FreeType Project is copyright (C) 1996-2000 by David Turner, Robert Wilhelm, and Werner Lemberg. All rights reserved except as specified below.

1. No Warranty

THE FREETYPE PROJECT IS PROVIDED `AS IS' WITHOUT WARRANTY OF ANY KIND, EITHER EXPRESS OR IMPLIED, INCLUDING, BUT NOT LIMITED TO, WARRANTIES OF MERCHANTABILITY AND FITNESS FOR A PARTICULAR PURPOSE. IN NO EVENT WILL ANY OF THE AUTHORS OR COPYRIGHT HOLDERS BE LIABLE FOR ANY DAMAGES CAUSED BY THE USE OR THE INABILITY TO USE, OF THE FREETYPE PROJECT.

2. Redistribution

This license grants a worldwide, royalty-free, perpetual and irrevocable right and license to use, execute, perform, compile, display, copy, create derivative works of, distribute and sublicense the FreeType Project (in both source and object code forms) and derivative works thereof for any purpose; and to authorize others to exercise some or all of the rights granted herein, subject to the following conditions:

o Redistribution of source code must retain this license file (`FTL.TXT') unaltered; any additions, deletions or changes to the original files must be clearly indicated in accompanying documentation. The copyright notices of the unaltered, original files must be preserved in all copies of source files.

o Redistribution in binary form must provide a disclaimer that states that the software is based in part of the work of the FreeType Team, in the distribution documentation. We also encourage you to put an URL to the FreeType web page in your documentation, though this isn't mandatory.

These conditions apply to any software derived from or based on the FreeType Project, not just the unmodified files. If you use our work, you must acknowledge us. However, no fee need be paid to us.

3. Advertising

Neither the FreeType authors and contributors nor you shall use the name of the other for commercial, advertising, or promotional purposes without specific prior written permission.

We suggest, but do not require, that you use one or more of the following phrases to refer to this software in your documentation or advertising materials: `FreeType Project', `FreeType Engine', `FreeType library', or `FreeType Distribution'.

As you have not signed this license, you are not required to accept it. However, as the FreeType Project is copyrighted material, only this license, or another one contracted with the authors, grants you the right to use, distribute, and modify it.

Therefore, by using, distributing, or modifying the FreeType Project, you indicate that you understand and accept all the terms of this license.

4. Contacts

There are two mailing lists related to FreeType:

o freetype@nongnu.org

Discusses general use and applications of FreeType, as well as future and wanted additions to the library and distribution.

If you are looking for support, start in this list if you haven't found anything to help you in the documentation.

o freetype-devel@nongnu.org

Discusses bugs, as well as engine internals, design issues, specific licenses, porting, etc.

Our home page can be found at

http://www.freetype.org

--- end of FTL.TXT ---

The TWAIN Toolkit is distributed as is. The developer and distributors of the TWAIN Toolkit expressly disclaim all implied, express or statutory warranties including, without limitation, the implied warranties of merchantability, noninfringement of third party rights and fitness for a particular purpose. Neither the developers nor the distributors will be liable for damages, whether direct, indirect, special, incidental, or consequential, as a result of the reproduction, modification, distribution or other use of the TWAIN Toolkit.

JSON for Modern C++

Copyright (c) 2013-2017 Niels Lohmann

Permission is hereby granted, free of charge, to any person obtaining a copy of this software and associated documentation files (the "Software"), to deal in the Software without restriction, including without limitation the rights to use, copy, modify, merge, publish, distribute, sublicense, and/or sell copies of the Software, and to permit persons to whom the Software is furnished to do so, subject to the following conditions:

The above copyright notice and this permission notice shall be included in all copies or substantial portions of the Software.

THE SOFTWARE IS PROVIDED "AS IS", WITHOUT WARRANTY OF ANY KIND, EXPRESS OR IMPLIED, INCLUDING BUT NOT LIMITED TO THE WARRANTIES OF MERCHANTABILITY, FITNESS FOR A PARTICULAR PURPOSE AND NONINFRINGEMENT. IN NO EVENT SHALL THE AUTHORS OR COPYRIGHT HOLDERS BE LIABLE FOR ANY CLAIM, DAMAGES OR OTHER LIABILITY, WHETHER IN AN ACTION OF CONTRACT, TORT OR OTHERWISE, ARISING FROM, OUT OF OR IN CONNECTION WITH THE SOFTWARE OR THE USE OR OTHER DEALINGS IN THE SOFTWARE.

Copyright (c) 2011 - 2015 ARM LIMITED

All rights reserved.

Redistribution and use in source and binary forms, with or without modification, are permitted provided that the following conditions are met:

- Redistributions of source code must retain the above copyright notice, this list of conditions and the following disclaimer.
- Redistributions in binary form must reproduce the above copyright notice, this list of conditions and the following disclaimer in the documentation and/or other materials provided with the distribution.
- Neither the name of ARM nor the names of its contributors may be used to endorse or promote products derived from this software without specific prior written permission.

THIS SOFTWARE IS PROVIDED BY THE COPYRIGHT HOLDERS AND CONTRIBUTORS "AS IS" AND ANY EXPRESS OR IMPLIED WARRANTIES, INCLUDING, BUT NOT LIMITED TO, THE IMPLIED WARRANTIES OF MERCHANTABILITY AND FITNESS FOR A PARTICULAR PURPOSE ARE DISCLAIMED. IN NO EVENT SHALL COPYRIGHT HOLDERS AND CONTRIBUTORS BE LIABLE FOR ANY DIRECT, INDIRECT, INCIDENTAL, SPECIAL, EXEMPLARY, OR CONSEQUENTIAL DAMAGES (INCLUDING, BUT NOT LIMITED TO, PROCUREMENT OF SUBSTITUTE GOODS OR SERVICES; LOSS OF USE, DATA, OR PROFITS; OR BUSINESS INTERRUPTION) HOWEVER CAUSED AND ON ANY THEORY OF LIABILITY, WHETHER IN CONTRACT, STRICT LIABILITY, OR TORT (INCLUDING NEGLIGENCE OR OTHERWISE) ARISING IN ANY WAY OUT OF THE USE OF THIS SOFTWARE, EVEN IF ADVISED OF THE POSSIBILITY OF SUCH DAMAGE.

Copyright (c) 2014, Kenneth MacKay

All rights reserved.

Redistribution and use in source and binary forms, with or without modification, are permitted provided that the following conditions are met:

* Redistributions of source code must retain the above copyright notice, this list of conditions and the following disclaimer.
* Redistributions in binary form must reproduce the above copyright notice, this list of conditions and the following disclaimer in the documentation and/or other materials provided with the distribution.

THIS SOFTWARE IS PROVIDED BY THE COPYRIGHT HOLDERS AND CONTRIBUTORS "AS IS" AND ANY EXPRESS OR IMPLIED WARRANTIES, INCLUDING, BUT NOT LIMITED TO, THE IMPLIED WARRANTIES OF MERCHANTABILITY AND FITNESS FOR A PARTICULAR PURPOSE ARE DISCLAIMED. IN NO EVENT SHALL THE COPYRIGHT HOLDER OR CONTRIBUTORS BE LIABLE FOR ANY DIRECT, INDIRECT, INCIDENTAL, SPECIAL, EXEMPLARY, OR CONSEQUENTIAL DAMAGES (INCLUDING, BUT NOT LIMITED TO, PROCUREMENT OF SUBSTITUTE GOODS OR SERVICES; LOSS OF USE, DATA, OR PROFITS; OR BUSINESS INTERRUPTION) HOWEVER CAUSED AND ON ANY THEORY OF LIABILITY, WHETHER IN CONTRACT, STRICT LIABILITY, OR TORT (INCLUDING NEGLIGENCE OR OTHERWISE) ARISING IN ANY WAY OUT OF THE USE OF THIS SOFTWARE, EVEN IF ADVISED OF THE POSSIBILITY OF SUCH DAMAGE.

Copyright (c) 2006, CRYPTOGAMS by <appro@openssl.org> All rights reserved.

Redistribution and use in source and binary forms, with or without modification, are permitted provided that the following conditions are met:

* Redistributions of source code must retain copyright notices, this list of conditions and the following disclaimer.

* Redistributions in binary form must reproduce the above copyright notice, this list of conditions and the following disclaimer in the documentation and/or other materials provided with the distribution.
* Neither the name of the CRYPTOGAMS nor the names of its copyright holder and contributors may be used to endorse or promote products derived from this software without specific prior written permission.

ALTERNATIVELY, provided that this notice is retained in full, this product may be distributed under the terms of the GNU General Public License (GPL), in which case the provisions of the GPL apply INSTEAD OF those given above.

THIS SOFTWARE IS PROVIDED BY THE COPYRIGHT HOLDER AND CONTRIBUTORS "AS IS" AND ANY EXPRESS OR IMPLIED WARRANTIES, INCLUDING, BUT NOT LIMITED TO, THE IMPLIED WARRANTIES OF MERCHANTABILITY AND FITNESS FOR A PARTICULAR PURPOSE ARE DISCLAIMED. IN NO EVENT SHALL THE COPYRIGHT OWNER OR CONTRIBUTORS BE LIABLE FOR ANY DIRECT, INDIRECT, INCIDENTAL, SPECIAL, EXEMPLARY, OR CONSEQUENTIAL DAMAGES (INCLUDING, BUT NOT LIMITED TO, PROCUREMENT OF SUBSTITUTE GOODS OR SERVICES; LOSS OF USE, DATA, OR PROFITS; OR BUSINESS INTERRUPTION) HOWEVER CAUSED AND ON ANY THEORY OF LIABILITY, WHETHER IN CONTRACT, STRICT LIABILITY, OR TORT (INCLUDING NEGLIGENCE OR OTHERWISE) ARISING IN ANY WAY OUT OF THE USE OF THIS SOFTWARE, EVEN IF ADVISED OF THE POSSIBILITY OF SUCH DAMAGE.

ISC License

Copyright (c) 2013-2017

Frank Denis <j at pureftpd dot org>

Permission to use, copy, modify, and/or distribute this software for any purpose with or without fee is hereby granted, provided that the above copyright notice and this permission notice appear in all copies.

THE SOFTWARE IS PROVIDED "AS IS" AND THE AUTHOR DISCLAIMS ALL WARRANTIES WITH REGARD TO THIS SOFTWARE INCLUDING ALL IMPLIED WARRANTIES OF MERCHANTABILITY AND FITNESS. IN NO EVENT SHALL THE AUTHOR BE LIABLE FOR ANY SPECIAL, DIRECT, INDIRECT, OR CONSEQUENTIAL DAMAGES OR ANY DAMAGES WHATSOEVER RESULTING FROM LOSS OF USE, DATA OR PROFITS, WHETHER IN AN ACTION OF CONTRACT, NEGLIGENCE OR OTHER TORTIOUS ACTION, ARISING OUT OF OR IN CONNECTION WITH THE USE OR PERFORMANCE OF THIS SOFTWARE.

Copyright (c) 2008 The NetBSD Foundation, Inc.

All rights reserved.

This code is derived from software contributed to The NetBSD Foundation
by Lennart Augustsson (lennart@augustsson.net) at
Carlstedt Research & Technology.

Redistribution and use in source and binary forms, with or without
modification, are permitted provided that the following conditions
are met:

1. Redistributions of source code must retain the above copyright
   notice, this list of conditions and the following disclaimer.

2. Redistributions in binary form must reproduce the above copyright notice, this list of conditions and the following disclaimer in the documentation and/or other materials provided with the distribution.

THIS SOFTWARE IS PROVIDED BY THE NETBSD FOUNDATION, INC. AND CONTRIBUTORS ``AS IS'' AND ANY EXPRESS OR IMPLIED WARRANTIES, INCLUDING, BUT NOT LIMITED TO, THE IMPLIED WARRANTIES OF MERCHANTABILITY AND FITNESS FOR A PARTICULAR PURPOSE ARE DISCLAIMED. IN NO EVENT SHALL THE FOUNDATION OR CONTRIBUTORS BE LIABLE FOR ANY DIRECT, INDIRECT, INCIDENTAL, SPECIAL, EXEMPLARY, OR CONSEQUENTIAL DAMAGES (INCLUDING, BUT NOT LIMITED TO, PROCUREMENT OF SUBSTITUTE GOODS OR SERVICES; LOSS OF USE, DATA, OR PROFITS; OR BUSINESS INTERRUPTION) HOWEVER CAUSED AND ON ANY THEORY OF LIABILITY, WHETHER IN CONTRACT, STRICT LIABILITY, OR TORT (INCLUDING NEGLIGENCE OR OTHERWISE) ARISING IN ANY WAY OUT OF THE USE OF THIS SOFTWARE, EVEN IF ADVISED OF THE POSSIBILITY OF SUCH DAMAGE.

Copyright (c) 2000 Intel Corporation

All rights reserved.

Redistribution and use in source and binary forms, with or without modification, are permitted provided that the following conditions are met:

* Redistributions of source code must retain the above copyright notice, this list of conditions and the following disclaimer.
* Redistributions in binary form must reproduce the above copyright notice, this list of conditions and the following disclaimer in the documentation and/or other materials provided with the distribution.
* Neither name of Intel Corporation nor the names of its contributors may be used to endorse or promote products derived from this software without specific prior written permission.

THIS SOFTWARE IS PROVIDED BY THE COPYRIGHT HOLDERS AND CONTRIBUTORS "AS IS" AND ANY EXPRESS OR IMPLIED WARRANTIES, INCLUDING, BUT NOT LIMITED TO, THE IMPLIED WARRANTIES OF MERCHANTABILITY AND FITNESS FOR A PARTICULAR PURPOSE ARE DISCLAIMED. IN NO EVENT SHALL INTEL OR CONTRIBUTORS BE LIABLE FOR ANY DIRECT, INDIRECT, INCIDENTAL, SPECIAL, EXEMPLARY, OR CONSEQUENTIAL DAMAGES (INCLUDING, BUT NOT LIMITED TO, PROCUREMENT OF SUBSTITUTE GOODS OR SERVICES; LOSS OF USE, DATA, OR PROFITS; OR BUSINESS INTERRUPTION) HOWEVER CAUSED AND ON ANY THEORY OF LIABILITY, WHETHER IN CONTRACT, STRICT LIABILITY, OR TORT (INCLUDING NEGLIGENCE OR OTHERWISE) ARISING IN ANY WAY OUT OF THE USE OF THIS SOFTWARE, EVEN IF ADVISED OF THE POSSIBILITY OF SUCH DAMAGE.

Lua

Copyright © 1994–2014 Lua.org, PUC-Rio.

Permission is hereby granted, free of charge, to any person obtaining a copy of this software and associated
documentation files (the "Software"), to deal in the Software without restriction, including without limitation

the
rights to use, copy, modify, merge, publish, distribute, sublicense, and/or sell copies of the Software, and to
permit persons to whom the Software is furnished to do so, subject to the following conditions:

The above copyright notice and this permission notice shall be included in all copies or substantial portions of
the Software.

THE SOFTWARE IS PROVIDED "AS IS", WITHOUT WARRANTY OF ANY KIND, EXPRESS OR IMPLIED,
INCLUDING BUT NOT LIMITED TO THE WARRANTIES OF MERCHANTABILITY, FITNESS FOR A PARTICULAR PURPOSE AND NONINFRINGEMENT. IN NO EVENT SHALL THE AUTHORS OR COPYRIGHT HOLDERS BE LIABLE FOR ANY CLAIM, DAMAGES OR OTHER LIABILITY, WHETHER IN AN
ACTION OF CONTRACT, TORT OR OTHERWISE, ARISING FROM, OUT OF OR IN CONNECTION WITH
THE SOFTWARE OR THE USE OR OTHER DEALINGS IN THE SOFTWARE.

LuaSocket

LuaSocket 2.0.2 license
Copyright © 2004-2007 Diego Nehab

Permission is hereby granted, free of charge, to any person obtaining a
copy of this software and associated documentation files (the "Software"),
to deal in the Software without restriction, including without limitation
the rights to use, copy, modify, merge, publish, distribute, sublicense,
and/or sell copies of the Software, and to permit persons to whom the
Software is furnished to do so, subject to the following conditions:

The above copyright notice and this permission notice shall be included in
all copies or substantial portions of the Software.

THE SOFTWARE IS PROVIDED "AS IS", WITHOUT WARRANTY OF ANY KIND, EXPRESS OR IMPLIED, INCLUDING BUT NOT LIMITED TO THE WARRANTIES OF MERCHANTABILITY, FITNESS FOR A PARTICULAR PURPOSE AND NONINFRINGEMENT. IN NO EVENT SHALL THE AUTHORS OR COPYRIGHT HOLDERS BE LIABLE FOR ANY CLAIM, DAMAGES OR OTHER LIABILITY, WHETHER IN AN ACTION OF CONTRACT, TORT OR OTHERWISE, ARISING FROM, OUT OF OR IN CONNECTION WITH THE SOFTWARE OR THE USE OR OTHER DEALINGS IN THE SOFTWARE.

LuneScript

Copyright (c) 2018 ifritJP

Permission is hereby granted, free of charge, to any person obtaining a copy
of this software and associated documentation files (the "Software"), to deal
in the Software without restriction, including without limitation the rights
to use, copy, modify, merge, publish, distribute, sublicense, and/or sell
copies of the Software, and to permit persons to whom the Software is
furnished to do so, subject to the following conditions:

The above copyright notice and this permission notice shall be included in all
copies or substantial portions of the Software.

THE SOFTWARE IS PROVIDED "AS IS", WITHOUT WARRANTY OF ANY KIND, EXPRESS OR IMPLIED, INCLUDING BUT NOT LIMITED TO THE WARRANTIES OF MERCHANTABILITY, FITNESS FOR A PARTICULAR PURPOSE AND NONINFRINGEMENT. IN NO EVENT SHALL THE AUTHORS OR COPYRIGHT HOLDERS BE LIABLE FOR ANY CLAIM, DAMAGES OR OTHER LIABILITY, WHETHER IN AN ACTION OF CONTRACT, TORT OR OTHERWISE, ARISING FROM, OUT OF OR IN CONNECTION WITH THE SOFTWARE OR THE USE OR OTHER DEALINGS IN THE SOFTWARE.

Copyright (c) 1998, 1999, 2000 Thai Open Source Software Center Ltd
and Clark Cooper

Copyright (c) 2001, 2002, 2003, 2004, 2005, 2006 Expat maintainers.

Permission is hereby granted, free of charge, to any person obtaining a copy of this software and associated
documentation files (the "Software"), to deal in the Software without restriction, including without limitation the
rights to use, copy, modify, merge, publish, distribute, sublicense, and/or sell copies of the Software, and to
permit persons to whom the Software is furnished to do so, subject to the following conditions:
The above copyright notice and this permission notice shall be included in all copies or substantial portions of
the Software.

THE SOFTWARE IS PROVIDED "AS IS", WITHOUT WARRANTY OF ANY KIND, EXPRESS OR IMPLIED,
INCLUDING BUT NOT LIMITED TO THE WARRANTIES OF MERCHANTABILITY, FITNESS FOR A PARTICULAR PURPOSE AND NONINFRINGEMENT. IN NO EVENT SHALL THE AUTHORS OR COPYRIGHT HOLDERS BE LIABLE FOR ANY CLAIM, DAMAGES OR OTHER LIABILITY, WHETHER IN AN
ACTION OF CONTRACT, TORT OR OTHERWISE, ARISING FROM, OUT OF OR IN CONNECTION WITH
THE SOFTWARE OR THE USE OR OTHER DEALINGS IN THE SOFTWARE.

Copyright 2004--2007, Google Inc.

Redistribution and use in source and binary forms, with or without modification, are permitted provided that the
following conditions are met:

1. Redistributions of source code must retain the above copyright notice, this list of conditions and the following
disclaimer.

2. Redistributions in binary form must reproduce the above copyright notice, this list of conditions and the following disclaimer in the documentation and/or other materials provided with the distribution.

3. The name of the author may not be used to endorse or promote products derived from this software without
specific prior written permission.

THIS SOFTWARE IS PROVIDED BY THE AUTHOR ``AS IS'' AND ANY EXPRESS OR IMPLIED WARRANTIES, INCLUDING, BUT NOT LIMITED TO, THE IMPLIED WARRANTIES OF MERCHANTABILITY
AND FITNESS FOR A PARTICULAR PURPOSE ARE DISCLAIMED. IN NO EVENT SHALL THE AUTHOR
BE LIABLE FOR ANY DIRECT, INDIRECT, INCIDENTAL, SPECIAL, EXEMPLARY, OR CONSEQUENTIAL
DAMAGES (INCLUDING, BUT NOT LIMITED TO, PROCUREMENT OF SUBSTITUTE GOODS OR SERVICES; LOSS OF USE, DATA, OR PROFITS; OR BUSINESS INTERRUPTION) HOWEVER CAUSED
AND ON ANY THEORY OF LIABILITY, WHETHER IN CONTRACT, STRICT LIABILITY, OR TORT (INCLUDING NEGLIGENCE OR OTHERWISE) ARISING IN ANY WAY OUT OF THE USE OF THIS SOFTWARE, EVEN IF ADVISED OF THE POSSIBILITY OF SUCH DAMAGE.

The following applies only to products supporting Wi-Fi.

(c) 2009-2013 by Jeff Mott. All rights reserved.

Redistribution and use in source and binary forms, with or without modification, are permitted provided that the following conditions are met:

* Redistributions of source code must retain the above copyright notice, this list of conditions, and the following disclaimer.
* Redistributions in binary form must reproduce the above copyright notice, this list of conditions, and the following disclaimer in the documentation or other materials provided with the distribution.
* Neither the name CryptoJS nor the names of its contributors may be used to endorse or promote products derived from this software without specific prior written permission.

THIS SOFTWARE IS PROVIDED BY THE COPYRIGHT HOLDERS AND CONTRIBUTORS "AS IS," AND ANY EXPRESS OR IMPLIED WARRANTIES, INCLUDING, BUT NOT LIMITED TO, THE IMPLIED WARRANTIES OF MERCHANTABILITY AND FITNESS FOR A PARTICULAR PURPOSE, ARE DISCLAIMED. IN NO EVENT SHALL THE COPYRIGHT HOLDER OR CONTRIBUTORS BE LIABLE FOR ANY DIRECT, INDIRECT, INCIDENTAL, SPECIAL, EXEMPLARY, OR CONSEQUENTIAL DAMAGES (INCLUDING, BUT NOT LIMITED TO, PROCUREMENT OF SUBSTITUTE GOODS OR SERVICES; LOSS OF USE, DATA, OR PROFITS; OR BUSINESS INTERRUPTION) HOWEVER CAUSED AND ON ANY THEORY OF LIABILITY, WHETHER IN CONTRACT, STRICT LIABILITY, OR TORT (INCLUDING NEGLIGENCE OR OTHERWISE) ARISING IN ANY WAY OUT OF THE USE OF THIS SOFTWARE, EVEN IF ADVISED OF THE POSSIBILITY OF SUCH DAMAGE.

Basic Operation

- Printing Photos from a Computer
- Printing Photos from a Smartphone/Tablet
- Copying

Printing Photos from a Computer

This section describes how to print photos with Easy-PhotoPrint Editor.

1. Open the paper support (A).

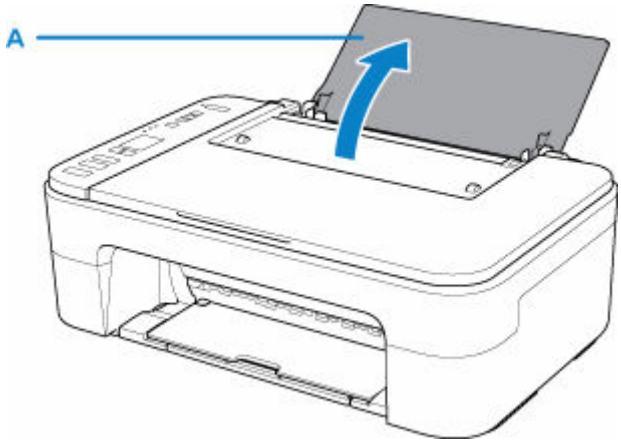

2. Pull out the paper output tray (B) and the output tray extension (C).

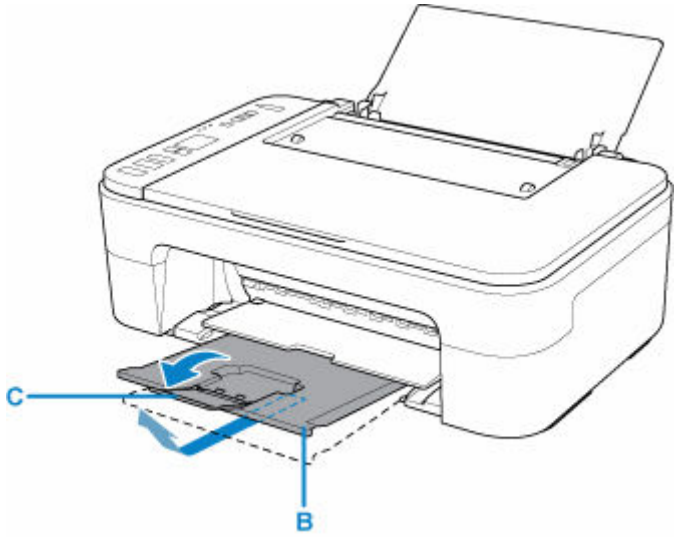

3. Load paper vertically against the far right of the rear tray WITH THE PRINT SIDE FACING YOU.

4. Adjust the paper guide (D) with the paper left side.

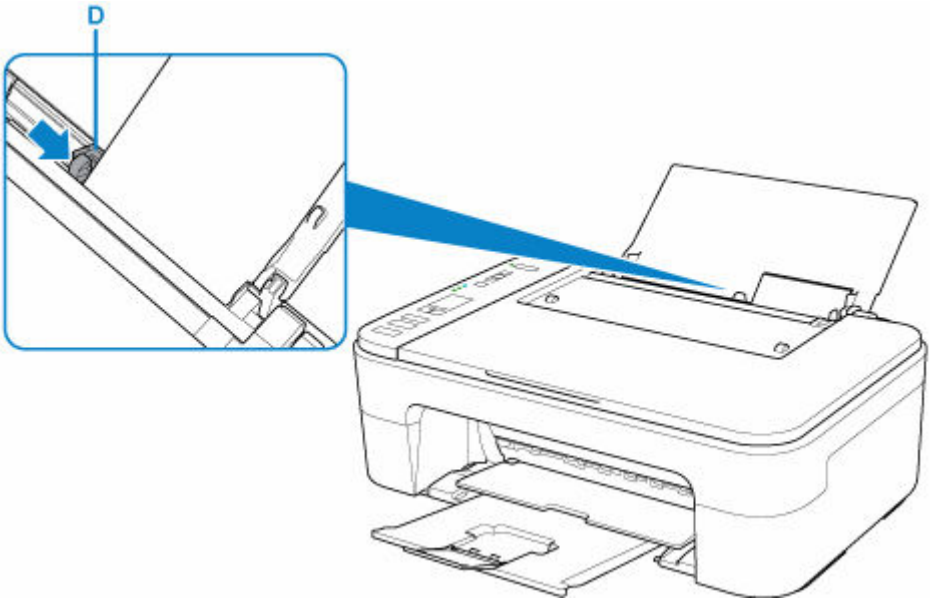

After loading paper on the rear tray, the Paper status and the current paper size flash on the LCD.

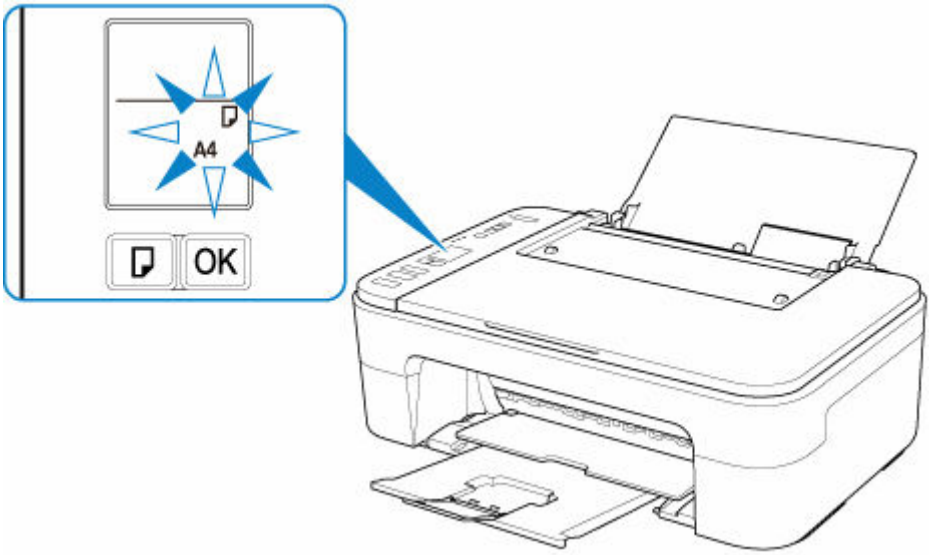

5. Press **Paper Select** button (E) to select a paper size according to the paper loaded on the rear tray and press **OK** button (F).

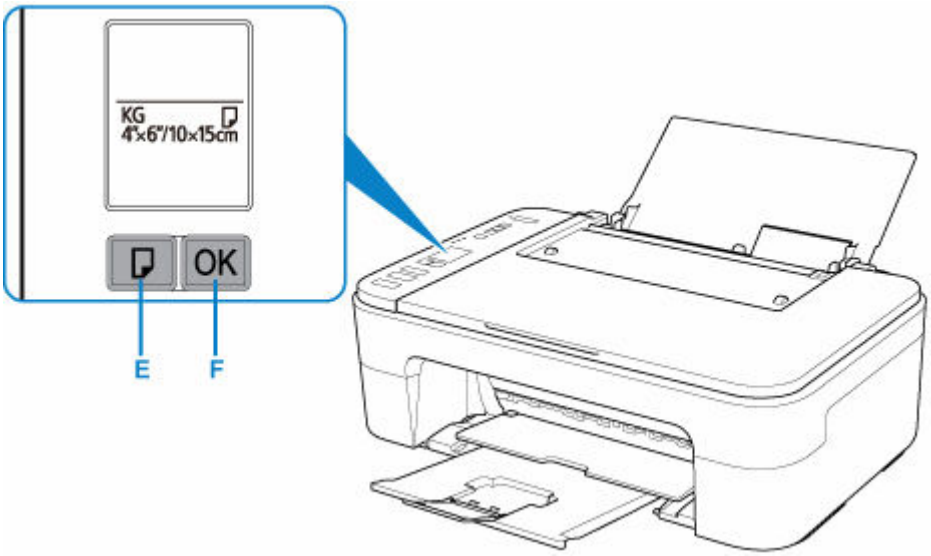

6. Start Easy-PhotoPrint Editor.

   For Windows:

   The procedure below is for a computer running the Windows 10 operating system.

   From the **Start** menu, select (**All apps** >) **Canon Utilities** > **Easy-PhotoPrint Editor**.

   For macOS:

   From the **Go** menu in **Finder**, select **Application** and double-click the **Canon Utilities** folder, the **Easy-PhotoPrint Editor** folder, and then the **Easy-PhotoPrint Editor** icon.

7. Click **Photos** icon (G).

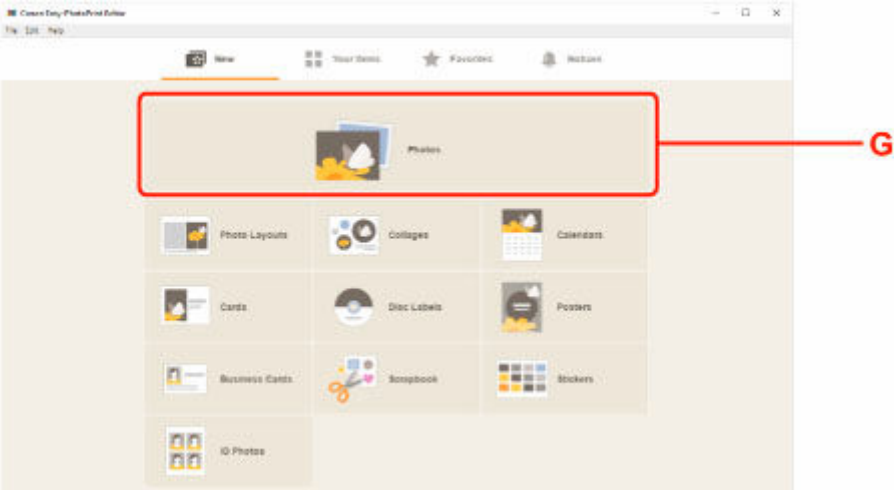

8. Click **Browse** (H) in **Computer:** and select folder with photos you want to print.

9. Click photos (I) you want to print and select **Open** (J).

For Windows:

To select two or more photos at a time, click photos while pressing the Ctrl key.

For macOS:

To select two or more photos at a time, click photos while pressing the command key.

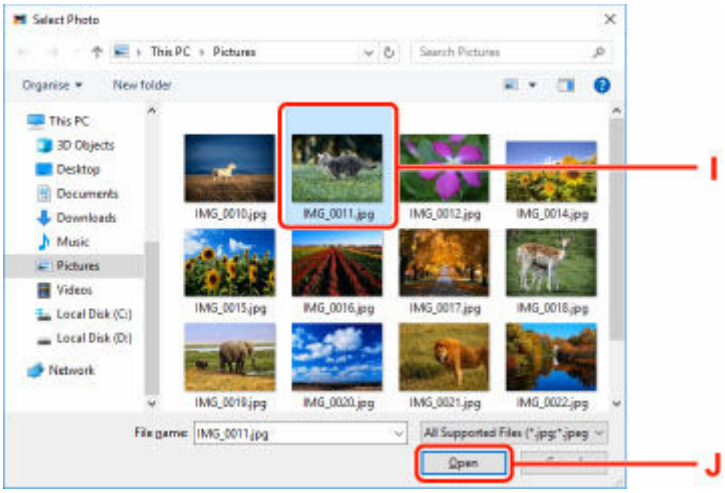

10. Specify number of copies and other options under **Print Settings** (K).

For Windows:

Specify the number of copies, your model name, the paper size, and other options.

For macOS:

Specify the number of copies, the paper size, and other options.

Note

- Selecting **Same No. of each photo** enables you to specify the number of copies for all photos with a single setting.
- Selecting **Same No. of each photo** disables the number-of-copies setting specified for each photo. When unchecked, the previous settings for each copy are re-enabled. for specifying the number of copies is also re-enabled.

11. Start printing.

For Windows:

Click **Print** (L).

For macOS:

Click **Next**. When the Print dialog appears, specify your model name, paper, and other options, and then click **Print**.

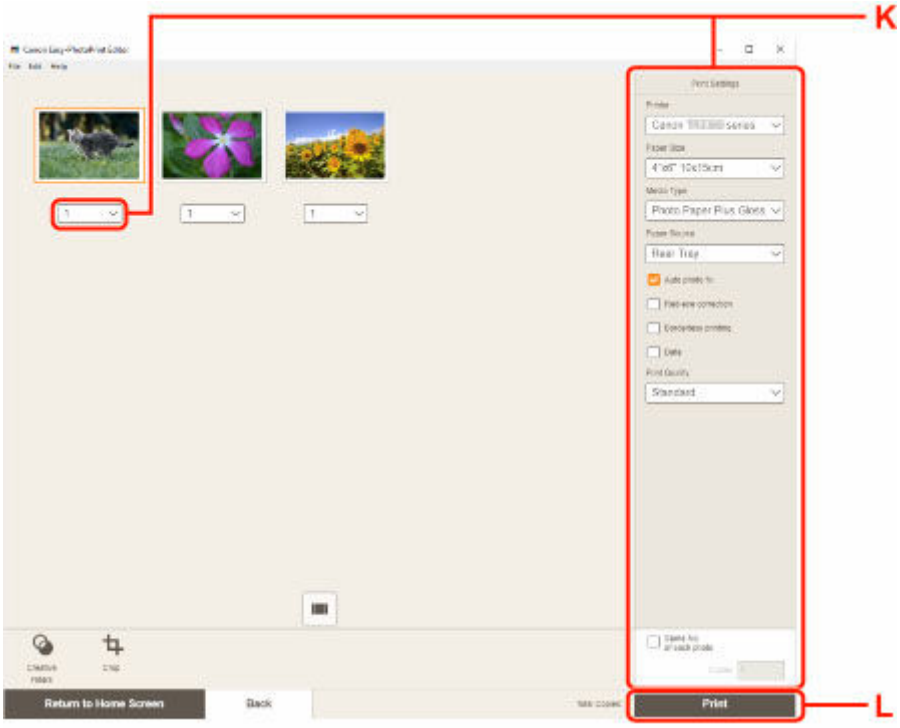

Note

- Easy-PhotoPrint Editor lets you easily create and print original collages, cards, or calendars using your favorite photos.

  ➡ Easy-PhotoPrint Editor Guide

Printing Photos from a Smartphone/Tablet

This section describes how to print photos with Canon PRINT Inkjet/SELPHY.

For details on how to download Canon PRINT Inkjet/SELPHY, see below.

➡ Print Photos from Your Smartphone

1. Open the paper support (A).

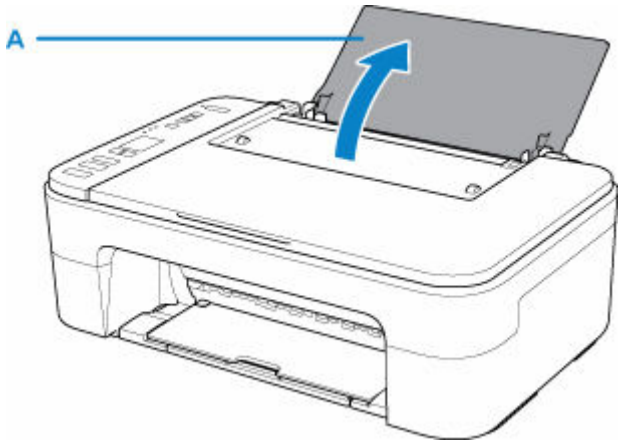

2. Pull out the paper output tray (B) and the output tray extension (C).

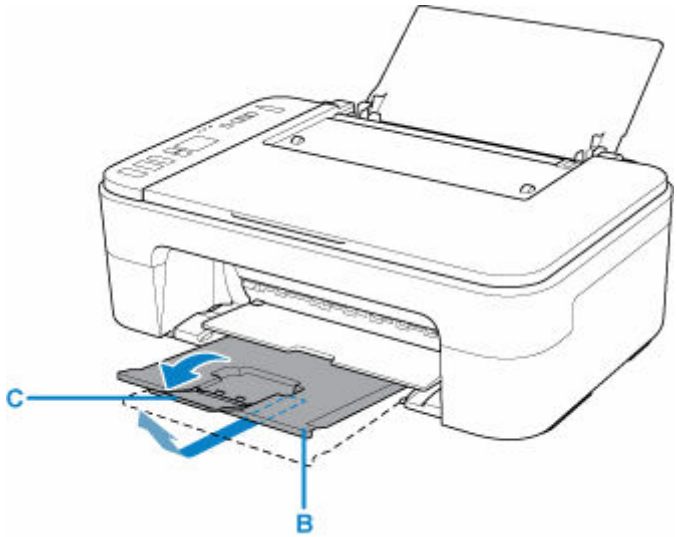

3. Load paper vertically against the far right of the rear tray WITH THE PRINT SIDE FACING YOU.

4. Adjust the paper guide (D) with the paper left side.

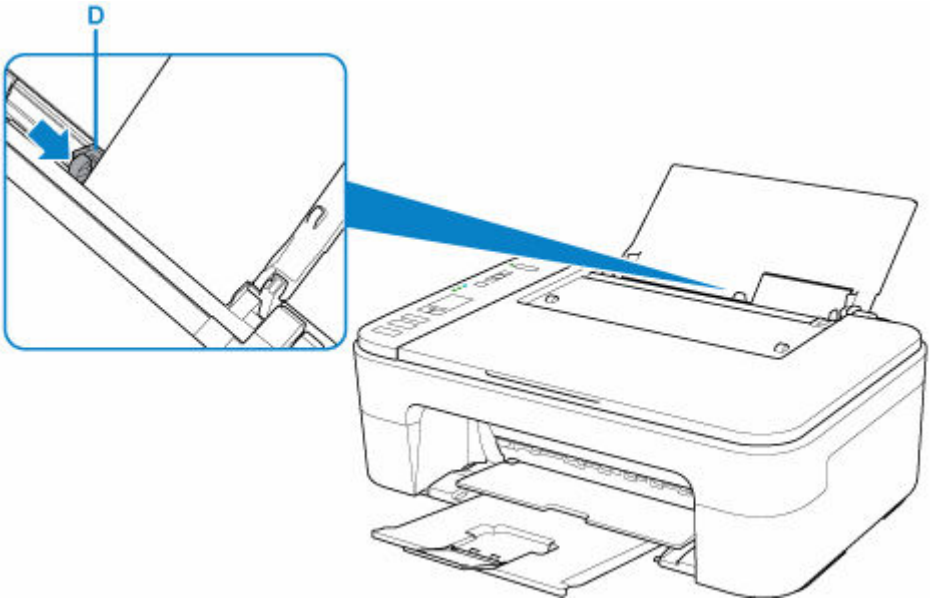

After loading paper on the rear tray, the Paper status and the current paper size flash on the LCD.

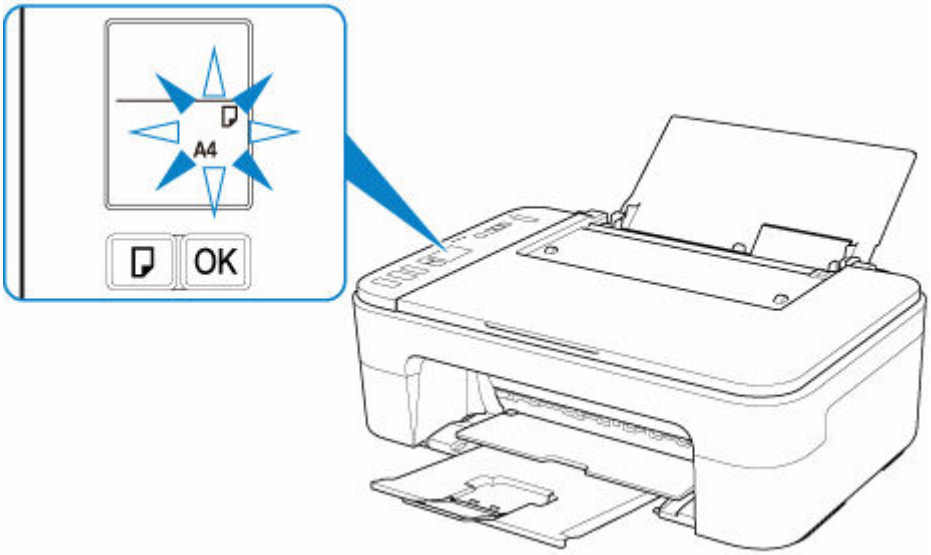

5. Press **Paper Select** button (E) to select a paper size according to the paper loaded on the rear tray and press **OK** button (F).

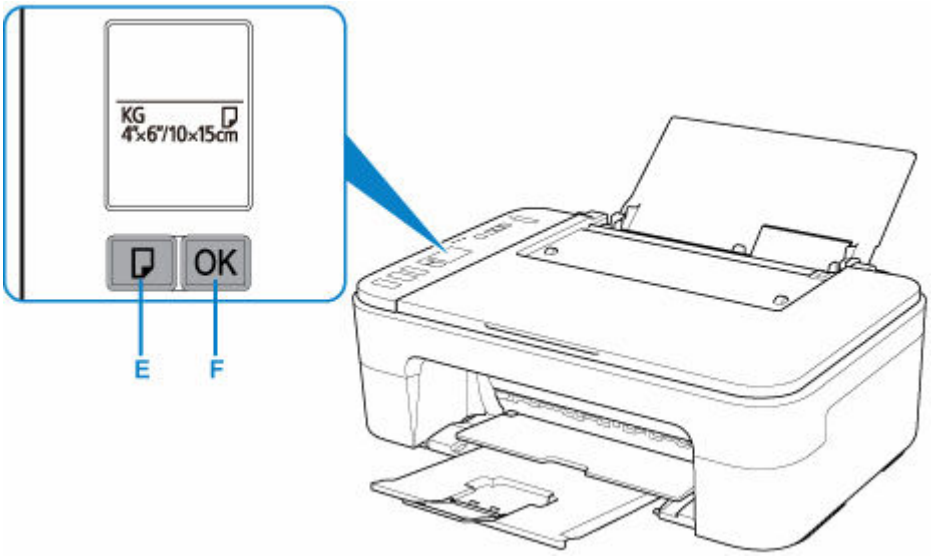

6. Start (Canon PRINT Inkjet/SELPHY) from your smartphone/tablet.

7. Select **Photo Print** on Canon PRINT Inkjet/SELPHY.

   The list of photos saved on your smartphone/tablet is displayed.

8. Select a photo.

   You can also select multiple photos at once.

9. Specify the number of copies, paper size, etc.

10. Start printing.

Copying

This section describes how to load originals and copy them to plain paper.

1. Open the paper support (A).

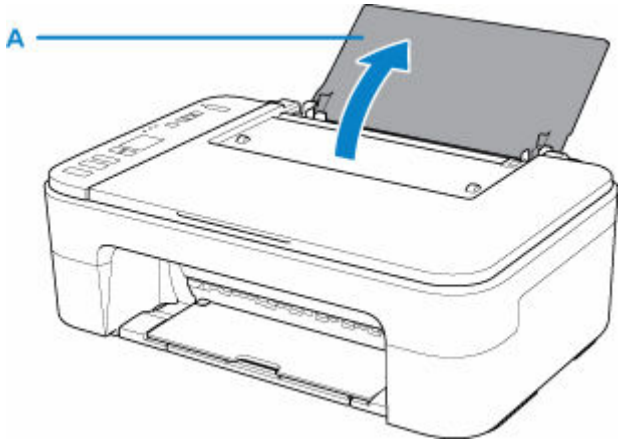

2. Pull out the paper output tray (B) and the output tray extension (C).

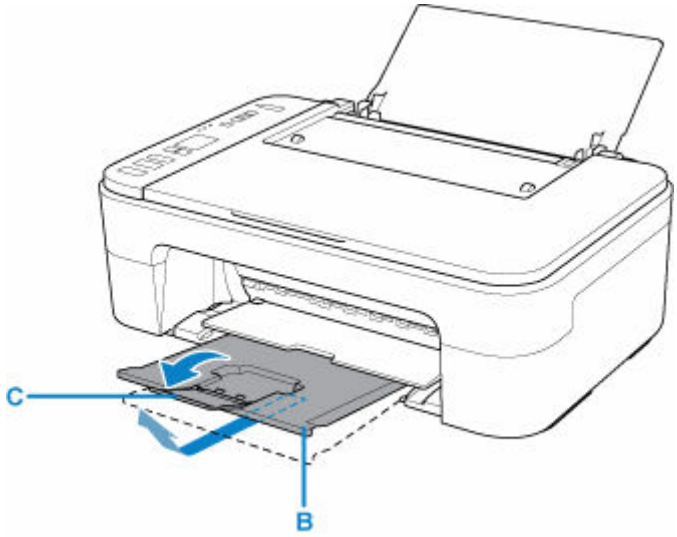

3. Load paper vertically against the far right of the rear tray WITH THE PRINT SIDE FACING YOU.

4. Adjust the paper guide (D) with the paper left side.

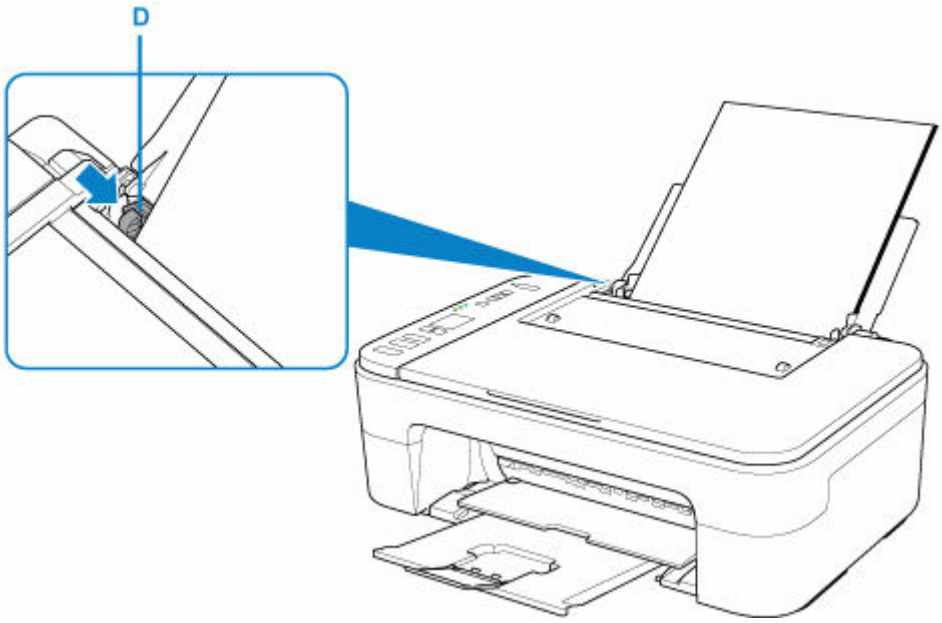

After loading paper on the rear tray, the Paper status and the current paper size flash on the LCD.

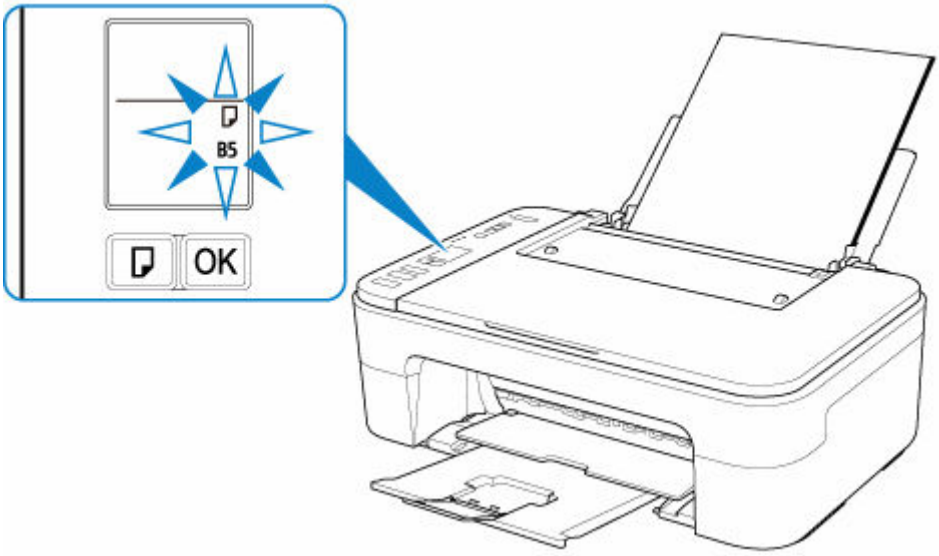

5. Press **Paper Select** button (E) to select a paper size according to the paper loaded on the rear tray and press **OK** button (F).

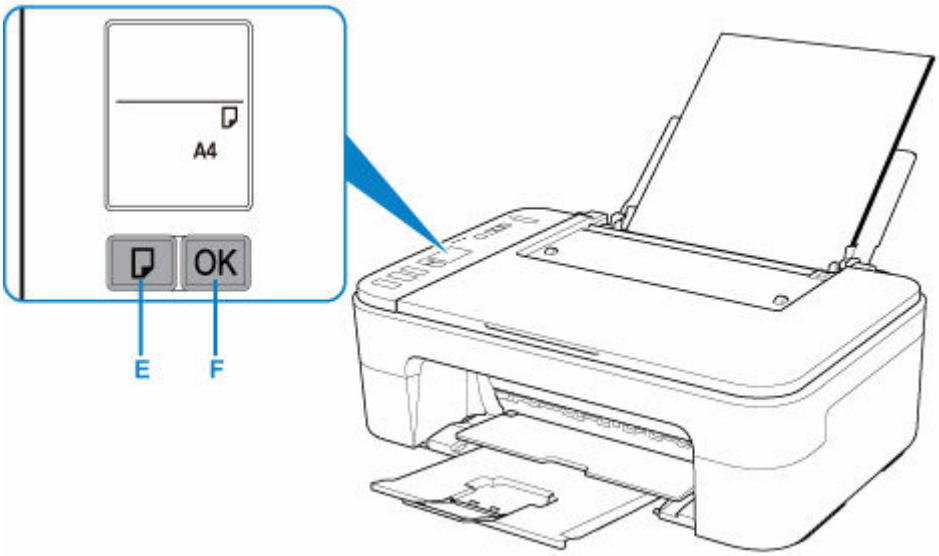

6. Open the document cover (G).

7. Load the original WITH THE SIDE TO COPY FACING DOWN and align it with the alignment mark (H).

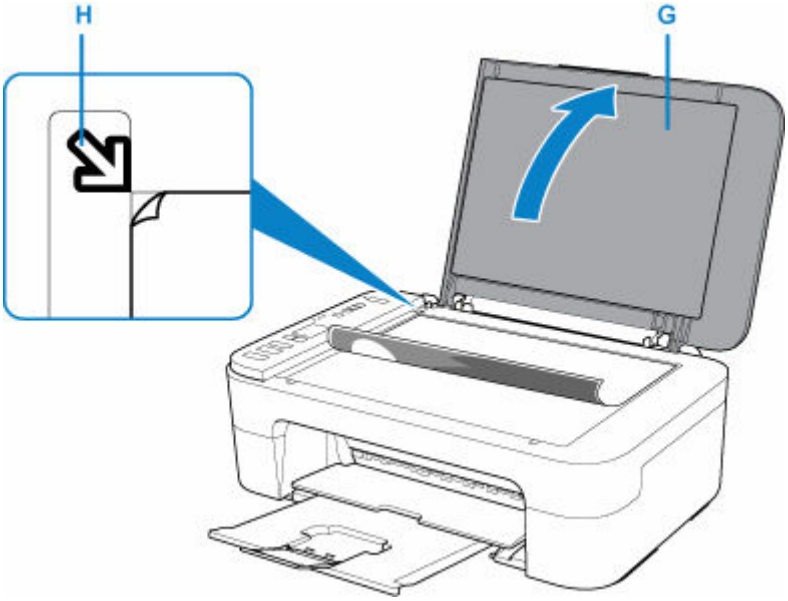

8. Close the document cover.

9. Press the **Black** button (I) or **Color** button (J).

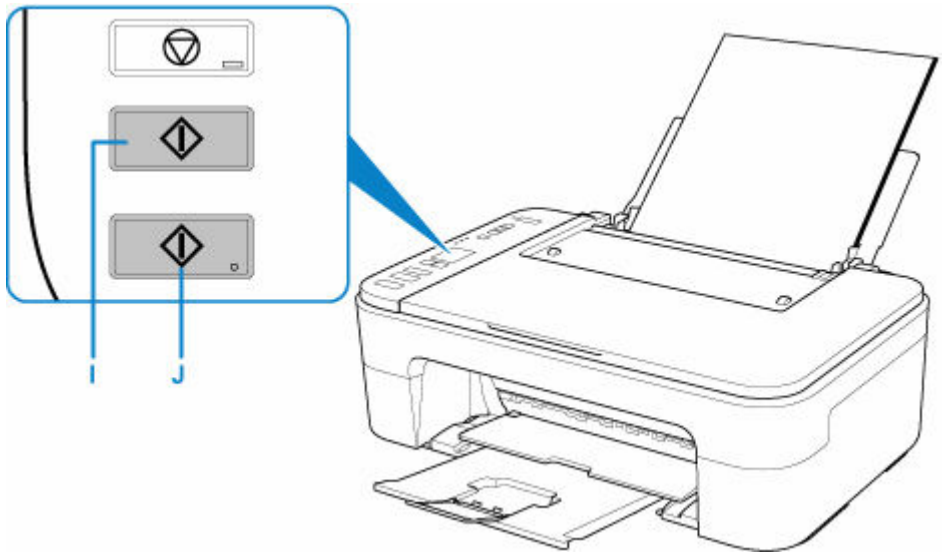

Important

- Do not open the document cover until copying is complete.

Note

- Your printer is equipped with many other convenient copy features.

  ➡ Copying

Network

Available Connection Methods

The following connection methods are available on the printer.

- **Wireless Connection**

  Connect the printer and devices (e.g. computer/smartphone/tablet) using a wireless router.

  If you have a wireless router, we recommend you use one for wireless connection.

  - Connection methods vary depending on the wireless router type.
  - You can change network settings such as the network name (SSID) and security protocol on the printer.
  - When the connection between a device and a wireless router is completed and (Wi-Fi icon) is displayed in the device's screen, you can connect the device to the printer using the wireless router.

- **Wireless Direct**

  Connect the printer and devices (e.g. computer/smartphone/tablet) without using a wireless router.

  - While you are using the printer with Wireless Direct, Internet connection from the printer becomes unavailable. In that case, web services for the printer cannot be used.
  - If you connect a device connected to the Internet via a wireless router to the printer that is in the Wireless Direct, the connection between the device and wireless router will be disabled. In that case, the connection of the device may switch to a mobile data connection automatically depending on your device. Transmission fees for connecting to the Internet using a mobile data connection apply.
  - In the Wireless Direct, you can connect up to five devices at the same time. If you try to connect a sixth device while five devices are already connected, an error will appear. If an error appears, disconnect a device you do not use and configure settings again.
  - Network settings such as the network name (SSID) and security protocol are specified automatically.

Network Connection Settings/Setup

Perform connection setup for the printer and computer/smartphone/tablet.

For more on setup procedure, click here.

Changing Network Settings

See below for changing connection settings for the printer and computer/smartphone/tablet.

- To change network connection method:
  - ➡ Reconfiguration Method of Wi-Fi Connection
  - ➡ Changing the Connection Mode

- To add computer/smartphone/tablet to the printer:
  - ➡ Connects to Another Computer via LAN/Changes from USB to LAN Connection
- To use Wireless Direct temporarily:
  - ➡ Printing/Scanning with Wireless Direct

IJ Network Device Setup Utility

IJ Network Device Setup Utility checks or diagnoses the settings of the printer and those of computer and restores the status of them if anything is wrong with network connection. Select either link below to download IJ Network Device Setup Utility.

➡ Checking Printer Connection Status Using IJ Network Device Setup Utility

- Performing/Changing Network Settings (Windows)

  For Windows, you can perform network settings using IJ Network Device Setup Utility.

  - ➡ IJ Network Device Setup Utility (Windows)
- Diagnosing and Repairing Network Settings (Windows/macOS)

  You can diagnose or repair network settings using IJ Network Device Setup Utility.

  - **For Windows:**
    - ➡ IJ Network Device Setup Utility (Windows)
  - **For macOS:**
    - ➡ IJ Network Device Setup Utility (macOS)

Network Connection Tips

See below for tips on using the printer via network connection.

➡ Network Connection Tips
➡ Handling Printer Configuration using the Web Browser
➡ Countermeasures against Unauthorized Access

Troubleshooting

See Network Settings and Common Problems for troubleshooting on network connection.

Notice/Restriction

See below for details.

- Restrictions on network settings:
  - ➡ Restrictions
- Notices when printing using web service:
  - ➡ Notice for Web Service Printing

Restrictions

When connecting another device while a device (such as a computer) is already connected to the printer, connect it using the same connection method as the connected device.
If you connect using a different connection method, the connection to the device in use will be disabled.

Connect via wireless router

- Make sure your device and the wireless router are connected. For details on checking these settings, see the manual supplied with the wireless router or contact its manufacturer.
  As for a device already connected to the printer without using a wireless router, reconnect it via a wireless router.
- Configuration, router functions, setup procedures and security settings of wireless routers vary depending on the system environment. For details, see the manual for your wireless router or contact its manufacturer.
- This printer does not support IEEE802.11ac, IEEE802.11a, or IEEE802.11n (5 GHz). Check if your device supports IEEE802.11n (2.4 GHz), IEEE802.11g or IEEE802.11b.
- If your device is set to the "IEEE802.11n only" mode, WEP or TKIP cannot be used as a security protocol. Change the security protocol for your device to something other than WEP and TKIP or change the setting to something other than "IEEE802.11n only."
  The connection between your device and the wireless router will be temporarily disabled while the setting is changed. Do not proceed to the next screen of this guide until setup is complete.
- For office use, consult your network administrator.
- Note that if you connect to a network with no security protection, your personal information could be disclosed to a third party.

Wireless Direct (Access Point Mode)

Important

- If a device is connected to the Internet via a wireless router, and you then connect it to a printer in Wireless Direct mode, the existing connection between the device and wireless router will be disabled. In that case, the connection of the device may switch to a mobile data connection automatically depending on your device. When you connect to the Internet using a mobile data connection, charges may apply depending on your contract.
  - When you connect a device and the printer using Wireless Direct, the connection information will be saved to Wi-Fi settings. The device may be connected to the printer automatically even after disconnecting it or connecting it to another wireless router.
  - To prevent automatic connection to the printer in Wireless Direct mode, change the connection mode after using the printer, or set not to connect automatically in the Wi-Fi settings of the device.
    For details on changing the settings of your device, see the manual supplied with the device or contact its manufacturer.

- If you connect a device and the printer using Wireless Direct, Internet connection may become unavailable depending on your environment. In that case, web services for the printer cannot be used.

- In Wireless Direct mode, you can connect up to five devices at the same time. If you try to connect a sixth device while five devices are already connected, an error will appear.
  If an error appears, disconnect a device that does not use the printer, then configure settings again.
- Devices connected to the printer using Wireless Direct cannot communicate with each other.
- Firmware updates for the printer are not available while using Wireless Direct.
- When a device has been connected to the printer without using a wireless router and you want to set it up again using the same connection method, disconnect it first. Disable the connection between the device and printer in the Wi-Fi setting screen.

Network Connection Tips

- Default Network Settings
- Detect Same Printer Name
- Connects to Another Computer via LAN/Changes from USB to LAN Connection
- Printing Network Settings
- Reconfiguration Method of Wi-Fi Connection

Default Network Settings

LAN Connection Defaults

Item	Default
Change LAN	Disable LAN
SSID	BJNPSETUP
Wireless LAN security	Disable
IP address (IPv4)	Auto setup
IP address (IPv6)	Auto setup
Set printer name*	XXXXXXXXXXXX
Enable/disable IPv6	Enable
Enable/disable WSD	Enable
Timeout setting	15 minutes
Enable/disable Bonjour	Enable
Service name	Canon TS3300 series
LPR protocol setting	Enable
RAW protocol	Enable
LLMNR	Enable
PictBridge communication	Enable

("XX" represents alphanumeric characters.)

* Default value depends on printer.

Wireless Direct Defaults

Item	Default
SSID (Identifier for Wireless Direct)	XXXXXX-TS3300series *
Password	Printer serial number
Wireless LAN security	WPA2-PSK (AES)

*(XXXXXX is the last six digits of MAC address of the printer.)

Detect Same Printer Name

When the printer is detected during setup, plural printers with the same name may appear on the results screen.

Select a printer with checking the printer settings against those on detection result screen.

- **For Windows:**

  Check the printer's MAC address or serial to select the correct printer from the results.

- **For macOS:**

  The printer names appear with the MAC address added at the end or as the printer name specified by Bonjour.

  Check identifiers such as the MAC address, the printer name specified by Bonjour, and the printer's serial number to select the printer from among those that appear.

Note

- Serial number may not appear on result screen.

To check the printer's MAC address and the serial number, print out the network settings information.

➡ Printing Network Settings

Connects to Another Computer via LAN/Changes from USB to LAN Connection

To connect an additional computer to the printer via LAN, or to change from USB to LAN connection, click here and perform setup.

Printing Network Settings

Use the operation panel to print the printer's current network settings.

Important

- The network settings printout contains important information about your network. Handle it with care.

1. Check that printer is turned on.

2. Load two sheets of A4 or Letter-sized plain paper.

3. Press **Information** button.

   The printer starts printing the network setting information.

The following information on the printer's network setting is printed out.

(Some setting values are not displayed depending on the printer settings.)

Item Number	Item	Description	Setting
1	Product Information	Product information	–
1-1	Product Name	Product name	XXXXXXXX
1-2	ROM Version	ROM version	XXXXXXXX
1-3	Serial Number	Serial number	XXXXXXXX
2	Network Diagnostics	Network diagnostics	–
2-1	Diagnostic Result	Diagnostic result	XXXXXXXX
2-2	Result Codes	Result codes	XXXXXXXX
2-3	Result Code Details	Result code details	http://canon.com/ijnwt
3	Wireless LAN	Wireless LAN	Enable/Disable
3-1	WPS PIN CODE	WPS PIN code	XXXXXXXX
3-2	Infrastructure	Infrastructure	Enable/Disable
3-2-1	Signal Strength	Signal strength	0 to 100 [%]
3-2-2	Link Quality	Link quality	0 to 100 [%]
3-2-3	Frequency	Frequency	XX (GHz)
3-2-4	MAC Address	MAC address	XX:XX:XX:XX:XX:XX
3-2-5	Connection	Connection status	Active/Inactive
3-2-6	SSID	SSID	Wireless LAN network name (SSID)

3-2-7	Channel	Channel	XX (1 to 13)
3-2-8	Encryption	Encryption method	None/WEP/TKIP/AES
3-2-9	WEP Key Length	WEP key length (bits)	Inactive/128/64
3-2-10	Authentication	Authentication method	None/auto/open/shared/WPA-PSK/WPA2-PSK
3-2-11	TCP/IPv4	TCP/IPv4	Enable
3-2-12	IP Address	IP address	XXX.XXX.XXX.XXX
3-2-13	Subnet Mask	Subnet mask	XXX.XXX.XXX.XXX
3-2-14	Default Gateway	Default gateway	XXX.XXX.XXX.XXX
3-2-15	TCP/IPv6	TCP/IPv6	Enable/Disable
3-2-16	Link Local Address	Link local address	XXXX:XXXX:XXXX:XXXX XXXX:XXXX:XXXX:XXXX
3-2-17	Link Local Prefix Length	Link local prefix length	XXX
3-2-18	Stateless Address1	Stateless address 1	XXXX:XXXX:XXXX:XXXX XXXX:XXXX:XXXX:XXXX
3-2-19	Stateless Prefix Length1	Stateless prefix length 1	XXX
3-2-20	Stateless Address2	Stateless address 2	XXXX:XXXX:XXXX:XXXX XXXX:XXXX:XXXX:XXXX
3-2-21	Stateless Prefix Length2	Stateless prefix length 2	XXX
3-2-22	Stateless Address3	Stateless address 3	XXXX:XXXX:XXXX:XXXX XXXX:XXXX:XXXX:XXXX
3-2-23	Stateless Prefix Length3	Stateless prefix length 3	XXX
3-2-24	Stateless Address4	Stateless address 4	XXXX:XXXX:XXXX:XXXX XXXX:XXXX:XXXX:XXXX
3-2-25	Stateless Prefix Length4	Stateless prefix length 4	XXX
3-2-26	Default Gateway1	Default gateway 1	XXXX:XXXX:XXXX:XXXX XXXX:XXXX:XXXX:XXXX
3-2-27	Default Gateway2	Default gateway 2	XXXX:XXXX:XXXX:XXXX XXXX:XXXX:XXXX:XXXX

3-2-28	Default Gateway3	Default gateway 3	XXXX:XXXX:XXXX:XXXX XXXX:XXXX:XXXX:XXXX
3-2-29	Default Gateway4	Default gateway 4	XXXX:XXXX:XXXX:XXXX XXXX:XXXX:XXXX:XXXX
3-2-33	IPsec	IPsec setting	Active
3-2-34	Security Protocol	Security method	ESP/ESP & AH/AH
3-3	Access Point Mode	Operation mode for Wireless Direct	Enable/Disable
3-3-1	MAC Address	MAC address	XX:XX:XX:XX:XX:XX
3-3-2	Connection	Connection status	Active/Inactive
3-3-3	SSID	SSID	Wireless Direct network name (SSID)
3-3-4	Password	Password	Wireless Direct password (10 alphanumeric characters)
3-3-5	Channel	Channel	3
3-3-6	Encryption	Encryption method	AES
3-3-7	Authentication	Authentication method	WPA2-PSK
3-3-8	TCP/IPv4	TCP/IPv4	Enable
3-3-9	IP Address	IP address	XXX.XXX.XXX.XXX
3-3-10	Subnet Mask	Subnet mask	XXX.XXX.XXX.XXX
3-3-11	Default Gateway	Default gateway	XXX.XXX.XXX.XXX
3-3-12	TCP/IPv6	TCP/IPv6	Enable/Disable
3-3-13	Link Local Address	Link local address	XXXX:XXXX:XXXX:XXXX XXXX:XXXX:XXXX:XXXX
3-3-14	Link Local Prefix Length	Link local prefix length	XXX
3-3-15	IPsec	IPsec setting	Active
3-3-16	Security Protocol	Security method	–
5	Other Settings	Other settings	–
5-1	Printer Name	Printer name	Printer name (Up to 15 alphanumeric characters)
5-4	WSD Printing	WSD printing setting	Enable/Disable
5-5	WSD Timeout	Timeout	1/5/10/15/20 [min]
5-6	LPD Printing	LPD printing setting	Enable/Disable

5-7	RAW Printing	RAW printing setting	Enable/Disable
5-9	Bonjour	Bonjour setting	Enable/Disable
5-10	Bonjour Service Name	Bonjour service name	Bonjour service name (Up to 52 alphanumeric characters)
5-11	LLMNR	LLMNR setting	Enable/Disable
5-12	SNMP	SNMP setting	Enable/Disable
5-13	PictBridge Commun.	PictBridge Communication	Enable/Disable
5-14	DNS Server	Obtain DNS server address automatically	Auto/Manual
5-15	Primary Server	Primary server address	XXX.XXX.XXX.XXX
5-16	Secondary Server	Secondary server address	XXX.XXX.XXX.XXX
5-17	Proxy Server	Proxy server setting	Enable/Disable
5-18	Proxy Address	Proxy address	XXXXXXXXXXXXXXXXXXXX
5-19	Proxy Port	Proxy port specification	1 to 65535
5-20	Cert. Fingerprt(SHA-1)	Certificate fingerprint(SHA-1)	xxxxxxxx xxxxxxxx xxxxxxxx xxxxxxxx xxxxxxxx
5-21	Cert. Fingerprt(SHA-256)	Certificate fingerprint(SHA-256)	xxxxxxxx xxxxxxxx xxxxxxxx xxxxxxxx xxxxxxxx xxxxxxxx xxxxxxxx xxxxxxxx

("XX" represents alphanumeric characters.)

Reconfiguration Method of Wi-Fi Connection

Follow either procedure below to change wireless LAN connection method (infrastructure or Wireless Direct).

- **For Windows:**
  - Click here and redo setup.
  - Perform settings on the **Network Settings** screen on IJ Network Device Setup Utility.

  Important

  - Before you perform settings using IJ Network Device Setup Utility, turn on Easy wireless connect mode on the printer following the procedure below.
    1. Make sure printer is turned on.
    2. Press **Direct** button and release it when (Direct) icon appears.

       Follow instructions on your smartphone or tablet.

- **For macOS:**

  Click here and redo setup.

IJ Network Device Setup Utility (macOS)

- IJ Network Device Setup Utility
- Starting Up IJ Network Device Setup Utility
- Diagnosing and Repairing Network Settings
- List of Models Which Does Not Support Diagnosis and Repair Function

IJ Network Device Setup Utility

If anything is wrong with connection, IJ Network Device Setup Utility diagnoses the settings of the printer and those of computer on which it is installed. In addition, IJ Network Device Setup Utility restores the status of the printer and computer.

Important

- To use the printer over LAN, make sure you have the equipment necessary for the connection type, such as a wireless router or a LAN cable.
- When you install IJ Network Device Setup Utility, disable block function of firewall.

Starting Up IJ Network Device Setup Utility

Start up **Launchpad**, select **Canon Utilities**, and then select IJ Network Device Setup Utility.

When you start up IJ Network Device Setup Utility, the screen below appears.

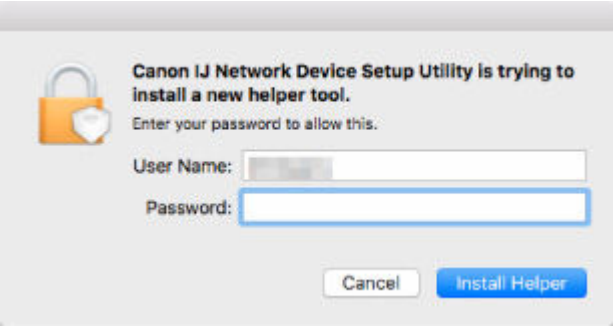

Enter the password specified for your computer and select **Install Helper**. IJ Network Device Setup Utility starts diagnosis and repair of network.

➡ Diagnosing and Repairing Network Settings

Diagnosing and Repairing Network Settings

IJ Network Device Setup Utility diagnoses and repairs computer settings or connection between the computer and printer when a problem (e.g. cannot print from a printer on the network) occurs.

Important

- Some models do not support diagnosis and repair function.

  For details:

  ➡ List of Models Which Does Not Support Diagnosis and Repair Function

IJ Network Device Setup Utility starts checking the computer settings when it starts up. Perform operations following the instructions on the screen.

Note

- This function checks the following items:
  - whether the computer is connected to the router
  - whether the printer can be detected on the network
  - whether the signal strength or communication level is sufficient (when using Wi-Fi)
  - whether the printer port setting matches with the network setting

List of Models Which Does Not Support Diagnosis and Repair Function

The following models does not support "Diagnose and Repair" function of IJ Network Device Setup Utility.

- G4000 series
- PRO-500 series
- PRO-1000 series
- MB2100 series
- MB2700 series
- MB5100 series
- MB5400 series
- iB4000 series
- PRO-520
- PRO-540
- PRO-560
- PRO-540S
- PRO-560S
- PRO-2000
- PRO-4000
- PRO-6000
- PRO-4000S
- PRO-6000S
- TS9000 series
- TS8000 series
- TS6000 series
- TS5000 series
- MG3000 series
- E470 series

Handling Paper, Originals, FINE Cartridges, etc.

- Loading Paper
- Loading Originals
- Replacing a FINE Cartridge

Loading Paper

- Loading Plain Paper / Photo Paper

Loading Plain Paper / Photo Paper

You can load plain paper or photo paper.

Important

- If you cut plain paper to a size of 5" x 7" (13 x 18 cm) or smaller to perform a trial print, it may cause a paper jam.

Note

- We recommend Canon genuine photo paper for printing photos. For details on the Canon genuine paper, see Supported Media Types.
- You can use general copy paper or Canon Red Label Superior WOP111/Canon Océ Office Colour Paper SAT213.

  For the page size and paper weight you can use for this printer, see Supported Media Types.

1. Prepare paper.

Align the edges of paper. If paper is curled, flatten it.

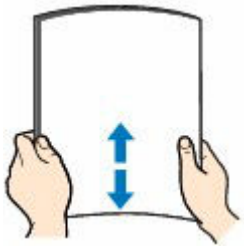

Note

- Align the edges of paper neatly before loading. Loading paper without aligning the edges may cause paper jams.
- If paper is curled, hold the curled corners and gently bend them in the opposite direction until the paper becomes completely flat.

  For details on how to flatten curled paper, see Check3 in Paper Is Smudged / Printed Surface Is Scratched.

2. Open the paper support (A).

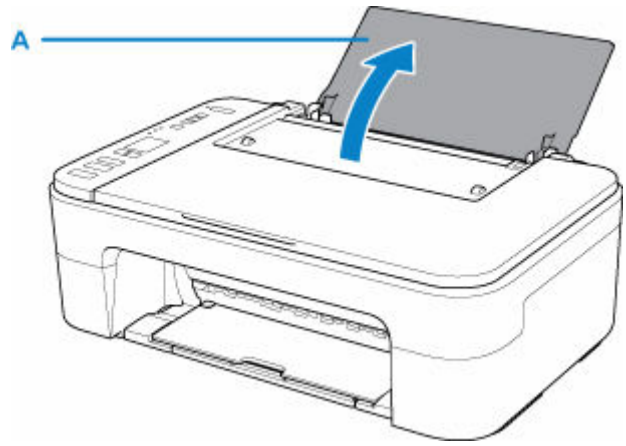

3. Pull out the paper output tray (B) and the output tray extension (C).

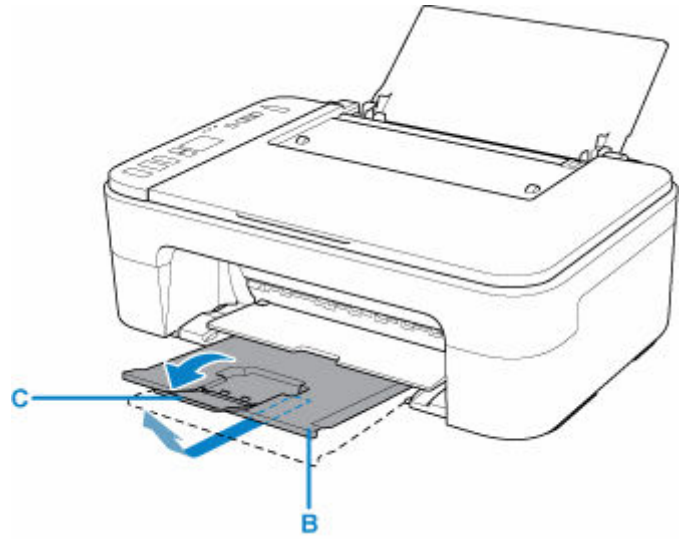

4. Load paper vertically against the far right of the rear tray WITH THE PRINT SIDE FACING YOU.

5. Adjust the paper guide (D) with the paper left side.

   Do not slide the paper guide too hard against the paper. The paper may not be fed properly.

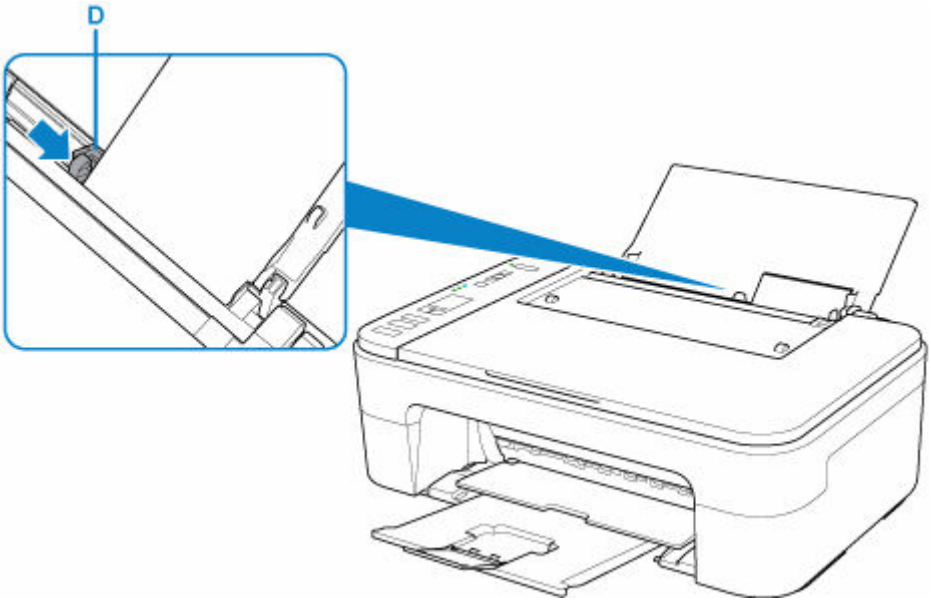

Important

- Always load paper in portrait orientation (E). Loading paper in landscape orientation (F) can cause paper jams.

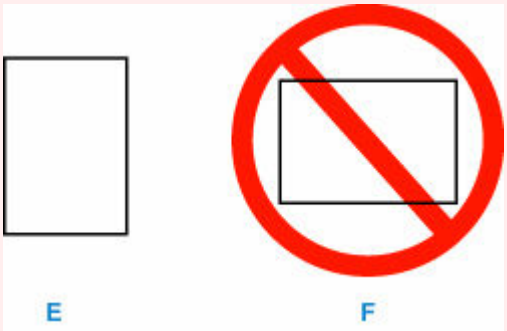

Note

- Do not load sheets of paper higher than the load limit mark (G).

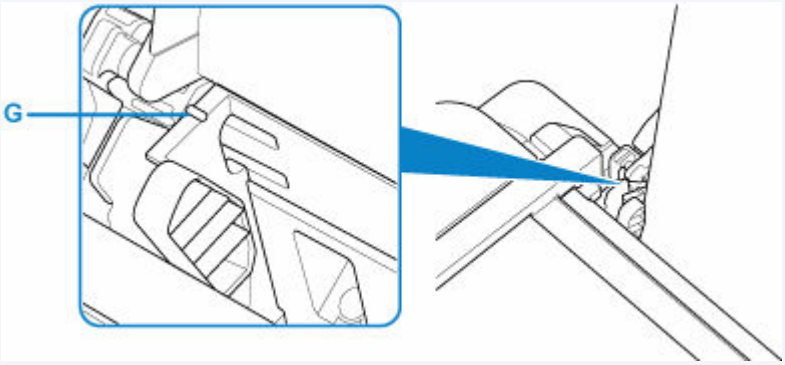

After loading paper on the rear tray, the Paper status and the current paper size flash on the LCD.

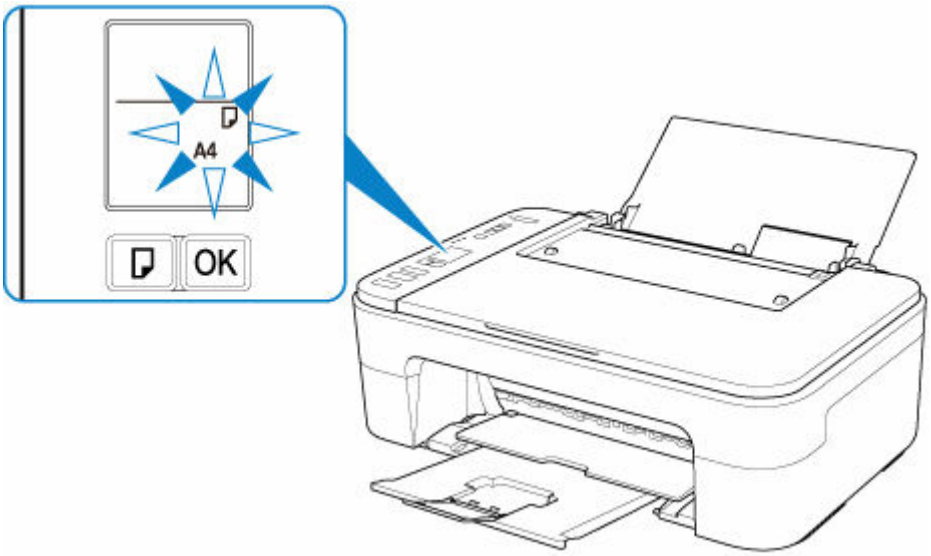

6. Press **Paper Select** button (H) to select a paper size according to the paper loaded on the rear tray and press **OK** button (I).

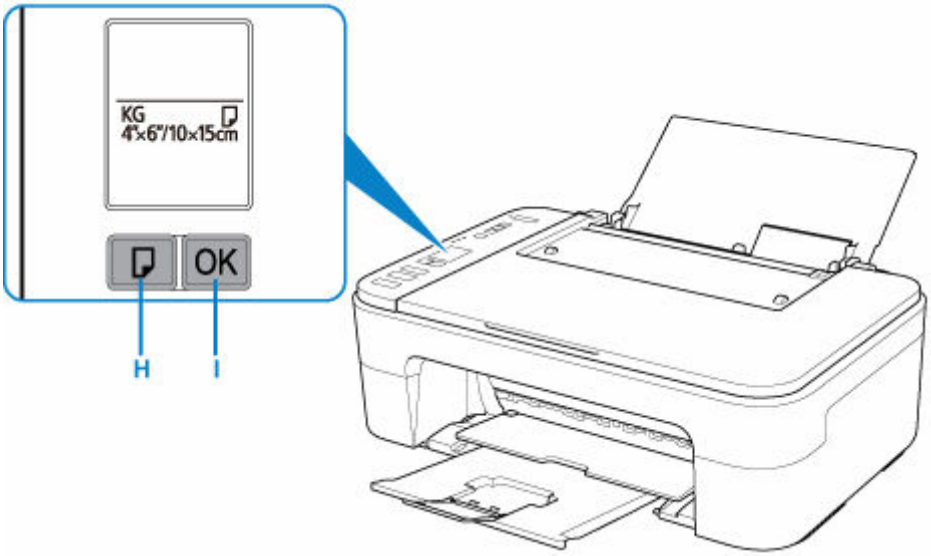

Note

- There are various types of paper, such as paper with a special surface coating for printing photos at optimal quality and paper suitable for documents. Each media type has specific preset settings (how ink is used and sprayed, distance from nozzles, etc.), that allow you to print to that type with optimal image quality. The wrong paper settings may cause poor printout color quality or scratches on the printed surface. If you notice blurring or uneven colors, increase the print quality setting and try printing again.
- To prevent incorrect printing, this printer has a function that detects whether the size set for the paper loaded on the rear tray matches the paper settings. Before printing, make paper settings in accordance with the rear tray paper size setting. When this function is enabled, an error code is displayed if these settings do not match to prevent incorrect printing. When the error code is displayed, check and correct the paper settings.

Loading Originals

- Loading Originals on Platen
- Supported Originals

Loading Originals on Platen

1. Open the document cover.

2. Load original WITH SIDE TO SCAN FACING DOWN on platen.

   Align the corner of the original with the alignment mark ⌧.

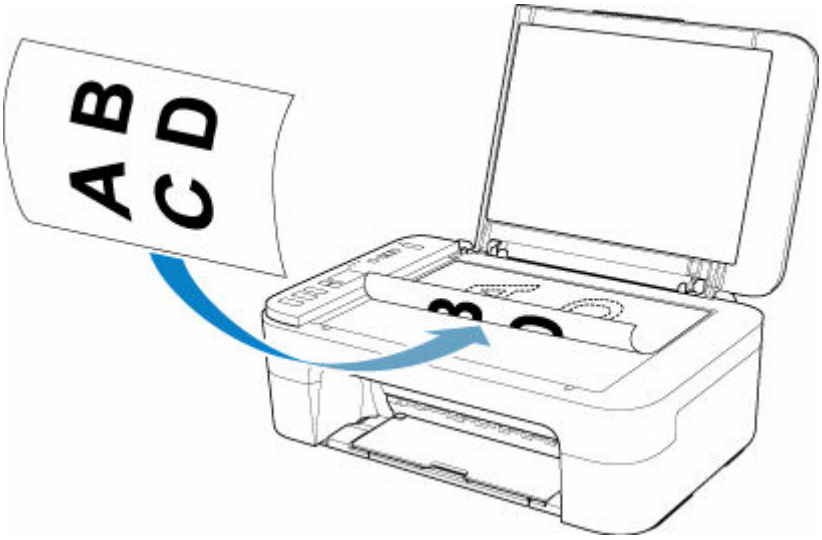

Important

- Be sure to observe the following when loading the original on the platen. Failure to observe the following may cause the scanner to malfunction or the platen glass to break.
  - Do not place any objects weighing 4.4 lb (2.0 kg) or more on the platen glass.
  - Do not put any pressure of 4.4 lb (2.0 kg) or more on the platen glass, such as pressing down the original.
- The printer cannot scan the striped area (A) (0.04 in. (1 mm) from the edges of the platen glass).

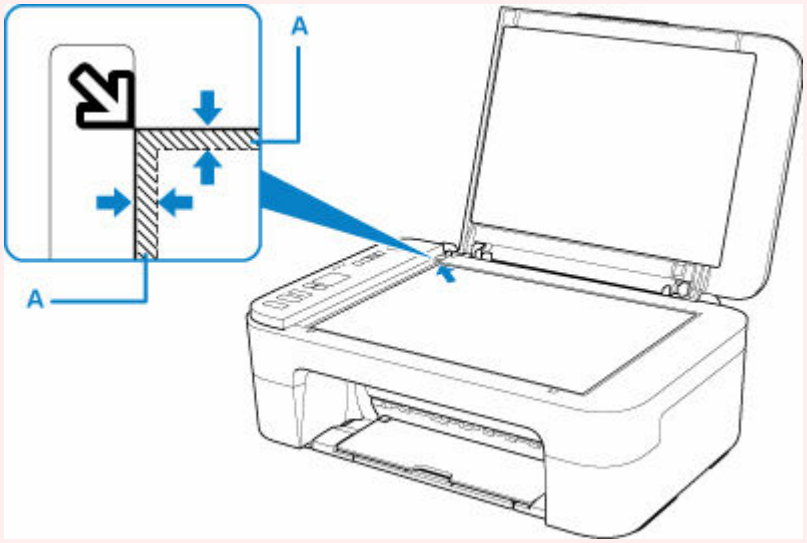

3. Close the document cover gently.

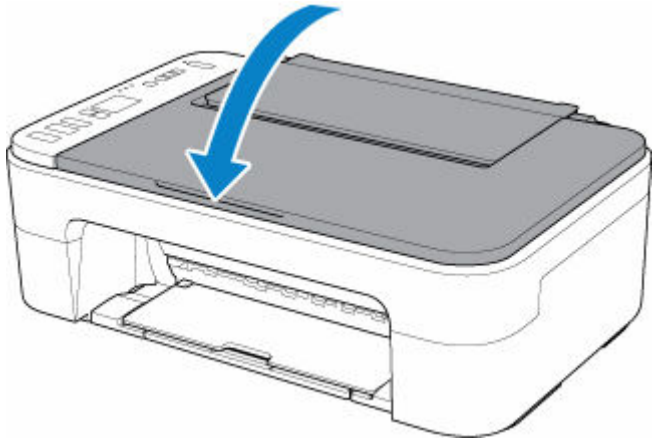

Important

- After loading the original on the platen, be sure to close the document cover before starting to copy or scan.

Supported Originals

Item	Details
Types of originals	• Text document, magazine, or newspaper • Printed photo, postcard, business card, or disc (BD/DVD/CD, etc.)
Size (width x height)	Max. 8.5 x 11.7 in. (216 x 297 mm)

Replacing a FINE Cartridge

- Replacing a FINE Cartridge
- Checking the Ink Status with the Ink Lamps on the Operation Panel
- Ink Tips

Replacing a FINE Cartridge

When remaining ink cautions or errors occur, the error code will appear on the LCD to inform you of the error. In this state, the printer cannot print or scan. Check the error code and take appropriate action.

➡ When Error Occurred

While using the printer, the periphery of the paper output slot may become dirty with ink.

Before replacing the FINE Cartridge, clean the periphery of the paper output slot.

Replacing Procedure

When you need to replace a FINE cartridge, follow the procedure below.

Important

- Do not touch the electrical contacts (A) or print head nozzle (B) on a FINE cartridge. The printer may not print properly if you touch them.

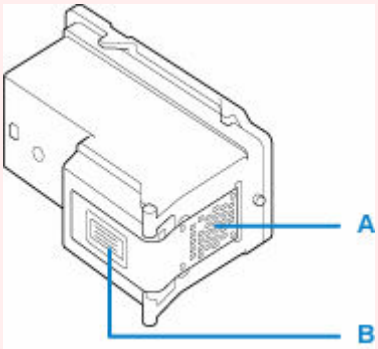

- If you remove a FINE cartridge, replace it immediately. Do not leave the printer with the FINE cartridge removed.
- Use a new FINE cartridge for replacement. Installing a used FINE cartridge may cause the nozzles to clog.

  Furthermore, with such a FINE cartridge, the printer will not be able to inform you when to replace the FINE cartridge properly.
- Once a FINE cartridge has been installed, do not remove it from the printer and leave it out in the open. This will cause the FINE cartridge to dry out, and the printer may not operate properly when it is reinstalled. To maintain optimal printing quality, use a FINE cartridge within six months of first use.

Note

- For Windows, if a FINE cartridge runs out of ink, you can print with either color or black FINE cartridge, in whichever ink remains, only for a while. However the print quality may be reduced compared to when printing with both cartridges. We recommend to use a new FINE cartridge in order to obtain optimum qualities.

  Even when printing with one ink only, print with leaving the empty FINE cartridge installed. If either of the color FINE cartridge or black FINE cartridge is not installed, an error occurs and the printer cannot print.

  For information on how to configure this setting, see below.

➡ Setting the Ink to be Used

- Color ink may be consumed even when printing a black-and-white document or when black-and-white printing is specified.

  Both color ink and black ink are also consumed in the standard cleaning and deep cleaning of the print head, which may be necessary to maintain the performance of the printer. When ink runs out, replace the FINE cartridge immediately with a new one.

  ➡ Ink Tips

1. Check that printer is turned on.

2. Retract the paper output tray and the output tray extension.

3. Open the cover.

   The FINE cartridge holder moves to the replacement position.

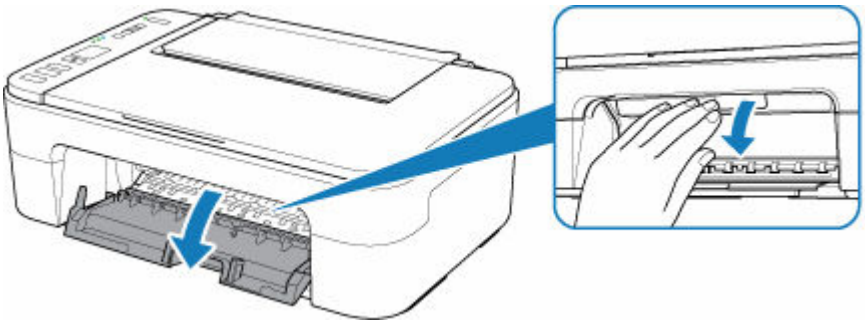

⚠ Caution

- Do not hold the FINE cartridge holder to stop or move it forcibly. Do not touch the FINE cartridge holder until it stops completely.

Important

- The inside of the printer may be stained with ink. Be careful not to stain your hands or clothing when replacing the FINE cartridge. You can easily wipe off the ink from the inside of the printer with tissue paper or the like.
- Do not touch the metallic parts or other parts inside the printer.
- If the cover is left open for more than 10 minutes, the FINE cartridge holder moves to the far left and an error occurs. In this case, close the cover, then open it again.

4. Remove the empty FINE cartridge.

   1. Push down the FINE cartridge until it clicks.

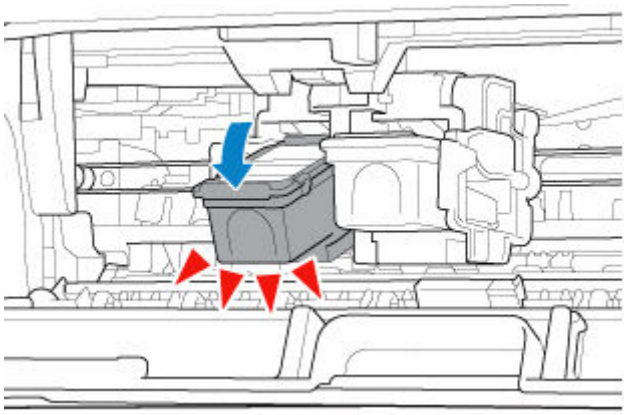

2. Remove the FINE cartridge.

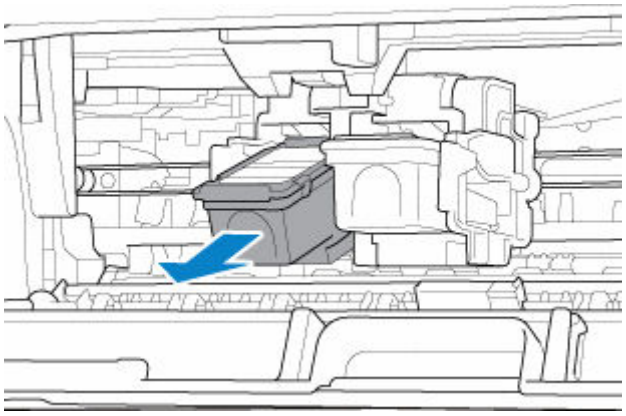

Important

- Handle the FINE cartridge carefully to avoid staining of clothing or the surrounding area.
- Discard the empty FINE cartridge according to the local laws and regulations regarding disposal of consumables.

5. Prepare a new FINE cartridge.

   1. Take a new FINE cartridge out of its package and remove the protective tape (C) gently.

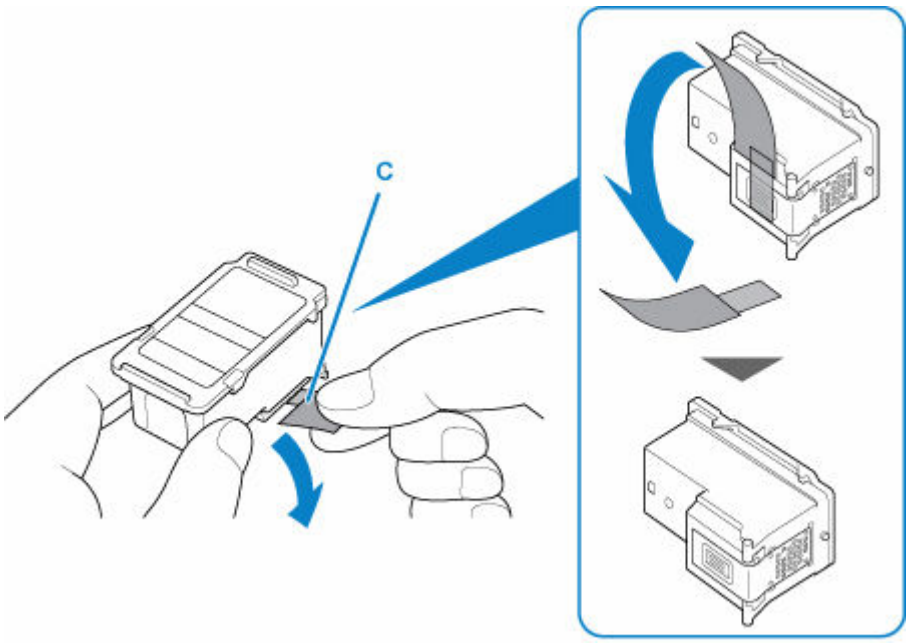

Important

- If you shake a FINE cartridge, ink may spill out and stain your hands and the surrounding area. Handle a FINE cartridge carefully.
- Be careful not to stain your hands and the surrounding area with ink on the removed protective tape.
- Do not reattach the protective tape once you have removed it. Discard it according to the local laws and regulations regarding disposal of consumables.
- Do not touch the electrical contacts or print head nozzle on a FINE cartridge. The printer may not print properly if you touch them.

6. Install the FINE cartridge.

1. Insert the new FINE cartridge at a slant into the FINE cartridge holder.

The color FINE cartridge should be installed into the left slot and the black FINE cartridge should be installed into the right slot.

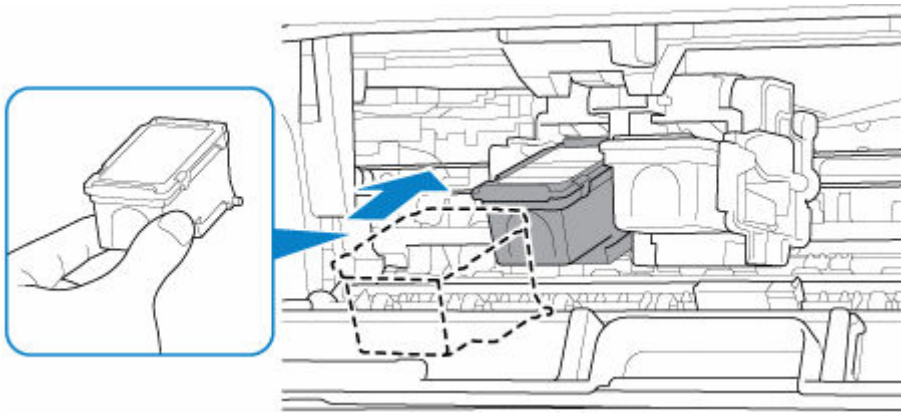

Important

- Insert the FINE cartridge gently so that it does not hit the electrical contacts on the FINE cartridge holder.

2. Push the FINE cartridge in and up firmly until it snaps into place.

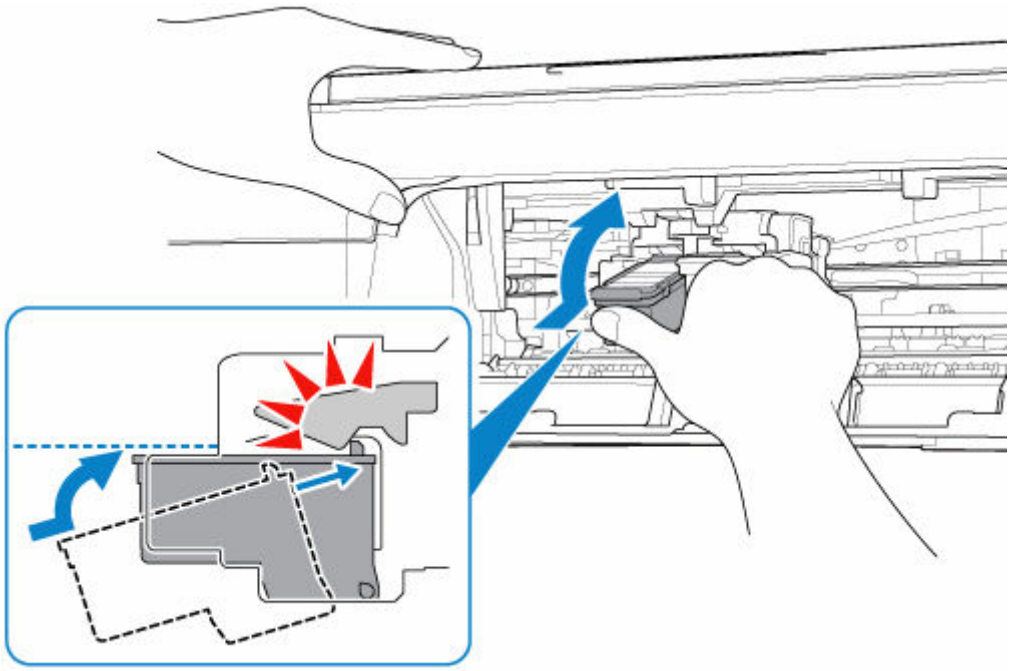

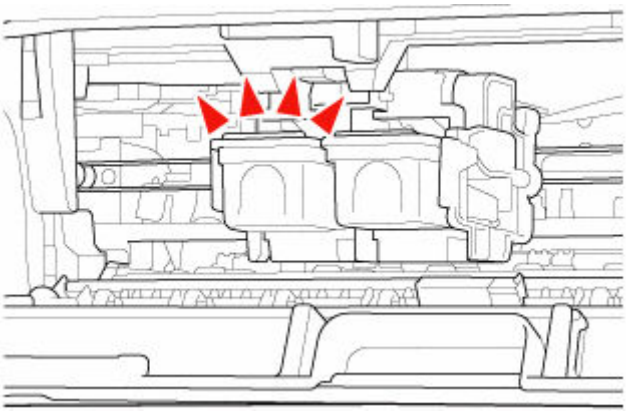

Important

- Check if the FINE cartridge is installed correctly.

- The printer cannot print unless both the color FINE cartridge and black FINE cartridge are installed. Be sure to install both cartridges.

7. Close the cover.

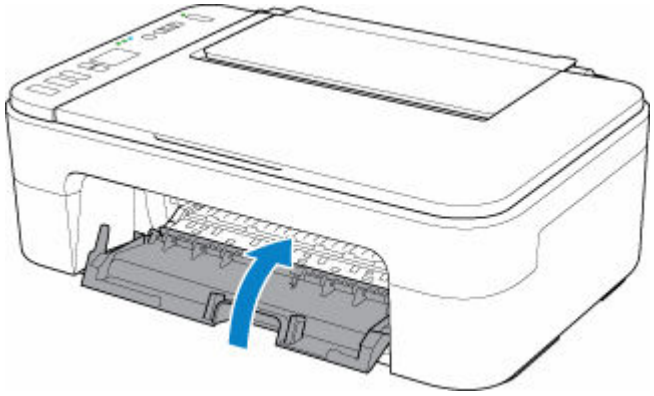

Note

- If the error code appears on the LCD after the cover is closed, take appropriate action.

  ➡ When Error Occurred

- The printer may make noise during operation.

8. Adjust the print head position.

After replacing the FINE cartridge, align the print head.

Note

- When print head alignment is performed, the printer starts cleaning the print head automatically before printing the print head alignment sheet. Do not perform any other operations until the printer completes the cleaning of the print head.

Checking the Ink Status with the Ink Lamps on the Operation Panel

Note

- The ink level detector is mounted on the printer to detect the remaining ink level. The printer considers as ink is full when a new FINE cartridge is installed, and then starts to detect a remaining ink level. If you install a used FINE cartridge, the indicated ink level of it may not be correct. In such case, refer to the ink level information only as a guide.
- When remaining ink cautions or errors occur, the ink lamps and the **Alarm** lamp will flash to inform you of the error. Also the error code is displayed on the LCD. Check the error code and take appropriate action.

  ➡ When Error Occurred

In the copy standby mode, you can check the ink status with the **Color Ink** lamp and **Black Ink** lamp.

* All the lamps on the operation panel are shown lit in the figure below for explanatory purposes.

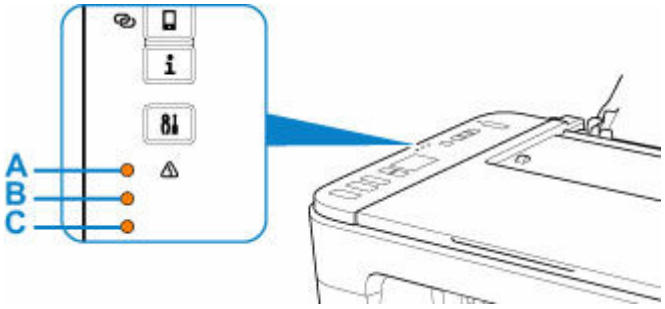

A: **Alarm** lamp
B: **Black Ink** lamp
C: **Color Ink** lamp

Color Ink lamp or Black Ink lamp lights

The ink is running low. Prepare a new ink cartridge. The resulting print quality may not be satisfactory, if printing is continued under this condition.

Color Ink lamp or Black Ink lamp flashes, while Alarm lamp flashes

An error has occurred.

➡ When Error Occurred

* For some types of errors, the **Alarm** lamp may not flash.

Note

- You can also check the ink status on the computer screen.
  - For Windows:

    ➡ Checking Ink Status from Your Computer
  - For macOS:

➡ Checking Ink Status from Your Computer

Ink Tips

How is ink used for various purposes other than printing?

Ink may be used for purposes other than printing. Ink is not only used for printing, but also for cleaning the print head to maintain the optimal printing quality.

The printer has the function to automatically clean the ink jet nozzles to prevent clogging. In the cleaning procedure, used ink for nozzle cleaning is limited to a small amount.

Does black-and-white printing use color ink?

Black-and-white printing may use ink other than black ink depending on the type of printing paper or the settings of the printer driver. So, color ink is consumed even when printing in black-and-white.

If Printing Is Faint or Uneven

- Maintenance Procedure
- Printing the Nozzle Check Pattern
- Examining the Nozzle Check Pattern
- Cleaning the Print Head
- Deep Print Head Cleaning
- Aligning the Print Head

Maintenance Procedure

If print results are blurred, colors are not printed correctly, or print results are unsatisfactory (e.g. misaligned printed ruled lines), perform the maintenance procedure below.

Important

- Do not rinse or wipe the FINE cartridge. This can cause trouble with the FINE cartridge.

Note

- Check if ink remains in the FINE cartridge.

  ➡ Checking the Ink Status with the Ink Lamps on the Operation Panel

- Check if the FINE cartridge is installed correctly.

  ➡ Replacing Procedure

  Also check if the protective tape on the bottom of the FINE cartridge is removed.

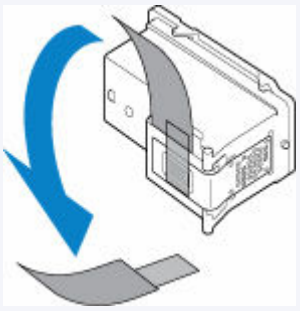

- If the **Alarm** lamp lights or flashes, see When Error Occurred.
- For Windows, increasing the print quality in the printer driver settings may improve the print result.

  ➡ Changing the Print Quality and Correcting Image Data

When the Print Results Are Blurred or Uneven:

Step1 Print the nozzle check pattern.

From the printer

➡ Printing the Nozzle Check Pattern

From the computer

- For Windows:

  ➡ Printing a Nozzle Check Pattern

- For macOS:

  ➡ Printing a Nozzle Check Pattern

Step2 Examine the nozzle check pattern.

If there are missing lines or horizontal white streaks in the pattern:

Step3 Clean the print head.

From the printer

➡ Cleaning the Print Head

From the computer

- For Windows:
  - ➡ Cleaning the Print Heads
- For macOS:
  - ➡ Cleaning the Print Heads

After cleaning the print head, print and examine the nozzle check pattern: ➡ Step1

If the problem is not resolved after performing from step 1 to step 3 twice:

Step4 Clean the print head deeply.

From the printer

➡ Deep Print Head Cleaning

From the computer

- For Windows:
  - ➡ Cleaning the Print Heads
- For macOS:
  - ➡ Cleaning the Print Heads

If the problem is not resolved, turn off the power and clean the print head deeply again after 24 hours.

If the problem is still not resolved:

Step5 Replace the FINE cartridge.

➡ Replacing a FINE Cartridge

Note

- If the problem is still not resolved after replacing the FINE cartridge, contact your nearest Canon service center to request a repair.

When the Print Results Are Not Even such as the Ruled Lines Are Misaligned:

Step Align the print head.

From the printer

➡ Aligning the Print Head

From the computer

- For Windows:

  ➡ Adjusting Print Head Position Manually

- For macOS:

  ➡ Adjusting Print Head Position

Printing the Nozzle Check Pattern

Print the nozzle check pattern to determine whether the ink ejects properly from the print head nozzle.

Note

- If the remaining ink level is low, the nozzle check pattern will not be printed correctly. Replace the FINE Cartridge whose ink is low.

You need to prepare: a sheet of A4 or Letter-sized plain paper

1. Check that printer is turned on.

2. Load a sheet of A4 or Letter-sized plain paper in the rear tray.

   ➡ Loading Plain Paper / Photo Paper

3. Press the **Setup** button until **1** appears on the LCD.

4. Press the **Black** button or the **Color** button.

   The nozzle check pattern will be printed.

   Do not perform any other operations until the printer completes the printing of the nozzle check pattern.

5. Examine the nozzle check pattern.

Examining the Nozzle Check Pattern

Examine the nozzle check pattern, and clean the print head if necessary.

1. Check if there are missing lines in the pattern A or horizontal white streaks in the pattern B.

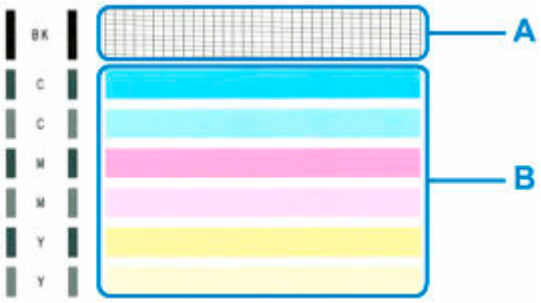

If there are missing lines in the pattern A:

C: Good
D: Bad (lines are missing)

If there are horizontal white streaks in the pattern B:

E: Good
F: Bad (horizontal white streaks are present)

If any color in the pattern A or the pattern B is not printed:

(Example: Magenta pattern is not printed)

If one of the above is applied, cleaning the print head is required.

Cleaning the Print Head

Clean the print head if lines are missing or if horizontal white streaks are present in the printed nozzle check pattern. Cleaning unclogs the nozzles and restores the print head condition. Cleaning the print head consumes ink, so clean the print head only when necessary.

1. Check that printer is turned on.

2. Press the **Setup** button until **2** appears on the LCD.

3. Press the **Black** button or the **Color** button.

   The printer starts cleaning the print head.

   The cleaning will be complete when the **ON** lamp lights after flashing.

   Do not perform any other operations until the printer completes the cleaning of the print head. This takes about 1 minute.

4. Check the print head condition.

   To check the print head condition, print the nozzle check pattern.

Note

- If the problem is not resolved after cleaning the print head twice, clean the print head deeply.

Deep Print Head Cleaning

If print quality does not improve by the standard cleaning of the print head, clean the print head deeply. Cleaning the print head deeply consumes more ink than the standard cleaning of the print head, so clean the print head deeply only when necessary.

1. Check that printer is turned on.

2. Press the **Setup** button until **3** appears on the LCD.

3. Press the **Black** button or the **Color** button.

   The printer starts cleaning the print head deeply.

   The cleaning will be complete when the **ON** lamp lights after flashing.

   Do not perform any other operations until the printer completes the deep cleaning of the print head. This takes about 1 to 2 minutes.

4. Check the print head condition.

   To check the print head condition, print the nozzle check pattern.

If the problem is not resolved, turn off the power and clean the print head deeply again after 24 hours.

If the problem is still not resolved, replace the FINE cartridge with a new one. If the problem is still not resolved after replacing the FINE cartridge, contact your nearest Canon service center to request a repair.

Aligning the Print Head

If printed ruled lines are misaligned or print results are otherwise unsatisfactory, adjust the print head position.

Note

- If the remaining ink level is low, the print head alignment sheet will not be printed correctly.

  Replace the FINE cartridge whose ink is low.

You need to prepare: a sheet of A4 or Letter-sized plain paper

1. Check that printer is turned on.

2. Load a sheet of A4 or Letter-sized plain paper on the rear tray.

   ➡ Loading Plain Paper / Photo Paper

3. Press the **Setup** button until **4** appears on the LCD.

4. Press the **Black** button or the **Color** button.

   The print head alignment sheet will be printed.

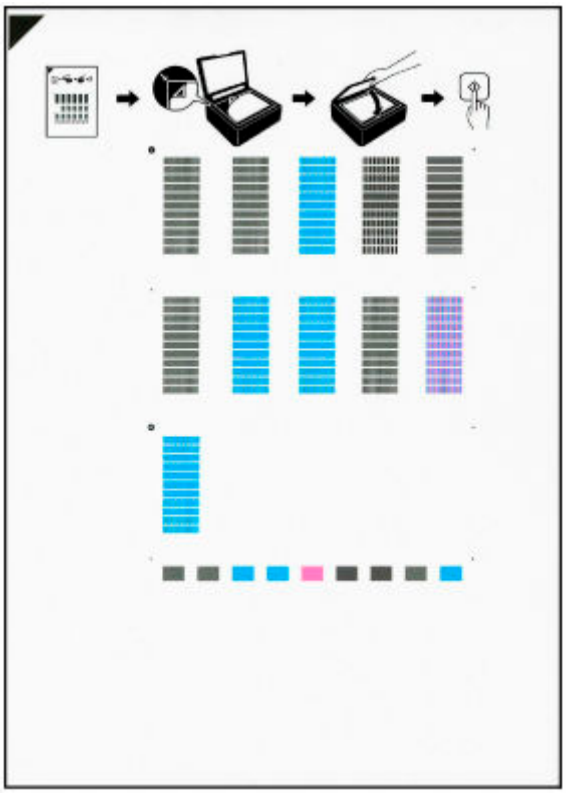

Important

- Do not touch any printed part on the print head alignment sheet. If the sheet is stained or wrinkled, it may not be scanned properly.

- If the print head alignment sheet was not printed correctly, press the **Stop** button, and redo this procedure from the beginning.

5. Place print head alignment sheet on platen.

Place the print head alignment sheet WITH THE PRINTED SIDE FACING DOWN and align the mark ◤ on the upper left corner of the sheet with the alignment mark ⧉.

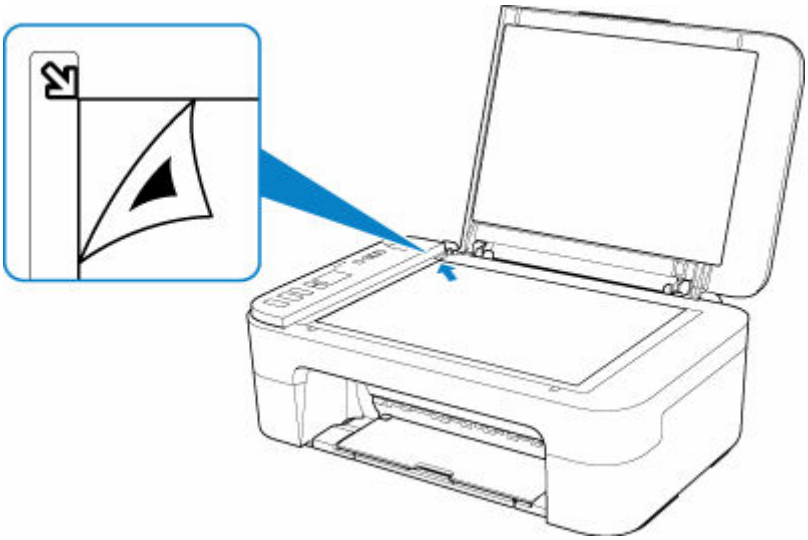

6. Close the document cover gently, then press the **Black** button or the **Color** button.

The printer starts scanning the print head alignment sheet, and the print head position will be adjusted automatically.

The print head position adjustment will be complete when the **ON** lamp lights after flashing.

Remove the print head alignment sheet on the platen.

Important

- Do not open the document cover or move the print head alignment sheet on the platen until adjusting the print head position is complete.
- If adjusting the print head position has failed, the **Alarm** lamp lights up. Press the **OK** button to release the error, then take appropriate action.

  ➡ When Error Occurred

Note

- For Windows, when the print results are still not satisfactory after adjusting the print head position as described above, adjust the print head position manually from the computer.

  ➡ Adjusting Print Head Position Manually
- To print and check the current head position adjustment values, press the **Setup** button until **6** appears on the LCD, and press the **Black** button or the **Color** button.

Performing Maintenance Functions from Your Computer (macOS)

- Opening Remote UI for Maintenance
- Cleaning the Print Heads
- Adjusting Print Head Position
- Checking Ink Status from Your Computer

Opening Remote UI for Maintenance

You can perform maintenance of printer and change the settings from a Remote UI.
The following is the procedure to open a Remote UI.

1. Open **System Preferences**, and select **Printers & Scanners**

2. Select your model from the printer list, and click **Options & Supplies...**

3. Click **Show Printer Webpage...** in **General** tab

   Remote UI starts.

   Note

   - The password may have to be entered after Remote UI starts. In such a case, enter the password and click **OK**. In case you do not know the password, click **Passwords and cookies**.

Related Topics

- Cleaning the Print Heads
- Adjusting Print Head Position
- Checking Ink Status from Your Computer
- Printing a Nozzle Check Pattern
- Managing the Printer Power
- Changing the Printer Operation Mode
- Reducing the Printer Noise

Cleaning the Print Heads

The print head Cleaning and Deep Cleaning functions allow you to clear up clogged print head nozzles. Perform print head Cleaning if printing results are not satisfactory or if a specific color fails to print, even though there is enough ink.

Cleaning

1. Select **Utilities** from Remote UI

2. Click **Cleaning**

   Before performing Cleaning, check the following items:

   Check whether the printer is on and open the printer's cover.
   Check the following items for each ink. Then, if necessary, perform **Cleaning**.

   - Is there ink remaining in the cartridge?
   - Did you push in the ink cartridge completely until you heard a clicking sound?
   - If the orange tape is there, has it been peeled off completely?
     Any remaining tape will hinder ink output.
   - Did you install the ink cartridges in their correct positions?

3. Perform Cleaning

   Click **Yes**.

   Print head Cleaning starts.

4. Complete Cleaning

   Next, the message for Nozzle Check pattern printing is displayed.

5. Check the results

   To check whether the print quality has improved, click **Yes**. To cancel the check process, click **No**.

   If cleaning the head once does not resolve the print head problem, clean it once more.

Important

- **Cleaning** consumes a small amount of ink.
  Cleaning the print head frequently will rapidly deplete your printer's ink supply. Perform Cleaning only when necessary.

Deep Cleaning

Deep Cleaning is more thorough than Cleaning. Perform Deep Cleaning when two **Cleaning** attempts do not resolve the print head problem.

1. Select **Utilities** from Remote UI

2. Click **Deep Cleaning**

   Before performing Deep Cleaning, check the following items:

   Check whether the printer is on and open the printer's cover.
   Check the following items for each ink. Then, if necessary, perform **Deep Cleaning**.

   - Is there ink remaining in the cartridge?
   - Did you push in the ink cartridge completely until you heard a clicking sound?
   - If the orange tape is there, has it been peeled off completely?
     Any remaining tape will hinder ink output.
   - Did you install the ink cartridges in their correct positions?

3. Perform Deep Cleaning

   Click **Yes**.

   Print head Deep Cleaning starts.

4. Complete Deep Cleaning

   Next, the message for Nozzle Check pattern printing is displayed.

5. Check the results

   To check whether the print quality has improved, click **Yes**. To cancel the check process, click **No**.

Important

- **Deep Cleaning** consumes a larger amount of ink than **Cleaning**.
  Cleaning the print head frequently will rapidly deplete your printer's ink supply. Perform Cleaning only when necessary.

Note

- If there is no sign of improvement after **Deep Cleaning**, turn off the printer, wait 24 hours, and then perform **Deep Cleaning** again. If there is still no sign of improvement, see "Ink Does Not Come Out."

Related Topic

➡ Printing a Nozzle Check Pattern

Adjusting Print Head Position

Any error in the print head installation position can cause color and line shifts. Adjusting the print head position improves print results.

Print Head Alignment - Auto

1. Select **Utilities** from Remote UI

2. Click **Print Head Alignment - Auto**

   A message appears.

3. Load paper in printer

   In the rear tray, load 1 sheet of plain A4-sized or Letter-sized paper.

4. Run head position adjustment

   Check that the printer power is on, and then click **Yes**.
   Head alignment starts. Proceed with the operations in accordance with the messages on the screen.

   Important

   - Do not open the cover while printing is in progress; otherwise, printing will stop.

Note

- You can print and check the current settings by clicking on **Print the head alignment value**.

Checking Ink Status from Your Computer

You can check the detailed information such as the remaining ink level and the FINE cartridge types of your model.

If you select **Printer status** from Remote UI, the ink status appears as an illustration.

Estimated ink levels

You can check the types and levels of ink.
When ink levels are running low or an error occurs because there is no ink, a notification icon will appear.

Ink model number

You can look up the correct FINE cartridge for your printer.

Note

- To check the ink status, you can also display the pop-up menu of the Print dialog and select **Supply Levels**.

Cleaning

- Cleaning Exterior Surfaces
- Cleaning Platen and Document Cover
- Cleaning Paper Feed Rollers
- Cleaning Inside the Printer (Bottom Plate Cleaning)

Cleaning Paper Feed Rollers

If the paper feed roller is dirty or paper powder is attached to it, paper may not be fed properly. In this case, clean the paper feed roller.

You need to prepare: a sheet of A4 or Letter-sized plain paper or cleaning sheet available on the market

1. Check that printer is turned on.

2. Remove any paper from the rear tray.

3. Clean the paper feed rollers without paper.

   1. Press the **Setup** button until **7** appears on the LCD.

   2. Press the **Black** button or the **Color** button.

      The paper feed roller will rotate as it is cleaned without paper.

4. Clean the paper feed rollers with paper.

   1. Make sure that the paper feed rollers have stopped rotating, load a sheet of A4 or Letter-sized plain paper or cleaning sheet available on the market on the rear tray.

      ➡ Loading Plain Paper / Photo Paper

   2. Press the **Black** button or the **Color** button.

      The printer starts cleaning. The cleaning will be complete when the paper is ejected.

5. Press the **Stop** button.

If the problem is not resolved after cleaning the paper feed rollers on the rear tray, turn off the power, unplug the power cord, then wipe the paper feed rollers (B) located inside the rear tray with a moistened cotton swab or the like while rotating the white plastic part (A) manually. Perform this operation two or more times. Do not touch the rollers (B) with your fingers.

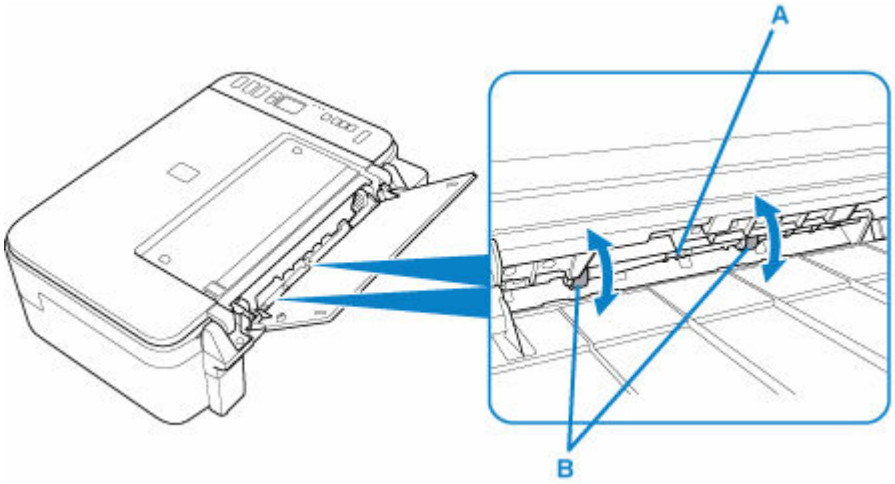

After cleaning the paper feed rollers, turn on the power, then clean the paper feed rollers again.

If the problem is not resolved after cleaning the paper feed roller, contact your nearest Canon service center to request a repair.

Cleaning Inside the Printer (Bottom Plate Cleaning)

Remove stains from the inside of the printer. If the inside of the printer becomes dirty, printed paper may get dirty, so we recommend performing cleaning regularly.

You need to prepare: a sheet of A4 or Letter-sized plain paper*

* Be sure to use a new piece of paper.

1. Check that printer is turned on.

2. Prepare paper.

   1. Fold a single sheet of A4 or Letter-sized plain paper in half widthwise, then unfold the paper.

   2. Load only this sheet of paper on the rear tray with the open side facing you.

   3. Pull out the paper output tray and the output tray extension.

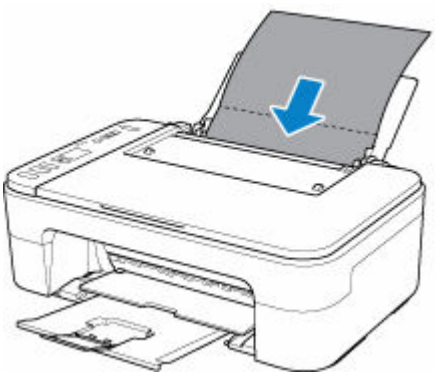

3. Press the **Setup** button until **8** appears on the LCD.

4. Press the **Black** button or the **Color** button.

   The paper cleans the inside of the printer as it feeds through the printer.

   Check the folded parts of the ejected paper. If they are smudged with ink, perform Bottom Plate Cleaning again.

   Note

   - When performing Bottom Plate Cleaning again, be sure to use a new piece of paper.

If the problem is not resolved after performing cleaning again, the protrusions inside the printer may be stained. Wipe off any ink from the protrusions using a cotton swab or the like.

Important

- Before cleaning the printer, turn it off and unplug it.

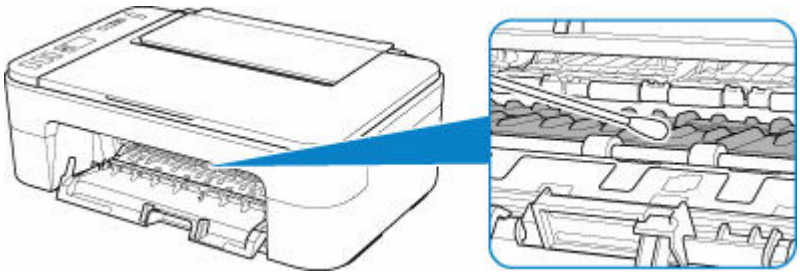

Overview

- **Safety**
  - Safety Precautions
  - Regulatory Information
  - WEEE (EU & EEA)
- **Handling Precautions**
  - Canceling Print Jobs
  - Storing Printed Images
  - Legal Restrictions on Scanning/Copying
  - Printer Handling Precautions
  - Transporting Your Printer
  - When Repairing, Lending, or Disposing of the Printer
  - Keeping Print Quality High
- **Main Components and Their Use**
  - Main Components
  - Power Supply
  - Indication of LCD
- **Changing Settings**
  - Changing Printer Settings from Your Computer (Windows)
  - Changing Printer Settings from Your Computer (macOS)
  - Changing Settings from Operation Panel
- **Specifications**

Safety

- Safety Precautions
- Regulatory Information
- WEEE (EU&EEA)

Safety Precautions

Safety Precautions

- This manual contains important notices and safety precautions about your printer.

  Do not use the printer in ways other than described in the accompanying manuals, as this may result in fire, electric shock or other unexpected accidents.

  Safety standard marks and declarations are only valid for the supported voltages and frequencies in the applicable countries or regions.

⚠ Warning

- Users with cardiac pacemakers:

  This product emits a low-level magnetic flux. If you feel abnormalities, please move away from the product and consult your doctor.

- Do not use the printer in the following cases:

  Stop use immediately, unplug the printer and call your local service representative to request repair.

  - Metal objects or liquids are spilt inside the printer.
  - The printer emits smoke, strange odors, or makes unusual noises.
  - The power cord or plug overheat or are broken, bent or damaged in any way.

- Failure to adhere to the following may result in fire, electric shock, or injury:
  - Do not place product close to the flammable solvents such as alcohol or thinner.
  - Do not open or modify the printer.
  - Use only the power cord/cables that came with your printer. Do not use these cables with other devices.
  - Do not plug in to voltages or frequencies other than those specified.
  - Plug the power cord into the socket completely.
  - Do not plug in or unplug the power cord with wet hands.
  - Do not damage the power cord by twisting, bundling, tying, pulling or excessively bending it.
  - Do not place heavy objects on the power cord.
  - Do not connect multiple power cords to a single electrical outlet. Do not use multiple extension cords.
  - Do not leave the printer plugged in during lightning storms.
  - Always unplug the power cord and cables when cleaning. Do not use flammable sprays or liquids such as alcohol or thinners for cleaning.
  - Unplug the power cord once a month to check that it is not overheating, rusted, bent, scratched, split, or otherwise damaged.

⚠ Caution

- Do not put your hands inside the printer while printing.
- Do not touch the print head or other metal parts immediately after printing.
- Ink
  - Keep ink out of reach of children.
  - If ink is accidentally licked or swallowed, rinse out your mouth and drink one or two glasses of water. If irritation or discomfort occurs, obtain medical advice immediately.

- In case ink gets in contact with eyes, rinse with water immediately. In case ink gets in contact with skin, wash with soap and water immediately. If irritation to eyes or skin persists, obtain medical advice immediately.

- Moving the printer
  - Do not hold the printer by the cassette. Hold the printer by its sides and carry it with both hands.

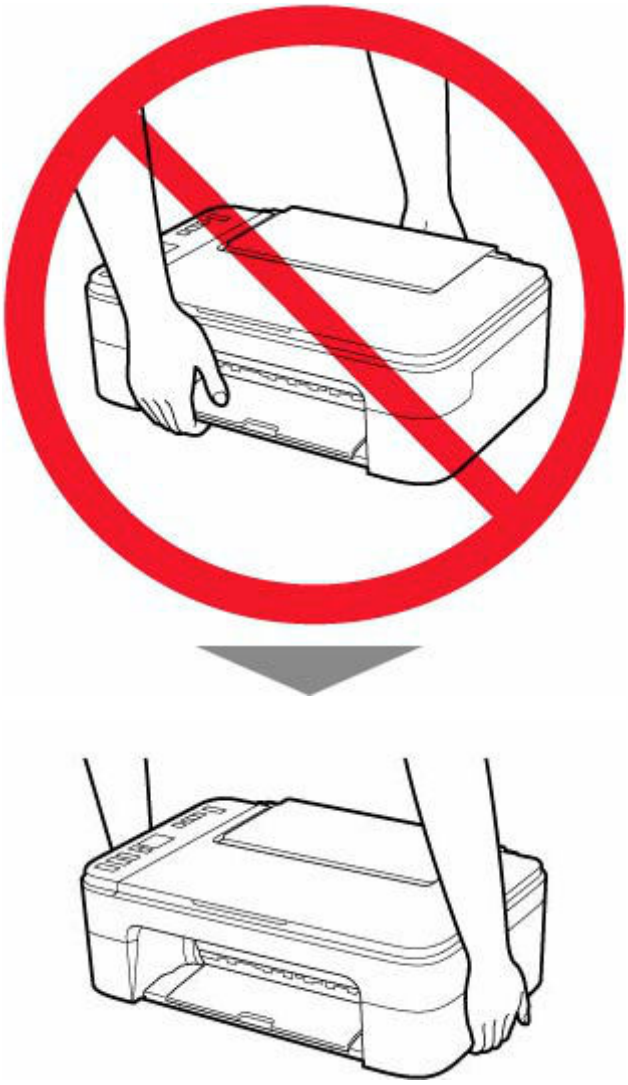

General Notices

Choosing a Location

Refer to "Specifications" in the Online manual for details on operating environment.

- Do not install the printer in a location that is unstable or subject to excessive vibration.
- Do not install the printer in locations that get very hot (direct sunlight, or close to a heating source), very humid or dusty locations, or outdoors.
- Do not place the printer on a thick rug or carpet.
- Do not place the printer flush against a wall.

Power Supply

- Keep the area around the power outlet clear at all times so you can easily unplug the power cord if necessary.
- Never remove the plug by pulling on the cord.

General Notices

- Do not tilt the printer, stand it on end, or turn it upside down. This may cause ink to leak.
- Do not place anything on top of the printer. Be especially careful to avoid metal objects such as paper clips and staples, and containers holding flammable liquids such as alcohol or thinner.
- Be sure to observe the following when loading the original on the platen. Failure to observe the following may cause the scanner to malfunction or the platen glass to break.
  - Do not place any objects weighing 4.4 lb (2.0 kg) or more on the platen glass.
  - Do not put any pressure of 4.4 lb (2.0 kg) or more on the platen glass, such as pressing down the original.
- Do not attempt to open, disassemble or modify the FINE cartridges. Ink may leak and damage your printer.
- Do not throw FINE cartridges in the fire.

Regulatory Information

Users in the U.S.A.

FCC Notice (U.S.A. Only)
For 120V, 60Hz model
Model Number: K10509 (Contains FCC Approved WLAN Module K30365)

This device complies with Part 15 of the FCC Rules. Operation is subject to the following two conditions: (1) This device may not cause harmful interference, and (2) this device must accept any interference received, including interference that may cause undesired operation.

Note: This equipment has been tested and found to comply with the limits for a Class B digital device, pursuant to Part 15 of the FCC Rules. These limits are designed to provide reasonable protection against harmful interference in a residential installation. This equipment generates, uses and can radiate radio frequency energy and, if not installed and used in accordance with the instructions, may cause harmful interference to radio communications.
However, there is no guarantee that interference will not occur in a particular installation. If this equipment does cause harmful interference to radio or television reception, which can be determined by turning the equipment off and on, the user is encouraged to try to correct the interference by one or more of the following measures:

- Reorient or relocate the receiving antenna.
- Increase the separation between the equipment and receiver.
- Connect the equipment into an outlet on a circuit different from that to which the receiver is connected.
- Consult the dealer or an experienced radio/TV technician for help.

Use of a shielded cable is required to comply with Class B limits in Subpart B of Part 15 of the FCC Rules.

Do not make any changes or modifications to the equipment unless otherwise specified in the manual. If such changes or modifications should be made, you could be required to stop operation of the equipment.

Changes or modifications not expressly approved by the party responsible for compliance could void the user's authority to operate equipment.

This transmitter must not be co-located or operating in conjunction with any other antenna or transmitter.

The equipment complies with FCC radiation exposure limits for at uncontrolled equipment. This equipment should be installed and operated with minimum distance at least 20cm between the radiator and persons body (excluding extremities: hands, wrists, feet and ankles) and must not be colocated or operated with any other antenna or transmitter.

Canon U.S.A., Inc.
One Canon Park
Melville, New York 11747
1-800-652-2666

Users in Europe

Product Information for the requirement of COMMISSION REGULATION (EU)

The power consumption in Off Mode or network standby and the transition time to Off or network standby are as follows:
https://www.canon-europe.com/consumer/lot26/

Interference

Do not use the printer around medical equipment or other electronic devices. Signals from the printer may interfere with the correct operation of these devices.

WEEE (EU&EEA)

Only for European Union and EEA (Norway, Iceland and Liechtenstein)

This symbol indicates that this product is not to be disposed of with your household waste, according to the WEEE Directive (2012/19/EU) and national legislation. This product should be handed over to a designated collection point, e.g., on an authorized one-for-one basis when you buy a new similar product or to an authorized collection site for recycling waste electrical and electronic equipment (EEE). Improper handling of this type of waste could have a possible negative impact on the environment and human health due to potentially hazardous substances that are generally associated with EEE. At the same time, your cooperation in the correct disposal of this product will contribute to the effective usage of natural resources. For more information about where you can drop off your waste equipment for recycling, please contact your local city office, waste authority, approved WEEE scheme or your household waste disposal service. For more information regarding return and recycling of WEEE products, please visit www.canon-europe.com/weee.

Nur für Europäische Union und EWR (Norwegen, Island und Liechtenstein)

Dieses Symbol weist darauf hin, dass dieses Produkt gemäß der EU-Richtlinie über Elektro- und Elektronik-Altgeräte (2012/19/EU) und nationalen Gesetzen nicht über den Hausmüll entsorgt werden darf. Dieses Produkt muss bei einer dafür vorgesehenen Sammelstelle abgegeben werden. Dies kann z. B. durch Rückgabe beim Kauf eines ähnlichen Produkts oder durch Abgabe bei einer autorisierten Sammelstelle für die Wiederaufbereitung von Elektro- und Elektronik-Altgeräten geschehen. Der unsachgemäße Umgang mit Altgeräten kann aufgrund potentiell gefährlicher Stoffe, die generell mit Elektro- und Elektronik-Altgeräten in Verbindung stehen, negative Auswirkungen auf die Umwelt und die menschliche Gesundheit haben. Durch die umweltgerechte Entsorgung dieses Produkts tragen Sie außerdem zu einer effektiven Nutzung natürlicher Ressourcen bei. Informationen zu Sammelstellen für Altgeräte erhalten Sie bei Ihrer Stadtverwaltung, dem öffentlich-rechtlichen Entsorgungsträger, einer autorisierten Stelle für die Entsorgung von Elektro- und Elektronik-Altgeräten oder Ihrem örtlichen Entsorgungsunternehmen. Weitere Informationen zur Rückgabe und Entsorgung von Elektro- und Elektronik-Altgeräten finden Sie unter www.canon-europe.com/weee.

Union Européenne, Norvège, Islande et Liechtenstein uniquement.

Ce symbole indique que ce produit ne doit pas être jeté avec les ordures ménagères, conformément à la directive DEEE (2012/19/UE) et à la réglementation de votre pays. Ce produit doit être confié au distributeur à chaque fois que vous achetez un produit neuf similaire, ou à un point de collecte mis en place par les collectivités locales pour le recyclage des Déchets des Équipements Électriques et Électroniques (DEEE). Le traitement inapproprié de ce type de déchet risque d'avoir des répercussions sur l'environnement et la santé humaine, du fait de la présence de substances potentiellement dangereuses généralement associées aux équipements électriques et électroniques. Parallèlement, votre entière coopération dans le cadre de la mise au rebut correcte de ce produit favorisera une meilleure utilisation des ressources naturelles. Pour plus d'informations sur les points de collecte des équipements à recycler, contactez vos services municipaux, les autorités locales compétentes, le plan DEEE approuvé ou le service d'enlèvement des ordures ménagères. Pour plus d'informations sur le retour et le recyclage des produits DEEE, consultez le site: www.canon-europe.com/weee.

Uitsluitend bestemd voor de Europese Unie en EER (Noorwegen, IJsland en Liechtenstein)

Dit symbool geeft aan dat dit product in overeenstemming met de AEEA-richtlijn (2012/19/EU) en de nationale wetgeving niet mag worden afgevoerd met het huishoudelijk afval. Dit product moet worden ingeleverd bij een aangewezen, geautoriseerd inzamelpunt, bijvoorbeeld wanneer u een nieuw gelijksoortig product aanschaft, of bij een geautoriseerd inzamelpunt voor hergebruik van elektrische en elektronische apparatuur (EEA). Een onjuiste afvoer van dit type afval kan leiden tot negatieve effecten op het milieu en de volksgezondheid als gevolg van potentieel gevaarlijke stoffen die veel voorkomen in elektrische en elektronische apparatuur (EEA). Bovendien werkt u door een juiste afvoer van dit product mee aan het effectieve gebruik van natuurlijke hulpbronnen. Voor meer informatie over waar u uw afgedankte apparatuur kunt inleveren voor recycling kunt u contact opnemen met het gemeentehuis in uw woonplaats, de reinigingsdienst, of het afvalverwerkingsbedrijf. U kunt ook het schema voor de afvoer van afgedankte elektrische en elektronische apparatuur (AEEA) raadplegen. Ga voor meer informatie over het inzamelen en recyclen van afgedankte elektrische en elektronische apparatuur naar www.canon-europe.com/weee.

Sólo para la Unión Europea y el Área Económica Europea (Noruega, Islandia y Liechtenstein)

Este símbolo indica que este producto no debe desecharse con los desperdicios domésticos, de acuerdo con la directiva RAEE (2012/19/UE) y con la legislación nacional. Este producto debe entregarse en uno de los puntos de recogida designados, como por ejemplo, entregándolo en el lugar de venta al comprar un producto similar o depositándolo en un lugar de recogida autorizado para el reciclado de residuos de aparatos eléctricos y electrónicos (RAEE). La manipulación inapropiada de este tipo de desechos podría tener un impacto negativo en el entorno y la salud humana, debido a las sustancias potencialmente

peligrosas que normalmente están asociadas con los RAEE. Al mismo tiempo, su cooperación a la hora de desechar correctamente este producto contribuirá a la utilización eficazde los recursos naturales. Para más información sobre cómo puede eliminar el equipo para su reciclado, póngase en contacto con las autoridades locales, con las autoridades encargadas de los desechos, con un sistema de gestión RAEE autorizado o con el servicio de recogida de basuras doméstico. Si desea más información acerca de la devolución y reciclado de RAEE, visite la web www.canon-europe.com/weee.

Només per a la Unió Europea i a l'Espai Econòmic Europeu (Noruega, Islàndia i Liechtenstein)

Aquest símbol indica que aquest producte no s'ha de llençar a les escombraries de la llar, d'acord amb la Directiva RAEE (2012/19/UE) i la legislació nacional. Aquest producte s'hauria de lliurar en un dels punts de recollida designats, com per exemple, intercanviant-lo un per un en comprar un producte similar o lliurant-lo en un lloc de recollida autoritzat per al reciclatge de residus d'aparells elèctrics i electrònics (AEE). La manipulació inadequada d'aquest tipus de residus podria tenir un impacte negatiu en l'entorn i en la salut humana, a causa de les substàncies potencialment perilloses que normalment estan associades als AEE. Així mateix, la vostra cooperació a l'hora de llençar correctament aquest producte contribuirà a la utilització efectiva dels recursos naturals. Per a més informació sobre els punts on podeu lliurar aquest producte per procedir al seu reciclatge, adreceu-vos a la vostra oficina municipal, a les autoritats encarregades dels residus, al pla de residus homologat per la RAEE o al servei de recollida de deixalles domèstiques de la vostra localitat. Per a més informació sobre la devolució i el reciclatge de productes RAEE, visiteu www.canon-europe.com/weee.

Solo per Unione Europea e SEE (Norvegia, Islanda e Liechtenstein)

Questo simbolo indica che il prodotto deve essere oggetto di raccolta separata in conformità alla Direttiva RAEE (2012/19/UE) e alla normativa locale vigente. Il prodotto deve essere smaltito presso un centro di raccolta differenziata, un distributore autorizzato che applichi il principio dell'"uno contro uno", ovvero del ritiro della vecchia apparecchiatura elettrica al momento dell'acquisto di una nuova, o un impianto autorizzato al riciclaggio dei rifiuti di apparecchiature elettriche ed elettroniche. La gestione impropria di questo tipo di rifiuti può avere un impatto negativo sull'ambiente e sulla salute umana causato dalle sostanze potenzialmente pericolose che potrebbero essere contenute nelle apparecchiature elettriche ed elettroniche. Un corretto smaltimento di tali prodotti contribuirà inoltre a un uso efficace delle risorse naturali ed eviterà di incorrere nelle sanzioni amministrative di cui all'art. 255 e successivi del Decreto Legislativo n. 152/06. Per ulteriori informazioni sullo smaltimento e il recupero dei Rifiuti di Apparecchiature Elettriche ed Elettroniche, consultare la Direttiva RAEE, rivolgersi alle autorità competenti, oppure visitare il sito www.canon-europe.com/weee.

Apenas para a União Europeia e AEE (Noruega, Islândia e Liechtenstein)

Este símbolo indica que o produto não deve ser colocado no lixo doméstico, de acordo com a Directiva REEE (2012/19/UE) e a legislação nacional. Este produto deverá ser colocado num ponto de recolha designado, por exemplo, num local próprio autorizado quando adquirir um produto semelhante novo ou num local de recolha autorizado para reciclar resíduos de equipamentos eléctricos e electrónicos (EEE). O tratamento inadequado deste tipo de resíduo poderá causar um impacto negativo no ambiente e na saúde humana devido às substâncias potencialmente perigosas normalmente associadas aos equipamentos eléctricos e electrónicos. Simultaneamente, a sua cooperação no tratamento correcto deste produto contribuirá para a utilização eficaz dos recursos naturais. Para mais informações sobre os locais onde o equipamento poderá ser reciclado, contacte os serviços locais, a autoridade responsável pelos resíduos, o esquema REEE aprovado ou o serviço de tratamento de lixo doméstico. Para mais informações sobre a devolução e reciclagem de produtos REEE, vá a www.canon-europe.com/weee.

Gælder kun i Europæiske Union og EØS (Norge, Island og Liechtenstein)

Dette symbol angiver, at det pågældende produkt ikke må bortskaffes sammen med dagrenovation jf. direktivet om affald af elektrisk og elektronisk udstyr (WEEE) (2012/19/EU) og gældende national lovgivning. Det pågældende produkt skal afleveres på et nærmere specificeret indsamlingssted, f.eks. i overensstemmelse med en godkendt én-til-én-procedure, når du indkøber et nyt tilsvarende produkt, eller produktet skal afleveres på et godkendt indsamlingssted for elektronikaffald. Forkert håndtering af denne type affald kan medføre negative konsekvenser for miljøet og menneskers helbred på grund af de potentielt sundhedsskadelige stoffer, der generelt kan forefindes i elektrisk og elektronisk udstyr. Når du foretager korrekt bortskaffelse af det pågældende produkt, bidrager du til effektiv brug af naturressourcerne. Yderligere oplysninger om, hvor du kan bortskaffe dit elektronikaffald med henblik på genanvendelse, får du hos de kommunale renovationsmyndigheder. Yderligere oplysninger om returnering og genanvendelse af affald af elektrisk og elektronisk udstyr får du ved at besøge www.canon-europe.com/weee.

Μόνο για την Ευρωπαϊκή Ένωση και τον ΕΟΧ (Νορβηγία, Ισλανδία και Λιχτενστάιν)

Αυτό το σύμβολο υποδηλώνει ότι αυτό το προϊόν δεν πρέπει να απορρίπτεται μαζί με τα οικιακά απορρίμματα, σύμφωνα με την Οδηγία σχετικά με τα Απόβλητα Ηλεκτρικού και Ηλεκτρονικού Εξοπλισμού (ΑΗΗΕ) (2012/19/ΕΕ) και την εθνική σας νομοθεσία. Αυτό το προϊόν πρέπει να παραδίδεται σε καθορισμένο σημείο συλλογής, π.χ. σε μια εξουσιοδοτημένη βάση ανταλλαγής όταν αγοράζετε ένα νέο παρόμοιο προϊόν ή σε μια εξουσιοδοτημένη θέση συλλογής για την ανακύκλωση των αποβλήτων Ηλεκτρικού και Ηλεκτρονικού Εξοπλισμού (ΗΗΕ). Ο ακατάλληλος χειρισμός αυτού του τύπου αποβλήτων μπορεί να έχει αρνητικό αντίκτυπο στο περιβάλλον και την υγεία του ανθρώπου, λόγω δυνητικώς επικίνδυνων ουσιών που γενικά συνδέονται με τον ΗΗΕ. Ταυτόχρονα, η συνεργασία σας όσον αφορά τη σωστή απόρριψη αυτού του προϊόντος θα συμβάλει στην αποτελεσματική χρήση των φυσικών πόρων. Για περισσότερες πληροφορίες σχετικά με τα σημεία όπου μπορείτε να απορρίψετε τον εξοπλισμό σας για ανακύκλωση, επικοινωνήστε με το τοπικό γραφείο της πόλης σας, την υπηρεσία απορριμμάτων, το εγκεκριμένο σχήμα ΑΗΗΕ ή την υπηρεσία απόρριψης οικιακών αποβλήτων. Για περισσότερες πληροφορίες σχετικά με την επιστροφή και την ανακύκλωση των προϊόντων ΑΗΗΕ, επισκεφθείτε την τοποθεσία www.canon-europe.com/weee.

Gjelder kun den europeiske union og EØS (Norge, Island og Liechtenstein)

Dette symbolet indikerer at dette produktet ikke skal kastes sammen med husholdningsavfall, i henhold til WEEE-direktiv (2012/19/EU) og nasjonal lov. Produktet må leveres til et dertil egnet innsamlingspunkt, det vil si på en autorisert en-til-en-basis når du kjøper et nytt lignende produkt, eller til et autorisert innsamlingssted for resirkulering av avfall fra elektrisk og elektronisk utstyr (EE-utstyr). Feil håndtering av denne typen avfall kan være miljø- og helseskadelig på grunn av potensielt skadelige stoffer som ofte brukes i EE-utstyr. Samtidig bidrar din innsats for korrekt avhending av produktet til effektiv bruk av naturressurser. Du kan få mer informasjon om hvor du kan avhende utrangert utstyr til resirkulering ved å kontakte lokale myndigheter, et godkjent WEEE-program eller husholdningens renovasjonsselskap. Du finner mer informasjon om retur og resirkulering av WEEE-produkter på www.canon-europe.com/weee.

Vain Euroopan unionin sekä ETA:n (Norja, Islanti ja Liechtenstein) alueelle.

Tämä tunnus osoittaa, että sähkö- ja elektroniikkalaiteromua koskeva direktiivi (SER-direktiivi, 2012/19/EU) sekä kansallinen lainsäädäntö kieltävät tuotteen hävittämisen talousjätteen mukana. Tuote on vietävä asianmukaiseen keräyspisteeseen, esimerkiksi kodinkoneliikkeeseen uutta vastaavaa tuotetta ostettaessa tai viralliseen sähkö- ja elektroniikkalaiteromun keräyspisteeseen. Sähkö- ja elektroniikkalaiteromun virheellinen käsittely voi vahingoittaa ympäristöä ja ihmisten terveyttä, koska laitteet saattavat sisältää ympäristölle ja terveydelle haitallisia aineita. Lisäksi tuotteen asianmukainen hävittäminen säästää luonnonvaroja. Lisätietoja sähkö- ja elektroniikkalaiteromun keräyspisteistä saat kaupunkien ja kuntien tiedotuksesta, jätehuoltoviranomaisilta, sähkö- ja elektroniikkalaiteromun

kierrätysjärjestelmän ylläpitäjältä ja jätehuoltoyhtiöltä. Lisätietoja sähkö- ja elektroniikkalaiteromun keräyksestä ja kierrätyksestä on osoitteessa www.canon-europe.com/weee.

Endast för Europeiska unionen och EES (Norge, Island och Liechtenstein)

Den här symbolen visar att produkten enligt WEEE-direktivet (2012/19/EU) och nationell lagstiftning inte får sorteras och slängas som hushållsavfall. Den här produkten ska lämnas in på en därför avsedd insamlingsplats, t.ex. på en återvinningsstation auktoriserad att hantera elektrisk och elektronisk utrustning (EE-utrustning) eller hos handlare som är auktoriserade att byta in varor då nya, motsvarande köps (en mot en). Olämplig hantering av avfall av den här typen kan ha en negativ inverkan på miljön och människors hälsa på grund av de potentiellt farliga ämnen som kan återfinnas i elektrisk och elektronisk utrustning. Din medverkan till en korrekt avfallshantering av den här produkten bidrar dessutom till en effektiv användning av naturresurserna. Kontakta ditt lokala kommunkontor, berörd myndighet, företag för avfallshantering eller ta del av en godkänd WEEE-organisation om du vill ha mer information om var du kan lämna den kasserade produkten för återvinning. För mer information om inlämning och återvinning av WEEE-produkter, se www.canon-europe.com/weee.

Pouze Evropská unie a EHP (Norsko, Island a Lichtenštejnsko)

Tento symbol znamená, že podle směrnice o OEEZ (2012/19/EU) a podle vnitrostátních právních předpisů nemá být tento výrobek likvidován s odpadem z domácností. Tento výrobek má být vrácen do sběrného místa, např. v rámci autorizovaného systému odběru jednoho výrobku za jeden nově prodaný podobný výrobek nebo v autorizovaném sběrném místě pro recyklaci odpadních elektrických a elektronických zařízení (OEEZ). Nevhodné nakládání s tímto druhem odpadu by mohlo mít negativní dopad na životní prostředí a lidské zdraví, protože elektrická a elektronická zařízení zpravidla obsahují potenciálně nebezpečné látky. Vaše spolupráce na správné likvidaci tohoto výrobku současně napomůže efektivnímu využívání přírodních zdrojů. Další informace o místech sběru vašeho odpadního zařízení k recyklaci vám sdělí místní úřad vaší obce, správní orgán vykonávající dozor nad likvidací odpadu, sběrny OEEZ nebo služba pro odvoz komunálního odpadu. Další informace týkající se vracení a recyklace OEEZ naleznete na adrese www.canon-europe.com/weee.

Csak az Európai Unió és az EGT (Norvégia, Izland és Liechtenstein) országaiban

Ez a szimbólum azt jelzi, hogy a helyi törvények és a WEEE-irányelv (2012/19/EU) szerint a termék nem kezelhető háztartási hulladékként. A terméket a kijelölt nyilvános gyűjtőpontokon kell leadni, például hasonló cserekészülék vásárlásakor, illetve bármelyik, elektromos és elektronikai berendezésekből származó hulladék (WEEE) átvételére feljogosított gyűjtőponton. Az ilyen jellegű hulladékok a nem megfelelő kezelés esetén a bennük található veszélyes anyagok révén ártalmasak lehetnek a környezetre és az emberek egészségére. Továbbá, a termékből származó hulladék megfelelő kezelésével hozzájárulhat a természetes nyersanyagok hatékonyabb hasznosításához. A berendezésekből származó, újrahasznosítható hulladékok elhelyezésére vonatkozó további tudnivalókért forduljon a helyi önkormányzathoz, a közterület-fenntartó vállalathoz, a háztartási hulladék begyűjtését végző vállalathoz, illetve a hivatalos WEEE-képviselethez. További tudnivalókat a WEEE-termékek visszajuttatásáról és újrahasznosításáról a www.canon-europe.com/weee.

Tylko dla krajów Unii Europejskiej oraz EOG (Norwegia, Islandia i Liechtenstein)

Ten symbol oznacza, że zgodnie z dyrektywą WEEE dotyczącą zużytego sprzętu elektrycznego i elektronicznego (2012/19/UE) oraz przepisami lokalnymi nie należy wyrzucać tego produktu razem z odpadami gospodarstwa domowego. Produkt należy przekazać do wyznaczonego punktu gromadzenia odpadów, np. firmie, od której kupowany jest nowy, podobny produkt lub do autoryzowanego punktu gromadzenia zużytego sprzętu elektrycznego i elektronicznego w celu poddania go recyklingowi. Usuwanie tego typu odpadów w nieodpowiedni sposób może mieć negatywny wpływ na otoczenie i zdrowie innych osób ze względu na niebezpieczne substancje stosowane w takim sprzęcie. Jednocześnie pozbycie się zużytego sprzętu w zalecany sposób przyczynia się do właściwego wykorzystania zasobów naturalnych. Aby uzyskać więcej informacji na temat punktów, do których można dostarczyć sprzęt do recyklingu, prosimy skontaktować się z lokalnym urzędem miasta, zakładem utylizacji odpadów, skorzystać z instrukcji zatwierdzonej dyrektywą WEEE lub skontaktować się z przedsiębiorstwem zajmującym się wywozem odpadów domowych. Więcej informacji o zwracaniu i recyklingu zużytego sprzętu elektrycznego i elektronicznego znajduje się w witrynie www.canon-europe.com/weee.

Platí len pre štáty Európskej únie a EHP (Nórsko, Island a Lichtenštajnsko)

Tento symbol znamená, že podľa Smernice 2012/19/EÚ o odpade z elektrických a elektronických zariadení (OEEZ) a podľa platnej legislatívy Slovenskej republiky sa tento produkt nesmie likvidovať spolu s komunálnym odpadom. Produkt je potrebné odovzdať do určenej zberne, napr. prostredníctvom výmeny za kúpu nového podobného produktu, alebo na autorizované zberné miesto, ktoré spracúva odpad z elektrických a elektronických zariadení (EEZ). Nesprávna manipulácia s takýmto typom odpadu môže mať negatívny vplyv na životné prostredie a ľudské zdravie, pretože elektrické a elektronické zariadenia obsahujú potenciálne nebezpečné látky. Spoluprácou na správnej likvidácii produktu prispejete

k účinnému využívaniu prírodných zdrojov. Ďalšie informácie o mieste recyklácie opotrebovaných zariadení získate od miestneho úradu, úradu životného prostredia, zo schváleného plánu OEEZ alebo od spoločnosti, ktorá zaisťuje likvidáciu komunálneho odpadu. Viac informácií nájdete aj na webovej stránke: www.canon-europe.com/weee.

Üksnes Euroopa Liit ja EMP (Norra, Island ja Liechtenstein)

See sümbol näitab, et antud toodet ei tohi vastavalt elektri- ja elektroonikaseadmete jäätmeid käsitlevale direktiivile (2012/19/EL) ning teie riigis kehtivatele õigusaktidele utiliseerida koos olmejäätmetega. Antud toode tuleb anda selleks määratud kogumispunkti, nt müügipunkt, mis on volitatud üks ühe vastu vahetama, kui ostate uue sarnase toote, või elektri- ja elektroonikaseadmete jäätmete ümbertöötlemiseks mõeldud kogumispunkti. Täiendava teabe saamiseks elektri- ja elektroonikaseadmetest tekkinud jäätmete tagastamise ja ümbertöötlemise kohta võtke ühendust kohaliku omavalitsusega, asjakohase valitsusasutusega, asjakohase tootjavastutusorganisatsiooniga või olmejäätmete käitlejaga. Lisateavet leitate ka Interneti-leheküljelt www.canon-europe.com/weee.

Tikai Eiropas Savienībai un EEZ (Norvēģijai, Islandei un Lihtenšteinai)

Šis simbols norāda, ka atbilstoši ES Direktīvai (2012/19/ES) par elektrisko un elektronisko iekārtu atkritumiem (EEIA) un vietējiem tiesību aktiem no šī izstrādājuma nedrīkst atbrīvoties, izmetot to kopā ar sadzīves atkritumiem. Šis izstrādājums ir jānodod piemērotā savākšanas vietā, piemēram, apstiprinātā veikalā, kur iegādājaties līdzīgu jaunu produktu un atstājat veco, vai apstiprinātā vietā izlietotu elektrisko un elektronisko iekārtu pārstrādei. Nepareiza šāda veida atkritumu apsaimniekošana var apdraudēt vidi un cilvēka veselību tādu iespējami bīstamu vielu dēļ, kas parasti ir elektriskajās un elektroniskajās iekārtās. Turklāt jūsu atbalsts pareizā šāda veida atkritumu apsaimniekošanā sekmēs efektīvu dabas resursu izmantošanu. Lai saņemtu pilnīgāku informāciju par vietām, kur izlietoto iekārtu var nodot pārstrādei, sazinieties ar vietējo pašvaldību, atkritumu savākšanas atbildīgo dienestu, pilnvarotu EEIA struktūru vai sadzīves atkritumu apsaimniekošanas iestādi. Lai saņemtu plašāku informāciju par elektrisko un elektronisko iekārtu nodošanu pārstrādei, apmeklējiet tīmekļa vietni www.canon-europe.com/weee.

Tik Europos Sąjungai ir EEE (Norvegijai, Islandijai ir Lichtenšteinui)

Šis ženklas reiškia, kad gaminio negalima išmesti su buitinėmis atliekomis, kaip yra nustatyta Direktyvoje (2012/19/ES) ir nacionaliniuose teisė aktuose dėl EEĮ atliekų tvarkymo. Šį gaminį reikia atiduoti į tam skirtą surinkimo punktą, pvz., pagal patvirtintą keitimo sistemą, kai perkamas panašus gaminys, arba

į elektros ir elektroninės įrangos (EEĮ) atliekų perdirbimo punktą. Netinkamas tokios rūšies atliekų tvarkymas dėl elektros ir elektroninėje įrangoje esančių pavojingų medžiagų gali pakenkti aplinkai ir žmonių sveikatai. Padėdami užtikrinti tinkamą šio gaminio šalinimo tvarką, kartu prisidėsite prie veiksmingo gamtos išteklių naudojimo. Jei reikia daugiau informacijos, kaip šalinti tokias atliekas, kad jos būtų toliau perdirbamos, kreipkitės į savo miesto valdžios institucijas, atliekų tvarkymo organizacijas, patvirtintų EEĮ atliekų sistemų arba jūsų buitinių atliekų tvarkymo įstaigų atstovus. Išsamesnės informacijos apie EEĮ atliekų grąžinimo ir perdirbimo tvarką galite rasti apsilankę tinklalapyje www.canon-europe.com/weee.

Samo za Evropsko unijo in EGP (Norveška, Islandija in Lihtenštajn)

Ta simbol pomeni, da tega izdelka v skladu z direktivo OEEO (2012/19/EU) in državno zakonodajo ne smete odvreči v gospodinjske odpadke. Ta izdelek morate odložiti na ustrezno zbiralno mesto, na primer pri pooblaščenem prodajalcu, ko kupite podoben nov izdelek ali na zbiralno mesto za recikliranje električne in elektronske opreme. Neprimerno ravnanje s takšnimi odpadki lahko negativno vpliva na okolje in človekovo zdravje zaradi nevarnih snovi, ki so povezane z električno in elektronsko opremo. S pravilno odstranitvijo izdelka hkrati prispevate tudi k učinkoviti porabi naravnih virov. Če želite več informacij o tem, kje lahko odložite odpadno opremo za recikliranje, pokličite občinski urad, komunalno podjetje ali službo, ki skrbi za odstranjevanje odpadkov, ali si oglejte načrt OEEO. Če želite več informacij o vračanju in recikliranju izdelkov v skladu z direktivo OEEO, obiščite www.canon-europe.com/weee.

Само за Европейския съюз и ЕИП (Норвегия, Исландия и Лихтенщайн)

Този символ показва, че този продукт не трябва да се изхвърля заедно с битовите отпадъци, съгласно Директивата за ИУЕЕО (2012/19/ЕС) и Вашето национално законодателство. Този продукт трябва да бъде предаден в предназначен за целта пункт за събиране, например на база размяна, когато купувате нов подобен продукт, или в одобрен събирателен пункт за рециклиране на излязло от употреба електрическо и електронно оборудване (ИУЕЕО). Неправилното третиране на този тип отпадъци може да доведе до евентуални отрицателни последствия за околната среда и човешкото здраве поради потенциално опасните вещества, които обикновено са свързани с ЕЕО. В същото време Вашето съдействие за правилното изхвърляне на този продукт ще допринесе за ефективното използване на природните ресурси. Повече информация относно местата, където може да предавате излязло от употреба оборудване за рециклиране, може да получите от местните власти, от органа, отговорен за отпадъците и от одобрена система за излязло от употреба ЕЕО или от Вашата местна служба за битови отпадъци. За повече информация относно връщането и рециклирането на продукти от излязло от употреба ЕЕО посетете www.canon-europe.com/weee.

Doar pentru Uniunea Europeană şi EEA (Norvegia, Islanda şi Liechtenstein)

Acest simbol indică faptul că acest produs nu trebuie aruncat o dată cu reziduurile menajere, în conformitate cu Directiva DEEE (Directiva privind deşeurile de echipamente electrice şi electronice) (2012/19/UE) şi legile naţionale. Acest produs trebuie transportat la un punct de colectare special, de exemplu un centru care preia produsele vechi atunci când achiziţionaţi un produs nou similar, sau la un punct de colectare autorizat pentru reciclarea deşeurilor provenite de la echipamentele electrice şi electronice (EEE). Mânuirea necorespunzătoare a acestor tipuri de deşeuri poate avea un impact negativ asupra mediului înconjurător şi sănătăţii indivizilor, din cauza substanţelor potenţial nocive care sunt în general asociate cu EEE. În acelaşi timp, cooperarea dvs. la reciclarea corectă a acestui produs va contribui la utilizarea efectivă a resurselor naturale. Pentru mai multe informaţii privind locurile de reciclare a deşeurilor provenite de la echipamente, contactaţi biroul primăriei locale, autoritatea responsabilă cu colectarea deşeurilor, schema DEEE aprobată sau serviciul de colectare a deşeurilor menajere. Pentru mai multe informaţii privind returnarea şi reciclarea produselor DEEE, vizitaţi www.canon-europe.com/weee.

Samo za Europsku uniju i EEZ (Norveška, Island i Lihtenštajn)

Ovaj simbol pokazuje da se ovaj proizvod ne smije odlagati s kućnim otpadom sukladno WEEE Direktivi (2012/19/EC) i vašem nacionalnom zakonu. Ovaj proizvod je potrebno predati na posebno mjesto za sakupljanje otpada, npr. na ovlašteno mjesto gdje možete zamijeniti staro za novo ukoliko kupujete novi sličan proizvod ili na ovlašteno mjesto za sakupljanje rabljene električne i elektroničke opreme (EEE) za recikliranje. Nepropisno rukovanje ovom vrstom otpada može imati negativan učinak na okolinu i zdravlje ljudi zbog supstanci koje su potencijalno opasne za zdravlje, a općenito se povezuju s EEE. Istovremeno, vaša će suradnja kroz propisno odlaganje ovog proizvoda doprinijeti efektivnoj uporabi prirodnih resursa. Za više informacija o tome gdje možete odložiti svoj otpad za recikliranje obratite se vašem lokalnom gradskom uredu, komunalnoj službi, odobrenom WEEE programu ili službi za odlaganje kućnog otpada. Ostale informacije o vraćanju i recikliranju WEEE proizvoda potražite na www.canon-europe.com/weee.

Korisnici u Srbiji

Ovaj simbol označava da ovaj proizvod ne sme da se odlaže sa ostalim kućnim otpadom, u skladu sa WEEE Direktivom (2012/19/EU) i nacionalnim zakonima. Ovaj proizvod treba predati određenom centru za prikupljanje, npr. na osnovi "jedan-za-jedan" kada kupujete sličan novi proizvod, ili ovlašćenom centru za prikupljanje za reciklažu istrošene električne i elektronske opreme (EEE). Nepravilno rukovanje

ovom vrstom otpada može da ima moguće negativne posledice po životnu sredinu i ljudsko zdravlje usled potencijalno opasnih materijala koji se uglavnom vezuju za EEE. U isto vreme, vaša saradnja na ispravnom odlaganju ovog proizvoda će doprineti efikasnom korišćenju prirodnih resursa. Za više informacija o tome gde možete da predate vašu staru opremu radi recikliranje, vas molimo, da kontaktirate lokalne gradske vlasti, komunalne službe, odobreni plan reciklaže ili Gradsku čistoću. Za više informacija o vraćanju i recikliranju WEEE proizvoda, posetite stranicu www.canon-europe.com/weee.

Handling Precautions

- Canceling Print Jobs
- Storing Printed Images
- Legal Restrictions on Scanning/Copying
- Printer Handling Precautions
- Transporting Your Printer
- When Repairing, Lending, or Disposing of the Printer
- Keeping Print Quality High

Legal Restrictions on Scanning/Copying

Scanning, printing, copying, or modifying copies of the following may be punishable under law.

This list is non-exhaustive. When in doubt, check with a local legal representative.

- Paper money
- Money orders
- Certificates of deposit
- Postage stamps (canceled or uncanceled)
- Identification badges or insignia
- Selective service or draft papers
- Checks or drafts issued by governmental agencies
- Motor vehicle licenses and certificates of title
- Traveler's checks
- Food stamps
- Passports
- Immigration papers
- Internal revenue stamps (canceled or uncanceled)
- Bonds or other certificates of indebtedness
- Stock certificates
- Copyrighted works or works of art, without the owner's consent

Printer Handling Precautions

Do not place any object on the document cover!

Do not place any object on the document cover. It will fall into the rear tray when the document cover is opened and cause the printer to malfunction. Also, place the printer where objects will not fall on it.

Transporting Your Printer

When relocating the printer for changing your living place or repairing it, make sure of the following.

Important

- Pack the printer in a sturdy box so that it is placed with its bottom facing down, using sufficient protective material to ensure safe transport.
- With the FINE cartridge left installed in the printer, press the **ON** button to turn off the power. This allows the printer to automatically cap the print head, thus preventing it from drying.
- After packing, do not tilt the box containing the printer or turn it on its side or upside down. Doing so may cause the ink to leak during transport and cause damage to the printer.
- When a shipping agent is handling transport of the printer, have its box marked "THIS SIDE UP" to keep the printer with its bottom facing down. Mark also with "FRAGILE" or "HANDLE WITH CARE".

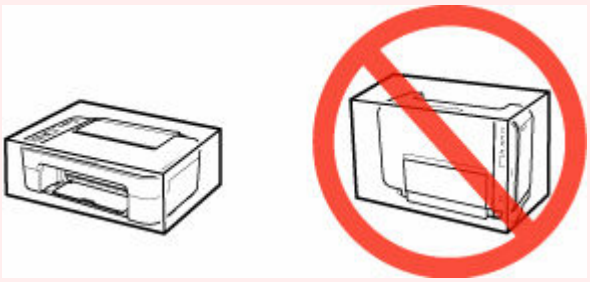

1. Turn the printer off.

2. Check that **ON** lamp is off and unplug power cord.

   Important

   - Do not unplug the printer while the **ON** lamp is lit or flashing, as it may cause malfunction or damage to the printer, making the printer unable to print.

3. Retract the paper output tray and the output tray extension, then close the paper support.

4. Unplug the printer cable from the computer and from the printer, then unplug the power cord from the printer.

5. Use adhesive tape to secure all the covers on the printer to keep them from opening during transportation. Then pack the printer in the plastic bag.

6. Attach the protective material to the printer when packing the printer in the box.

When Repairing, Lending, or Disposing of the Printer

If you have entered personal data, passwords and/or other security settings on the printer, such information may be stored in the printer.

When sending the printer for repair, lending or transferring the printer to another person, or disposing of the printer, please be sure to follow the steps below in order to delete such information and prevent third parties from accessing it.

1. Press the **Setup** button until **17** appears on the LCD.

2. Press the **Black** button or the **Color** button.

Keeping Print Quality High

The key to printing with the optimal printing quality is to prevent the print head from drying or clogging. Always observe the following rules for optimal printing quality.

Note

- Depending on the type of paper, ink may blur if you trace the printed area with a highlight pen or paint-stick, or bleed if water or sweat comes in contact with the printed area.

Never unplug the power cord until the power is turned off!

If you press the **ON** button to turn off the power, the printer caps the print head (nozzles) automatically to prevent from drying. If you unplug the power cord from the wall outlet before the **ON** lamp is turned off, the print head will not be capped properly and this will cause drying or clogging.

When unplugging the power cord, check that the **ON** lamp is not lit.

Print periodically!

Just as the tip of a felt pen becomes dry and unusable if it has not been used for a long time, even if it is capped, the print head too, may become dried or clogged if the printer has not been used for a long time. We recommend you to use the printer at least once a month.

Main Components and Their Use

- Main Components
- Power Supply
- Indication of LCD

Main Components

- Front View
- Rear View
- Inside View
- Operation Panel

Front View

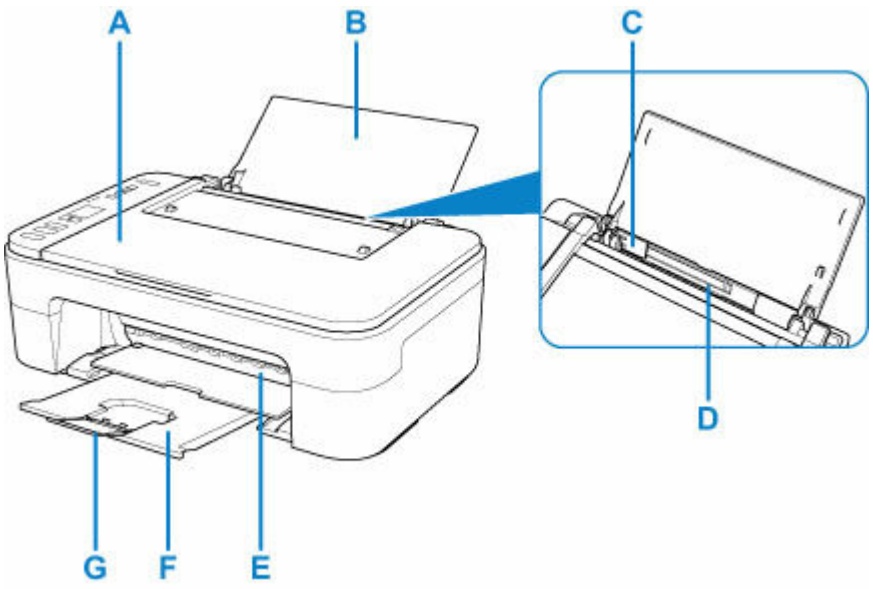

A: Document Cover

Open to load an original on the platen.

B: Paper Support

Open to load paper on the rear tray.

C: Paper Guide

Align with the left side of the paper stack.

D: Rear Tray

Load paper here. Two or more sheets of the same size and type of paper can be loaded at the same time, and fed automatically one sheet at a time.

➡ Loading Plain Paper / Photo Paper

E: Cover

Open to replace the FINE cartridge or remove jammed paper inside the printer.

F: Paper Output Tray

Printed paper is ejected. Pull out it before printing.

G: Output Tray Extension

Extend to support ejected paper.

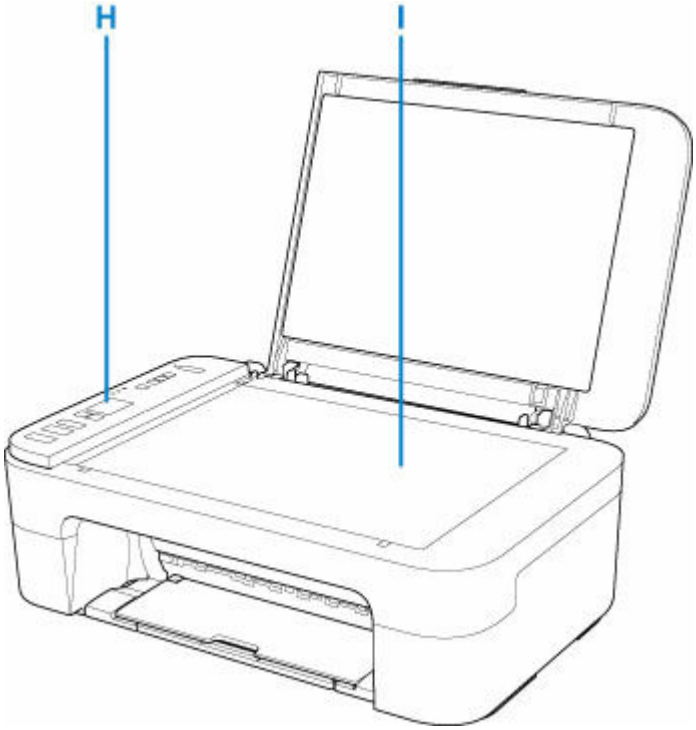

H: Operation Panel

Use to change the settings of the printer or to operate it.

➡ Operation Panel

I: Platen

Load an original here.

Rear View

A: Power Cord Connector

Plug in the supplied power cord.

B: USB Port

Plug in the USB cable to connect the printer with a computer.

Important

- Do not touch the metal casing.
- Do not plug in or unplug the USB cable while the printer is printing or scanning with the computer. This can cause trouble.

Inside View

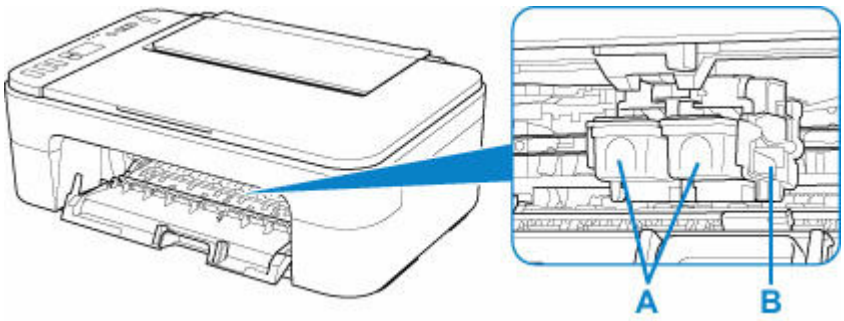

A: FINE Cartridge (ink cartridges)

A replaceable cartridge that integrates print head and ink tank.

B: FINE Cartridge Holder

Install the FINE cartridge.

The color FINE cartridge should be installed into the left slot and the black FINE cartridge should be installed into the right slot.

Note

- For details on replacing a FINE cartridge, see Replacing a FINE Cartridge.

Important

- The area around the parts C may be splattered with ink. This does not affect the performance of the printer.
- Do not touch the parts C. The printer may not print properly if you touch them.

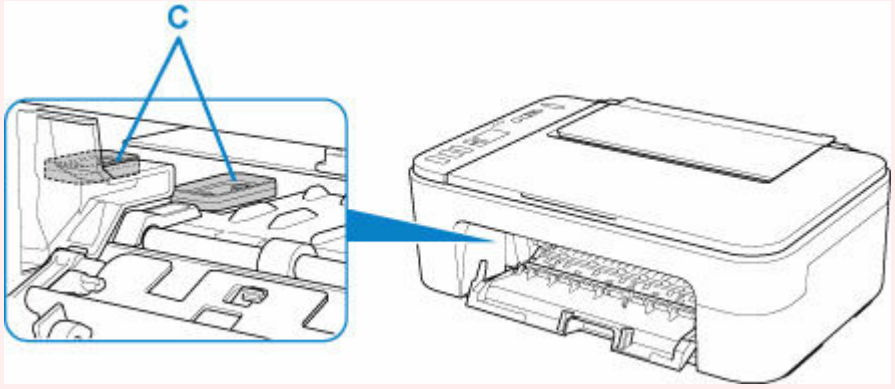

Operation Panel

* All lamps on the operation panel are shown lit in the figure below for explanatory purposes.

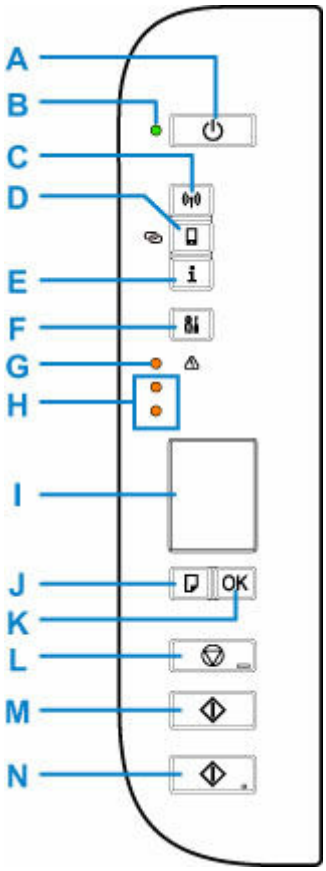

A: ON button

Turns the power on or off. Before turning on the power, make sure that the document cover is closed.

B: ON lamp

Lights after flashing when the power is turned on.

C: Network button

Activates/deactivates the Wi-Fi.

D: Direct button

Activates/deactivates Wireless Direct.

E: Information button

Starts printing network settings information.

F: Setup button

Select a menu to perform printer maintenance and to change printer settings. Pressing this button repeatedly switches the segment display on the LCD.

G: Alarm lamp

Lights or flashes when an error occurs.

H: Ink lamps

Light or flash when ink runs out, etc.

The upper lamp indicates the black FINE cartridge status, the lower lamp the color FINE cartridge status.

I: LCD (Liquid Crystal Display)

Displays the number of copies, maintenance code, error code or various icons.

➡ Indication of LCD

J: Paper Select button

Select the paper size of the printer.

K: OK button

Finalizes the selection of paper size setting. This button is also used to resolve an error.

L: Stop button

Cancels operations. You can press this button to cancel a print, copy, or scan job in progress.

M: Black button*

Starts black & white copying. You can also press this button to finalize your selection for the setting item or to resolve an error.

N: Color button*

Starts color copying. You can also press this button to finalize your selection for the setting item or to resolve an error.

* In the software applications or manuals, the **Color** and **Black** buttons are collectively called the "Start" or "OK" button.

Power Supply

- Checking that Power Is On
- Turning the Printer On and Off
- Checking the Power Plug/Power Cord
- Unplugging the Printer

Checking that Power Is On

The **ON** lamp is lit when the printer is turned on.

Even if the LCD is off, if the **ON** lamp is lit, the printer is on.

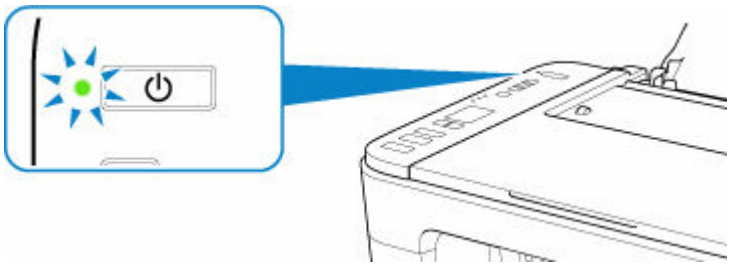

Note

- It may take a while for the printer to start printing immediately after you turn on the printer.
- The LCD will turn off if the printer is not operated for about 10 minutes. To restore the display, press any button or perform the print operation.

Turning the Printer On and Off

Turning on the printer

1. Press the **ON** button to turn on the printer.

   The **ON** lamp flashes and then remains lit.

   ➡ Checking that Power Is On

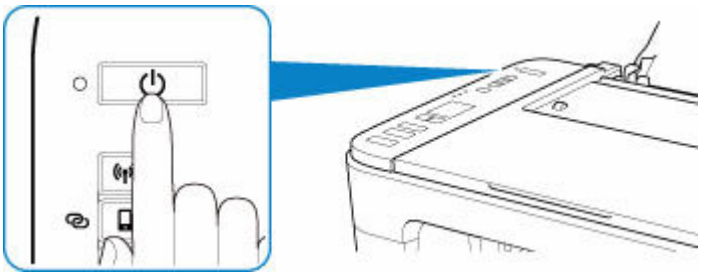

Note

- It may take a while for the printer to start printing immediately after you turn on the printer.
- If the error code appears on the LCD, see When Error Occurred.
- You can set the printer to automatically turn on when a print or scan operation is performed from a computer connected by USB cable or wireless network. This feature is set to off by default.

  From the printer

  ➡ Turning on/off Printer Automatically

  From the computer

  – For Windows:

    ➡ Managing the Printer Power

  – For macOS:

    ➡ Managing the Printer Power

Turning off the printer

1. Press the **ON** button to turn off the printer.

   When the **ON** lamp stops flashing, the printer is turned off.

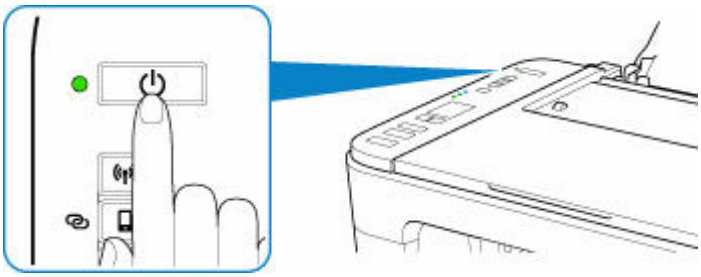

Important

- When you unplug the power cord after turning off the printer, be sure to confirm that the **ON** lamp is off.

Note

- You can set the printer to automatically turn off when no operations are performed or no print jobs are sent to the printer for a certain interval. This feature is set to on by default.

  From the printer

  ➡ Turning on/off Printer Automatically

  From the computer

  – For Windows:

    ➡ Managing the Printer Power

  – For macOS:

    ➡ Managing the Printer Power

Checking the Power Plug/Power Cord

Unplug the power cord once a month to confirm that the power plug/power cord does not have anything unusual described below.

- The power plug/power cord is hot.
- The power plug/power cord is rusty.
- The power plug/power cord is bent.
- The power plug/power cord is worn.
- The power plug/power cord is split.

⚠ Caution

- If you find anything unusual with the power plug/power cord described above, unplug the power cord and call for service. Using the printer with one of the unusual conditions above may cause a fire or an electric shock.

Unplugging the Printer

To unplug the power cord, follow the procedure below.

Important

- When you unplug the power cord, press the **ON** button, then confirm that the **ON** lamp is off. Unplugging the power cord while the **ON** lamp is lit or flashing may cause drying or clogging of the print head and print quality may be reduced.

1. Press the **ON** button to turn the printer off.

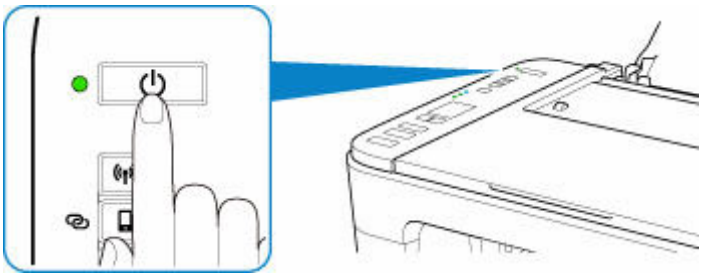

2. Confirm that the **ON** lamp is off.

3. Unplug the power cord.

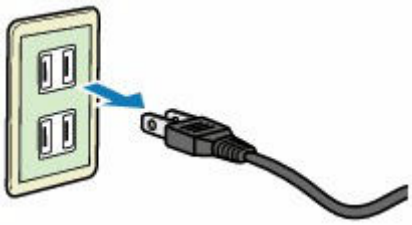

The specification of the power cord differs depending on the country or region of use.

Indication of LCD

The number of copies, maintenance code, error code or various icons is displayed on the LCD.

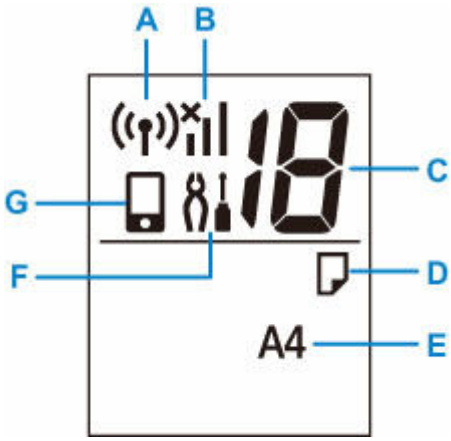

A: Network status

Appears when Wi-Fi is enabled.

B: Current network status

Displays the current network status.

The icon differs depending on the network of use or the network status.

(Signal strength: 81 % or more): You can use the printer over a Wi-Fi without any problems.

(Signal strength: 51 % or more): The problem such as the printer cannot print may occur according to the network status. We recommend placing the printer near the wireless router.

(Signal strength: 50 % or less): The problem such as the printer cannot print may occur. Place the printer near the wireless router.

Wi-Fi is enabled but the printer is not connected to the wireless router.

C: Segment display

Displays the number of copies, maintenance code, or error code.

The number from 0 to 19 or alphabet is displayed.

D: Paper status

Appears during paper loaded on the rear tray. This icon also flashes while you select the paper size after pressing the **Paper Select** button.

* This icon does not appear if the paper mismatch detection function is disable.

E: Paper size

Displays the current paper size. The paper size also flashes while you select the paper size after pressing the **Paper Select** button.

F: Setup

Appears by pressing the **Setup** button. During this icon, select a menu to perform printer maintenance and to change printer settings.

G: Direct

Appears when Wireless Direct is enabled.

Changing Settings

- Changing Printer Settings from Your Computer (Windows)
- Changing Printer Settings from Your Computer (macOS)
- Changing Settings from Operation Panel

Changing Printer Settings from Your Computer (macOS)

- Managing the Printer Power
- Changing the Printer Operation Mode

Managing the Printer Power

Printer power supply is operated from Remote UI.

Energy saving settings

Energy saving settings allow you to set **Auto power off** and **Auto power on**.

Auto power off is the function wherein the printer automatically turns itself off, when data is not sent or the printer remains inactive for a certain period.
The **Auto power on** function automatically turns on the printer when data is received.

1. Selecting **Device settings** from Remote UI

2. Click **Energy saving settings**

3. Complete the following settings:

   Auto power off
   Specify the time from the list. Printer automatically turns itself off, when data is not sent within the specified time or the printer has remained inactive.

   Auto power on
   When you check this check box, the printer automatically turns itself on when data is sent.

   Note

   - Enabling auto power on, disabling auto power off, or extending the time for auto power off will increase power consumption.

4. Apply the settings

   Click **OK**.
   The printer will operate with the changed settings hereafter.

Changing the Printer Operation Mode

If necessary, switch between various modes of printer operation.

1. Check whether the printer is on and select **Device settings** from Remote UI

2. If necessary, complete the following settings:

   Custom settings - Detect paper setting mismatch

   If the check box is deselected, at the time of printing from PC, you can continue to print without the message display even if the paper settings set in the Print dialog differs from the paper information registered to the printer.

   Ink drying wait time

   You can set the length of the printer rest time until printing of the next page begins. The wait time becomes longer as the value set in the list increases, and shorter as the value decreases.
   If the paper gets stained because the next page is ejected before the ink on the printed page dries, increase the ink drying wait time.
   Reducing the ink drying wait time speeds up printing.

3. Apply the settings

   Click **OK**.

   The printer operates with the modified settings hereafter.

Changing Settings from Operation Panel

- Quiet setting
- Turning on/off Printer Automatically
- Initializing Printer Settings
- Switching/Disabling Wireless Connection Function

Quiet setting

Enables this function on the printer if you want to reduce the operating noise, such as when printing at night.

Follow the procedure below to perform setting.

1. Check that printer is turned on.
2. Press the **Setup** button until **12** appears on the LCD.
3. Press the **Color** button.

   To disable the function, press the **Black** button.

Important

- Operating speed may be reduced compared to when the quiet mode is not selected.

Note

- You can set the quiet mode from the operation panel of the printer, the computer. No matter how you set the quiet mode, the mode is applied when you perform operations from the operation panel of the printer or printing and scanning from the computer.
- You can set the quiet mode from ScanGear (scanner driver) in Windows.

Initializing Printer Settings

You can initialize the printer settings.

Important

- When using the printer over Wi-Fi, note that initialization erases all network settings on the printer, and printing operation from a computer over Wi-Fi may become impossible. To use the printer over Wi-Fi, perform setup according to the instructions on our website.

Follow the procedure below to initialize the printer settings.

1. Check that printer is turned on.
2. Press the **Setup** button until **17** appears on the LCD.
3. Press the **Black** button or the **Color** button.

All the printer settings are initialized. The administrator password specified by Remote UI or IJ Network Device Setup Utility reverts to the default setting.

After resetting, perform setup again as necessary.

Note

- You cannot set the following setting items back to the default:
  - The current position of the print head
  - CSR (Certificate Signing Request) for encryption method (SSL/TLS) setting

Switching/Disabling Wireless Connection Function

Follow the procedure below to switch the wireless connection function or to disable it.

1. Check that printer is turned on.
2. Press the **Network** button.
3. Make sure that the icon has disappeared on the LCD.

Specifications

General Specifications

Interface	**USB Port:** Hi-Speed USB * **Network Port:** Wi-Fi: IEEE802.11n / IEEE802.11g / IEEE802.11b * A computer that complies with Hi-Speed USB standard is required. Since the Hi-Speed USB interface is fully upwardly compatible with USB 1.1, it can be used at USB 1.1. USB and the network can be used at the same time.
Operating environment	**Temperature:** 41 to 95 °F (5 to 35 °C) **Humidity:** 10 to 90 % RH (no condensation) * The performance of the printer may be reduced under certain temperature and humidity conditions. Recommended conditions: **Temperature:** 59 to 86 °F (15 to 30 °C) **Humidity:** 10 to 80 % RH (no condensation) * For the temperature and humidity conditions of papers such as photo paper, refer to the paper's packaging or the supplied instructions.
Storage environment	**Temperature:** 32 to 104 °F (0 to 40 °C) **Humidity:** 5 to 95 % RH (no condensation)
Power supply	AC 100-240 V, 50/60 Hz (The supplied power cord is only for the country or region you purchased.)
Power consumption	**Printing (Copy):** 11 W or less *1 **Standby (minimum):** 1.7 W or less *1*2 **OFF:** 0.3 W or less *1 USB connection to PC *2 The wait time for standby cannot be changed.
External dimensions (W x D x H)	Approx. 17.2 x 12.5 x 5.8 in. (Approx. 435 x 316 x 145 mm) * With the trays retracted.
Weight	Approx. 8.5 lb (Approx. 3.9 kg) * With the FINE Cartridges installed.

Scan Specifications

Scanner driver	**Windows:** TWAIN 1.9 Specification, WIA
Maximum scanning size	A4/Letter, 8.5 x 11.7 in. (216 x 297 mm)
Optical resolution (horizontal x vertical)	600 x 1200 dpi * * Optical Resolution represents the maximum sampling rate based on ISO 14473.
Gradation (Input / Output)	**Gray:** 16 bit/8 bit **Color:** RGB each 16 bit/8 bit

Network Specifications

Communication protocol	SNMP, HTTP, TCP/IP (IPv4/IPv6)
Wi-Fi	**Supported Standards:** IEEE802.11n / IEEE802.11g / IEEE802.11b **Frequency bandwidth:** 2.4 GHz **Channel:** 1-11 or 1-13 * Frequency bandwidth and available channels differ depending on country or region. **Communication distance:** Indoors 164 feet/50 m * Effective range varies depending on the installation environment and location. **Security:** WEP (64/128 bits) WPA-PSK (TKIP/AES) WPA2-PSK (TKIP/AES) **Setup:** WPS (Push button configuration/PIN code method) Easy wireless connect

Minimum System Requirements

Conform to the operating system's requirements when higher than those given here.

Windows

Operating System	Windows 10, Windows 8.1, Windows 7 SP1 Note: Operation can only be guaranteed on a PC with pre-installed Windows 7 or later.
Hard Disk Space	2.0 GB or more Note: For bundled software installation. The necessary amount of hard disk space may be changed without notice.

macOS

Operating System	OS X 10.11.6, macOS 10.12 - macOS 10.14
Hard Disk Space	1.0 GB or more Note: For bundled software installation. The necessary amount of hard disk space may be changed without notice.

Other Supported OS

iOS, Android, Windows 10 Mobile Some functions may not be available with the supported OS. Refer to the Canon web site for details.

Mobile Printing Capability

Apple AirPrint
Google Cloud Print
PIXMA Cloud Link
Windows 10 Mobile Print
Mopria Print Service

- Internet connection or CD-ROM drive is required to install MP Drivers.
- Windows: Some functions may not be available with Windows Media Center.
- Windows: The TWAIN driver (ScanGear) is based on the TWAIN 1.9 Specification and requires the Data Source Manager bundled with the operating system.
- macOS: For macOS, an internet connection is required during software installation.
- In an in-house network environment, the 5222 port must be open. Contact the network administrator for details.
- Internet connection is required to use all the user's guide.

Information in this manual is subject to change without notice.

Information about Paper

- **Supported Media Types**
  - Paper Load Limit
- **Unsupported Media Types**
- **Handling Paper**
- **Print Area**

Supported Media Types

For best results, choose paper designed for how you are printing. A variety of paper for documents as well as photos or illustrations is available from Canon. Use genuine Canon paper to print important photos, when possible.

- Media Types
- Page Sizes
- Paper Weight

Media Types

Genuine Canon paper

Note

- For warnings on use of the non-printable side, see each product's usage information.
- Page sizes and media types differ depending on the country or region where the paper is sold. For details on page sizes and media types, access the Canon website.
- Genuine Canon paper is not available in some countries or regions. Note that in the United States, Canon paper is not sold by model number. Instead, purchase paper by name.

Paper for printing documents:

- Canon Red Label Superior <WOP111>
- Canon Océ Office Colour Paper <SAT213>

Paper for printing photos:

- Glossy Photo Paper "Everyday Use" <GP-501/GP-508>*1
- Photo Paper Glossy <GP-701>*1
- Photo Paper Plus Glossy II <PP-201/PP-208/PP-301>*1

Paper for making original goods:

- Photo Stickers (16 stickers per sheet) <PS-108>
- Photo Stickers (Free Cutting) <PS-208>
- Photo Stickers (Variety Pack) <PS-808>
- Restickable Photo Paper <RP-101>
- Removable Photo Stickers <PS-308R>
- Magnetic Photo Paper <MG-101/PS-508>

Paper other than genuine Canon paper

- Plain Paper (including recycled paper)

*1 A4 and Letter paper sizes are not supported.

- Paper Load Limit

➡ Paper Settings on the Printer Driver (Windows)

Note

- When printing photos saved on a PictBridge (Wi-Fi) compliant device, you must specify the page size and media type.

  ➡ Printing from Digital Camera

Page Sizes

You can use the following page sizes.

Note

- Page sizes and media types the printer supports differ depending on the OS you are using.

Standard sizes:

- Letter
- Legal
- A5
- A4
- B5
- KG/4"x6"(10x15)
- 5"x7"(13x18cm)
- L(89x127mm)
- 2L(127x178mm)
- Square 5"
- Hagaki

Special sizes

Special page sizes must be within the following limits:

- Minimum size: 3.50 x 5.00 in. (89.0 x 127.0 mm)
- Maximum size: 8.50 x 26.61 in. (215.9 x 676.0 mm)

Paper Weight

You can use paper in the following weight range.

- Plain paper: From 17 to 28 lb (64 to 105 g /m^2)

Paper Load Limit

This section shows the paper load limits of the rear tray and the paper output tray.

➡ Paper Load Limits of Rear Tray
➡ Paper Load Limit of Paper Output Tray

Note

- Page sizes and media types differ depending on the country or region where the paper is sold. For details on page sizes and media types, access the Canon website.

Paper Load Limits of Rear Tray

Genuine Canon Paper

Paper for printing documents:

Media Name <Model No.>	Rear Tray
Canon Red Label Superior <WOP111>	A4: Approx. 60 sheets
Canon Océ Office Colour Paper <SAT213>	A4: Approx. 50 sheets

Paper for printing photos:

Media Name <Model No.>	Rear Tray
Glossy Photo Paper "Everyday Use" <GP-501/GP-508>*1 Photo Paper Glossy <GP-701>*1 Photo Paper Plus Glossy II <PP-201/PP-208/PP-301>*1	5"x7"(13x18cm), 2L(127x178mm), Square 5": 10 sheets KG/4"x6"(10x15), L(89x127mm), Hagaki: 20 sheets

Paper for making original goods:

Media Name <Model No.>	Rear Tray
Photo Stickers (16 stickers per sheet) <PS-108> Photo Stickers (Free Cutting) <PS-208> Photo Stickers (Variety Pack) <PS-808> Restickable Photo Paper <RP-101> Removable Photo Stickers <PS-308R> Magnetic Photo Paper <MG-101/PS-508>	1 sheet

Paper other than Genuine Canon Paper

Common Name	Rear Tray
Plain Paper (including recycled paper)*2	Approx. 60 sheets (Legal: 10 sheets)

*1 Feeding from a loaded stack of paper may leave marks on the printed side or prevent efficient feeding. In this case, load one sheet at a time.
*2 Normal feeding at maximum capacity may not be possible with some types of paper, or under very high or low temperature or humidity. In this case, load half the amount of paper or less.

Paper Load Limit of Paper Output Tray

Genuine Canon Paper

Paper for printing documents:

Media Name <Model No.>	Paper Output Tray
Canon Red Label Superior <WOP111> Canon Océ Office Colour Paper <SAT213>	Approx. 10 sheets

Paper other than Genuine Canon Paper

Common Name	Paper Output Tray
Plain Paper (including recycled paper)	Approx. 10 sheets

When continuing printing with paper other than the above, we recommend removing already printed paper from the paper output tray to avoid smearing or discoloration.

Unsupported Media Types

Do not use the following types of paper. Using such paper will cause not only unsatisfactory results, but also the printer to jam or malfunction.

- Folded, curled, or wrinkled paper
- Damp paper
- Paper thinner than a postcard, including plain paper or notepad paper cut to a small size (when printing on paper smaller than A5)
- Picture postcards
- Postcards affixed with photos or stickers
- Envelopes
- Any type of paper with holes
- Paper that is not rectangular
- Paper bound with staples or glue
- Paper with an adhesive surface on the back such as label seal
- Paper decorated with glitter, etc.

Handling Paper

- Be careful not to rub or scratch the surfaces of any types of paper when handling.
- Hold the paper as closely as possible to its edges and try not to touch the printing surface. The print quality may be degraded if the printing surface is smudged with sweat or oil that comes from your hands.
- Do not touch the printed surface until the ink is dried. Even when the ink is dried, be careful not to touch the printed surface as much as possible when handling. Due to the nature of the pigment ink, the ink on the printed surface may be removed when being rubbed or scratched.
- Take out only the necessary number of paper from the package, just before printing.
- To avoid curling, when you do not print, put unused paper back into the package and keep it on a level surface. And also, store it avoiding heat, humidity, and direct sunlight.

Printing

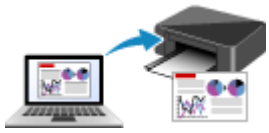

Printing from Computer

Printing from Smartphone/Tablet

Printing from Digital Camera

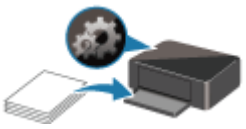

Paper Settings

Printing from Computer

- Printing from Application Software (Windows Printer Driver)
- Printing from Application Software (macOS AirPrint)
- Printing Using Canon Application Software
- Printing Using a Web Service

Printing from Application Software (macOS AirPrint)

- Printing Basic
- Adding Printer
- How to Open Printer Settings Screen
- Displaying the Printing Status Screen
- Deleting the Undesired Print Job
- Removing Printer That Is No Longer Required from List of Printers

Printing

This printer is compatible with the macOS standard printing system (AirPrint).
You can start printing right away after connecting this printer to your Mac without installing any special software.

Checking Your Environment

First, check your environment.

- AirPrint Operation Environment
  Mac running the latest version of OS
- Requirement
  The Mac and the printer must be connected by one of the following methods:
  - Connected to the same network over a **LAN**
  - Connected by USB

Print from a Mac

1. Check that printer is turned on

   Note

   - If **Auto power on** is enabled, printer automatically turns itself on when receiving a print job.

2. Load paper in printer

   Register the set paper size on the printer LCD monitor.
   The paper type will be set automatically according to the set paper size.

3. Start printing from your application software

   The Print dialog opens.

4. Select printer

   Select your model from the **Printer** list in the Print dialog.

Note

- Click **Show Details** to switch the setup window to the detailed display.

5. Check print settings

Set items such as **Paper Size** to the appropriate size, as well as **Paper Type** from **Media & Quality** of the pop-up menu.
Select **Auto Select** for **Paper Type**.

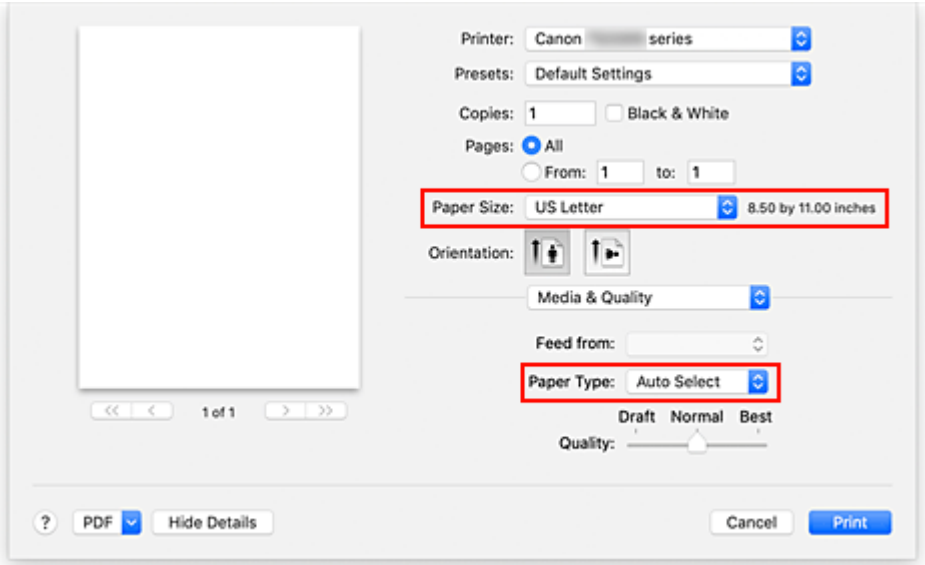

Important

- An error may occur if the paper size set in the print dialog is different from the paper size set on the printer. Select the correct items on the print dialog and the printer that correspond to the paper being printed.

Note

- Use the Print dialog to set general print settings such as the layout and the print sequence. For information about print settings, refer to macOS help.

6. Click **Print**

The printer prints according to the specified settings.

Note

- It can take the Wi-Fi a few minutes to get connected after the printer turns on. Print after checking that the printer is connected to the network.
- You cannot print if Bonjour settings of printer are disabled. Check **LAN** settings of printer and enable Bonjour settings.
- Refer to "Cannot Print Using AirPrint" for printing problems.
- The display of the settings screen may differ depending on the application software you are using.

Adding Printer

Procedure for adding printer to your Mac is explained.

To re-add a printer that was deleted, open **System Preferences** -> **Printers & Scanners**, click **+** next to the printer list, and then perform the procedure described below.

If your printer is connected via USB, and you connect the USB cable to a Mac, the printer is automatically added. The below procedure is not necessary in this case.

1. Check whether **Default** is selected in the displayed dialog

   Note

   - It may take a little time for the name of your printer to appear.

2. Select the printer

   Select the printer listed as **Bonjour Multifunction**.

   Note

   - Check the following if printer does not appear.
     - Printer is on
     - Firewall function of the security software is off
     - Printer is connected to the wireless router

3. Select **Secure AirPrint** from **Use**

4. Click **Add**

   The printer is added to your Mac.

How to Open Printer Settings Screen

The settings screen of the printer can be displayed from your application software.

Opening the Page Setup Dialog

Use this procedure to set the page (paper) settings before printing.

1. Select **Page Setup...** from the **File** menu of the application software

   The Page Setup dialog opens.

Opening the Print Dialog

Use this procedure to set the print settings before printing.

1. Select **Print...** from the **File** menu of the application software

   The Print dialog opens.

Displaying the Printing Status Screen

Check the print progress according to the following procedure:

1. Launch the printing status screen

   - If the print data has been sent to the printer

     The printing status screen opens automatically. To display the printing status screen, click the (the printer icon) displayed on the Dock.

   - If the print data has not been sent to the printer

     Open **System Preferences**, and select **Printers & Scanners**.

     To display the printing status screen, select the name of your printer model from the printer list, and then click **Open Print Queue...**.

2. Check the printing status

   You can check the name of the file being printed or ready for being printed.

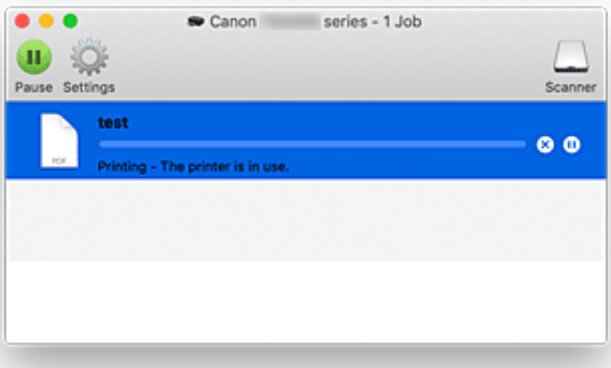

Deletes the specified print job.

Stops printing the specified document.

Resumes printing the specified document.

Stops printing all documents.

Displayed only when printing of all documents is being stopped, and resumes printing all documents.

Important

- If an error occurs, an error message will appear on the printing progress confirmation screen.
- The content of the error message may differ depending on the OS version.
- The printer part names in the error message may differ from what is listed in this manual.

- If the error message is difficult to understand, check the error code displayed on the LCD monitor of the printer, and check the corresponding support number.
  For details on error codes and support numbers, see "When Error Occurred".

Deleting the Undesired Print Job

If the printer does not start printing, canceled or failed print job data may be remaining.
Delete unnecessary print jobs from the print status check screen.

1. Open **System Preferences**, and select **Printers & Scanners**

2. Select your model, and then click **Open Print Queue...**

   The print status check screen appears.

3. Select the unnecessary print job and click (Delete)

   The selected print jobs will be deleted.

Removing Printer That Is No Longer Required from List of Printers

The printer that is no longer in use can be removed from the list of printers.
Before removing the printer, remove the cable connecting the printer and PC.

You cannot remove the printer if not logged in as the administrator. For information about an administrative user, see **Users & Groups** from **System Preferences**.

1. Open **System Preferences**, and select **Printers & Scanners**

2. Delete printer from list of printers

   Select the printer you wish to remove from the list of printers and click **-**.

   Click **Delete Printer** when the confirmation message appears.

Printing Using Canon Application Software

- **Easy-PhotoPrint Editor Guide**

Printing from Smartphone/Tablet

- Printing from iPhone/iPad/iPod touch (iOS)
- Printing from Smartphone/Tablet (Android)
- Printing from Windows 10 Mobile Device
- Printing/Scanning with Wireless Direct

Printing/Scanning with Wireless Direct

You can connect devices (e.g. computer, smartphone, or tablet) to the printer by two methods below.

- Wireless connection (connecting devices via a wireless router)
- Direct wireless connection (connecting devices using Wireless Direct)

This section describes Wireless Direct, which allows you to print or scan by connecting the devices to the printer directly.

Follow the procedure below to use Wireless Direct.

1. Preparing the printer.

   ➡ Enabling Wireless Direct of Printer

2. Preparing a device to connect to the printer.

   ➡ Changing Settings of a Device and Connecting It to the Printer

3. Printing/Scanning.

   ➡ Printing/Scanning with Wireless Direct

Important

- You can connect up to 5 devices to the printer at the same time.
- Check the usage restrictions and switch the printer to the Wireless Direct.

  ➡ Restrictions

Enabling Wireless Direct of Printer

1. Check that printer is turned on.

2. Press the **Direct** button.

The icon appears on the LCD.

The Wireless Direct is enabled and a device can be connected to the printer wirelessly.

Note

- To check the printer's MAC address and the current Wireless Direct settings, print out the network setting information.

  ➡ Printing Network Settings

Changing Settings of a Device and Connecting It to the Printer

1. Turn on Wi-Fi function on your device.

Enable "Wi-Fi" on your device's "Setting" menu.

For more on turning on Wi-Fi function, see your device's instruction manual.

2. Select "XXXXXX-TS3300series" ("X" represents alphanumeric characters) from list displayed on your device.

Note

- If "XXXXXX-TS3300series" does not appear on the list, Wireless Direct is not enabled.

  See Enabling Wireless Direct of Printer to enable Wireless Direct.

3. Enter password.

   Your device is connected to the printer.

Note

- You can check the password by printing the network settings from the printer.

  ➡ Printing Network Settings

- Depending on the device you are using, entering the password is required to connect a device to the printer via Wi-Fi. Enter the password specified for the printer.
- Depending on the security settings, you may not need to enter a password.

Printing/Scanning with Wireless Direct

After connecting a device and the printer, start printing/scanning from the application of your device.

Note

- For more on printing or scanning from a device via Wi-Fi, refer to the device's or application's instruction manual.
- You can print/scan from your smartphone or tablet by installing Canon PRINT Inkjet/SELPHY. Download it from App Store and Google Play.

  ➡ For iOS
  ➡ For Android

Paper Settings

By registering the paper size of paper loaded on the rear tray, you can prevent the printer from misprinting by displaying the error code before printing starts when the paper size of the loaded paper differs from the print settings.

Note

- The default display setting is different between when you print from the PictBridge (Wi-Fi) compliant device, the smartphone, or the tablet and when you print from the computer.

  ➡ Default Setting for Displaying the Error Code which Prevents Misprinting

Media type is set depending on the paper size specified on the LCD.

Paper size	Media type
A4, **LTR**, **LGL**, **B5**, **A5**	Plain paper
KG 4"x6"/10x15cm, **L**, **2L 5"x7"/13x18cm**, **5"x5"/13x13cm**	Photo paper
Hide	Other

After loading paper:

- **When you load paper on the rear tray:**

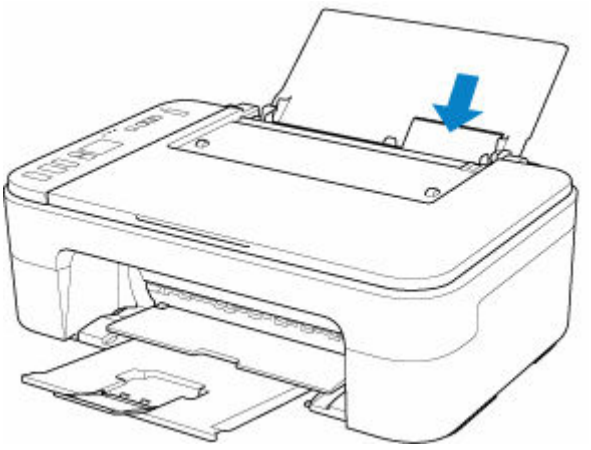

The paper status icon and the current paper size appear.

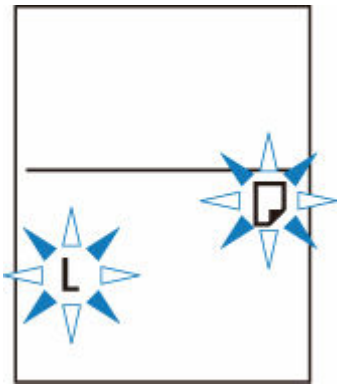

Register the paper size according to the loaded paper.

When the paper size setting for printing is different from the paper size setting set to the printer:

Ex:

- Paper size setting for printing: A5
- Paper size setting set to the printer: A4

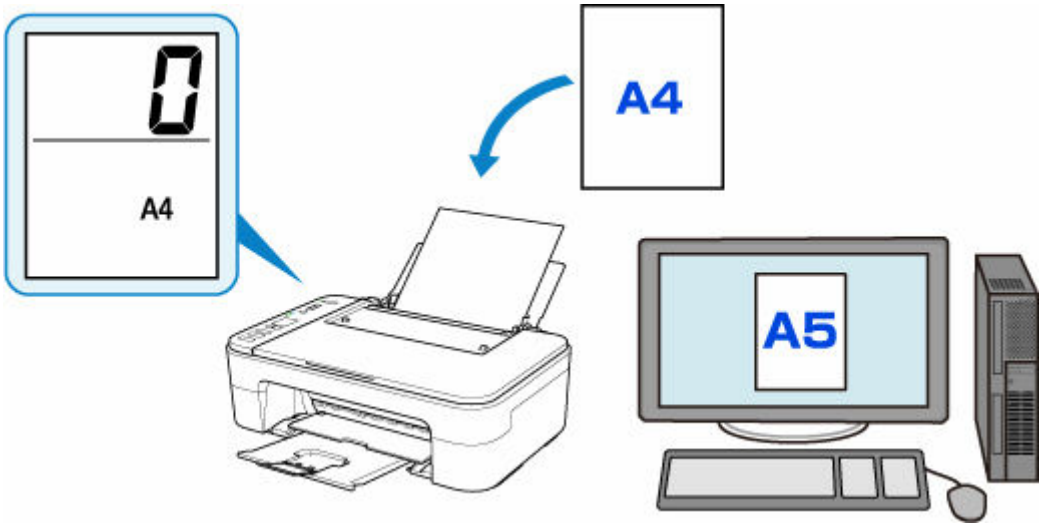

When you start printing, an error code appears on the LCD.

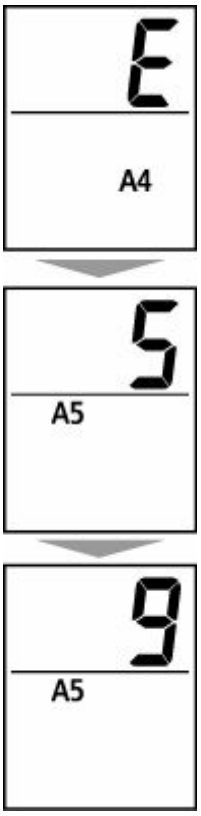

Select one of the operations below.

Printing by paper size setting for printing

You print on the paper loaded without changing the paper size setting. Press the **Color** button or the **Black** button.

For example, when the paper size setting for printing is A5 and the paper size setting set to A4 on the LCD, the printer starts printing with A5 on the paper loaded.

Printing after replacing paper

You print after replacing paper loaded on the rear tray.

For example, when the paper size setting for printing is A5 and the paper size setting set to A4 on the LCD, you load A5 sized paper before you start printing.

Set the paper size setting on the LCD depending on the loaded paper on the rear tray after replacing paper.

Cancel printing

Press the **Stop** button to cancel printing and change the paper size setting specified for printing. Try printing again.

Default Setting for Displaying the Error Code which Prevents Misprinting

- **When you print from the PictBridge (Wi-Fi) compliant device, the smartphone, or the tablet:**

  The error code which prevents misprinting is enabled by default.

  To change the setting:

  1. Press the **Setup** button until **15** appears on the LCD.
  2. Press the **Black** button or the **Color** button.

     Press the **Color** button to enable the error code display, or the **Black** button to disable the error code display.

- **When you print from Windows:**

  The error code which prevents misprinting is disabled by default.

  To change the setting:

  ➡ Changing the Printer Operation Mode

- **When you print from macOS:**

  The error code which prevents misprinting is enabled by default.

  To change the setting:

  ➡ Changing the Printer Operation Mode

Important

- When the error code which prevents misprinting is disabled:

  The printer starts printing even though the paper size setting for printing and the paper size setting set to the printer are different.

Copying

Making Copies on Plain Paper Basics

Copying on Photo Paper

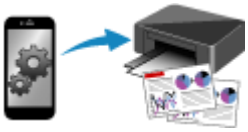

Copying Using Smartphone or Tablet

Making Copies on Plain Paper

Load the original on the platen to copy on the A4, Letter, B5, or A5 sized plain paper.

1. Check that printer is turned on.

2. Load paper.

   Load A4, Letter, B5, or A5 sized plain paper.

   Select **A4**, **LTR**, **B5**, or **A5** size for paper size setting on the LCD.

3. Load the original on the platen.

4. Press the **Black** button or the **Color** button.

   The segment display on the LCD flashes.

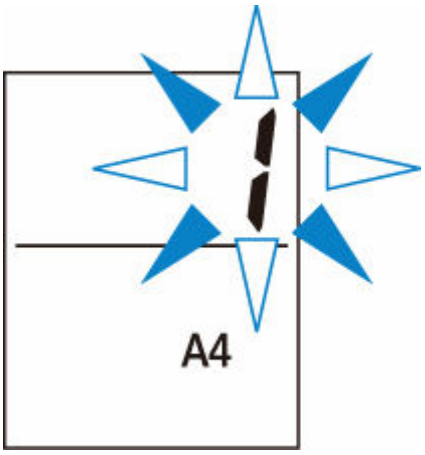

   When the segment display changes from flashing to lit, the printer starts copying.

   Remove the original on the platen after copying is complete.

   - **To make multiple copies**

     Press the **Color** button or the **Black** button repeatedly according to the number of copies you want during the segment display flashes.

     Press the same button (**Color** button or **Black** button) as the one which you previously pressed.

   - **To cancel copying**

     Press the **Stop** button.

Important

- Do not open the document cover or remove the original from the platen until scanning is completed.

  While the printer is scanning the original, the **ON** lamp keeps flashing.

- If the paper size setting on the LCD is other than A4, LTR, B5, or A5, the printer performs the photo copying.

  ➡ Copying on Photo Paper

- If you press the **Color** button or the **Black** button when the paper size is not selected on the LCD, an error code appears on the LCD.

  ➡ When Error Occurred

Note

- The original is copied at the same magnification on plain paper. The original is copied on plain paper with borders.

Print Quality

For the print quality of copying, you can select either "Standard" mode or "Draft" mode (speed priority).

"Standard" mode

The quality is given priority over print speed.

Press the **Color** or **Black** button for less than 2 seconds in step 4.

"Draft" mode

The print speed is given priority over quality.

Press and hold down the **Color** or **Black** button for 2 or more seconds in step 4.

Copying on Photo Paper

Load the original on the platen to copy on the KG/10x15cm(4x6), 13x18cm(5x7), or Square size (127x127mm) photo paper.

1. Check that printer is turned on.

2. Load paper.

   Load KG/10x15cm(4x6), 13x18cm(5x7), or Square size (127x127mm) photo paper.

   Select **KG 4"x6"/10x15cm**, **2L 5"x7"/13x18cm**, or **5"x5"/13x13cm** size for paper size setting on the LCD.

3. Load the original on the platen.

4. Press the **Black** button or the **Color** button.

   The segment display on the LCD flashes.

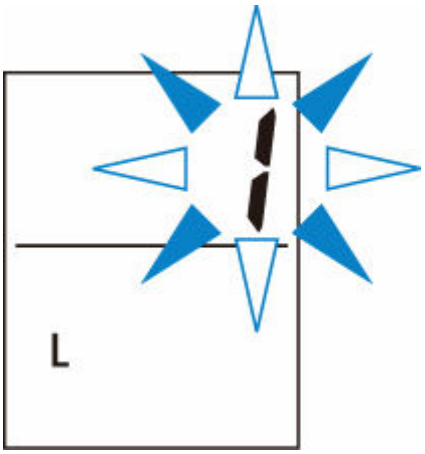

   When the segment display changes from flashing to lit, the printer starts copying.

   Remove the original on the platen after copying is complete.

   - **To make multiple copies**

     Press the **Color** button or the **Black** button repeatedly according to the number of copies you want during the segment display flashes.

     Press the same button (**Color** button or **Black** button) as the one which you previously pressed.

   - **To cancel copying**

     Press the **Stop** button.

Important

- Do not open the document cover or remove the original from the platen until scanning is completed.

  While the printer is scanning the original, the **ON** lamp keeps flashing.

- If you press the **Color** button or the **Black** button when the paper size is not selected on the LCD, an error code appears on the LCD.

➡ When Error Occurred

Note

- The original is copied automatically by reducing/enlarging to fit the paper size of photo paper. The original is copied on photo paper without borders.
- If you copy the rectangular original on the square size paper, it will be copied with missing the top and bottom edges or the left and right edges.

Scanning

Scanning from Computer (Windows)

Scanning from Computer (macOS)

Scanning from Computer (macOS)

- **Scanning According to Item Type or Purpose (IJ Scan Utility Lite)**
  - IJ Scan Utility Lite Features
  - Scanning Easily (Auto Scan) **Basics**
  - Scanning Documents and Photos
- **Scanning Tips**
  - Positioning Originals (Scanning from Computer)

Scanning According to Item Type or Purpose (IJ Scan Utility Lite)

- IJ Scan Utility Lite Features
- Scanning Easily (Auto Scan) Basics
- Scanning Documents and Photos

Important

- Available functions and settings vary depending on your scanner or printer.

IJ Scan Utility Lite Features

Use IJ Scan Utility Lite to scan and save documents, photos, or other items at one time by simply clicking the corresponding icon.

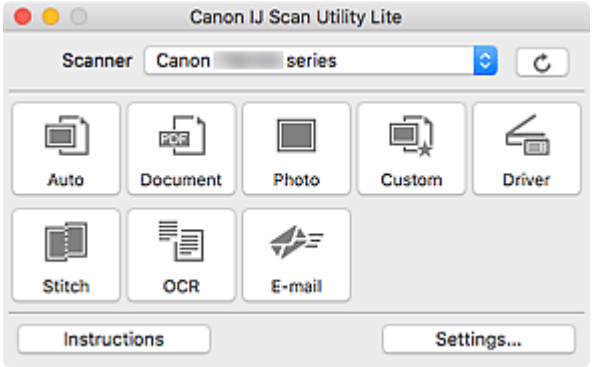

Important

- The displayed items and available functions vary depending on your scanner or printer.

Multiple Scanning Modes

Auto allows for one click scanning with default settings for various items. **Document** will sharpen text in a document or magazine for better readability, and **Photo** is best suited for scanning photos.

Note

- For details on the IJ Scan Utility Lite main screen, see IJ Scan Utility Lite Main Screen.

Save Scanned Images Automatically

Scanned images are automatically saved to a preset folder. The folder can be changed as needed.

Note

- The default save folder is the **Pictures** folder.
- For how to specify a folder, see Settings Dialog.

Application Integration

Scanned images can be sent to other applications. For example, display scanned images in your favorite graphics application, attach them to e-mails, or extract text from images.

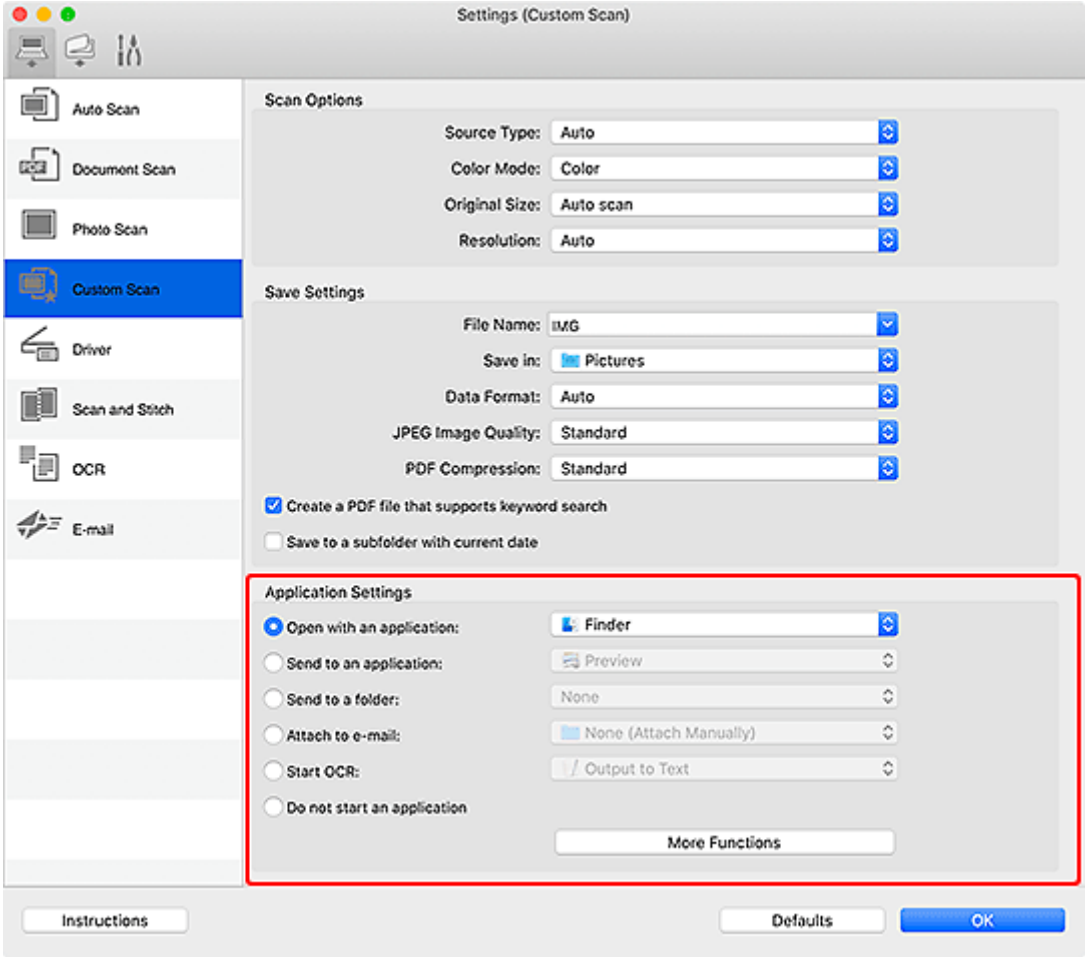

Note

- To set the applications to integrate with, see Settings Dialog.

Scanning Easily (Auto Scan)

Auto Scan allows for automatic detection of the type of the item placed on the platen or ADF (Auto Document Feeder).

Important

- This function is not supported depending on your model.
- The following types of items may not be scanned correctly. In that case, adjust the cropping frames (selection boxes; scan areas) in the screen displayed by clicking **Driver** in the IJ Scan Utility Lite main screen, and then scan again.
  - Photos with a whitish background
  - Items printed on white paper, hand-written text, business cards, and other unclear items
  - Thin items
  - Thick items
- When scanning two or more documents from the ADF, place documents of the same size.

1. Check that scanner or printer is turned on.

2. Place items on platen or ADF.

   ➡ Positioning Originals (Scanning from Computer)

3. Start IJ Scan Utility Lite.

4. Click **Auto**.

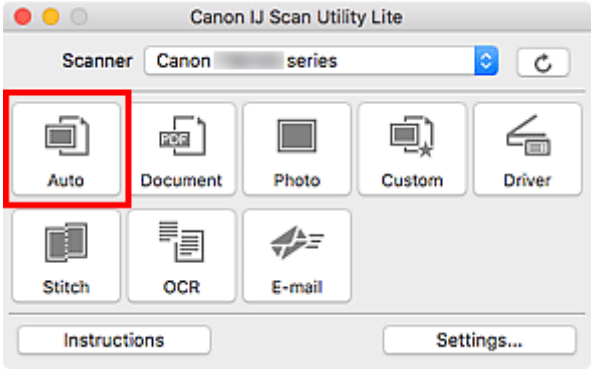

   Scanning starts.

Note

- To cancel the scan, click **Cancel**.
- Use the **Settings (Auto Scan)** dialog to set where to save the scanned images and to make advanced scan settings.
- To scan a specific item type, see the following pages.

  ➡ Scanning Documents and Photos
  ➡ Scanning with Favorite Settings

➡ Scanning Multiple Documents at One Time from the ADF (Auto Document Feeder)

Scanning Documents and Photos

Scan items placed on the platen with settings suitable for documents or photos.

Save documents in formats such as PDF and JPEG, and photos in formats such as JPEG and TIFF.

1. Place the item on the platen.

   ➡ Positioning Originals (Scanning from Computer)

2. Start IJ Scan Utility Lite.

3. To specify the paper size, resolution, PDF settings, etc., click **Settings...**, and then set each item in the Settings dialog.

   Note

   - Once settings are made in the Settings dialog, the same settings can be used for scanning from the next time.
   - In the Settings dialog, specify image processing settings such as slant correction, set where to save the scanned images, and more, as needed.

   When setting is completed, click **OK**.

4. Click **Document** or **Photo**.

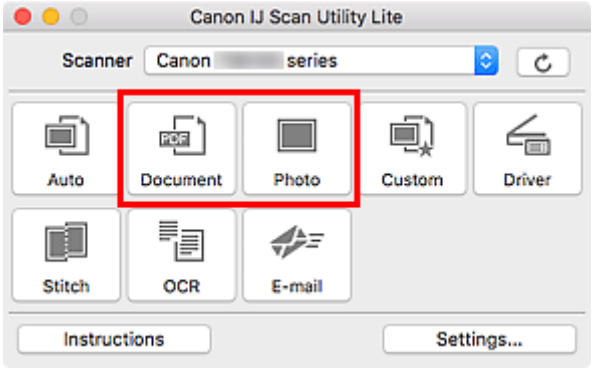

   Scanning starts.

Note

- To cancel the scan, click **Cancel**.

Scanning Tips

- Positioning Originals (Scanning from Computer)

Positioning Originals (Scanning from Computer)

This section describes how to load originals on the platen or ADF (Auto Document Feeder) for scanning. If items are not placed correctly they may not be scanned correctly.

Important

- Be sure to observe the following when loading the original on the platen. Failure to observe the following may cause the scanner to malfunction or the platen glass to break.
  - Do not place any objects weighing 4.4 lb (2.0 kg) or more on the platen glass.
  - Do not put any pressure of 4.4 lb (2.0 kg) or more on the platen glass, such as pressing down the original.
- Close the document cover when scanning.
- Do not touch the operation panel buttons or LCD (Liquid Crystal Display) when opening/closing the document cover. May result in unintended operation.
- When using a personal scanner in the upright position, the item type may not be detected automatically. In that case, specify the item type in IJ Scan Utility and scan.

➡ Placing Items (Platen)
➡ Placing Documents (ADF (Auto Document Feeder))
➡ Placing Items (When Using Stand)

Placing Items (Platen)

Place items as described below to scan by detecting the item type and size automatically.

Important

- Depending on your model, the function to scan by automatically detecting the item type and size does not appear.
- When scanning by specifying the paper size, align an upper corner of the item with the corner at the arrow (alignment mark) of the platen.
- Photos that have been cut to irregular shapes and items smaller than 1.2 inches (3 cm) square cannot be cropped accurately when scanning.
- Reflective disc labels may not be scanned as expected.
- If scanned by detecting the item type and size automatically, the response may differ. In that case, adjust the cropping frame (selection box) manually.

Photos, Postcards, Business Cards, and BD/DVD/CD	Magazines, Newspapers, and Documents
	 Place the item face-down on the platen and align an upper corner of the item with the corner at the arrow (alignment mark) of the platen.

Single item:

Place the item face-down on the platen, with 0.4 inch (1 cm) or more space between the edges (diagonally striped area) of the platen and the item. Portions placed on the diagonally striped area cannot be scanned.

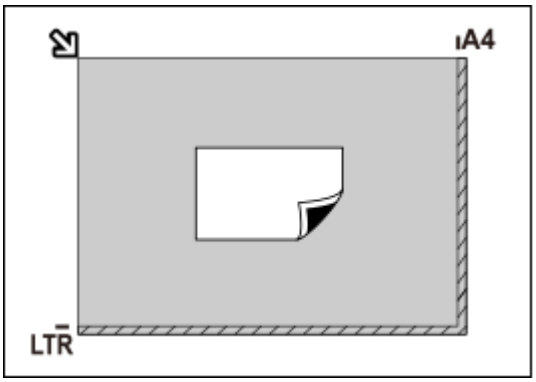

Important

- Large items (such as A4 size photos) that cannot be placed away from the edges/arrow (alignment mark) of the platen may be saved as PDF files. To save in a format other than PDF, scan by specifying the data format.

Multiple items:

Allow 0.4 inch (1 cm) or more space between the edges (diagonally striped area) of the platen and items, and between items. Portions placed on the diagonally striped area cannot be scanned.

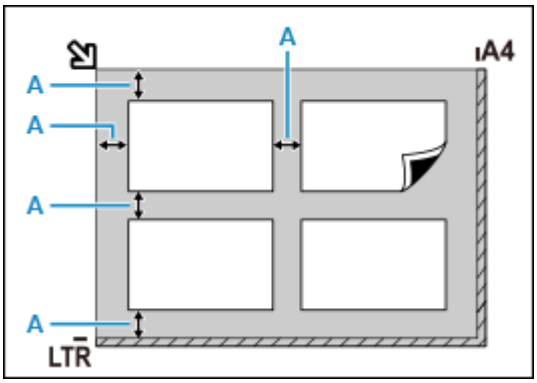

A : 0.4 inch (1 cm) or more

Note

- In IJ Scan Utility Lite, place up to 12 items.
- Positions of slanted items (10 degrees or less) are corrected automatically.

Portions placed on the diagonally striped area cannot be scanned.

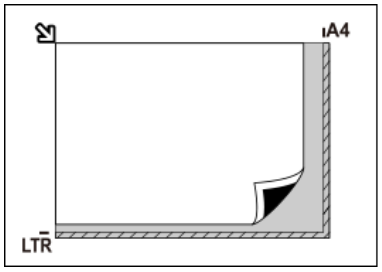

Important

- **Inkjet All-In-One printer:**

  For the portions in which items cannot be scanned, click Home to return to the top page of the Online Manual for your model and search for "Loading Originals."

- **Personal scanner:**

  For the portions in which items cannot be scanned, click Home to return to the top page of the Online Manual for your model and search for "Items You Can Place & How to Place Items."

Placing Documents (ADF (Auto Document Feeder))

Important

- Do not leave thick items on the platen when scanning from the ADF. May result in paper jam.
- Place and align documents of the same size when scanning two or more documents.
- For supported document sizes when scanning from the ADF, click Home to return to the top page of the Online Manual for your model and search for "Supported Originals."

1. Make sure any original has been removed from platen.

2. Open document tray (A).

3. Slide the paper guides (B) all the way out.

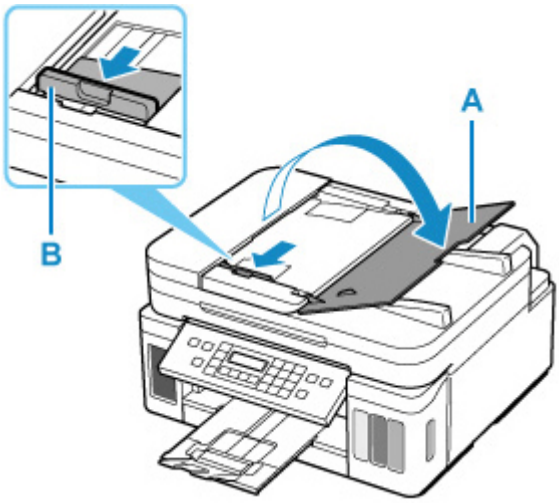

4. Load document with side to scan facing up in document tray.

   Insert the document until it stops.

5. Adjust document guide (B) to match width of document.

   Do not slide the document guide too hard against the document. The document may not be fed properly.

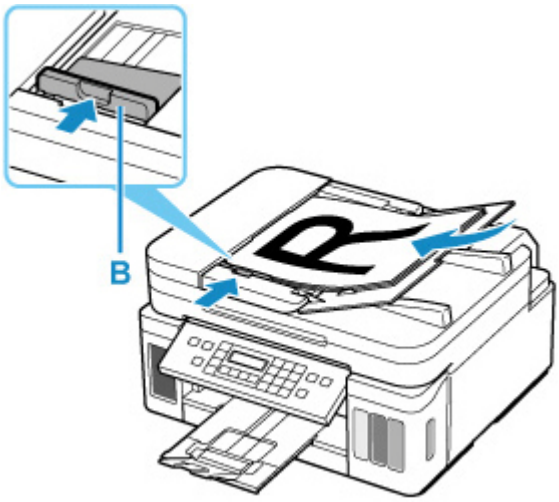

Note

- When scanning duplex documents, place the front sides facing up. They will not be scanned correctly if placed the other way around.

Placing Items (When Using Stand)

1. Place item on platen.

    1. Open the document cover.

    2. Place the item with the side to scan facing the platen, and then align it with the alignment mark.

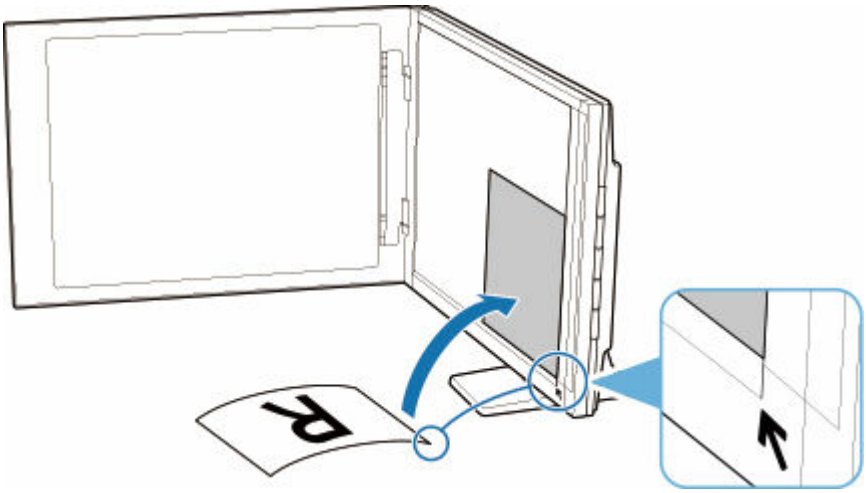

Important

- If you open the document cover wide, the scanner may fall over.
- Portions placed over (A) (0.094 inch (2.4 mm) from the left edge of the platen) or (B) (0.106 inch (2.7 mm) from the front edge) cannot be scanned.

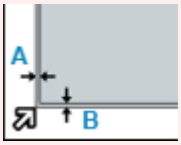

2. Gently close document cover.

While scanning, hold the document cover gently with your hand to keep it closed.

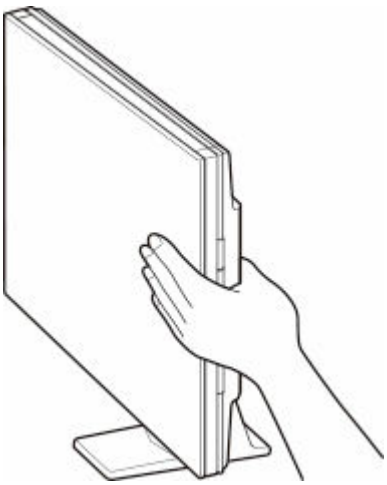

Important

- Keep these points in mind when using the scanner in the upright position.
  - Do not subject the scanner to vibration during operation. The correct image results may not be obtained (for example, images may blur).
  - The item type may not be detected automatically. In that case, specify the item type in IJ Scan Utility and scan.

Frequently Asked Questions

Network

- Cannot Find Printer on Network
- Cannot Find Printer while Using Wi-Fi
- Network Key (Password) Unknown
- Cannot Print or Connect

For other questions about network, click here.

Print

- Printer Does Not Print
- Printouts Are Blank/Blurry or Fuzzy/Inaccurate or Bleeding Colors/Streaks or Lines
- Printout Results Are Unsatisfactory
- List of Support Code for Error (Paper Jams)
- Cannot Print or Connect

Installation

- Failed to MP Drivers Installation (Windows)

Error

- When Error Occurred
- Message (Support Code) Appears

Solve Problems

Printer Does Not Work

- Printer Does Not Turn On
- Printer Turns Off Unexpectedly or Repeatedly
- LCD Is Off
- USB Connection Problems
- Cannot Communicate with Printer via USB

- Printer Does Not Print
- Copying/Printing Stops
- Cannot Print Using AirPrint
- Printer Prints Slowly
- Ink Does Not Come Out
- List of Support Code for Error (Paper Jams)
- Printer Does Not Pick up or Feed the Paper/"No Paper" Error
- Printout Results Are Unsatisfactory

- Scanning Problems (Windows)
- Scanning Problems (macOS)
- Scan Results Are Unsatisfactory (Windows)

- Scan Results Are Unsatisfactory (macOS)
- Cannot Print/Scan from Smartphone/Tablet

Cannot Set Correctly (Network)

- Cannot Find Printer on Check Printer Settings Screen During Setup (Windows)
- Cannot Find Printer while Using Wi-Fi
- Printer Suddenly Stopped Working for Some Reason
- Network Key (Password) Unknown
- Forgot Administrator Password of Printer
- Printer Cannot Be Used After Replacing Wireless Router or Changed Router Settings
- Message Appears on Computer During Setup
- Checking Network Information
- Restoring to Factory Defaults

Cannot Set Correctly (Installation)

- Failed to MP Drivers Installation (Windows)
- Updating MP Drivers in Network Environment (Windows)

Error or Message Appears

- When Error Occurred
- Message (Support Code) Appears
- List of Support Code for Error
- Error Message Appears on PictBridge (Wi-Fi) Compliant Device
- IJ Scan Utility Error Messages (Windows)
- IJ Scan Utility Lite Error Messages (macOS)
- ScanGear (Scanner Driver) Error Messages (Windows)

Operation Problems

- Network Communication Problems
- Printing Problems
- Problems while Printing/Scanning from Smartphone/Tablet
- Scanning Problems (Windows)
- Scanning Problems (macOS)
- Mechanical Problems
- Installation and Download Problems
- Errors and Messages
- If You Cannot Solve a Problem

Network Settings and Common Problems

Here are frequently asked questions on network. Select a connection method you are using, or you want to use.

Wireless LAN

Cannot Find Printer

- Cannot Find Printer while Using Wi-Fi
- Cannot Find Printer on Check Printer Settings Screen During Setup (Windows)
- Cannot Proceed beyond Printer Connection Screen
- Printer is Not Found by Printer Find Screen of Setup
- Searching Printer by IP Address or Host Name During Setup
- Error Occurs During Wi-Fi Setup
- Detect Same Printer Name
- Reconfiguration Method of Wi-Fi Connection

Cannot Print or Connect

- Printer Suddenly Stopped Working for Some Reason
- Printer Cannot Be Used After Replacing Wireless Router or Changed Router Settings
- Cannot Access to Internet on Wi-Fi from Communication Device
- Connecting Printer and Wireless Router Using Easy wireless connect
- Cannot Connect Smartphone/Tablet to Wireless Router
- Error Occurs During Wi-Fi Setup
- Connects to Another Computer via LAN/Changes from USB to LAN Connection
- Cannot Print or Connect

LAN Setting Tips/Changing LAN Settings

- Network Key (Password) Unknown
- Forgot Administrator Password of Printer
- Checking Network Information
- Restoring to Factory Defaults
- Checking Wireless Router SSID/Key
- Checking Wireless Router Network Name (SSID) for Smartphone/Tablet
- Privacy Separator/SSID Separator/Network Separation Function
- Default Network Settings
- Connects to Another Computer via LAN/Changes from USB to LAN Connection
- Printing Network Settings
- Reconfiguration Method of Wi-Fi Connection
- Checking Status Code

Printing/Scanning from Smartphone/Tablet

- Connecting Printer and Wireless Router Using Easy wireless connect
- Cannot Connect Smartphone/Tablet to Wireless Router
- Checking Wireless Router Network Name (SSID) for Smartphone/Tablet
- Setting Up Using Smartphone/Tablet
- Cannot Print/Scan from Smartphone/Tablet
- Downloading Canon PRINT Inkjet/SELPHY

Problems while Using Printer

- Message Appears on Computer During Setup
- Printer Prints Slowly
- No Ink Level Appears in Printer Status Monitor (Windows)
- Packets Are Sent Constantly (Windows)

Wireless Direct

Cannot Print or Connect

- Printer Suddenly Stopped Working for Some Reason
- Cannot Access to Internet on Wi-Fi from Communication Device
- Cannot Print or Connect

LAN Setting Tips/Changing LAN Settings

- Network Key (Password) Unknown
- Forgot Administrator Password of Printer
- Checking Network Information
- Restoring to Factory Defaults
- Default Network Settings
- Printing Network Settings
- Reconfiguration Method of Wi-Fi Connection
- Checking Status Code

Printing from Smartphone/Tablet

- Cannot Print/Scan from Smartphone/Tablet
- Downloading Canon PRINT Inkjet/SELPHY

Problems while Using Printer

- Message Appears on Computer During Setup
- Printer Prints Slowly
- No Ink Level Appears in Printer Status Monitor (Windows)

Network Communication Problems

- Cannot Find Printer on Network
- Network Connection Problems
- Other Network Problems

Cannot Find Printer on Network

While performing printer setup:

- Cannot Find Printer on Check Printer Settings Screen During Setup (Windows)
- Cannot Proceed beyond Printer Connection Screen

While using printer:

- Cannot Find Printer while Using Wi-Fi

Cannot Find Printer on Check Printer Settings Screen During Setup (Windows)

If the printer cannot be found and the **Check Printer Settings** screen appears after searching the printer by **Automatic search** on the **Search for Printers** screen during driver setup, click **Redetect** and search for the printer again by the IP address on the **Search for Printers** screen.

If the printer has not been found after searching it by the IP address, check network settings.

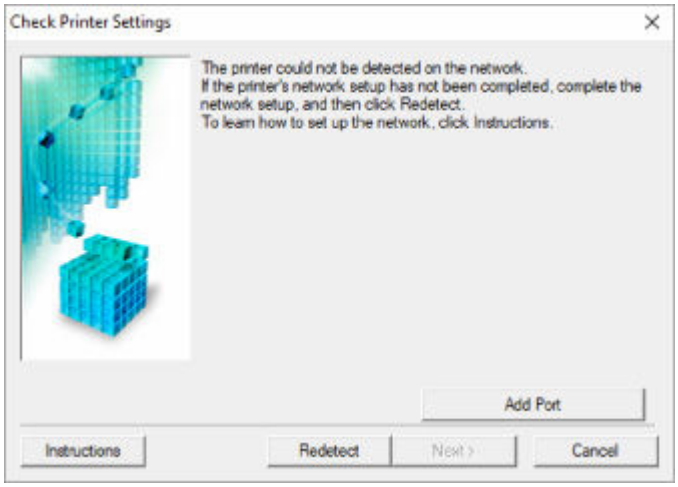

- Checking Power Status
- Checking PC Network Connection
- Checking Printer's Wi-Fi Settings
- Checking Wi-Fi Environment
- Checking Printer's IP Address
- Checking Security Software Settings
- Checking Wireless Router Settings

Cannot Find Printer on Check Printer Settings Screen During Wi-Fi Setup (Windows)-Checking Power Status

Are printer and network device (router, etc.) turned on?

Make sure the printer is turned on.

➡ Checking that Power Is On

Make sure network device (router, etc.) is turned on.

If printer or network device is off:

Turn on printer or network device.

It may take a while for the printer and network device to become ready for use once they are turned on. Wait a while after turning on the printer or network device, and then click **Redetect** on the **Check Printer Settings** screen to redetect the printer.

If the printer is found, follow the instructions on the screen to continue to set up network communication.

If printer and network device are on:

If the network devices are on, turn them off and on again.

If above does not solve the problem:

➡ Checking PC Network Connection

Cannot Find Printer on Check Printer Settings Screen During Wi-Fi Setup (Windows)-Checking PC Network Connection

Can you view any web pages on your computer?

Make sure the computer and network device (router, etc.) are configured and the computer is connected to the network.

If you cannot view any web pages:

Click **Cancel** on the **Check Printer Settings** screen to cancel to set up the network communication.

After that, configure the computer and network device.

For the procedures, refer to the instruction manuals supplied with the computer and network device, or contact their manufacturers.

If you can view web pages after configuring the computer and network device, try to set up the network communication from the beginning.

If you can view web pages, or if above does not solve the problem:

➡ Checking Printer's Wi-Fi Settings

Cannot Find Printer on Check Printer Settings Screen During Wi-Fi Setup (Windows)-Checking Printer's Wi-Fi Settings

Is printer set to allow wireless communication?

Make sure the icon is displayed on the LCD.

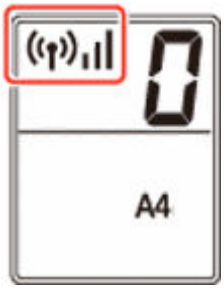

If icon is not displayed:

The printer is not set to allow wireless communication. Turn on wireless communication on the printer.

If icon is displayed:

➡ Checking Wi-Fi Environment

Cannot Find Printer on Check Printer Settings Screen During Wi-Fi Setup (Windows)-Checking Wi-Fi Environment

Is the printer connected to the wireless router?

Check the status of the icon on the LCD to make sure the printer is connected to the wireless router.

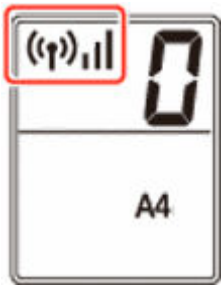

If is displayed:

- Check wireless router configuration.

  After checking the wireless router setting, make sure the printer is not placed far away from the wireless router.

  The printer can be up to 50 m (164 ft) from the wireless router indoors. Make sure the printer is close enough to the wireless router to be used.

  Place the printer and wireless router where there are no obstacles between them. Wireless communication between different rooms or floors is generally poor. Wireless communication can be impeded by building materials containing metal or concrete. If the printer cannot communicate with the computer over a Wi-Fi due to a wall, place the printer and the computer in the same room.

  In addition, if a device like a microwave oven that emits radio waves of the same frequency bandwidth as a wireless router is nearby, it may cause interference. Place the wireless router as far away from interference sources as possible.

  Note

  - Though an antenna is attached to most wireless routers, note that some of them have it inside.

- Check wireless router setting.

  The printer and wireless router should be connected using 2.4 GHz bandwidth. Make sure the wireless router for the printer's destination is configured to use 2.4 GHz bandwidth.

Important

- Note that some wireless routers distinguish network names (SSIDs) by the last alphanumeric character according to their bandwidth (2.4 GHz or 5 GHz) or purpose (for computer or game machine).

To check the network name (SSID) of the wireless router the printer is connected to, print the network settings.

➡ Printing Network Settings

For details, see the instruction manual supplied with the wireless router or contact the manufacturer.

After taking measures above, click **Redetect** on the **Check Printer Settings** screen to redetect the printer.

If the printer is found, follow the instructions on the screen to continue to set up network communication.

If the printer cannot be detected, the printer is not connected to the wireless router. Connect the printer to the wireless router.

After connecting the printer to the wireless router, set up the network communication from the beginning.

If , , or is displayed:

➡ Checking Printer's IP Address

Cannot Find Printer on Check Printer Settings Screen During Wi-Fi Setup (Windows)-Checking Printer's IP Address

Is printer's IP address specified correctly?

If printer's IP address is not specified correctly, the printer may not be found. Make sure whether printer's IP address is not used for another device.

To check the printer's IP address, print out the network settings information.

➡ Printing Network Settings

If the IP address is not specified correctly:

See If an error screen appears: and specify the IP address.

If the IP address is specified correctly:

➡ Checking Security Software Settings

Cannot Find Printer on Check Printer Settings Screen During Wi-Fi Setup (Windows)-Checking Security Software Settings

Make sure the firewall does not interfere with setup.

The firewall of your security software or operation system for computer may limit communication between the printer and your computer.

- **If a firewall message appears:**

  If a firewall message appears warning that Canon software is attempting to access the network, set the security software to allow access.

  After allowing the software to access, click **Redetect** on the **Check Printer Settings** screen to redetect the printer.

  If the printer is found, follow the instructions on the screen to continue to set up network communication.

- **If no firewall message appears:**

  Temporarily disable the firewall and redo the network communication setup.

  After the setup is complete, re-enable the firewall.

Note

- For more on firewall settings of your operating system or security software, see instruction manual or contact its manufacturer.

If above does not solve the problem:

➡ Checking Wireless Router Settings

Cannot Find Printer on Check Printer Settings Screen During Wi-Fi Setup (Windows)-Checking Wireless Router Settings

Check wireless router settings.

Check wireless router network connection settings, such as IP address filtering, MAC address filtering, encryption key, and DHCP function.

Make sure the same radio channel is assigned to the printer and the wireless router.

To check the settings of the wireless router, see the instruction manual supplied with the wireless router or contact the manufacturer.

In addition, make sure the wireless router you are using is configured to use 2.4 GHz bandwidth.

Important

- Depending on the wireless router, note that different network name (SSID) is assigned for a bandwidth (2.4 GHz or 5 GHz) or its usage (for PC or game machine) using alphanumeric characters at the end of network name (SSID).

After checking the wireless router settings, click **Redetect** on the **Check Printer Settings** screen to redetect the printer.

If the printer is found, follow the instructions on the screen to continue to set up network communication.

Cannot Proceed beyond Printer Connection Screen

If you cannot proceed beyond the **Printer Connection** screen, check the following.

Check1 Make sure USB cable is securely plugged in to printer and computer.

Connect the printer and the computer using a USB cable as the illustration below. The USB port is located at the back of the printer.

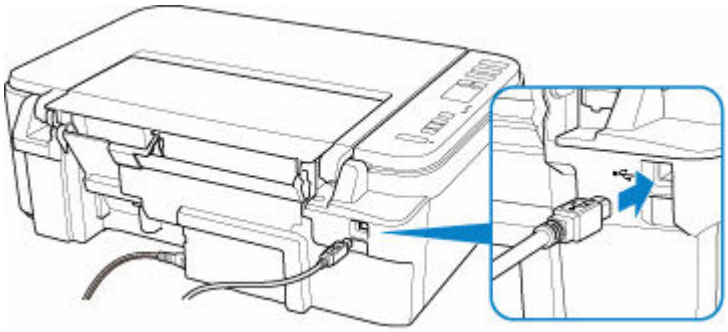

Important

- Connect the "Type-B" terminal to the printer with the notched side facing UP. For details, refer to the instruction manual supplied with the USB cable.

Check2 Follow procedure below to connect printer and computer again.

Important

- For macOS, make sure the lock icon is on the lower left of the **Printers & Scanners** screen.

  If the icon (locked) is displayed, click the icon to unlock. (The administrator name and the password are necessary to unlock.)

1. Unplug USB cable from printer and computer and connect it again.
2. Make sure no printer operation is in progress and turn off.
3. Turn on printer.

Check3 If you cannot resolve problem, follow procedure below to reinstall printer driver.

1. Finish setup.
2. Turn off printer.

3. Restart computer.

4. Make sure you have no application software running.

5. Click here and perform setup.

Cannot Find Printer while Using Wi-Fi

Check1 Make sure printer is turned on.

If not, make sure the printer is securely plugged in and press **ON** button to turn on.

The **ON** lamp flashes while the printer is initializing. Wait until the **ON** lamp stops flashing and remains lit.

Check2 Check the (**Network status**) icon on LCD.

If the icon is not displayed, press the **Network** button to enable wireless LAN.

If the icon is displayed, see Check 3 or later checking items to make sure whether printer setup is complete or the settings of wireless router to connect are correct.

Check3 Make sure printer setup is complete on the computer.

If it is not, click here and perform setup.

Note

- IJ Network Device Setup Utility allows you to diagnose and repair the network status.

  Select the link below to download IJ Network Device Setup Utility and install it.

  ➡ Checking Printer Connection Status Using IJ Network Device Setup Utility

  See below for starting up IJ Network Device Setup Utility.

  - **For Windows:**

    ➡ Starting Up IJ Network Device Setup Utility

  - **For macOS:**

    ➡ Starting Up IJ Network Device Setup Utility

Check4 Make sure printer and wireless router network settings match.

Make sure the network settings of the printer (e.g. network name (SSID) or network key (password), etc.) are identical with those of the wireless router.

To check the settings of the wireless router, refer to the instruction manual provided with it or contact its manufacturer.

Note

- Use 2.4 GHz frequency band to connect to a wireless router. Match the network name (SSID) set for the printer with that for 2.4 GHz frequency band of the wireless router.

To check the network name (SSID) set for the printer, print out the network setting information.

➡ Printing Network Settings

Note

- IJ Network Device Setup Utility allows you to diagnose and repair the network status.

  Select the link below to download IJ Network Device Setup Utility and install it.

  ➡ Checking Printer Connection Status Using IJ Network Device Setup Utility

  See below for starting up IJ Network Device Setup Utility.

  – **For Windows:**

    ➡ Starting Up IJ Network Device Setup Utility

  – **For macOS:**

    ➡ Starting Up IJ Network Device Setup Utility

Check5 Make sure the printer is not placed too far away from the wireless router.

If the distance between the printer and wireless router is too far, wireless communication becomes poor. Place the printer and wireless router close to each other.

Note

- Though an antenna is attached to most wireless routers, note that some of them have it inside.

Check6 Make sure wireless signal is strong. Monitor signal strength and move printer and wireless router as necessary.

Place the printer and wireless router where there are no obstacles between them. Wireless communication between different rooms or floors is generally poor. Wireless communication can be impeded by building materials containing metal or concrete. If the printer cannot communicate with the computer over a Wi-Fi due to a wall, place the printer and the computer in the same room.

In addition, if a device like a microwave oven that emits radio waves of the same frequency bandwidth as a wireless router is nearby, it may cause interference. Place the wireless router as far away from interference sources as possible.

Check the signal strength on the LCD.

➡ Indication of LCD

Note

- IJ Network Device Setup Utility allows you to diagnose and repair the network status.

  Select the link below to download IJ Network Device Setup Utility and install it.

  ➡ Checking Printer Connection Status Using IJ Network Device Setup Utility

  See below for starting up IJ Network Device Setup Utility.

  – **For Windows:**

    ➡ Starting Up IJ Network Device Setup Utility

– **For macOS:**

➡ Starting Up IJ Network Device Setup Utility

Check7 Make sure the computer is connected to the wireless router.

For more on how to check the computer settings or connection status, see your computer instruction manual or contact its manufacturer.

Note

- If you use a smartphone or tablet, make sure the Wi-Fi is enabled on the device.

Check8 Make sure **Enable bidirectional support** is selected in the **Ports** sheet of the **Printer properties** dialog box. (Windows)

If not, select it to enable bidirectional support.

Check9 Make sure security software's firewall is off.

If your security software's firewall is on, a message may appear warning you that Canon software is attempting to access the network. If this warning message appears, set security software to always allow access.

If you are using any programs that switch between network environments, check their settings. Some programs use a firewall by default.

Check10 If printer is connected to an AirPort Base Station via LAN, make sure you use alphanumeric characters for network name (SSID). (macOS)

If the problem is not resolved, click here and redo setup.

Network Connection Problems

- Printer Suddenly Stopped Working for Some Reason
- Network Key (Password) Unknown
- Printer Cannot Be Used After Replacing Wireless Router or Changed Router Settings

Printer Suddenly Stopped Working for Some Reason

- Cannot Connect to a Printer after Network Configuration Changes
- Cannot Connect to a Printer via Wireless LAN (Wi-Fi)
- Cannot Connect to a Printer through Wireless Direct
- Cannot Print/Scan through Network

Q Cannot Connect to a Printer after Network Configuration Changes

A

It may take a while for the computer to obtain an IP address, or you may need to restart your computer.

Make sure the computer has obtained a valid IP address, and try again to find the printer.

Q Cannot Connect to a Printer via Wireless LAN (Wi-Fi)

A

Check1 Check the power status of printer, network devices (e.g. wireless router), and smartphone/tablet.

- Turn on the printer or devices.
- If the power is already turned on, cycle the power switch.
- It may be necessary to resolve wireless router problems (e.g. update interval of a key, problems of DHCP update interval, energy saving mode, etc.) or to update the wireless router firmware.

For details, contact the manufacturer of your wireless router.

Check2 Can you view any web pages on your computer?

Make sure your computer is connected to the wireless router properly.

For more on checking computer settings or connection status, see the instruction manual supplied with the computer or contact the manufacturer.

Check3 Is the printer connected to the wireless router?

Use the icon on the LCD to check the connection status between the printer and wireless router. If the icon is not displayed, Wi-Fi is disabled. Turn on wireless communication on the printer.

Check4 Make sure the printer and wireless router network settings match.

Make sure the network settings of the printer (e.g. network name (SSID) or network key (password), etc.) are identical with those of the wireless router.

To check the settings of the wireless router, refer to the instruction manual provided with it or contact its manufacturer.

Note

- Use 2.4 GHz frequency band to connect to a wireless router. Match the network name (SSID) set for the printer with that for 2.4 GHz frequency band of the wireless router.

To check the current network settings of the printer, print out the network setting information.

➡ Printing Network Settings

Note

- IJ Network Device Setup Utility allows you to diagnose and repair the network status.

  Select the link below to download IJ Network Device Setup Utility and install it.

  ➡ Checking Printer Connection Status Using IJ Network Device Setup Utility

  See below for starting up IJ Network Device Setup Utility.

  – **For Windows:**

    ➡ Starting Up IJ Network Device Setup Utility

  – **For macOS:**

    ➡ Starting Up IJ Network Device Setup Utility

Check5 Make sure the printer is not placed too far away from the wireless router.

If the distance between the printer and wireless router is too far, wireless communication becomes poor. Place the printer and wireless router close to each other.

Note

- Though an antenna is attached to most wireless routers, note that some of them have it inside.

Check6 Make sure wireless signal is strong. Monitor signal status and move printer and wireless router as necessary.

Place the printer and wireless router where there are no obstacles between them. Wireless communication between different rooms or floors is generally poor. Wireless communication can be impeded by building materials containing metal or concrete. If the printer cannot communicate with the computer over a Wi-Fi due to a wall, place the printer and the computer in the same room.

In addition, if a device like a microwave oven that emits radio waves of the same frequency bandwidth as a wireless router is nearby, it may cause interference. Place the wireless router as far away from interference sources as possible.

Check the signal strength on the LCD.

➡ Indication of LCD

Note

- IJ Network Device Setup Utility allows you to diagnose and repair the network status.

  Select the link below to download IJ Network Device Setup Utility and install it.

  ➡ Checking Printer Connection Status Using IJ Network Device Setup Utility

  See below for starting up IJ Network Device Setup Utility.

— **For Windows:**

➡ Starting Up IJ Network Device Setup Utility

— **For macOS:**

➡ Starting Up IJ Network Device Setup Utility

Check7 Make sure of the Wi-Fi channel numbers used for your computer.

You need to have the same Wi-Fi channel number that you are using for the wireless router as your computer. It is normally set in the way that you can use all the Wi-Fi channels. However, when the channels that you are using are restricted, the Wi-Fi channels do not match.

See the instruction manual provided with your computer and check the Wi-Fi channel number available for your computer.

Check8 Make sure channel set on wireless router is a usable channel as confirmed in Check 7.

If it is not, change the channel set on the wireless router.

Check9 Make sure security software's firewall is off.

If your security software's firewall is on, a message may appear warning you that Canon software is attempting to access the network. If this warning message appears, set security software to always allow access.

If you are using any programs that switch between network environments, check their settings. Some programs use a firewall by default.

Check10 If printer is connected to an AirPort Base Station via LAN, make sure you use alphanumeric characters for network name (SSID). (macOS)

If the problem is not resolved, click here and redo setup.

- **Positioning:**

  Place the printer and wireless router where there are no obstacles between them.

Q Cannot Connect to a Printer through Wireless Direct

A

Check1 Check the power status of printer and other devices (smartphone or tablet).

Turn on the printer or devices.

If the power is already turned on, cycle the power switch.

Check2 Check printer settings.

Make sure the (**Direct**) icon is displayed on the LCD.

If not, press the **Direct** button to enable Wireless Direct.

Check3 Check the settings of your device (smartphone/tablet).

Make sure Wi-Fi is enabled on your device.

For details, refer to your device's instruction manual.

Check4 Make sure printer is selected as connection for device (e.g. smartphone or tablet).

Select the network name (SSID) for Wireless Direct specified for the printer as the connection destination for devices.

Check the destination on your device.

For details, refer to your device's instruction manual or visit the manufacturer's website.

To check the network name (SSID) for Wireless Direct specified for the printer, print out the network setting information of the printer.

➡ Printing Network Settings

Check5 Have you entered the proper password specified for the Wireless Direct?

To check the password specified for the printer, print out the network setting information of the printer.

➡ Printing Network Settings

Check6 Make sure the printer is not placed too far away from the device.

If the distance between the printer and device is too far, wireless communication becomes poor. Place the printer and device close to each other.

Check7 Make sure 5 devices are already connected.

Wireless Direct does not allow more than 5 devices to be connected.

Q Cannot Print/Scan through Network

A

Check1 Make sure the computer is connected to the wireless router.

For more on how to check the computer settings or connection status, see your computer instruction manual or contact its manufacturer.

Check2 If MP Drivers are not installed, install them. (Windows)

Click here and install the MP Drivers.

Check3 When using Wi-Fi, make sure wireless router does not restrict which computers can access it.

For more on connecting to and setting up your wireless router, see the wireless router instruction manual or contact its manufacturer.

Note

- To check the MAC address or IP address of your computer, see Checking Computer IP Address or MAC Address.

Network Key (Password) Unknown

➡ WPA/WPA2 or WEP Key Set for Wireless Router Unknown, Cannot Connect
➡ Setting an Encryption Key

Q WPA/WPA2 or WEP Key Set for Wireless Router Unknown, Cannot Connect

A

For more on setting up a wireless router, see the instruction manual provided with the wireless router or contact its manufacturer. Make sure your computer can communicate with the wireless router.

Note

- IJ Network Device Setup Utility allows you to diagnose and repair the network status.

  Select the link below to download IJ Network Device Setup Utility and install it.

  ➡ Checking Printer Connection Status Using IJ Network Device Setup Utility

  See below for starting up IJ Network Device Setup Utility.

  – **For Windows:**

    ➡ Starting Up IJ Network Device Setup Utility

  – **For macOS:**

    ➡ Starting Up IJ Network Device Setup Utility

Q Setting an Encryption Key

A

For more on setting up a wireless router, see the instruction manual provided with the wireless router or contact its manufacturer. Make sure your computer can communicate with the wireless router.

Note

- IJ Network Device Setup Utility allows you to diagnose and repair the network status.

  Select the link below to download IJ Network Device Setup Utility and install it.

  ➡ Checking Printer Connection Status Using IJ Network Device Setup Utility

  See below for starting up IJ Network Device Setup Utility.

  – **For Windows:**

    ➡ Starting Up IJ Network Device Setup Utility

- **For macOS:**

  ➡ Starting Up IJ Network Device Setup Utility

Selecting WPA, WPA2, or WPA/WPA2 is recommended for security reason. If your wireless router is compatible with WPA/WPA2, you can also use WPA2 or WPA.

- **Using WPA/WPA2 (Windows)**

  The authentication method, Wi-Fi password, and dynamic encryption type must be identical among the wireless router, the printer, and your computer.

  Enter the Wi-Fi password configured on the wireless router.

  Either TKIP (basic encryption) or AES (secure encryption) is selected automatically as the dynamic encryption method.

  For details, see If WPA/WPA2 Details Screen Appears.

  Note

  - This printer supports WPA/WPA2-PSK (WPA/WPA2-Personal) and WPA2-PSK (WPA2-Personal).

- **Using WEP**

  The length or format of the Wi-Fi password and authentication method must be identical among the wireless router, the printer, and your computer.

  To communicate with a wireless router that generates a password automatically, you must set the printer to use the password generated by the wireless router.

  - **For Windows:**

    When the **WEP Details** screen appears after you click **Search...** on the **Network Settings (Wi-Fi)** screen in IJ Network Device Setup Utility, follow the on-screen instructions to set the password length, format, and the password to use.

    For details, see If WEP Details Screen Appears.

  Note

  - If the printer is connected to an AirPort Base Station via LAN:

    If the printer is connected to an AirPort Base Station via a LAN, check the settings in **Wireless Security** of **AirPort Utility**.

    - Select **64 bit** if **WEP 40 bit** is selected for password length in AirPort Base Station.
    - Select **1** for the password to use. Otherwise, computer will not be able to communicate with printer via the wireless router.

Printer Cannot Be Used After Replacing Wireless Router or Changed Router Settings

When you replace a wireless router, redo the network setup for the printer according to the replaced one.

Click here and perform setup.

Note

- IJ Network Device Setup Utility allows you to diagnose and repair the network status.

  Select the link below to download IJ Network Device Setup Utility and install it.

  ➡ Checking Printer Connection Status Using IJ Network Device Setup Utility

  See below for starting up IJ Network Device Setup Utility.

  – **For Windows:**

    ➡ Starting Up IJ Network Device Setup Utility

  – **For macOS:**

    ➡ Starting Up IJ Network Device Setup Utility

If this does not solve the problem, see below.

➡ Cannot Communicate with Printer After Enabling MAC/IP Address Filtering or Encryption Key on Wireless Router
➡ With Encryption On, Cannot Communicate with Printer After Changing Encryption Type at Wireless Router

Cannot Communicate with Printer After Enabling MAC/IP Address Filtering or Encryption Key on Wireless Router

Check1 Check wireless router setting.

To check the wireless router setting, see the instruction manual provided with the wireless router or contact its manufacturer. Make sure the computer and the wireless router can communicate with each other under this setting.

Check2 If filtering MAC addresses or IP addresses at wireless router, check that MAC addresses or IP addresses for computer, network device, and printer are registered.

Check3 If using WPA/WPA2 key or a password, make sure encryption key for computer, network device, and printer matches key set for wireless router.

The length or format of the Wi-Fi password and authentication method must be identical among the wireless router, the printer, and your computer.

For details, see Setting an Encryption Key.

Q With Encryption On, Cannot Communicate with Printer After Changing Encryption Type at Wireless Router

A

If you change the encryption type for the printer and it subsequently cannot communicate with the computer, make sure the encryption type for the computer and the wireless router matches the type set for the printer.

➡ Cannot Communicate with Printer After Enabling MAC/IP Address Filtering or Encryption Key on Wireless Router

Other Network Problems

- Checking Network Information
- Restoring to Factory Defaults

Checking Network Information

- Checking Printer IP Address or MAC Address
- Checking Computer IP Address or MAC Address
- Checking Communication Between the Computer, the Printer, and the Wireless Router
- Checking Network Setting Information

Q Checking Printer IP Address or MAC Address

A

To check the printer's IP Address or MAC address, print out the network settings information.

- Printing Network Settings

For Windows, you can check the network setting information on the computer screen.

- Canon IJ Network Device Setup Utility Screen

Q Checking Computer IP Address or MAC Address

A

To check the IP Address or MAC address of your computer, follow the instructions below.

- **For Windows:**

  1. Select **Command Prompt** as shown below.

     In Windows 10, right-click **Start** and select **Command Prompt**.

     In Windows 8.1, select **Command Prompt** from the **Start** screen. If **Command Prompt** is not displayed on the **Start** screen, select the **Search** charm and search for "**Command Prompt**".

     In Windows 7, click **Start** > **All Programs** > **Accessories** > **Command Prompt**.

  2. Enter "ipconfig/all" and press **Enter**.

     The IP address and MAC address of your computer appear. If your computer is not connected to a network, the IP address does not appear.

- **For macOS:**

  1. Select **System Preferences** from Apple menu, and then click **Network**.

  2. Make sure network interface used by computer is selected, and then click **Advanced**.

     When you are using Wi-Fi on your computer, make sure **Wi-Fi** is selected as network interface. When you are using wired LAN, make sure **Ethernet** is selected.

3. Click **TCP/IP** to check the IP address, or click **Hardware** to check the MAC address.

Q Checking Communication Between the Computer, the Printer, and the Wireless Router

A

Perform a ping test to check if communication is taking place.

- **For Windows:**

  1. Select **Command Prompt** as shown below.

     In Windows 10, right-click **Start** and select **Command Prompt**.

     In Windows 8.1, select **Command Prompt** from the **Start** screen. If **Command Prompt** is not displayed on the **Start** screen, select the **Search** charm and search for "**Command Prompt**".

     In Windows 7, click **Start** > **All Programs** > **Accessories** > **Command Prompt**.

  2. Type the ping command and press **Enter**.

     The ping command is as follows: ping XXX.XXX.XXX.XXX

     "XXX.XXX.XXX.XXX" is the IP address of the target device.

     If communication is taking place, a message like the one shown below appears.

     Reply from XXX.XXX.XXX.XXX: bytes=32 time=10ms TTL=255

     If **Request timed out** appears, communication is not taking place.

- **For macOS:**

  1. Start **Network Utility** as shown below.

     Select **Computer** from **Go** menu of Finder, double-click **Macintosh HD** > **System** > **Library** > **CoreServices** > **Applications** > **Network Utility**.

  2. Click **Ping**.

  3. Make sure **Send only XX pings** (XX are numbers) is selected.

  4. Enter IP address of target printer or target wireless router in **Enter the network address to ping**.

  5. Click **Ping**.

     "XXX.XXX.XXX.XXX" is the IP address of the target device.

     A message such as the following appears.

     64 bytes from XXX.XXX.XXX.XXX: icmp_seq=0 ttl=64 time=3.394 ms

64 bytes from XXX.XXX.XXX.XXX: icmp_seq=1 ttl=64 time=1.786 ms

64 bytes from XXX.XXX.XXX.XXX: icmp_seq=2 ttl=64 time=1.739 ms

--- XXX.XXX.XXX.XXX ping statistics ---

3 packets transmitted, 3 packets received, 0% packet loss

If "100% packet loss" appears, communication is not taking place. Otherwise, computer is communicating with target device.

Q Checking Network Setting Information

A

To check the printer's network settings information, print out the network settings information.

➡ Printing Network Settings

Restoring to Factory Defaults

Important

- Initialization erases all network settings on the printer, making printing operation from a computer over a network impossible. To use the printer over a network again after restoring it to the factory defaults, Click here and redo setup.

Press the **Setup** button until "11" appears on the LCD and press the **Black** button or the **Color** button.

The network settings are initialized.

Problems while Printing/Scanning from Smartphone/Tablet

- Cannot Print/Scan from Smartphone/Tablet

Cannot Print/Scan from Smartphone/Tablet

If you cannot print/scan from your smartphone/tablet, it is possible that your smartphone/tablet cannot communicate with the printer.

Check the cause of your problem according to the connection method.

- Cannot Communicate with Printer over Wireless LAN
- Cannot Communicate with Printer while It Is in Wireless Direct

Note

- For problems on printing with other connection methods or more on performing settings of each connection method:

  - Using PIXMA/MAXIFY Cloud Link
  - Printing with Google Cloud Print
  - Printing from iOS Device (AirPrint)

Q Cannot Communicate with Printer over Wireless LAN

A

If your smartphone/tablet cannot communicate with the printer, check the following.

Check1 Check the power status of printer, network devices (e.g. wireless router), and smartphone/tablet.

- Turn on the printer or devices.
- If the power is already turned on, cycle the power switch.
- It may be necessary to resolve wireless router problems (e.g. update interval of a key, problems of DHCP update interval, energy saving mode, etc.) or to update the wireless router firmware.

For details, contact the manufacturer of your wireless router.

Check2 Check the settings of your device (smartphone/tablet).

Make sure Wi-Fi is enabled on your device.

For details, refer to your device's instruction manual.

Check3 Is the printer connected to the wireless router?

Use the icon on the LCD to check the connection status between the printer and wireless router. If the icon is not displayed, Wi-Fi is disabled. Turn on wireless communication on the printer.

Check4 Are network settings of printer identical with those of wireless router?

Make sure the network settings of the printer (e.g. network name (SSID) or network key (password), etc.) are identical with those of the wireless router.

To check the settings of the wireless router, refer to the instruction manual provided with it or contact its manufacturer.

To check the current network settings of the printer, print out the network setting information.

➡ Printing Network Settings

Note

- IJ Network Device Setup Utility allows you to diagnose and repair the network status.

  Select the link below to download IJ Network Device Setup Utility and install it.

  ➡ Checking Printer Connection Status Using IJ Network Device Setup Utility

  See below for starting up IJ Network Device Setup Utility.

  - **For Windows:**

    ➡ Starting Up IJ Network Device Setup Utility

  - **For macOS:**

    ➡ Starting Up IJ Network Device Setup Utility

Check5 Are network settings of your smartphone/tablet identical with those of wireless router?

Make sure the network settings of the printer (e.g. network name (SSID) or network key (password), etc.) are identical with those of the wireless router.

To check the settings of your smartphone/tablet, refer to the instruction manual provided with it.

If the network settings of your smartphone/tablet are not identical with those of the wireless router, change the network settings of it to match with those of the wireless router.

Check6 Make sure the printer is not placed too far away from the wireless router.

If the distance between the printer and wireless router is too far, wireless communication becomes poor. Place the printer and wireless router close to each other.

Note

- Though an antenna is attached to most wireless routers, note that some of them have it inside.

Check7 Make sure wireless signal is strong. Monitor signal status and move printer and wireless router as necessary.

Place the printer and wireless router where there are no obstacles between them. Wireless communication between different rooms or floors is generally poor. Wireless communication can be impeded by building materials containing metal or concrete. If the printer cannot communicate with the computer over a Wi-Fi due to a wall, place the printer and the computer in the same room.

In addition, if a device like a microwave oven that emits radio waves of the same frequency bandwidth as a wireless router is nearby, it may cause interference. Place the wireless router as far away from interference sources as possible.

Check the signal strength on the LCD.

➡ Indication of LCD

Note

- IJ Network Device Setup Utility allows you to diagnose and repair the network status.

  Select the link below to download IJ Network Device Setup Utility and install it.

  ➡ Checking Printer Connection Status Using IJ Network Device Setup Utility

  See below for starting up IJ Network Device Setup Utility.

  – **For Windows:**

    ➡ Starting Up IJ Network Device Setup Utility

  – **For macOS:**

    ➡ Starting Up IJ Network Device Setup Utility

Q Cannot Communicate with Printer while It Is in Wireless Direct

A

If your smartphone/tablet cannot communicate with the printer in the Wireless Direct, check the following.

Check1 Check the power status of printer and other devices (smartphone or tablet).

Turn on the printer or devices.

If the power is already turned on, cycle the power switch.

Check2 Is Wireless Direct enabled?

Make sure the (Direct) icon displayed on the LCD.

If not, press the **Direct** button to enable Wireless Direct.

Check3 Check the settings of your device (smartphone/tablet).

Make sure Wi-Fi is enabled on your device.

For details, refer to your device's instruction manual.

Check4 Make sure printer is selected as connection for device (e.g. smartphone or tablet).

Select the network name (SSID) for Wireless Direct specified for the printer as the connection destination for devices.

Check the destination on your device.

For details, refer to your device's instruction manual or visit the manufacturer's website.

To check the network name (SSID) for Wireless Direct specified for the printer, print out the network setting information of the printer.

➡ Printing Network Settings

Check5 Have you entered the proper password specified for the Wireless Direct?

To check the password specified for the printer, print out the network setting information of the printer.

➡ Printing Network Settings

Check6 Make sure the printer is not placed too far away from the device.

If the distance between the printer and device is too far, wireless communication becomes poor. Place the printer and device close to each other.

Check7 Make sure 5 devices are already connected.

Wireless Direct does not allow more than 5 devices to be connected.

Printing Problems

- Printer Does Not Print
- Ink Does Not Come Out
- Printer Does Not Pick up or Feed the Paper/"No Paper" Error
- Printout Results Are Unsatisfactory

Q

Printer Does Not Print

A

Check1 Make sure printer is turned on.

If not, make sure the printer is securely plugged in and press **ON** button to turn on.

The **ON** lamp flashes while the printer is initializing. Wait until the **ON** lamp stops flashing and remains lit.

Note

- If you are printing large data such as photos or other graphics, printing may take longer to start. The **ON** lamp flashes while the computer is processing data and sending it to the printer. Wait until printing starts.

Check2 Make sure printer is properly connected to computer.

If you are using a USB cable, make sure it is securely connected to both the printer and the computer. When the USB cable is securely plugged in, check the following:

- If you are using a relay device such as a USB hub, disconnect it, connect the printer directly to the computer, and retry the printing. If printing starts normally, there is a problem with the relay device. Contact the vendor of the relay device.
- There could also be a problem with the USB cable. Replace the USB cable and retry the printing.

If you use the printer over a LAN, make sure the printer is correctly set up for network use.

➡ Cannot Find Printer while Using Wi-Fi

Note

- IJ Network Device Setup Utility allows you to diagnose and repair the network status.

  Select the link below to download IJ Network Device Setup Utility and install it.

  ➡ Checking Printer Connection Status Using IJ Network Device Setup Utility

  See below for starting up IJ Network Device Setup Utility.

  - **For Windows:**

    ➡ Starting Up IJ Network Device Setup Utility

  - **For macOS:**

    ➡ Starting Up IJ Network Device Setup Utility

Check3 Make sure paper settings match information set for rear tray.

If the paper settings do not match the information set for the rear tray, an error code appears on the LCD and message appears on the computer.

➡ When Error Occurred

Check4 If printing from a computer, delete unnecessary print jobs.

- **For Windows:**

  ➡ Deleting the Undesired Print Job

- **For macOS:**

  ➡ Deleting the Undesired Print Job

Check5 Is your printer's printer driver selected when printing?

The printer will not print properly if you are using a printer driver for a different printer.

- **For Windows:**

  Make sure "Canon XXX series" (where "XXX" is your printer's name) is selected in the Print dialog box.

  Note

  - If multiple printers are registered to your computer, set your printer as default printer to make the one selected by default.

- **For macOS:**

  Make sure your printer's name is selected in **Printer** in the Print dialog.

  Note

  - If multiple printers are registered to your computer, select **Set as Default Printer** from **System Preferences** > **Printers & Scanners** for a printer to make the one selected by default.

Check6 Are you trying to print a large data file? (Windows)

If you are trying to print a large date file, it takes a long time to start printing.

If the printer does not start printing after a certain period of time, select **On** for **Prevention of Print Data Loss** on the **Print Options** dialog box.

For details, refer to Page Setup Tab Description.

Important

- Selecting **On** for **Prevention of Print Data Loss** may reduce print quality.
- After printing is completed, select **Off** for **Prevention of Print Data Loss**.

Check7 If printing from your computer, restart the computer.

Restart the computer and try printing again.

Ink Does Not Come Out

Check1 Make sure of the estimated ink levels in the FINE cartridges.

Replace empty FINE cartridges with new ones.

➡ Replacing a FINE Cartridge

Check2 Is the FINE cartridge installed properly?

If the FINE cartridge is not installed securely, ink may not be ejected correctly.

Retract the output tray extension and the paper output tray, open the cover, then remove the FINE cartridges.

Then install the FINE cartridges again. Push up the FINE cartridge until it clicks into place.

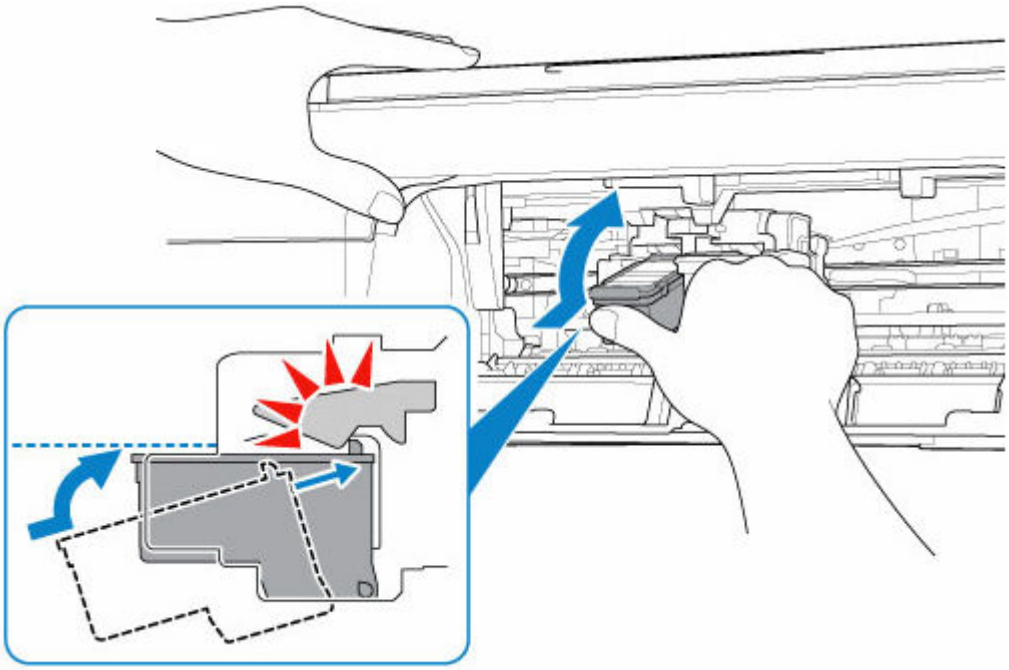

After confirming that the FINE cartridge is installed properly, close the cover.

Check3 Are the print head nozzles clogged?

Print the nozzle check pattern to determine whether the ink ejects properly from the print head nozzles.

For details on printing the nozzle check pattern, print head cleaning, and print head deep cleaning, see If Printing Is Faint or Uneven.

- **If nozzle check pattern is not printed correctly:**

  After performing the print head cleaning, print the nozzle check pattern and examine the pattern.

- **If problem is not resolved after performing print head cleaning twice:**

  Perform print head deep cleaning.

  If the problem is not resolved after performing print head deep cleaning, turn off the printer and perform print head deep cleaning again 24 hours later. When you turn the printer off, do not unplug it from the power supply.

- **If problem is not resolved after performing print head deep cleaning twice:**

  Ink may have run out. Replace the FINE cartridge.

Q

Printer Does Not Pick up or Feed the Paper/"No Paper" Error

A

Check1 Make sure paper is loaded.

➡ Loading Paper

Check2 When loading paper, consider the following.

- When loading two or more sheets of paper, align the edges of the sheets before loading the paper.
- When loading two or more sheets of paper, make sure the paper stack does not exceed the paper load limit.

  However, paper may not feed correctly at the maximum capacity, depending on the type of paper or environmental conditions (very high or low temperature and humidity). In such cases, reduce the amount of paper you load at a time to less than half of the paper load limit.
- Always load the paper in portrait orientation, regardless of the printing orientation.
- When you load the paper, load the paper with the print side facing UP. Align the paper stack against the right side of the rear tray and slide the paper guide so that it just touches the left edge of the stack.

  ➡ Loading Paper

Check3 Is paper too thick or curled?

➡ Unsupported Media Types

Check4 Make sure media type and paper size settings match with loaded paper.

Check5 Make sure that there are not any foreign objects in the rear tray.

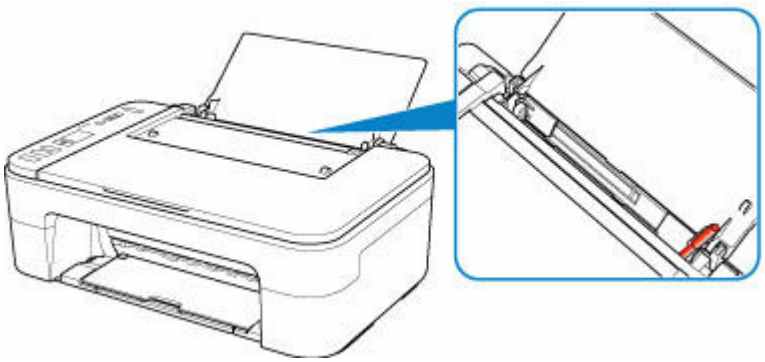

If the paper tears in the rear tray, see List of Support Code for Error (Paper Jams) to remove it.

If there are any foreign objects in the rear tray, be sure to turn off the printer, unplug it from the power supply, then remove the foreign object.

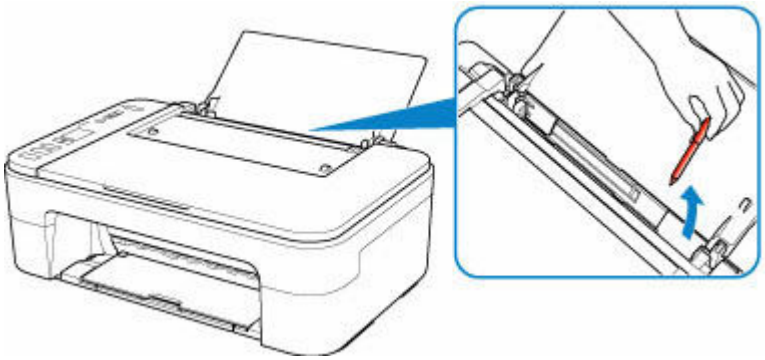

Check6 Clean paper feed roller.

➡ Cleaning Paper Feed Rollers

If the measures above do not solve the problem, contact your nearest Canon service center to request a repair.

Q

Printout Results Are Unsatisfactory

A

If the print results are unsatisfactory due to white streaks, misaligned/distorted lines, or uneven colors, check the paper and print quality settings first.

Check1 Do page size and media type settings match size and type of loaded paper?

If these settings do not match, it is not possible to obtain the proper result.

If you are printing a photograph or an illustration, an incorrect paper type setting may reduce the quality of the printout color.

Also, if you print with an incorrect paper type setting, the printed surface may be scratched.

In borderless printing, uneven coloring may occur depending on the combination of the paper type setting and the loaded paper.

The method for checking the paper and print quality settings differs depending on what you are using your printer for.

- **Copying:**

  Check the settings using the operation panel.

  ➡ Making Copies on Plain Paper
  ➡ Copying on Photo Paper

- **Printing from your computer**

  Check the settings using the printer driver.

  ➡ Basic Printing Setup

- **Printing from a PictBridge (Wi-Fi) compliant device.**

  Check the settings on your PictBridge (Wi-Fi) compliant device or using the operation panel.

  ➡ PictBridge (Wi-Fi) Print Settings

- **Printing from your smartphone/tablet using Canon PRINT Inkjet/SELPHY**

  Check the settings on Canon PRINT Inkjet/SELPHY.

  ➡ Print Photos from Your Smartphone

Check2 Make sure appropriate print quality is selected (see list above).

Select a print quality suited to the paper and to what you are printing. If you notice blurs or uneven colors, increase the print quality setting and retry the printing.

Note

- When printing from a PictBridge (Wi-Fi) compliant device, set the print quality setting using the operation panel.

  This setting cannot be made on the PictBridge (Wi-Fi) compliant device.

Check3 If problem is not resolved, check also the sections below.

See also the sections below:

- Printouts Are Blank/Blurry or Fuzzy/Inaccurate or Bleeding Colors/Streaks or Lines
- Colors Are Unclear
- Lines Are Misaligned/Distorted
- Paper Is Smudged / Printed Surface Is Scratched
- Cannot Complete Printing
- Lines Incomplete or Missing (Windows)
- Images Incomplete or Missing (Windows)
- Ink Blots / Paper Curl
- Back of Paper Is Smudged
- Uneven or Streaked Colors

If Printed Paper Has Been Discolored

Colors may fade with time if the printed paper is left for a long period of time.

After printing, dry the paper sufficiently, avoid high temperatures, high humidity, and direct sunlight, and store or display indoors at room temperature and normal humidity.

To avoid direct exposure to air, we recommend that you store the paper in an album, plastic folder, photo frame, etc.

Q

Printouts Are Blank/Blurry or Fuzzy/Inaccurate or Bleeding Colors/ Streaks or Lines

Printing Is Blurry

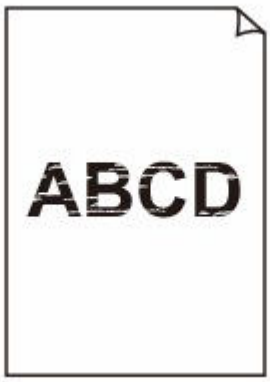

Colors Are Wrong

White Streaks Appear

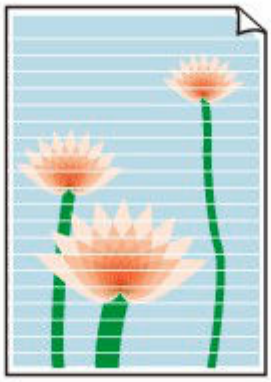

A

Check1 Check paper and print quality settings.

➡ Printout Results Are Unsatisfactory

Check2 Make sure of the estimated ink levels in the FINE cartridges.

Replace empty FINE cartridges with new ones.

➡ Replacing a FINE Cartridge

Check3 Are the print head nozzles clogged?

Print the nozzle check pattern to determine whether the ink ejects properly from the print head nozzles.

For details on printing the nozzle check pattern, print head cleaning, and print head deep cleaning, see If Printing Is Faint or Uneven.

- **If nozzle check pattern is not printed correctly:**

  After performing the print head cleaning, print the nozzle check pattern and examine the pattern.

- **If problem is not resolved after performing print head cleaning twice:**

  Perform print head deep cleaning.

  If the problem is not resolved after performing print head deep cleaning, turn off the printer and perform print head deep cleaning again 24 hours later. When you turn the printer off, do not unplug it from the power supply.

- **If problem is not resolved after performing print head deep cleaning twice:**

  Ink may have run out. Replace the FINE cartridge.

Check4 When using paper with one printable surface, check the correct printable side of the paper.

Printing on the wrong side of such paper may cause unclear prints or prints with reduced quality.

Load paper with the printable side facing up.

Refer to the instruction manual supplied with the paper for detailed information on the printable side.

Check5 Is the FINE cartridge installed properly?

If the FINE cartridge is not installed securely, ink may not be ejected correctly.

Retract the output tray extension and the paper output tray, open the cover, then remove the FINE cartridges.

Then install the FINE cartridges again. Push up the FINE cartridge until it clicks into place.

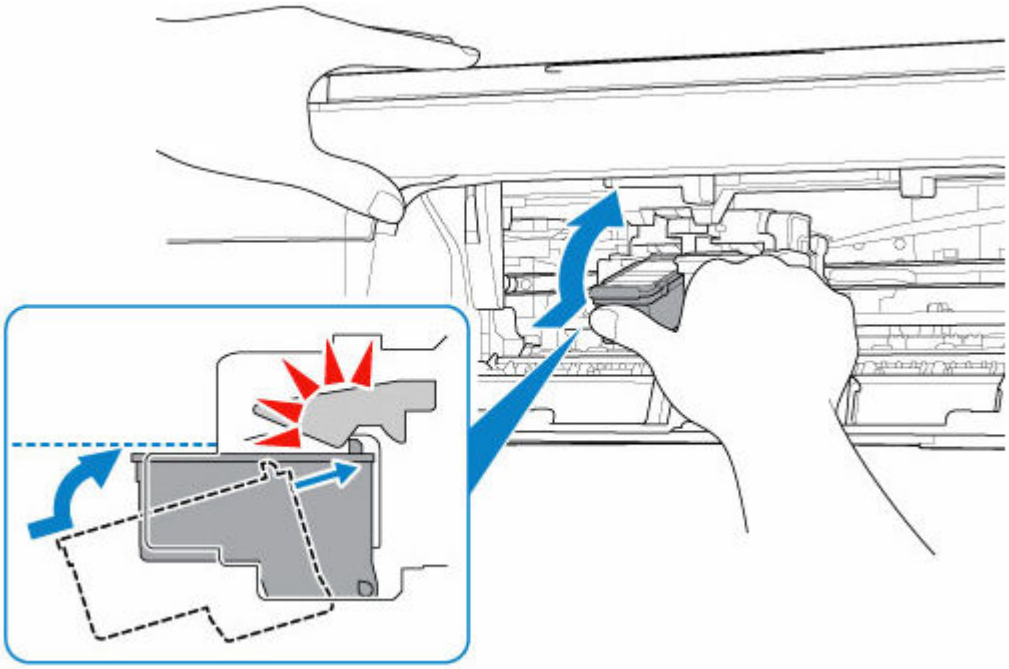

After confirming that the FINE cartridge is installed properly, close the cover.

- **When copying, see also the sections below:**

Check6 Is platen glass dirty?

Clean the platen glass.

➡ Cleaning Platen and Document Cover

Check7 Make sure original is properly loaded on platen.

When you load the original on the platen, load it with the side to be copied facing down.

➡ Loading Originals

Check8 Did you copy a printout done by this printer?

If you use a printout done by this printer as the original, print quality may be reduced depending on the condition of the original.

Reprint from the computer if you can reprint from it.

Colors Are Unclear

Check1 Is nozzle check pattern printed properly?

Print the nozzle check pattern to determine whether the ink ejects properly from the print head nozzles.

For details on printing the nozzle check pattern, print head cleaning, and print head deep cleaning, see If Printing Is Faint or Uneven.

- **If nozzle check pattern is not printed correctly:**

  After performing the print head cleaning, print the nozzle check pattern and examine the pattern.

- **If problem is not resolved after performing print head cleaning twice:**

  Perform print head deep cleaning.

  If the problem is not resolved after performing print head deep cleaning, turn off the printer and perform print head deep cleaning again 24 hours later. When you turn the printer off, do not unplug it from the power supply.

- **If problem is not resolved after performing print head deep cleaning twice:**

  Ink may have run out. Replace the FINE cartridge.

Check2 When a FINE cartridge runs out of ink, replace it with a new one.

Check3 Is FINE cartridge installed properly?

If the FINE cartridge is not installed securely, ink may not be ejected correctly.

Retract the output tray extension and the paper output tray, open the cover, then remove the FINE cartridges.

Then install the FINE cartridges again. Push up the FINE cartridge until it clicks into place.

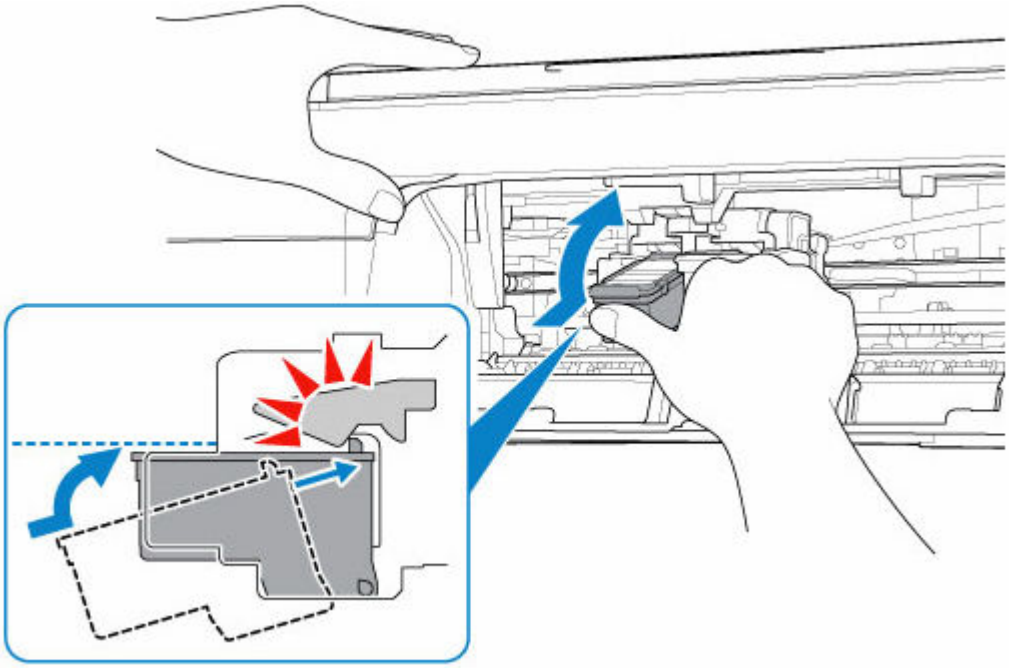

After confirming that the FINE cartridge is installed properly, close the cover.

Note

- Printed colors may not match screen colors due to basic differences in the methods used to produce colors. Color control settings and environmental differences can also affect how colors appear on the screen. Therefore, colors of printing results may be different from those on the screen.

Q

Lines Are Misaligned/Distorted

A

Check1 Check paper and print quality settings.

➡ Printout Results Are Unsatisfactory

Check2 Perform print head alignment.

If printed lines are misaligned/distorted or print results are otherwise unsatisfactory, adjust the print head position.

➡ Aligning the Print Head

Note

- For Windows, if the problem is not resolved after performing the print head alignment, perform print head alignment manually from your computer.

  ➡ Adjusting Print Head Position Manually

Check3 Increase print quality and try printing again.

Increasing the print quality may improve the print result.

Q

Paper Is Smudged / Printed Surface Is Scratched

Paper Is Smudged

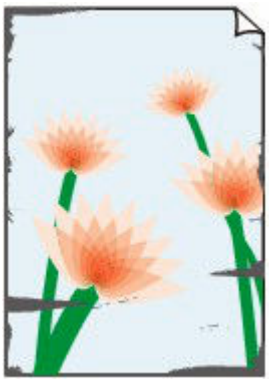

Smudged Edges

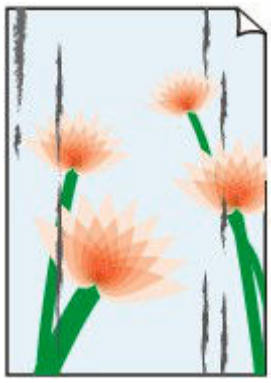

Smudged Surface

Printed Surface Is Scratched

A

Check1 Check paper and print quality settings.

➡ Printout Results Are Unsatisfactory

Check2 Check paper type.

Make sure you are using the right paper for what you are printing.

➡ Supported Media Types

Check3 Correct curl before loading paper.

We recommend putting unused paper back into the package and storing it flat.

- **Plain Paper**

  Turn the paper over and reload it to print on the other side.

- **Other Paper such as envelope**

  If the paper corners curl more than 0.1 in. / 3 mm (A) in height, the paper may smudge or may not feed properly. Follow the instructions below to correct the paper curl.

1. Roll up paper in opposite direction to paper curl as shown below.

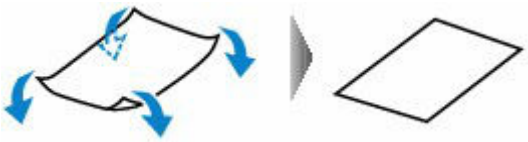

2. Check that paper is now flat.

   We recommend printing curl-corrected paper one sheet at a time.

Note

- Depending on paper type, the paper may smudge or may not feed properly even if it is not curled inward. Follow the instructions below to curl the paper outward up to 0.1 in. / 3 mm (C) in height before printing. This may improve the print result.

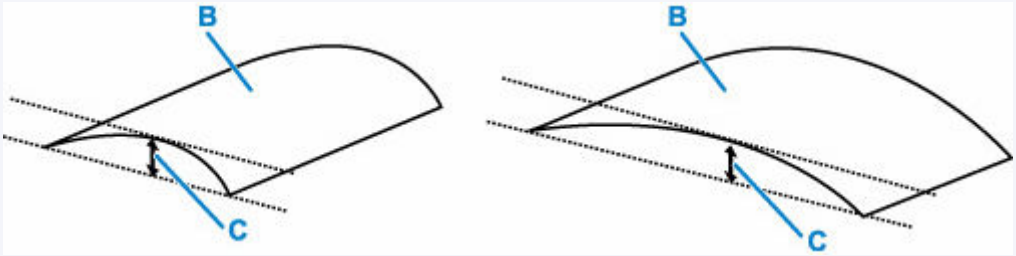

(B) Print side

We recommend feeding paper that has been curled outward one sheet at a time.

Check4 If intensity is set high, reduce intensity setting and try printing again. (Windows)

If you are printing with a high intensity setting on plain paper, the paper may absorb too much ink and become wavy, causing paper abrasion.

Check the intensity setting in the printer driver.

➡ Adjusting Intensity

Check5 Is platen glass dirty?

Clean the platen glass.

➡ Cleaning Platen and Document Cover

Check6 Is paper feed roller dirty?

Clean paper feed roller.

➡ Cleaning Paper Feed Rollers

Check7 Is inside of printer dirty?

During duplex printing, ink may stain the inside of the printer, smudging the printout.

Perform bottom plate cleaning to clean inside of printer.

➡ Cleaning Inside the Printer (Bottom Plate Cleaning)

Note

- To prevent staining inside the printer, be sure to set the correct paper size.

Check8 Set longer ink drying time.

This allows the printed surface to dry, preventing smudges and scratches.

- **For Windows:**

  1. Check that printer is turned on.
  2. Open Canon IJ Printer Assistant Tool.

     ➡ Opening the Maintenance Tool (Canon IJ Printer Assistant Tool)
  3. Select **Custom Settings**.
  4. Drag **Ink Drying Wait Time** slide bar to set the wait time and select **OK**.
  5. Check message and select **OK**.

- **For macOS:**

  Set the waiting time using Remote UI.

  ➡ Opening Remote UI for Maintenance

Scanning Problems (macOS)

➤ Scanning Problems

Scanning Problems

- Scanner Does Not Work
- Scanner Driver Does Not Start

Scanner Does Not Work

Check 1 Check that your scanner or printer is turned on.

Check 2 With network connection, check the connection status and reconnect as needed.

Check 3 With USB connection, connect the USB cable to a different USB port on the computer.

Check 4 If the USB cable is connected to a USB hub, remove it from the USB hub and connect it to a USB port on the computer.

Check 5 Restart the computer.

Check 6 To scan from the printer's operation panel with USB connection, click **Scan-from-Operation-Panel Settings** in the **Settings (General Settings)** dialog, and then check that the following checkboxes are selected.

- Your scanner or printer
- **Enables scanning from the operation panel**

Scanner Driver Does Not Start

Check 1 Make sure the application software supports AirPrint.

Check 2 Select your scanner or printer on the application's menu.

Note

- The operation may differ depending on the application.

Check 3 Scan and save images with IJ Scan Utility Lite and open the files in your application.

Check 4 Your scanner may be locked. (Personal scanners only)

If IJ Scan Utility Lite or the application is running, exit it. Slide the scanner lock switch to the release position ( ), then reconnect the USB cable.

Error Message Is Displayed

Check Your scanner may be locked.

If IJ Scan Utility Lite or the application is running, exit it. Slide the scanner lock switch to the release position ( ), then reconnect the USB cable.

Refer to the printed manual: Getting Started for how to unlock the scanner.

Scanning Does Not Start / Scanning Does Not Complete

Check Your scanner may be locked.

If IJ Scan Utility Lite or the application is running, exit it. Slide the scanner lock switch to the release position ( ), then reconnect the USB cable.

Refer to the printed manual: Getting Started for how to unlock the scanner.

Items Cannot Be Scanned Correctly

Check Your scanner may be locked.

If IJ Scan Utility Lite or the application is running, exit it. Slide the scanner lock switch to the release position ( ), then reconnect the USB cable.

Refer to the printed manual: Getting Started for how to unlock the scanner.

Mechanical Problems

- Printer Does Not Turn On
- Printer Turns Off Unexpectedly or Repeatedly
- USB Connection Problems
- Cannot Communicate with Printer via USB

Printer Does Not Turn On

Check1 Press **ON** button.

Check2 Make sure power plug is securely connected to printer, and then turn on again.

Check3 Unplug printer, leave it for at least 2 minutes, and then plug it back in and turn on again.

If this does not solve the problem, contact your nearest Canon service center to request a repair.

Q

Printer Turns Off Unexpectedly or Repeatedly

A

Check If printer is set to turn off automatically after a certain time, disable this setting.

If you have set the printer to turn off automatically after a specified time, the power will shut off by itself once that time has elapsed.

Note

- If this setting is changed, power consumption may increase.

- **To disable the setting from the operation panel:**

  1. Make sure printer is turned on.
  2. Press the **Setup** button repeatedly until "13" appears on LCD.

     ➡ Indication of LCD

  3. Press the **Black** button.

     The setting to shut off the power automatically is disabled.

- **To disable the setting from the computer:**

  For Windows, use Canon IJ Printer Assistant Tool to disable the setting.

  Follow the procedure below to disable the setting using Canon IJ Printer Assistant Tool.

  1. Open Canon IJ Printer Assistant Tool.

     ➡ Opening the Maintenance Tool (Canon IJ Printer Assistant Tool)

  2. Select **Auto Power**.
  3. Select **Disable** for **Auto Power Off**.
  4. Select **OK**.
  5. Select **OK** on the displayed screen.

     The setting to shut off the power automatically is disabled.

  Note

  - See below for details on how to disable the setting from ScanGear (scanner driver).

➡ Scanner Tab

USB Connection Problems

Make sure of the checking item below when you find one of the followings.

- Printing or scanning is slow.
- Hi-Speed USB connection does not work.
- A message such as "**This device can perform faster**" appears. (Windows)

Note

- If your system environment does not support Hi-Speed USB, the printer operates at the slower speed of USB 1.1. In this case, the printer works properly but printing or scanning speed may slow down due to the communication speed.

Check Check following to make sure your system environment supports Hi-Speed USB connection.

- Does the USB port on your computer support Hi-Speed USB connection?
- Does the USB cable or the USB hub support Hi-Speed USB connection?

  Be sure to use a certified Hi-Speed USB cable. We recommend that the USB cable be no longer than 10 feet / 3 meters or so.
- Is the Hi-Speed USB driver working properly on your computer?

  Make sure the latest Hi-Speed USB driver is working properly and obtain and install the latest version of the Hi-Speed USB driver for your computer, if necessary.

Important

- For more information, contact the manufacturer of your computer, USB cable, or USB hub.

Cannot Communicate with Printer via USB

Check1 Make sure printer is turned on.

Check2 Connect USB cable properly.

As the illustration below, the USB port is at the back of the printer.

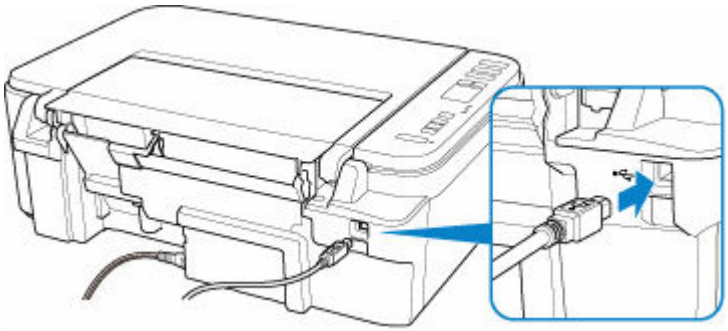

Important

- Connect the "Type-B" terminal to the printer with the notched side facing UP. For details, refer to the instruction manual supplied with the USB cable.

Check3 Make sure **Enable bidirectional support** is selected in the **Ports** sheet of the **Printer properties** dialog box. (Windows)

If not, select it to enable bidirectional support.

➡ Opening Printer Driver's Setup Screen

Installation and Download Problems

- Failed to MP Drivers Installation (Windows)
- Updating MP Drivers in Network Environment (Windows)

Failed to MP Drivers Installation (Windows)

- If you cannot get past the Printer Connection screen:
- Other cases:

If you cannot get past the Printer Connection screen:

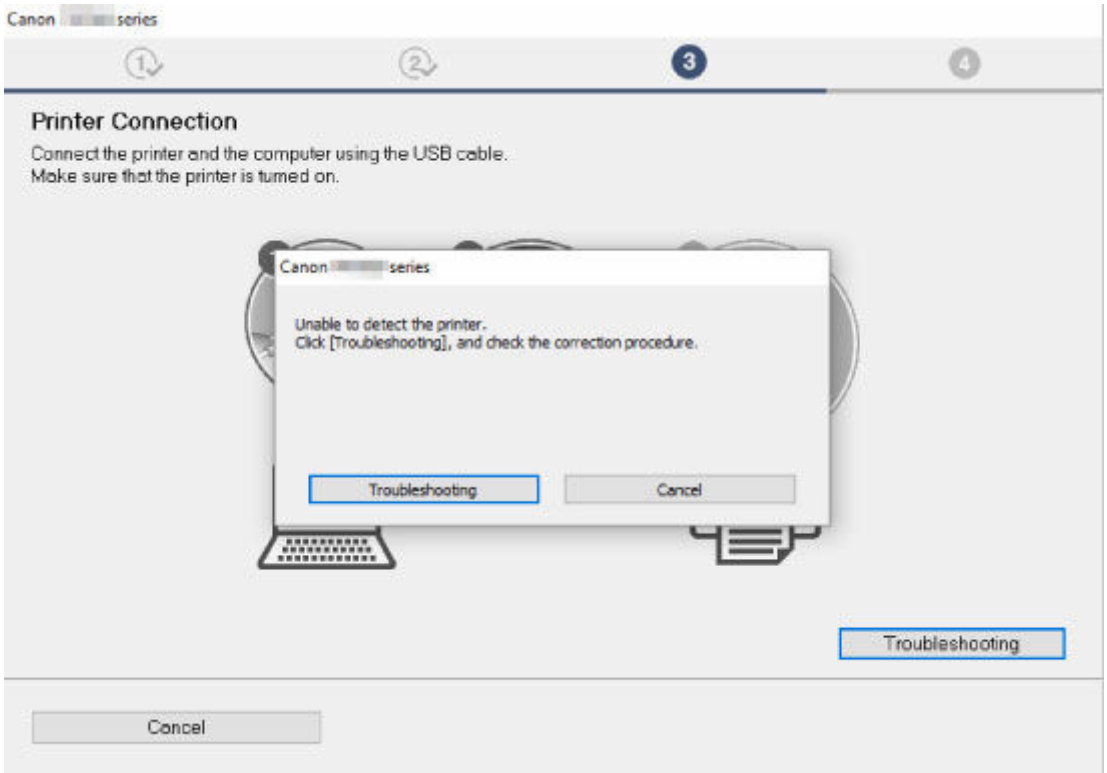

- Cannot Proceed beyond Printer Connection Screen

Other cases:

If the MP Drivers were not installed correctly, uninstall the MP Drivers, restart your computer, and then reinstall the MP Drivers.

- Deleting the Unnecessary MP Drivers

Click here and install the MP Drivers.

Note

- If the installer was stopped due to a Windows error, Windows operation may be unstable, and you may not be able to install the drivers. Restart your computer and then reinstall the drivers.

Updating MP Drivers in Network Environment (Windows)

Download the latest MP Drivers.

Download the latest MP Drivers for your model on the download page of the Canon website.

Uninstall the existing MP Drivers and follow the installation instructions to install the latest MP Drivers that you downloaded. In the connection method selection screen, select **Use the printer with Wi-Fi connection**. The printer is detected automatically in the network.

Make sure the printer was found, and install the MP Drivers following the on-screen instructions.

Note

- The network settings on the printer are not affected, so the printer can be used on the network without redoing settings.

Errors and Messages

- When Error Occurred
- Message (Support Code) Appears

When Error Occurred

If an error occurs in printing, for example if the paper runs out or jams, a troubleshooting message appears automatically. Take the appropriate action described in the message.

When an error occurs, a message appears on the computer screen and an error code on the LCD. For some errors, a support code (error number) appears.

When a Support Code and a message are displayed on the computer screen (Windows):

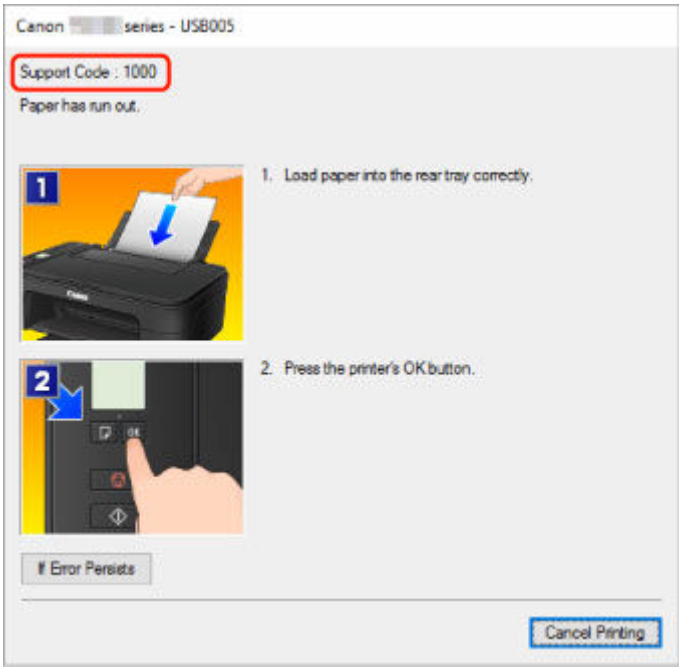

When an error code is displayed on the printer's LCD:

- The **Alarm** lamp lights up and an error code appears.

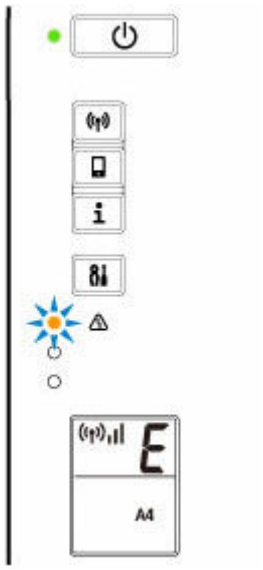

- The **ON** lamp and **Alarm** lamp flash alternately and an error code appears.

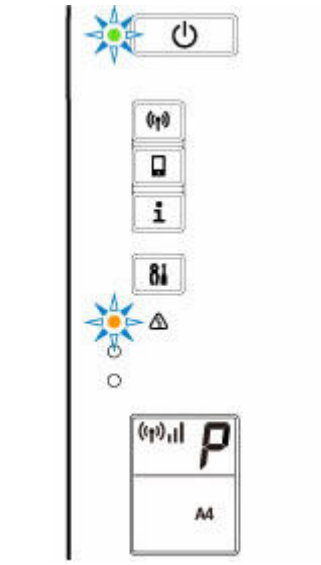

The error code appears on the LCD one by one.

If the error code is "E03":

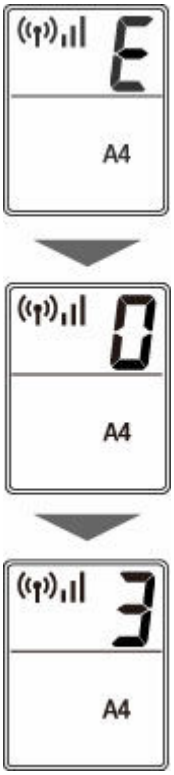

Check the error code on the LCD and the support code corresponding with it. See the table below for details.

Error Code	Support Code	Cause	Action
E02	1000 3442 3443	Printer is out of paper. Printing one side is complete if you are performing manual duplex printing.	• If the printer is out of paper: ➡ 1000 • If you are performing manual duplex printing:

	3444 3445		Prepare to print the other side following the instructions on the computer screen.
E03	1203 1300	Cover is opened during printing. Paper is jammed when feeding paper from rear tray.	• If the cover is open: ➡ 1203 • If paper is jammed: ➡ 1300
E04	168A	FINE cartridge is not installed.	➡ 168A
E05	1401 1403 1430 1485	Ink cartridge cannot be recognized.	Check the following. • if the color FINE cartridge is installed on the left side properly • if the black FINE cartridge is installed on the right side properly • Model number of each FINE cartridge If the above does not resolve the problem, replace the FINE cartridge with a new one. ➡ Replacing a FINE Cartridge
E08	1700 1701 1712 1713 1714 1715	Ink absorber is almost full.	➡ 1700 ➡ 1701 ➡ 1712 ➡ 1713 ➡ 1714 ➡ 1715
E09	1890	Shipping tape or protective material may still be attached to FINE cartridge holder.	➡ 1890
E11	4102 4103	Cannot perform printing with current print settings.	➡ 4102 ➡ 4103
E12	4100	Specified data cannot be printed.	➡ 4100
E13	1686	The ink may have run out.	➡ 1686
E14	1684	The ink cartridge cannot be recognized.	➡ 1684
E15	1682	FINE cartridge cannot be recognized.	➡ 1682
E16	1688	The ink has run out.	➡ 1688
E23	3446	IP address and subnet mask are conflicting.	➡ 3446
E31	–	Failed in Wi-Fi setup.	Press the printer's **OK** button to resolve the error. If you are performing setup with WPS: 1. Check the security settings and perform setup again.

			2. Perform setup using another setup method.
E32	–	Cannot find a wireless router during setup.	Press the printer's **OK** button to resolve the error. Perform Wi-Fi setup again.
E33	–	Cannot connect because multiple wireless routers are connecting to the printer.	Press the printer's **OK** button to resolve the error. Perform Wi-Fi setup again after a while (about 2 minutes). If the above does not resolve the problem, refer to the instruction manual supplied with the wireless router.
E34	3440	Easy wireless connect has failed.	➡ 3440
E36	3441	Easy wireless connect has failed.	➡ 3441
E37	–	Failed in Wi-Fi setup.	Press the printer's **OK** button to resolve the error. Turn off the wireless router and turn it back on, and then perform setup again. If the above does not resolve the problem, refer to the instruction manual supplied with the wireless router and check the settings.
E38	–	Cannot connect to a wireless router. Cannot change the LAN settings.	Press the printer's **OK** button to resolve the error. Check the following. • if the printer's Wi-Fi is enabled • if you select a proper wireless router to connect • if the password you entered is correct • if the specified network name (SSID) is correct After checking the above, turn off the wireless router and turn it on again. You cannot change LAN settings while you are using LAN. Change them when you are not using LAN.
E39	495A	An error occurred while communicating via Wi-Fi or while in standby.	➡ 495A
E45	–	Cannot connect to network.	Press the printer's **OK** button to resolve the error. Check the LAN connection and network settings. Connection may be successful after a while.

E46	–	Cannot connect to Internet.	Press the printer's **OK** button to resolve the error. Check the wireless router settings.
E47	–	Cannot connect to server.	Press the printer's **OK** button to resolve the error and perform operations again after a while. If you are using Google Cloud Print, it is possible that your printer is not registered. Make sure your printer is registered. ➡ Printing with Google Cloud Print
E48	–	Cannot connect to server.	Press the printer's **OK** button to resolve the error and perform operations again after a while.
E49	–	Failed in connecting to Internet because network connection is being prepared.	Press the printer's **OK** button to resolve the error and perform operations again after a while.
E50	–	Failed in acquiring contents.	Press the printer's **OK** button to resolve the error and perform operations again after a while.
E51	–	Cannot connect to server.	Press the printer's **OK** button to resolve the error and perform operations again after a while.
E52	–	Failed in registering the printer to Google Cloud Print due to timeout.	Press the printer's **OK** button to resolve the error and perform operations again after a while.
E53	–	Only information registered to the printer is deleted because of failing to connect Google Cloud Print.	Press the printer's **OK** button to resolve the error. Delete registered information of Google Cloud Print from your computer or smartphone.
E54	–	Only information registered to the printer is deleted because of failing to connect IJ Cloud Printing Center.	Press the printer's **OK** button to resolve the error. Delete registered information of IJ Cloud Printing Center from your computer or smartphone.
E55	–	The printer is already registered to IJ Cloud Printing Center.	Press the printer's **OK** button to resolve the error. Delete registered information of IJ Cloud Printing Center and register the printer again.
E56	–	The online service is not available in your region.	Press the printer's **OK** button to resolve the error. Contact the provider for where the online service is available.
E57	2900	Scanning print head alignment sheet failed.	➡ 2900
E58	–	Trying to start copying before you register the paper size.	Register the paper size and start copying. Press the **Stop** button to cancel copying.

E59	2114	Paper size settings at printer driver do not match the paper size registered in the printer.	➡ 2114
E61	3412	Scanning original has failed.	➡ 3412
E62	–	Unexpected error occurred while scanning is in progress.	Press the printer's **OK** button to resolve the error. Change settings and perform operations again.
E63	–	Reached the upper limit of pages which can be saved.	Press the printer's **OK** button to resolve the error. No more pages can be saved in one file. Save the rest as different one.
E64	–	Scanning original has failed.	Original is not placed on the platen or the original cannot be scanned. Press the printer's **OK** button to resolve the error and check the following. • Make sure the original is placed on the platen. • Make sure the original is set in the correct position and orientation. After checking the above, perform operations again.
E65	–	Saving scanned data failed because the printer's memory is full.	Press the printer's **OK** button to resolve the error. And then, take measures below. • Reduce the resolution and rescan the original. • Reduce the amount of original to be scanned at a time.
P02	5100	Printer error has occurred.	➡ 5100
P03	6000	Printer error has occurred.	➡ 6000
P07	5B00 5B01 5B12 5B13 5B14 5B15	Printer error has occurred.	➡ 5B00 ➡ 5B01 ➡ 5B12 ➡ 5B13 ➡ 5B14 ➡ 5B15
P08 P09 P20 P22	5011 5012 5050 5200 5205	Printer error has occurred.	Turn off the printer and unplug it. Plug in the printer again and turn it back on. If this does not solve the problem, contact your nearest Canon service center to request a repair.

P26 P27 P28 P29	5206 6500 6800 6801 6900 6901 6902 6910 6911 6930 6931 6932 6933 6936 6937 6938 6940 6941 6942 6943 6944 6945 6946		
P10	B202 B203 B204 B205	An error requiring a repair has occurred.	Turn off the printer and unplug it. Contact your nearest Canon service center to request a repair.

For details on how to resolve errors with Support Codes, see List of Support Code for Error.

For details on how to resolve errors without Support Codes, see Message (Support Code) Appears.

Message (Support Code) Appears

This section describes some of the messages that may appear on the computer screen.

Note

- A support code (error number) is displayed on the computer for some errors. For details on errors that have support code, see List of Support Code for Error.

- Error Regarding Power Cord Being Unplugged Is Displayed (Windows)
- Writing Error/Output Error/Communication Error (Windows)
- Other Error Messages (Windows)

Q Error Regarding Power Cord Being Unplugged Is Displayed (Windows)

A

The printer may have been unplugged while it was on.

Check the error message that appears on the computer and click **OK**.

The printer starts printing.

See Unplugging the Printer for unplugging the power cord.

Q Writing Error/Output Error/Communication Error (Windows)

A

Check1 If the **ON** lamp is off, make sure printer is plugged in and turn on.

The **ON** lamp flashes while the printer is initializing. Wait until the **ON** lamp stops flashing and remains lit.

Check2 Make sure printer is properly connected to computer.

If you are using a USB cable, make sure it is securely connected to both the printer and the computer. When the USB cable is securely plugged in, check the following:

- If you are using a relay device such as a USB hub, disconnect it, connect the printer directly to the computer, and retry the printing. If printing starts normally, there is a problem with the relay device. Contact the vendor of the relay device.
- There could also be a problem with the USB cable. Replace the USB cable and retry the printing.

If you use the printer over a LAN, make sure the printer is correctly set up for network use.

Check3 Make sure MP Drivers are installed correctly.

Uninstall the MP Drivers following the procedure described in Deleting the Unnecessary MP Drivers and reinstall them from the Setup CD-ROM or the Canon website.

Check4 When printer is connected to your computer with a USB cable, check device status from your computer.

Follow the procedure below to check the device status.

1. Select **Control Panel** > **Hardware and Sound** > **Device Manager**.

   Note

   - If the **User Account Control** screen appears, select **Continue**.

2. Open **USB Printing Support Properties**.

   Double-click **Universal Serial Bus controllers** and **USB Printing Support**.

   Note

   - If **USB Printing Support Properties** screen does not appear, make sure the printer is correctly connected to the computer.

     ➡ Check2 Make sure printer is properly connected to computer.

3. Click **General** tab and check for a device problem.

   If a device error is shown, see Windows Help to resolve it.

Q Other Error Messages (Windows)

A

Check If an error message appears outside printer status monitor, check the following:

- **"Could not spool successfully due to insufficient disk space"**

  Delete any unnecessary files to increase the amount of free space on the disk.

- **"Could not spool successfully due to insufficient memory"**

  Close other applications to increase the available memory.

  If you still cannot print, restart your computer and retry the printing.

- **"Printer driver could not be found"**

  Uninstall the MP Drivers following the procedure described in Deleting the Unnecessary MP Drivers and reinstall them from the Setup CD-ROM or the Canon website.

- **"Could not print Application name** - File name"

  Try printing again once the current job is complete.

List of Support Code for Error

Support code appears on your computer screen when errors occur.

A "support code" is an error number, and appears along with an error message.

When an error occurs, check the support code displayed on the computer screen and take the appropriate action in response.

Support Code Appears on Computer Screen

- **1000 to 1ZZZ**

  1000 1200 1203 1300 1401 1403

  1430 1485 15A2 1682 1684 1686

  1688 168A 1700 1701 1712 1713

  1714 1715 1890

- **2000 to 2ZZZ**

  2114 2123 2900 2901

- **3000 to 3ZZZ**

  3412 3439 3440 3441 3442 3443

  3444 3445 3446

- **4000 to 4ZZZ**

  4100 4102 4103 495A

- **5000 to 5ZZZ**

  5011 5012 5050 5100 5200 5205

  5206 5B00 5B01 5B12 5B13 5B14

  5B15

- **6000 to 6ZZZ**

  6000 6500 6800 6801 6900 6901

  6902 6910 6911 6930 6931 6932

  6933 6936 6937 6938 6940 6941

  6942 6943 6944 6945 6946

- **A000 to ZZZZ**

  B202 B203 B204 B205

For paper jam support codes, see also List of Support Code for Error (Paper Jams).

List of Support Code for Error (Paper Jams)

If paper jams, remove it following the appropriate procedure as shown below.

- If you can see the jammed paper at the paper output slot or the rear tray:

  ➡ 1300

- If you cannot see the jammed paper at the paper output slot or the rear tray:

  ➡ Paper Is Jammed inside Printer

- Cases other than above:

  ➡ Other Cases

1300

Cause

Paper is jammed when feeding paper from rear tray.

What to Do

If the paper fed from the rear tray is jammed, remove the jammed paper from the paper output slot or from the rear tray following the instructions below.

1. Slowly pull out paper, either from paper output slot or from rear tray, whichever is easier.

   Hold the paper with both hands, and pull it out slowly so as not to tear it.

   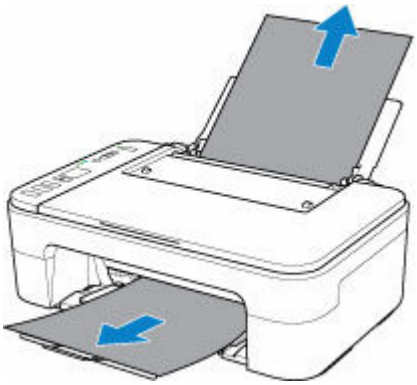

   Note

   - If you cannot pull out the paper, turn the printer back on without pulling forcibly. The paper may be ejected automatically.
   - If paper becomes jammed during printing and you need to turn off the printer to remove it, press the **Stop** button to stop the printing before you turn off the printer.
   - If the paper tears and you cannot remove the jammed paper from the paper output slot or the rear tray, remove the paper from inside the printer.

     ➡ Paper Is Jammed inside Printer

2. Reload paper and press printer's **OK** button.

   The printer resumes printing. Reprint the page you were printing if it was not printed properly due to the paper jam.

   If you turned off the printer in step 1, the print data that was sent to the printer is erased. Redo the printing.

   Note

   - When reloading the paper, make sure you are using suitable paper and loading it correctly.
   - We recommend using paper sizes other than A5 to print documents with photos or graphics. A5 paper may curl and jam as it leaves the printer.

If the measures above do not solve the problem, contact your nearest Canon service center to request a repair.

Paper Is Jammed inside Printer

If the jammed paper tears and you cannot remove the paper either from the paper output slot or from the rear tray, or if the jammed paper remains inside the printer, remove the paper following the instructions below.

Note

- If the periphery of the paper output slot is dirty with ink, clean it before removing jammed paper.
- If paper becomes jammed during printing and you need to turn off the printer to remove it, press the **Stop** button to stop the printing before you turn off the printer.

1. Turn off the printer and unplug it.

2. Retract paper output tray and open cover.

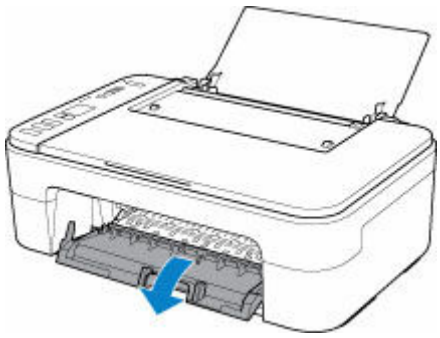

Important

- Do not touch clear film (A).

If you soil or scratch this part by touching it with paper or your hand, it could damage the printer.

3. Check if jammed paper is under FINE cartridge holder.

If the jammed paper is under the FINE cartridge holder, move the FINE cartridge holder to the far right or left, whichever makes it easier to remove the paper.

When moving the FINE cartridge holder, hold the FINE cartridge holder and slide it slowly to the far right or left.

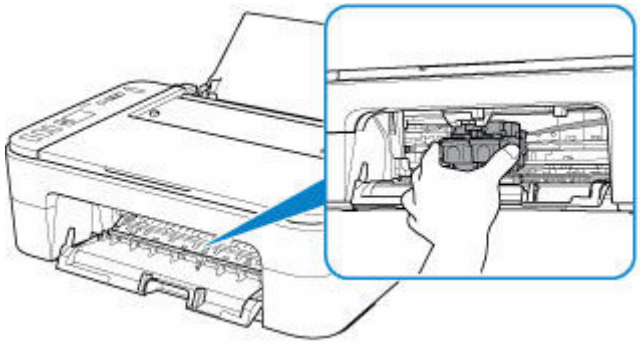

4. Hold jammed paper firmly in both hands.

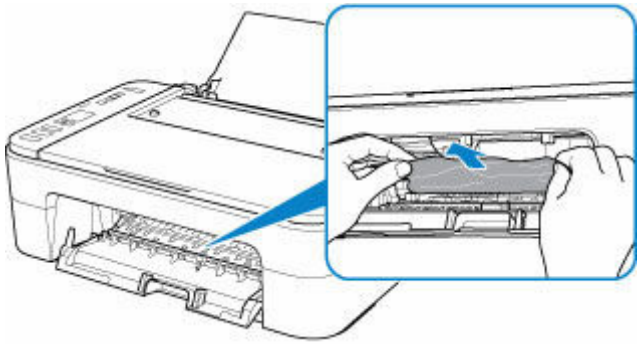

If the paper is rolled up, pull out it.

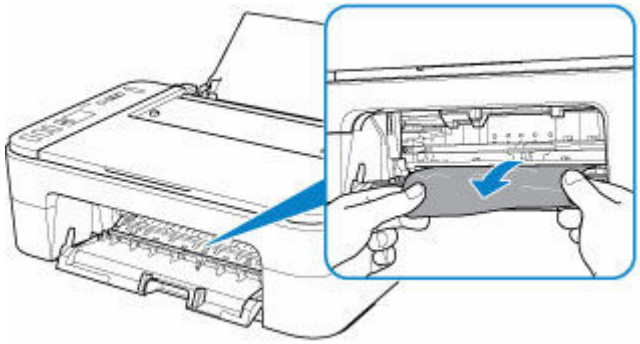

5. Slowly pull out paper, so as not to tear it.

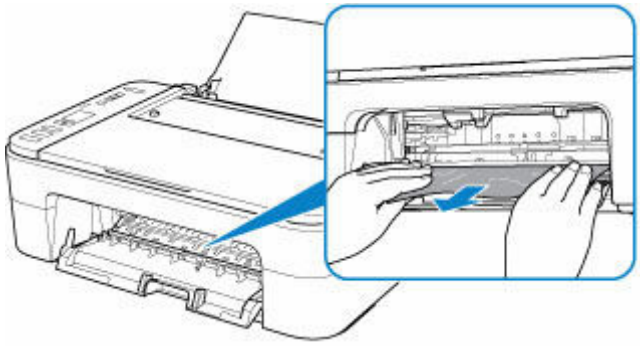

6. Make sure all jammed paper is removed.

If the paper tears when you pull out it, a bit of paper may remain in the printer. Check the following and remove any remaining paper.

- Any paper left under the FINE cartridge holder?
- Any small bits of paper left in the printer?
- Any paper left in the left and right empty spaces (B) in the printer?

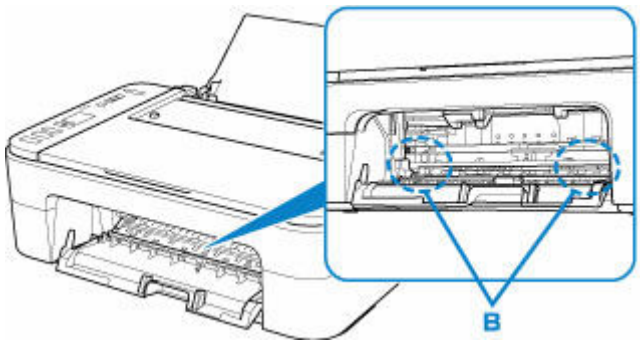

7. Close cover.

All jobs in the print queue are canceled. Redo the printing.

Note

- When reloading the paper, make sure you are using suitable paper and loading it correctly. If a paper jam message appears on your computer screen when you resume printing after removing all the jammed paper, there may be some paper still inside the printer. Check the printer again for any remaining bits of paper.

If the measures above do not solve the problem, contact your nearest Canon service center to request a repair.

Printer Is Out of Paper (1000)

Cause

Possible causes include the following.

- There is no paper in the rear tray.
- Paper is not loaded in the rear tray properly.

What to Do

Take the corresponding actions below.

- Load paper in the rear tray.

  ➡ Loading Plain Paper / Photo Paper

  Note

  - For print head alignment, load A4 or Letter-sized plain paper.

- Align the paper guides with the both edges of the paper.
- When the (Paper status) icon and the paper size flash on the printer's LCD, select the size of the paper loaded in the rear tray with the printer's **Paper Select** button.

  ➡ Paper Settings

After carrying out the above measures, press the printer's **OK** button.

Note

- To cancel printing, press the printer's **Stop** button.

1200

Cause

Cover is open.

What to Do

Close the cover and wait for a while.

Do not forget to close it, such as after replacing FINE cartridges.

1203

Cause

Cover is opened during printing.

What to Do

If paper remains inside the printer, slowly pull out the paper with both hands and close the cover.

Press the printer's **OK** button to resolve the error.

The printer ejects one blank sheet of paper and resumes printing from the next paper.

The printer will not reprint the page that was printed when the cover is opened. Retry printing.

Important

- Do not open or close the cover during printing, as this can damage the printer.

1401

Cause

FINE cartridge is not installed.

What to Do

Install the FINE cartridge.

If the error is not resolved, the FINE cartridge may be damaged. Contact your nearest Canon service center to request a repair.

1430

Cause

FINE cartridge cannot be recognized.

What to Do

Remove the FINE cartridge and reinstall it.

If the error is not resolved, the FINE cartridge may be damaged. Replace the FINE cartridge with a new one.

If the measures above do not solve the problem, contact your nearest Canon service center to request a repair.

1485

Cause

Appropriate ink cartridge is not installed.

What to Do

Printing cannot be executed because the ink cartridge is not compatible with this printer.

Install the appropriate ink cartridge.

If you want to cancel printing, press the printer's **Stop** button.

1682

Cause

FINE cartridge cannot be recognized.

What to Do

Replace the FINE cartridge.

If the error is not resolved, the FINE cartridge may be damaged. Contact your nearest Canon service center to request a repair.

1686

Cause

The ink may have run out.

What to Do

The function for detecting the remaining ink level will be disabled since the ink level cannot be correctly detected.

If you want to continue printing without this function, press the printer's **Stop** button for at least 5 seconds.

Canon recommends to use new genuine Canon cartridges in order to obtain optimum qualities.

Please be advised that Canon shall not be liable for any malfunction or trouble caused by continuation of printing under the ink out condition.

1688

Cause

The ink has run out.

What to Do

Replace the ink cartridge and close the cover.

If printing is in progress and you want to continue printing, press the printer's **Stop** button for at least 5 seconds with the ink cartridge installed. Then printing can continue under the ink out condition.

The function for detecting the remaining ink level will be disabled.

Replace the empty ink cartridge immediately after the printing. The resulting print quality is not satisfactory, if printing is continued under the ink out condition.

FINE Cartridge is Not Installed (168A)

Cause

Possible causes include the following.

- FINE cartridge is not installed or may not be installed properly.
- FINE cartridge incompatible with this printer is installed.

What to Do

If FINE cartridges are not installed, install the appropriate FINE cartridges properly.

Note

- In the case of the first printer setup, click here, select your printer name on the page, and follow the instructions.

If FINE cartridges are already installed, store the output tray extension and the paper output tray, open the cover, and then remove the FINE cartridges.

Make sure that the FINE cartridges are compatible with this printer.

Then install the FINE cartridges again.

➡ Replacing a FINE Cartridge

Push up the FINE cartridge until it clicks into place.

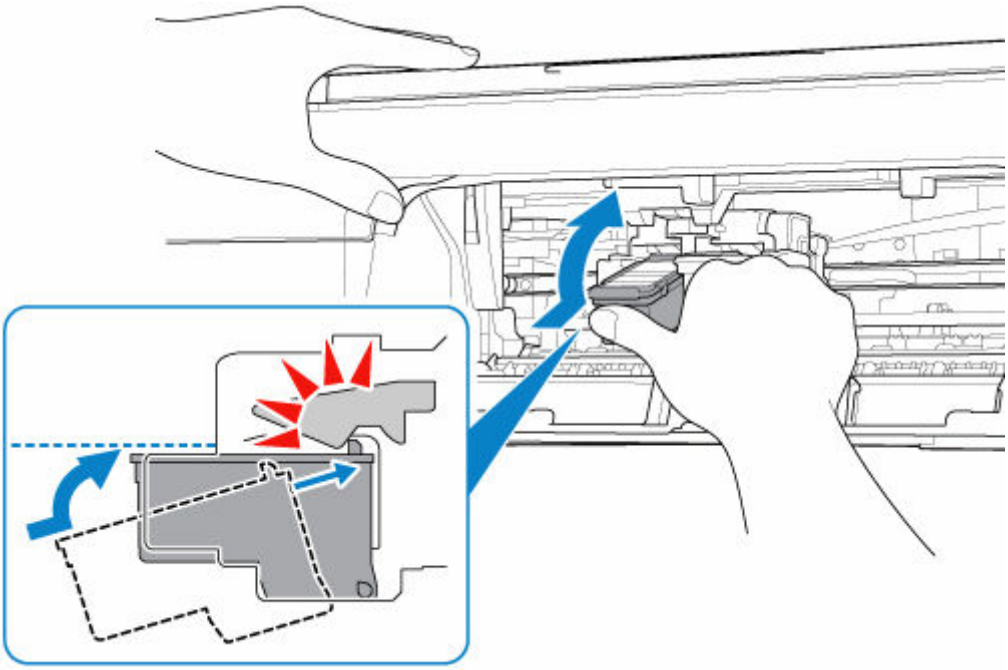

After installing, close the cover.

1700

Cause

Ink absorber is almost full.

What to Do

Press the printer's **OK** button to continue printing. Contact your nearest Canon service center to request a repair.

Note

- In the case of warnings or errors caused by remaining ink levels, the printer cannot print or scan.

Shipping Tape etc. Are Still Attached (1890)

Cause

Shipping tape or protective material may still be attached to FINE cartridge holder.

What to Do

Store the output tray extension and the paper output tray, open the cover, and make sure that shipping tape and protective material have been removed from the FINE cartridge holder.

If the shipping tape or protective material is still there, remove it and close the cover.

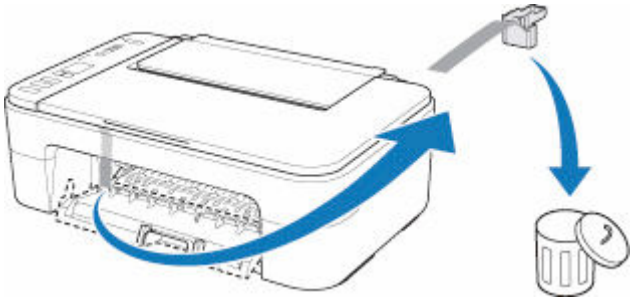

In the case of the first printer setup, click here, select your printer name on the page, and follow the instructions.

2114

Cause

Paper size settings at printer driver do not match the paper size registered in the printer.

What to Do

Press the printer's **Stop** button to cancel printing.

Check if the size of the paper loaded in the rear tray matches the paper size registered in the printer using the printer's **Paper Select** button.

After checking the paper settings set at the printer driver, retry printing.

Note

- If the paper size loaded in the rear tray is larger than the paper size set at the printer driver, you can continue the printing without changing the paper size settings. Press the printer's **OK** button.
- See below for paper sizes that can be registered in the printer using the printer's **Paper Select** button.

  ➡ Paper Settings

- You can disable the function to prevent printing error. When this function is disabled, the printer uses the paper settings for printing onto the paper in the rear tray regardless of whether or not the paper matches these settings.

  See below for the printing error prevention setting.

  ➡ Changing the Printer Operation Mode (Windows)
  ➡ Changing the Printer Operation Mode (macOS)

2900

Cause

Scanning print head alignment sheet failed.

What to Do

Press the printer's **OK** button and check the following.

- Make sure the print head alignment sheet is set in the correct position and orientation on the platen.
- Make sure the platen and the print head alignment sheet are not dirty.
- Load A4 or Letter-sized plain paper in the rear tray.
- Make sure that the print head nozzle is not clogged by printing the nozzle check pattern.

After checking the above, start auto print head alignment again.

If the error is still not resolved, press the printer's **OK** button to cancel the error, load A4 or Letter-sized plain paper in the rear tray, and try manual print head alignment.

2901

Cause

Print head alignment pattern has been printed and printer is waiting to scan sheet.

What to Do

Scan the printed alignment pattern.

1. Load print head alignment sheet on platen.

   Place the printed side down and align the mark ◤ in the upper left corner of the sheet with the alignment mark ⇲.

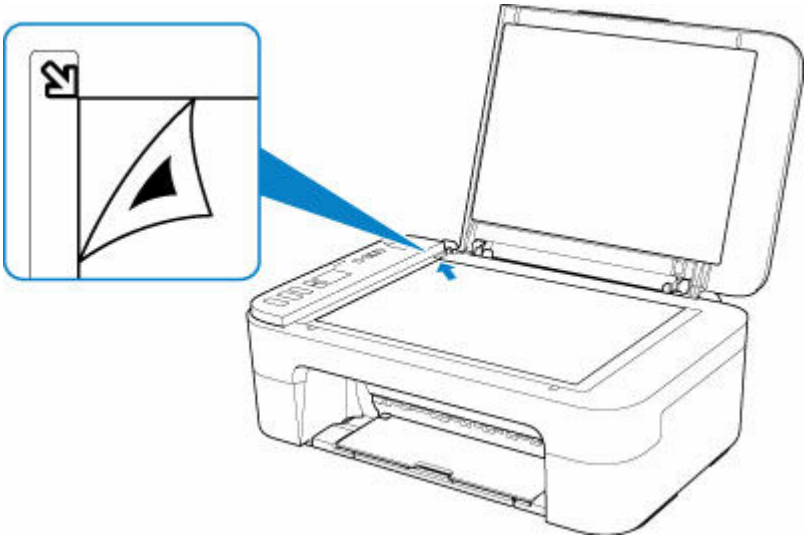

2. Slowly close the document cover and press printer's **Black** or **Color** button.

   The printer starts scanning the print head alignment sheet, and automatically adjusts the print head position.

4102

Cause

Media type and paper size are not set correctly.

What to Do

Press the printer's **Stop** button to cancel printing, change the media type or paper size setting, and then retry printing.

- When the media type is set to Photo Paper Plus Glossy II:

  Set the paper size to 4" x 6" (10 x 15 cm), 5" x 7" (13 x 18 cm), or Square 5" x 5" (13 x 13 cm).

- When the media type is set to Glossy Photo Paper:

  Set the paper size to 4" x 6" (10 x 15 cm).

4103

Cause

Cannot perform printing with current print settings.

What to Do

Press the printer's **Stop** button to cancel printing.

Then change the print settings and retry printing.

5011

Cause

Printer error has occurred.

What to Do

Turn off the printer and unplug it.

Plug in the printer again and turn it back on.

If this does not solve the problem, contact your nearest Canon service center to request a repair.

5012

Cause

Printer error has occurred.

What to Do

Turn off the printer and unplug it.

Plug in the printer again and turn it back on.

If this does not solve the problem, contact your nearest Canon service center to request a repair.

5100

Cause

Printer error has occurred.

What to Do

If you are printing, press the printer's **Stop** button to cancel printing, then turn off the printer.

Check the following:

- Make sure FINE cartridge holder motion is not impeded by stabilizer, jammed paper, etc.

  Remove any impediment.

  Important

  - When clearing an impediment to FINE cartridge holder motion, be careful not to touch clear film (A).

    If you soil or scratch this part by touching it with paper or your hand, it could damage the printer.

- Make sure the FINE cartridges are properly installed.

  Push up the FINE cartridge until it clicks into place.

Turn the printer back on.

If this does not solve the problem, contact your nearest Canon service center to request a repair.

5200

Cause

Printer error has occurred.

What to Do

Turn off the printer and unplug it.

After a while, plug in the printer again and turn it back on.

If this does not solve the problem, contact your nearest Canon service center to request a repair.

5B00

Cause

Printer error has occurred.

What to Do

Contact your nearest Canon service center to request a repair.

Note

- In the case of warnings or errors caused by remaining ink levels, the printer cannot print or scan.

6000

Cause

Printer error has occurred.

What to Do

If the paper is jammed, remove it depending on the jammed location and cause.

➡ List of Support Code for Error (Paper Jams)

Turn off the printer and unplug it.

Plug in the printer again and turn it back on.

If this does not solve the problem, contact your nearest Canon service center to request a repair.