Canon

CX-G2400

COLOR CARD PRINTER

User's Guide

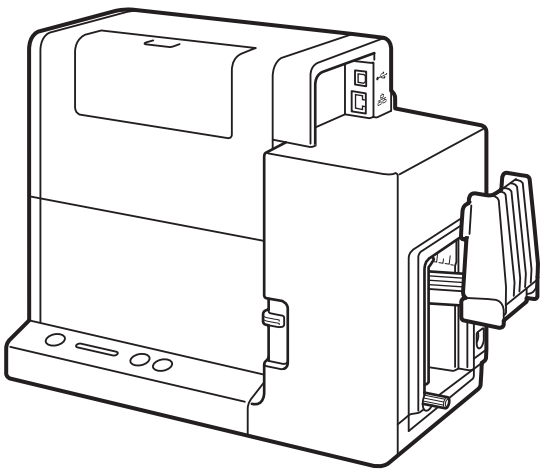

© CANON FINETECH NISCA INC. 2017-2018

4Y1-8613-020

Table of Contents

Before You Begin

- Conventions iv
- Sample Screens iv
- Trademarks iv
- Abbreviations v
- Important Notices v
- Legal Notice v

1. Basic Operation

- Names and Functions of Components 2
  - External View 2
  - Internal View 3
  - Transport Unit 4
  - Operation Panel 5
- Turning the Printer On/Off 7
  - How to Turn the Printer On 7
  - How to Turn the Printer Off 8
  - Changing the Power Settings 9
- Loading the Paper 13
- How to Print 24
  - Making Prints 24
  - Cancel Printing 30
- Configuring Print Settings 31
  - Opening the Printer Driver 31
  - Printer Driver Setup Window Configuration 34

2. Printing

- Printing with the Custom Paper Size 42
- Setting Micro Margin Printing 47
  - Adjusting the Print Position 47
  - Adjusting the Trimming Position 49
- Changing Print Quality and Adjusting Color 55
  - Changing Print Quality Setting 55
  - Printing with the Color Correction Method Changed 57
  - Printing in Black and White 58
  - Print the Gradation Smoothly 59
  - Setting the Sharpness 61
  - Adjusting the Color Balance 63
  - Adjusting the Density 65
  - Adjusting the Brightness or Contrast 67
- Carrying out Overlay Printing 70
  - Printing a Form to a File 71
  - Carrying out Overlay Printing 73
- Setting Paper Feed Speed 76
  - Accelerating Printing on the 1st Sheet of Paper 76
  - Adjusting the Paper Feed Speed 77
- Registering Frequently Used Print Settings 79
- Changing the Special Settings of the Printer 83
- Registering Paper Type 87

3. Maintenance

- Checking the Printer Status 92
  - How to Start and Display the Status Monitor 93
- Replacing the Ink Tank 95
  - Replacing the Ink Tank 95
  - Checking the Ink Information 101
- Replacing the Maintenance Cartridge 102
  - Replacing the Maintenance Cartridge 102
  - Checking the Status of the Maintenance Cartridge 108
- Cleaning the Print Head 109

Normal Cleaning (Light Cleaning) 109
Strong Cleaning 111
Adjusting Print Head Position 113
Checking the Setting Values 126
Cleaning the Printer 128
Cleaning the exterior of the printer 128
Cleaning the Transport Unit 130
Cleaning the Pick-up Roller 143

4. Troubleshooting

For Troubleshooting Operations 148
Status Lamp Lights up Orange 148
Status Lamp Is Flashing Orange 150
Power Does not Turn on 151
Printing Does not Start/Complete 151
Paper Does not Feed Properly 154
Improving the Print Quality 155
Paper Is Jammed 159
List of Error Messages/Warning Messages 165
Error Message 166
Warning Message 172

5. Appendix

Moving the Printer 176
Moving the Printer Indoors 176
Shipping the Printer 179
Uninstall Printer Driver 185
About Network Utility 187
Starting the Network Utility 187
Configuring the Network 188
Configuring Network Using the Network Utility ... 199

Specifications 202

Index 204

Before You Begin

Conventions

WARNING

Indicates a warning concerning operations that may lead to death or injury to persons if not performed correctly. To use the machine safely, always pay attention to these warnings.

CAUTION

Indicates a caution concerning operations that may lead to injury to persons if not performed correctly. To use the machine safely, always pay attention to these cautions.

IMPORTANT

Indicates operational requirements and restrictions. Be sure to read these items carefully to operate the machine correctly, and avoid damage to the machine or property.

NOTE

Indicates a clarification of an operation, or contains additional explanations for a procedure. Reading these notes is highly recommended.

Indicates an operation that must not be performed. Read these items carefully, and make sure not to perform the described operations.

Sample Screens

The sample CX-G2400 printer driver screens displayed in this manual were created with Windows 10.

Trademarks

- Canon and the Canon logo are registered trademarks of Canon Inc.
- Microsoft and Windows are trademarks or registered trademarks of Microsoft Corporation in the United States and/or other countries.
- Adobe and Acrobat are trademarks or registered trademarks of Adobe Systems Incorporated in the United States and/or other countries.
- Other brand and product names may be trademarks or registered trademarks of their respective companies.

Abbreviations

Throughout this document the following abbreviations are used in text.

- Microsoft Windows 10 is abbreviated as "Windows 10"
- Microsoft Windows 8.1 is abbreviated as "Windows 8.1"
- Microsoft Windows 7 is abbreviated as "Windows 7"
- Microsoft Windows is abbreviated as "Windows"

Important Notices

- Copying this manual or any part of this manual without permission is strictly forbidden.
- The specifications for this printer and software provided with the printer are subject to change without prior notice.
- We have done our best to make this manual as complete and accurate as possible, and we ask you to contact your place of purchase. If you find any omissions or mistakes in this manual.
- We can accept no responsibility for loss or damages resulting from the use of this printer or its software; please accept this before you use the printer.

Legal Notice

Legal Limitations on the Usage of Your Product and the Use of Images

- It is illegal to reproduce currency, bills, negotiable securities and other documents prohibited by law. Reproduction of such items may be subject to criminal prosecution.
- It is illegal to reproduce legal certificates, licenses, and certain public and private documents prohibited from reproduction by law. Reproduction of such items may be subject to criminal prosecution.
- Please note that intellectual property protected by copyright may not be reproduced without the express permission of the copyright holder except for personal or household use under limited circumstances.

Product Name

CX-G2400

Chapter 1

Basic Operation

This chapter describes basic things to remember before using this product.

Names and Functions of Components 2

Turning the Printer On/Off 7

Loading the Paper 13

How to Print 24

Configuring Print Settings 31

Names and Functions of Components

External View

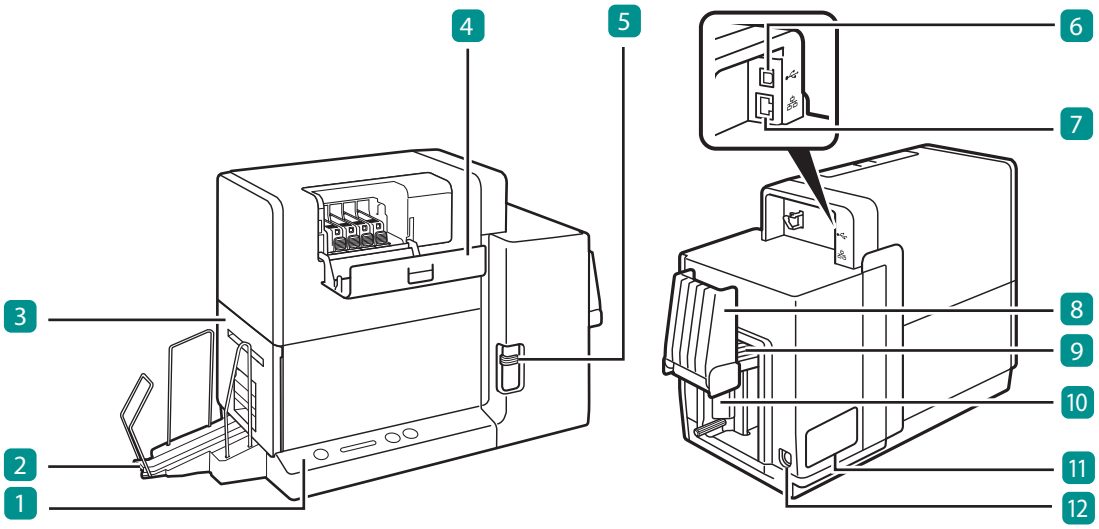

1 Operation Panel (P.5)
Keys for selecting printer operations and lamps indicating printer statuses are provided on this panel.

2 Stacker
Receives printed media output from the printer.

3 Transport Unit (P.4)
Pull this unit out when clearing paper jams or adjusting the paper guides.

4 Ink Tank Cover
Open this cover when replacing ink tanks.

5 Paper Switch Lever
Switch the lever position according to the thickness of the paper to be set.

6 USB Connector
Connect a USB cable to this connector.

7 LAN Connector
Connect a LAN cable to this connector.

8 Auxiliary Tray
Open the tray to set paper. During use, keep the tray closed. When long sheets of paper (paper length of 157 mm (6.18 inch) or longer) is set, keep the tray open during use.

9 Feeder Lift Tray
Load the paper.

10 Side Guide
Adjust the position of this guide according to the media width.

11 Rating Plate

A serial number for identifying the printer is shown on this plate.
(The serial number is required when you contact customer support or require any sort of printer repairs.)

12 Power Socket

Connect the supplied AC adapter to this socket.

IMPORTANT

- While the printer is operating, do not open the ink tank cover or the transport unit lever. It could cause a printer failure.

Internal View

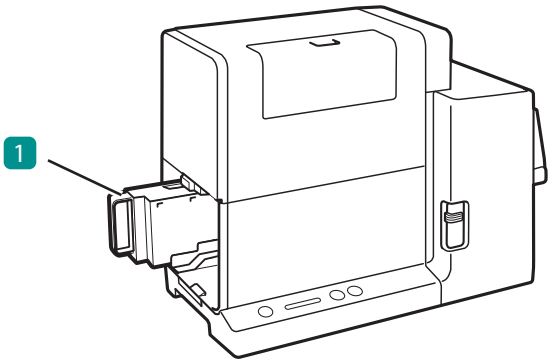

1 Maintenance Cartridge

Ink used to clean printhead is collected in this cartridge.

Transport Unit

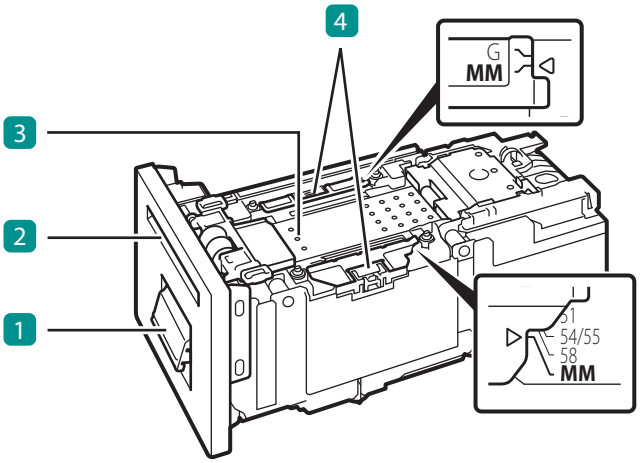

1 Transport Unit Lever

Open this lever to pull the transport unit out.

2 Ejection Slot

Printed paper is ejected through this slot.

3 Transport Belt

Transports paper here.
Clean the transport area when stained with paper dust and ink. (P.136)

4 Paper Guide

This guide holds the paper down to keep it from floating. Normally, set the lever to the MM position for use.
If the guide is stained with paper dust or ink, clean it. (P.130)

Operation Panel

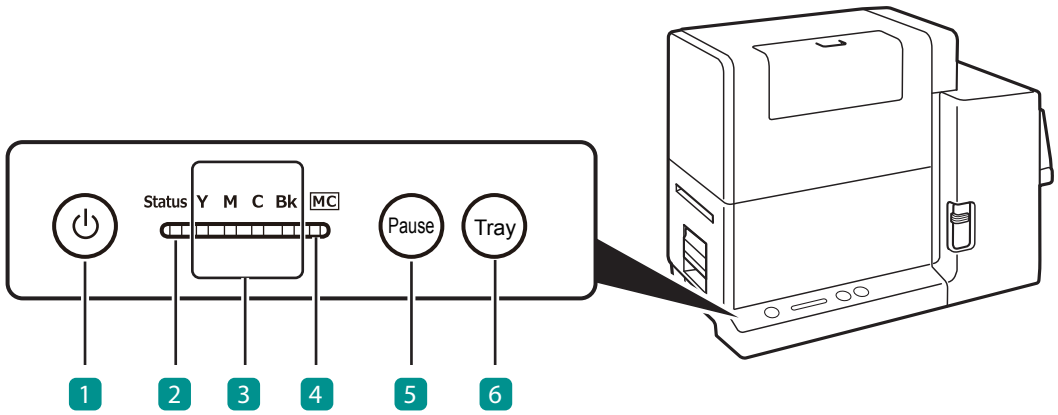

1 Power Key/Lamp

Press this key to turn on/off the printer. This lamp lights up or blinks depending on the power supply status.

On: The printer is powered on.
Blink: The printer is in sleep mode (power-saving mode).
Off: The printer is powered off.

2 Status Lamp

This lamp lights up or blinks green or orange.

Lit (green): Printing from the computer is possible (online mode).

Blink (green): The printer is processing or operating (printing, cleaning, etc.)

Lit (orange): An operator call error has occurred.

Blink (orange): A service call error has occurred.

Off: Instructions and print data cannot be received from the computer (offline mode).

3 Ink Lamps (Bk/C/M/Y)

Each lamp lights up or blinks when the corresponding ink tank is out of ink or short of ink.

Lit: There is no ink available for printing or the ink tank is faulty.

Blink: The ink tank is low.
Off: The ink tank is full.

4 Maintenance Cartridge Lamp

This lamp lights up or blinks when there is limited space to collect ink in the maintenance cartridge.

Lit: The maintenance cartridge is full or faulty.
Blink: The maintenance cartridge has limited space.
Off: The maintenance cartridge has free space.

5 Pause Key

Press this key to switch between online and offline modes.
When printing is in progress, pressing this key stops printing temporarily. Pressing this key again resumes printing.

6 Tray Key

Use this key to move the feeder lift tray upward/ downward.

NOTE

- When the printer is in the sleep mode, the Status lamp, Ink Lamps, and Maintenance Cartridge Lamp will remain off regardless of the statuses of the printer, ink tanks, and maintenance cartridge.

Turning the Printer On/Off

How to Turn the Printer On

1 Press the Power key.

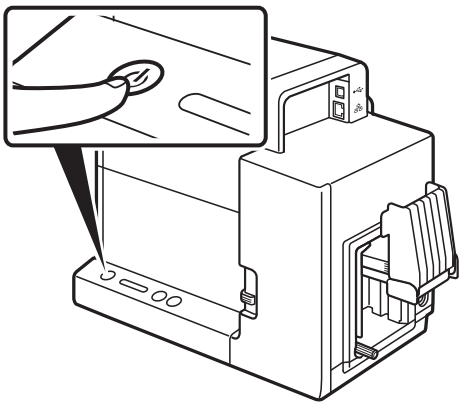

- The status lamp will blink (green), and then light up.

NOTE

- **About the Sleep Timer** (P.9)
  The printer will automatically enter sleep mode when a predetermined amount of time elapses without printing. By default, the time is set to 4 minutes.

How to Turn the Printer Off

1 Make sure all print jobs are complete.

When the Status lamp is blinking (green), the printer is operating. Make sure the Status lamp lights up (green) before turning off the printer.

2 Press and hold the Power key until the Status lamp turns off.

When the Status lamp is off, press and hold the Power key for at least 1 second.

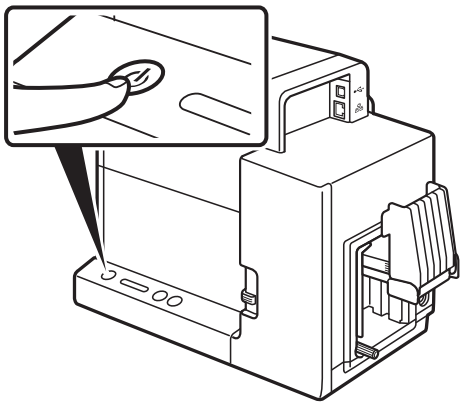

- When the Power lamp stops blinking, the printer is turned off.

IMPORTANT

- After powering the printer down, make sure the power lamp is off prior to unplugging the power cord.
- If the printer will not be used for a long period of time, disconnect the power cord, AC adapter, and interface cable.

NOTE

- **About the Off Timer** (P.11)
  After switching to sleep mode, if the printer is not in use for 240 minutes (4 hours), the printer will automatically turn off.

Changing the Power Settings

Placing the Printer in Sleep Mode

IMPORTANT

- When printing is in progress or an error has occurred, the printer cannot be switched to sleep mode.

NOTE

- The printer is automatically switched back from sleep mode to online in the following cases:
  - When the Power key is pressed
  - When print data is received
  - When cleaning, etc. is performed

1 Make sure the printer is online. (the Status lamp is lit (green).)

If the printer is offline (the Status lamp is off), press the Power key to switch the printer back to online.

2 Open the printer driver setup window. (P.31)

3 Switch the printer to the sleep state.

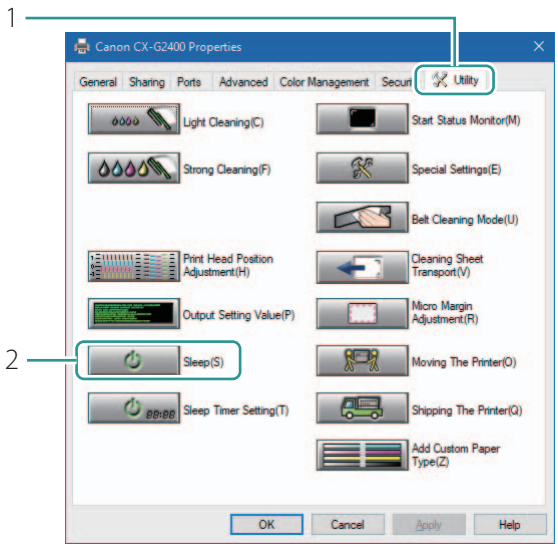

1. Click the [Utility] tab.
2. Click [Sleep].
   - A confirmation message appears.

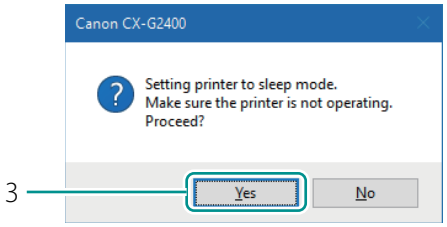

3. Confirm the message, and then click [Yes].
   - The Power lamp blinks slowly, and the printer is switched to sleep mode.

Changing the Sleep Timer/Off Timer Setting

If the printer is not operated for a predetermined amount of time, it can automatically switch to the sleep state (sleep timer), or automatically turn off (off timer).

IMPORTANT

- Administrative privileges over this printer are required to configure sprinter settings.
  If a user without administrative privileges proceeds with configuration of settings, a message "You do not have rights to printer management. Please contact your system administrator." appears.
  For more details, see "Administrative privileges required for certain features (P.40)".
- When printing is in progress or an error has occurred, you cannot change the set time.

NOTE

- By default, the sleep timer is set to 4 minutes and the off timer is set to 240 minutes, (4 hours).
- For the off timer, set how much time must elapse after switching to sleep mode before the printer is turned off.

1 Make sure the printer is online. (the Status lamp is lit (green).)

If the printer is offline (the Status lamp is off), press the Power key to switch the printer back to online.

2 Open the Properties window of the printer driver. (P.32)

3 Set the sleep timer.

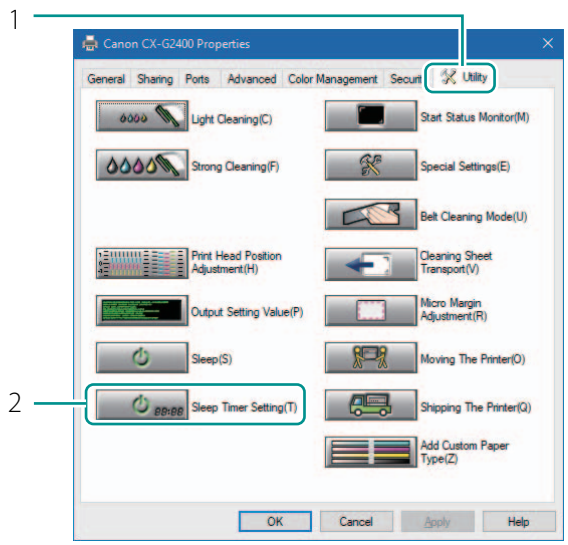

1. Click the [Utility] tab.

2. Click [Sleep Timer Setting].

- The [Sleep Timer Setting] dialog box appears.

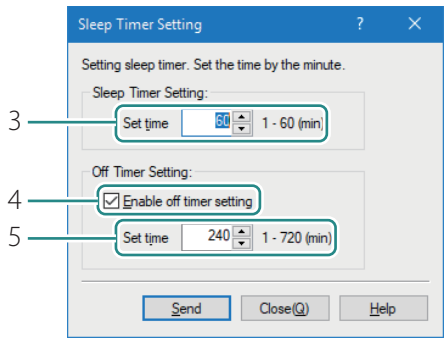

3. Enter the setting time of the sleep timer.

- The time can be set in minutes within the range from 1 to 60 (min).

4. Enter the setting time of the off timer.

- The time can be set in minutes within the range from 1 to 720 (min).
- If the off timer is not necessary, uncheck the [Enable off timer setting] check box.

5. Click [Send].

- A confirmation message appears.

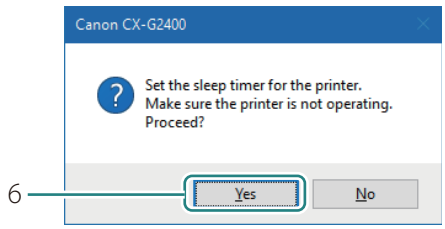

6. Confirm the message, and then click [Yes].

Loading the Paper

IMPORTANT

- Use the dedicated paper. Using other paper could cause blurred or faint printing or have a negative impact on the printer, resulting in a printer failure.

NOTE

- The following types of paper can be used with this printer:
  - Matte Coated Paper
  - Glossy paper
  - Plastic card

  Please contact your place of purchase for paper specifications and availability.

1 Make sure the Power lamp is lit.

If the Power lamp is off, press the Power key to turn the printer on. (P.7)

2 Set the paper switch lever.

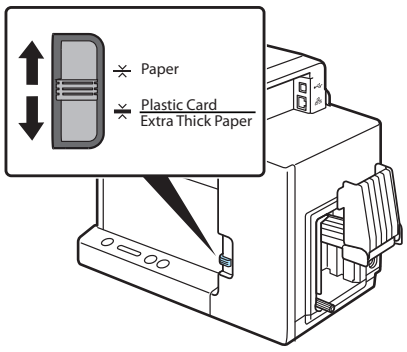

- Set the lever to the appropriate position according to the paper to be printed on.

  Plastic card or extra thick paper:
  Set it to [Plastic Card/Extra Thick Paper]

  Paper other than above:
  Set it to [Paper]

IMPORTANT

- Paper will not be fed properly if the paper switch lever is not in the appropriate position.

3 Lower the feeder lift tray.

If the feeder lift tray is already lowered, proceed to step **4**.

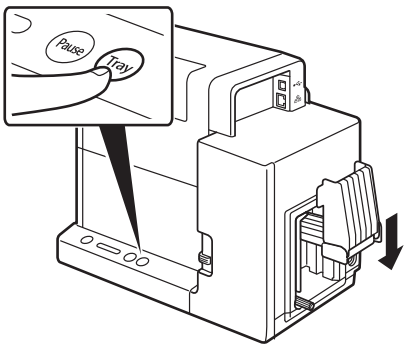

1. Press the Tray key.

- Wait for the feeder lift tray to stop.

CAUTION

- Do not touch the feeder lift tray when it is moving. Do not insert your hand or place objects below the tray. Doing so can cause an injury or malfunction.

4 Remove the paper from its packaging.

- For business card or card

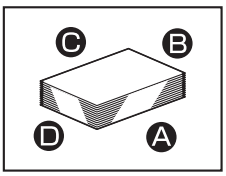

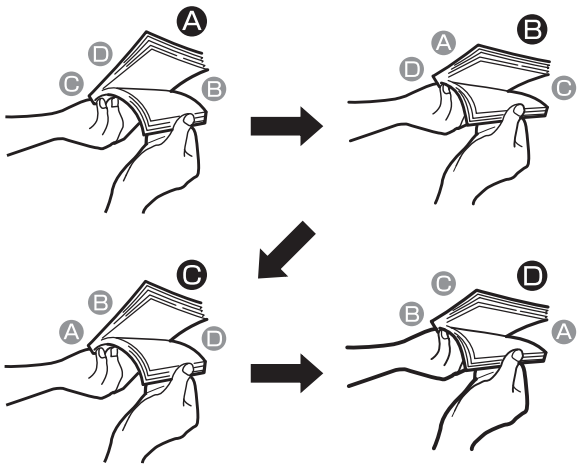

(Fig.1)

(Fig.2)

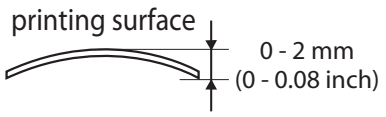

1. Flip through the four sides of the paper to separate the sheets.

- As shown in the figure, flip through the four sides (a, b, c, and d) of the paper thoroughly to remove paper dust.
- Loading the paper after flipping through it prevents multiple sheets from being fed at once.

2. Check the paper curl.

- As shown in the figure, if the paper is placed with the printing surface facing up and the paper is curled upward (Fig.1), fix the curl so that the paper is flat.
  If the paper is curled downward (Fig.2), flatten the paper so that the curl does not exceed 2 mm (0.08 inch).
- Paper that is curled upward can cause paper jams or printing surface rubbing. If the paper is curled, bend in the direction opposite to the curl in order to flatten it.

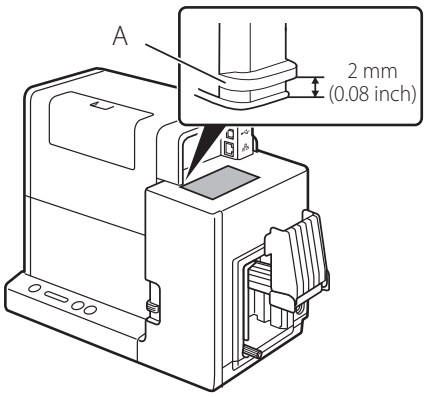

- It is possible to check the amount of curl in paper that is curled downward with the curl index (A).
  When you place the paper with the printing surface facing down as shown in the figure, check that the index is not exceeded (the curl is 2 mm (0.08 inch) or less).

- For plastic card

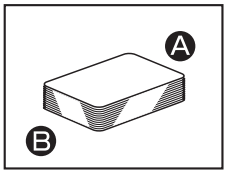

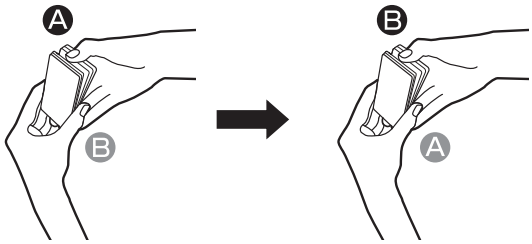

1. Flip through the two short edges of the card to separate the cards.

- When flipping through the card, do not touch the printing surface with your fingers.
- Flip through the two short edges of the card thoroughly. If you have difficulty flipping through the cards, flip through small numbers of cards at a time.
- Loading the card after flipping through it prevent multiple cards from being fed at once.

IMPORTANT

- Depending on the operating environment paper jams or printing surface rubbing may occur. In such a case, adjust the paper guides to the paper width.
  However, when the paper guides are adjusted to the paper width, micro margin printing is not possible. (P.163)

5 Load paper.

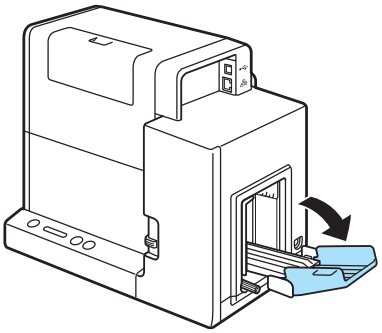

1. Open the auxiliary tray.

- If there is paper in the feeder slot, remove it.

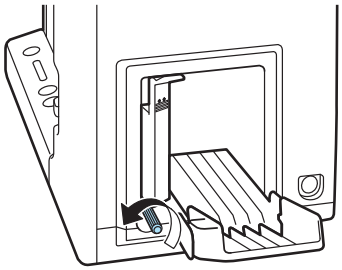

2. Loosen the side guide screw.

- Please note, if the screw its turned too much, it will come off.

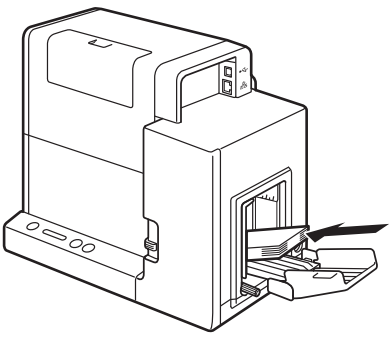

3. Load the paper so that the furthest edge touches the back of the feeder lift tray.

- Align the paper neatly before loading.
- If the paper has front and back sides, the side that you want to print on must face up.
- If the side guides are too narrow, pull them outward and then load the paper.

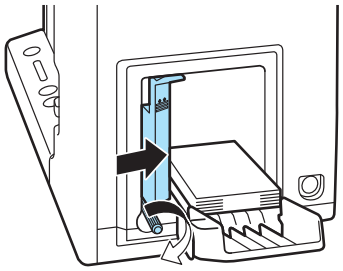

4. Adjust the side guides to the paper edge, and secure them in place with the screw.

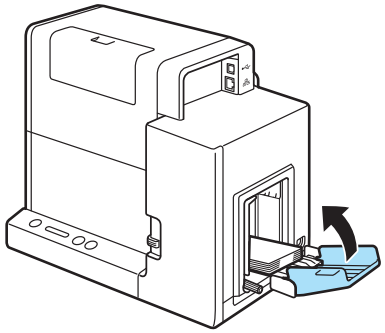

5. Close the auxiliary tray.

- For long sheets of paper (paper length of 157 mm (6.18 inch) or longer):

  You do not need to close the auxiliary tray.

IMPORTANT

- Align the edges before loading. Not doing so can cause paper jams.

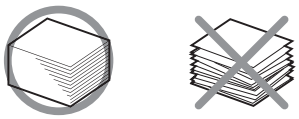

- Check that the height of the paper stack is not exceeding the load limit mark.

  Paper length of 91(3.58 inch) mm or less (business card, etc.):
  Can be set up to the load limit mark (arrow) (B).

  Paper length of 157 mm (6.18 inch) or longer:
  Can be set up to the load limit mark (line) (C).

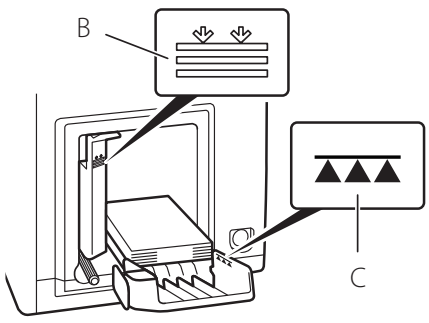

- If a paper feed error occurs, reduce the number of sheets loaded in the tray.
- If the paper is not touching the back of the feeder lift tray, the paper may not be fed properly.
- Fix the side guides in place so that they gently touch the edges of the paper. If they are set too tightly against the paper, the paper may not be fed properly.
- When changing the paper size, adjust the width of the side guides according to the width of the paper. If they are not set properly, the paper may not be fed properly.
- When loading paper, close the auxiliary tray. When loading longer paper (paper length of 157 mm (6.18 inch) or longer) there is no need to close the auxiliary tray.
- When printing on longer paper (paper length of 157 mm (6.18 inch) or longer), remove the printed paper frequently. Continuing to print without removing the printed paper can cause paper jams or printing failure.

6 Raise the feeder lift tray.

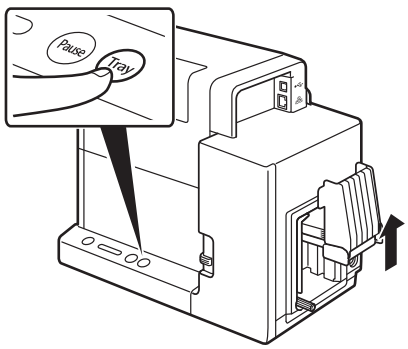

1. Press the TRAY key.

- Wait for the feeder lift tray to stop.
- If the power lamp is blinking, press the Power key to turn the printer on. (P.7)

CAUTION

- Do not touch the feeder tray lift when it is moving. Doing so can cause injury or malfunction.

IMPORTANT

- Do not adjust the side guides after the tray has been raised. Doing so can cause paper jams.

7 Check the paper guide positions.

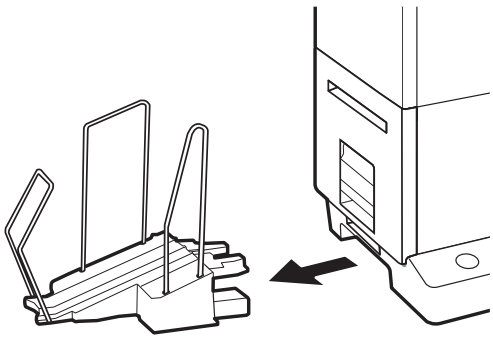

1. Remove the stacker if it is used.

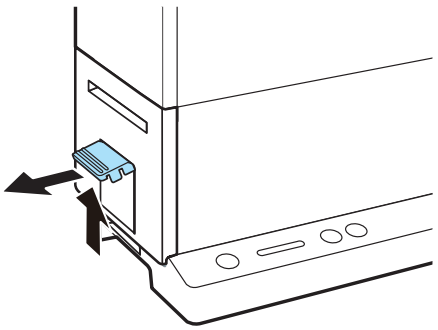

2. Raise the transport unit lever, and pull the transport unit out.

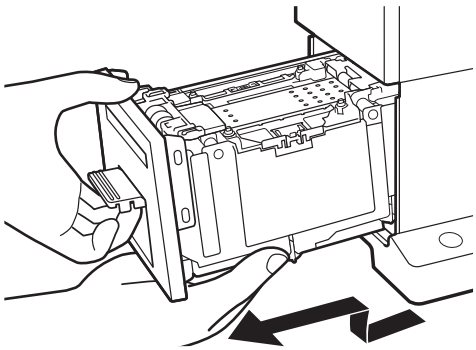

3. Pull the transport unit out with both hands as shown in the figure.

CAUTION

- When pulling the transport unit out of the printer, hold it firmly with both hands so it does not fall.
- Do not put your hands inside the printer. Failure or physical injury could result. Ink adhered inside of the printer could stain clothes or hands.

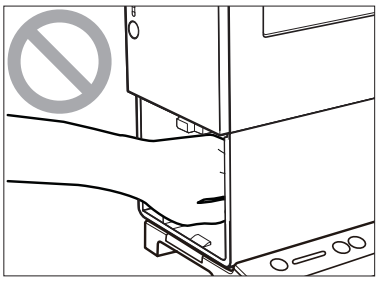

IMPORTANT

- When pulling the transport unit out of the printer or inserting it in the printer, be careful not to hit it strongly against the table or shelf. The surface of the table or shelf could be damaged.

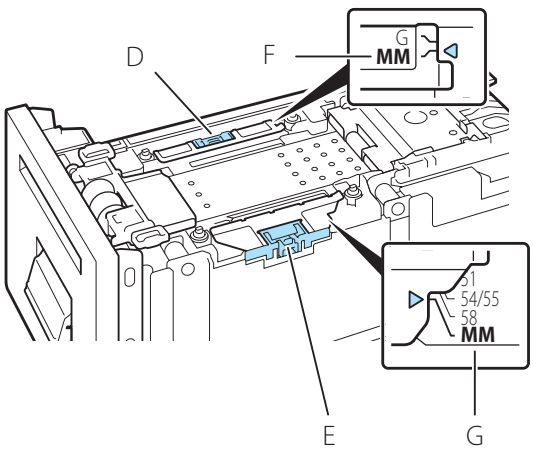

4. As shown in the figure, check that the paper guides are set to the MM position.

- While holding the paper guides (D and E) with your fingers, adjust them to the paper width indexes (F and G). For example, the figure on the left shows adjustment to guide position MM.

IMPORTANT

- When performing micro margin printing, be sure to set the paper guides to the MM position. Otherwise, the transport belt, paper guides, or other areas may be stained with ink. If a stain occurs, clean the transport unit. (P.130)
- Normally, there is no need to set the paper guides to positions other than MM.
  You only need to adjust the paper guides to the paper width when paper jams or printing surface rubbing does not improve. (P.21)

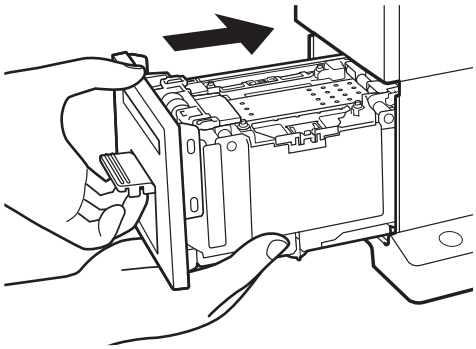

5. Slowly insert the transport unit as far as it will go.

- As you do this, be careful not to touch the paper guides doing so will change their positions.

CAUTION

- When returning the transport unit back inside the printer, be careful not to get your fingers caught between the transport unit and the inside of the printer.

6. Push the transport unit lever until it clicks.

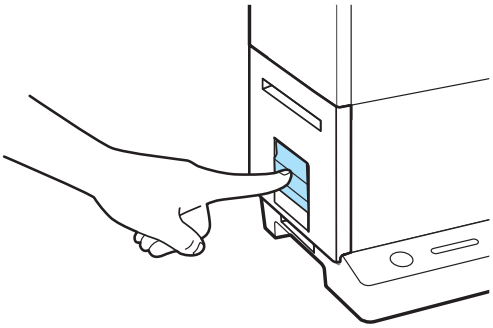

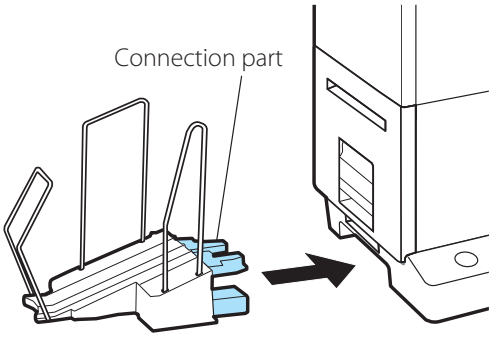

7. When using the stacker, install it back to the correct position.

- Insert the connection part of the stacker straight into the slot of the printer.

- For paper with the length of 91 mm (3.58 inch) or less

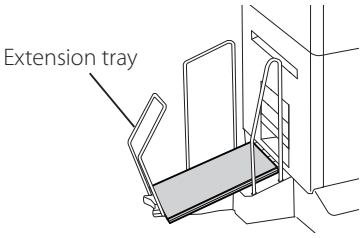

- For paper with the length of 157 mm (6.18 inch) or more

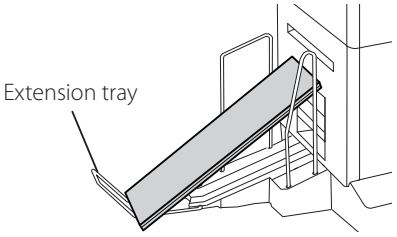

8. Set the extension tray according to the paper to be printed on.

- For paper with the length of 91 mm (3.58 inch) or less (business card, etc.), use the stacker with the extension tray at the standing position.
- For paper with the length of 157 mm (6.18 inch) or more, use the stacker with the extension tray at the open position.

IMPORTANT

- If the printer will not be used for a long period of time, remove paper from the printer to prevent it from discoloring and curl. Put the removed paper in its original plastic bag or box, and store it in a place which is not exposed to high temperature, high humidity, and direct sunlight.
- It is recommended that unpacked paper be used up first.
- If you change to paper of different type or size, change the printer driver setting. Printing on paper of a wrong size could make the stain on the transport belt, paper guides, or other areas. If the stain occurs, clean the transport unit. (P.130)
- Store the transport unit in the printer.
- Install the stacker on a platform such as a table on which the printer is installed.
- Be sure to insert the connection part of the stacker in all the way. If it is not attached properly, a paper jam may occur.
- To maintain print quality, do not attach or detach the stacker while the printer is running.
- Stacking capacity of the business card is 250 sheets. (thickness 0.245 mm (9.64 mil)) If the printer keeps running till the stacker is full, it may cause a paper jam.
- When printing pictures or characters on paper with the length of 91mm (3.58 inch) or less (business card, etc.), the edges of sheets of paper stacked in the stacker may not be aligned properly.
  To prevent paper jams, as a guideline, remove the printed paper when it reaches position A in the figure.

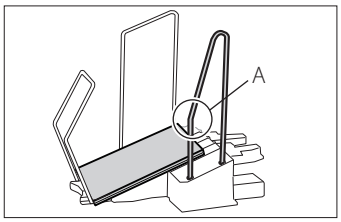

How to Print

Making Prints

This section explains how to micro margin printing using Business Card 55.0 x 91.0 mm (2.17 x 3.58 inch) Matte coated paper.

NOTE

- The micro margin printing is a function to print with a minimum margin (Top/Bottom/Left/Right: 0.3 mm (0.01 inch)).
- The printing procedure may be different depending on the application software you use. For more details, refer to the Instruction Manual that comes with your application software.
- Make sure that the Power Saver settings of the computer does not allow the computer to enter sleep mode during printing. The printer is designed to discard data received from the computer when the computer returns from a resting or sleep state to an operating state.
  Selecting "Never" in the Microsoft Windows Power Saver or Power Option settings will prevent the computer from entering a sleep state. Follow the procedure below to open the Windows Power Saver or Power Option settings.
  - Selecting Control Panel -> Hardware and Sound -> Power Options

  Refer to Microsoft Windows product documentation for instructions on adjusting your computer's power settings.

1 In the application software, set the paper size of the document.

IMPORTANT

- For instructions on how to check the paper size specified in the printer driver, refer to the Instruction Manual that comes with your application software.
- If you can set the margin on your application software, set all margins to “0.”

NOTE

- If the paper size cannot be obtained from the printer driver, follow the procedure below to set the document paper size. In micro margin printing, create the document larger than the actual paper size.

  - Document paper width

  Set the paper width 0.7 mm (0.03 inch) wider than the actual width.

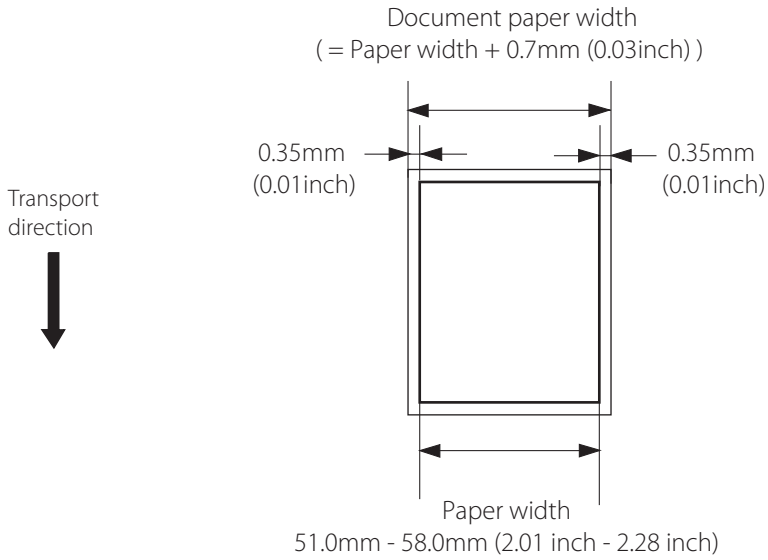

  - Document paper length

  When the 81.0 mm - 91.0 mm (3.19 inch - 3.58 inch):

  Set the paper length 1.1 mm (0.04 inch) longer than the actual length.

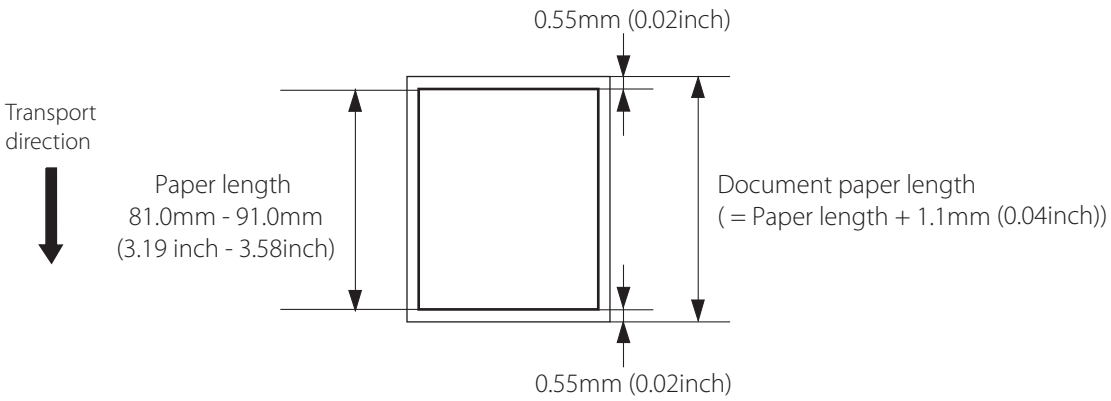

When the 157.0 mm - 172.0 mm (6.18 inch - 6.77 inch):

Set the paper length 1.7 mm (0.07 inch) longer than the actual length.

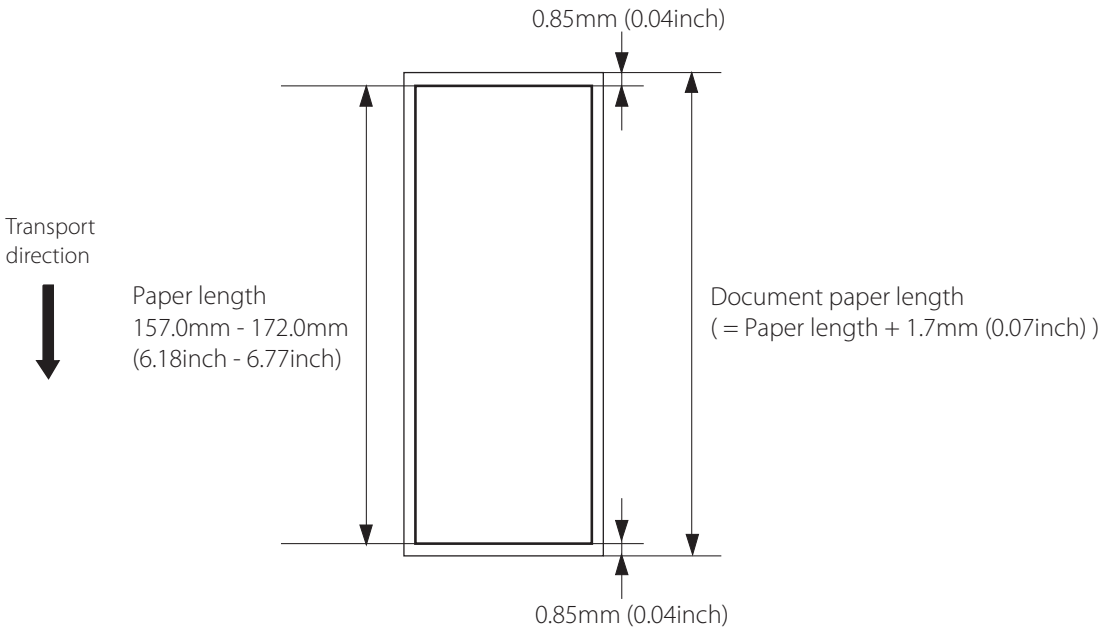

2 To the paper size, create a document.

IMPORTANT

- Printing does not take place in the region outside the printing area, which is, by default, 0.3 mm (0.01 inch) smaller on all sides than the actual paper size.

3 Open the document you want to print and then the [Print] dialog box.

Select [Print] from the [Files] menu (or the toolbar) of the application software.

4 Open the printer driver setup window.

Select [Canon CX-G2400], and then click [Preferences] or [Properties].

5 Set the paper size and type.

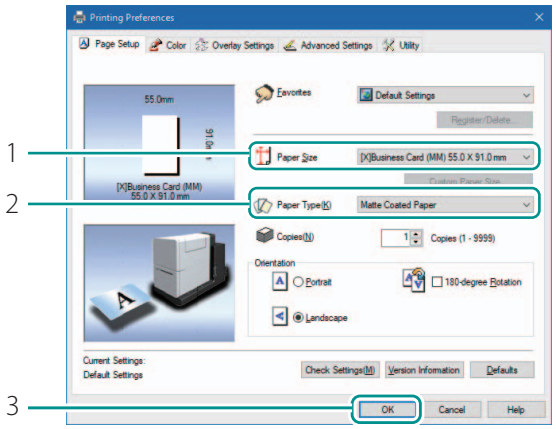

1. Select the paper size.
   - Select [[X]Business Card(MM) 55.0 x 91.0 mm].
2. Select the paper type.
   - Select [Matte].
3. Click [OK].
   - A confirmation message appears.

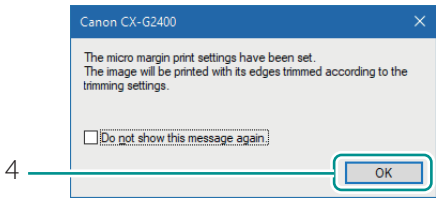

4. Click [OK].
   - Closing the printer properties window a displays message about the paper guide position. To prevent this message from being displayed, check the "Do not show this message again." check box and then click [OK].
   - To allow this message to be displayed again, you need to reinstall the printer driver. For the printer driver installation procedure, refer to the "Getting Started Guide."

IMPORTANT

- The mark in front of the paper size indicates the following. Select the paper size appropriate for the printing procedure.
  - [X] Paper size for micro margin printing (feature for printing with reduced margin)
  - [#] Paper size for micro margin printing on rounded corner paper
  - [ ] Paper size for normal printing

- Selecting the wrong paper size could stain the transport area and paper guides. If stain occurs, clean the transport unit. (P.130)

NOTE

- Selecting the wrong paper type could result in poor quality prints.

6 Click [Print] in the [Print] dialog box.

Printing will begin.

IMPORTANT

- While the printer is printing, keep the following precautions:
  - Do not open the ink tank cover and transport unit lever. It could cause a printer failure.
  - Do not give a shock or vibration to the printer. It could cause a paper jam or printing failure.
- Prior to starting printing, check that the paper set in the printer is the same as the paper set with the printer driver in terms of size, shape and type.
- Do not pull the paper during printing through the ejection slot. It could cause a printing failure.
- If the printer is turned off while it is operating (for example, the power plug or AC adapter is disconnected or a blackout occurs), do not draw out the transport unit immediately. Turn the printer on again before performing any operation. Drawing out the transport unit forcibly without turning the printer on again could cause a machine failure.
- If the application software and printer driver have the same setting items such as Paper Size, Orientation, and Copies, the settings made by the application software may be given priority.
- The print settings made by the application software are used only by this application software. To make print settings which can be commonly used by multiple application software, open the [Devices and Printers] folder. (P.32)
- If the paper size you want to select is not found in the list, set the Custom Paper Size (or the Customize). (P.42)
- Do not print outside the printable area of the selected paper.
- For details setting of micro margin printing, refer to "Setting Micro Margin Printing (P.47)".

NOTE

- **Checking the Current Printing Status.**

  The status monitor allows you to check the printing status.

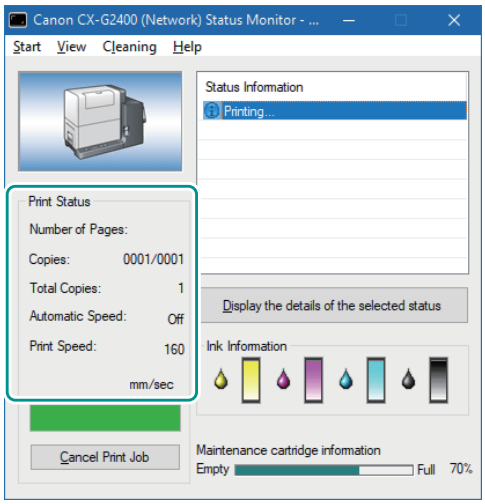

[Number of Pages]

The number of the page currently being printed is displayed.

[Copies]

The progress of printing of each page is displayed.

For example, when the printer is set so as to print ten copies of a document consisting of three pages,"0001/0010" to "0010/0010" are displayed sequentially during printing of the first page.
The progress bar shows the number of printed copies of each page.

[Total Copies]

The total number of copies which have been printed by the current job is displayed.

[Automatic Speed]

Whether the automatic speed function is turned ON or OFF is displayed.

[Print Speed]

The currently set print speed is displayed.

- **Displaying Help Topics**

  Displaying help topics from the Settings screen of the printer driver allows you to read descriptions of functions and setting procedure.

  - To read detailed descriptions of functions and setting procedure
    When you want to read detailed description of printer driver functions and setting procedure, click [Help] on the Settings screen of the printer driver.
  - To read the description of a setting item
    Right-click on the character string of the setting item, and then click [Help].

Cancel Printing

To cancel printing, click [Cancel Print Job] on the status monitor.

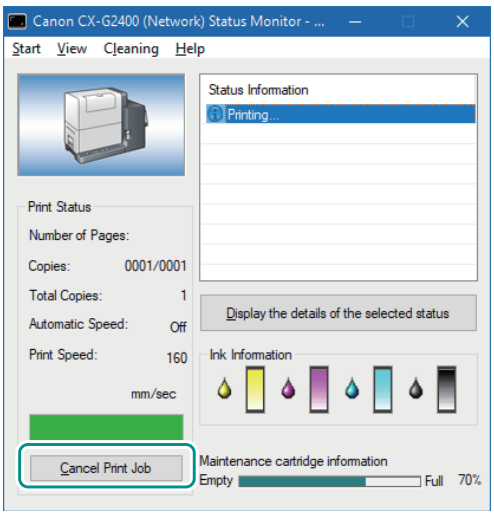

The print job is canceled. The current print job and jobs that are processing or receiving data in the printer are also canceled. In addition, all print data in process in the computer will be canceled.

NOTE

- **Stop Printing Temporarily**
  To stop printing temporarily, press the Pause key on the operation panel.
- Besides the status monitor, you can cancel printing from the Print Queue window (a window in which print data order is registered). For more details, refer to Microsoft Windows product documentation.

Configuring Print Settings

Configure print settings using the printer driver.
Methods of displaying the printer driver and the setup window are described below.

Opening the Printer Driver

- **Opening the printer driver setup window from the application software** (P.31)
  The settings are only effective for the document that is currently open.
- **Opening the printer driver setup window from the [Devices and Printers] folder** (P.32)
  The settings are effective for all documents.
- **Opening the Properties window** (P.32)
  Display the [Utility] tab to perform printer maintenance or change printer settings.

Opening the Printer Driver Setup Window from the Application Software

NOTE

- The procedure may be different depending on the application software you use. For more details, refer to the Instruction Manual that comes with your application software.

1 Select [Print] from the [Files] menu or toolbar of the application software.

The [Print] dialog box appears.

2 Select [Canon CX-G2400] and then click [Preferences] (or [Properties]).

The printer driver setup window appears.

Opening the Printer Driver Setup Window from the [Devices and Printers] Folder

1 Right-click on start and then select Control Panel -> Hardware and Sound -> Devices and printers.

- Windows 8.1
  From the Desktop charms, select Settings -> Control Panel -> Hardware and Sound -> Devices and Printers.
- Windows 7
  Select the Start menu -> Devices and Printers.

2 Right-click on the Printer icon and then select [Printing Preferences].

The printer driver setup window appears.

IMPORTANT

- The settings that can be configured on the [Utility] tab of the printer properties window are different from those that can be configured on the [Utility] tab of the printing preferences window. (P.39)

Opening the Printer Properties Window

1 Right-click on start and then select Control Panel -> Hardware and Sound -> Devices and printers.

- Windows 8.1
  From the Desktop charms, select Settings -> Control Panel -> Hardware and Sound -> Devices and Printers.
- Windows 7
  Select the Start menu -> Devices and Printers.

2 Right-click on the Printer icon, and then select [Printer Properties].

The printer properties window appears.

IMPORTANT

- Some Windows functions and print settings are displayed in the printer properties window. Print settings are located in the [General] tab and the [Utility] tab of the printer properties window. Refer to Windows product documentation for information related to Windows functions.
- The settings that can be configured on the [Utility] tab of the printer properties window are different from those that can be configured on the [Utility] tab of the printing preferences window. (P.39)

Printer Driver Setup Window Configuration

The printer driver setup window consists of the [Page Setup] tab [Color] tab, [Overlay Settings] tab, [Advanced Settings] tab, and [Utility] tab.

[Page Setup] tab

Changes to paper size, paper type, number of copies, page orientation and more can be adjusted in the [Page Setup] tab of the [Printing Preferences] window.

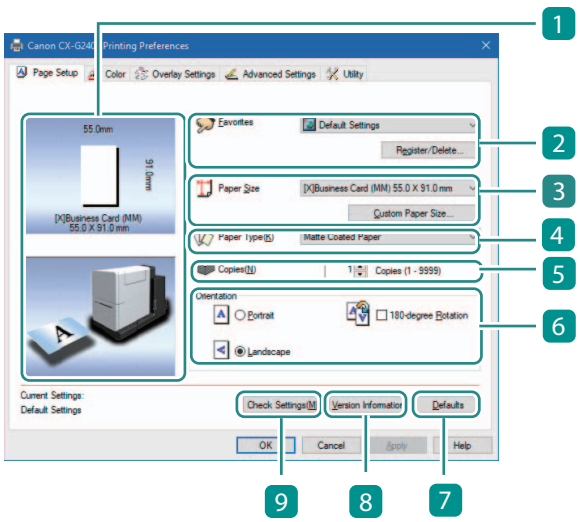

1 Preview window showing the current settings

The current paper size and print orientation are shown.

Upper pane: Paper Size (3)

Lower pane: Orientation (6)

2 Favorites (P.79)

Register frequently used paper so it can be conveniently selected from the pull-down menu. Clicking [Register/Delete...] allows to register or delete a favorite setting.

3 Paper Size

Select the size of the paper to use for printing from the pull-down menu.

Clicking [Custom Paper Size...] allows to set the paper size as desired (P.42)

4 Paper Type

Select a paper type from the pull-down menu.

5 Copies

Specify the number of copies to print.

6 Orientation

Specify the orientation of paper to print on.

7 [Defaults]

Clicking this button restores the default settings on the [Page Setup] tab.

8 [Version Information]

Check the information about the version and copyright of the printer driver by clicking this button.
On the displayed screen, clicking [Obtain Printer Information] displays the information of the currently connected printer

9 [Check Settings]

Clicking this button allows to check the print settings registered in [Favorites].

On the displayed screen, clicking [Copy] allows you to copy the settings. To read the copied settings, paste the settings into Notepad.

NOTE

- When a paper type associated with Profile (the start character is "*") is selected, the [Color Correction], [Print the gradation smoothly] and [Brightness] cannot be adjusted.

[Color] tab

Print quality and color settings can be configured in the [Color] tab of the [Printing Preferences] window.

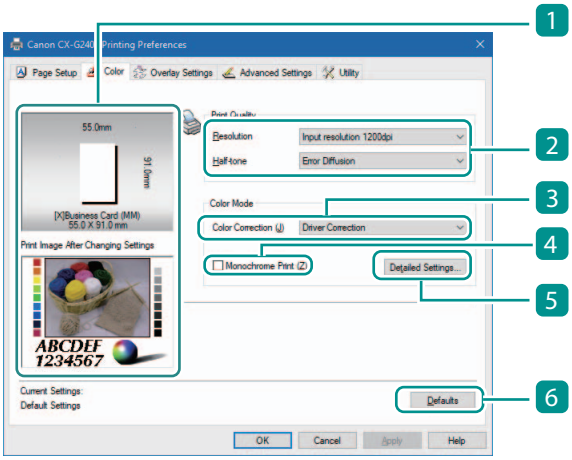

1 **Preview window showing the current settings**

The paper size currently set on the [Page Setup] tab and the print image finished with color correction on the [Color] tab are displayed.

Upper pane: Paper Size
([Page Setup] tab **3**)
Lower pane: Print image after color correction

2 **Print Quality** (P.55)

Using [Resolution] and [Half-tone], printing can be executed with your desired print quality.

3 **Color Correction** (P.57)

Select the color correction method.

4 **Monochrome Print** (P.58)

Select this check box to make black-and-white prints.

5 **[Detailed Settings...]**

Clicking this button displays the [Detailed Settings] dialog box. Use this dialog box to adjust advanced color settings.

6 **[Defaults]**

Clicking this button restores the default settings on the [Color] tab.

NOTE

- The settings configured on the [Detailed Settings] dialog box do not change even if you click [Defaults] on the [Color] tab.

[Overlay Settings] tab

Overlay printing can be set in the [Overlay Settings] tab of the [Printing Preferences] Window.

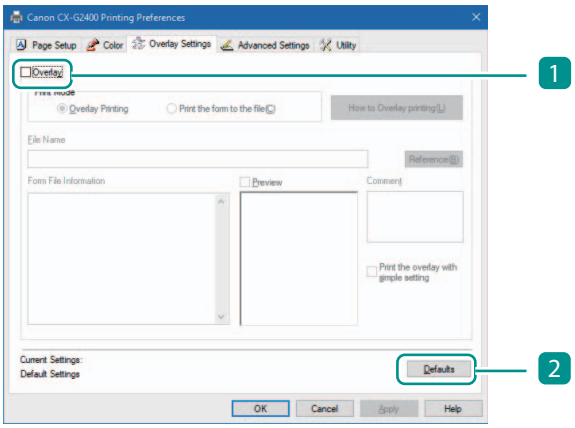

1 **Overlay** (P.70)

Select this check box to perform overlay printing.

2 **[Defaults]**

Clicking this button restores the default settings on the [Overlay Settings] tab.

[Advanced Settings] tab

Print order and print speed can be adjusted in the [Advanced Settings] tab of the [Printing Preferences] Window.

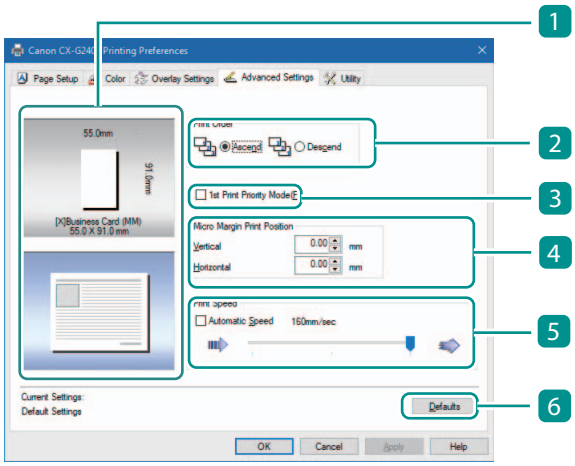

1 **Preview window showing the current settings**

The currently selected paper size is displayed. ([Page Setup] tab **3**)

2 **Print Order**

Specify the order of printing.
To print from the first page, select [Ascend]. To print from the last page, select [Descend].

3 **1st Print Priority Mode** (P.76)

Selecting this check box accelerates printing on the first sheet of paper.

4 **Micro Margin Position**

Adjusting the print position of the micro margin printing.

5 **Print Speed** (P.76)

Checking this box allows you to set the print speed.

6 **[Defaults]**

Clicking this button restores the default settings on the [Advanced Settings] tab.

NOTE

- The settings on the [Print Order] do not take effect when the [Enable advanced printing features] check box is not selected in the [Advanced] tab displayed in the printer properties window.

[Utility] tab

Perform printer maintenance or change printer settings on the [Utility] tab.

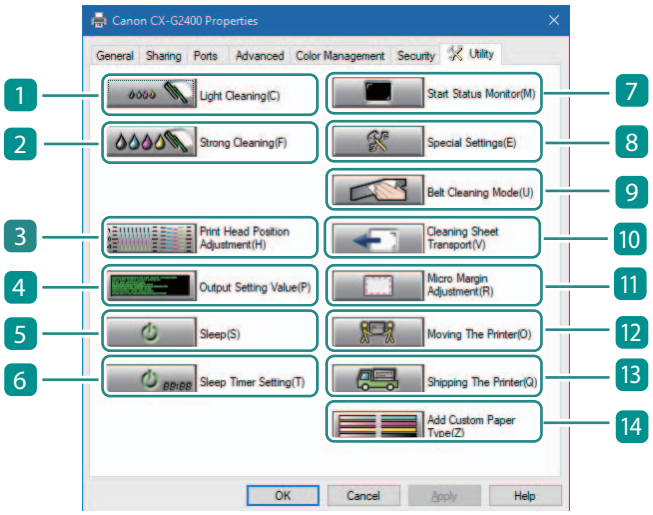

1 **[Light Cleaning]** (P.109)

Clicking this button cleans the print head.

2 **[Strong Cleaning]** (P.111)

Clicking this button cleans the print head stronger than [Light Cleaning].

3 **[Print Head Position Adjustment]*** (P.113)

Clicking this button adjusts the print head position.

4 **[Output Setting Value]** (P.126)

Clicking this button outputs the current settings of this printer.

5 **[Sleep]** (P.9)

Clicking this button puts the printer into the sleep mode..

6 **[Sleep Timer Setting]*** (P.11)

Set the time that elapses before the printer enters sleep mode and the time that elapses before the printer is turned off, by clicking this button.

7 **[Start Status Monitor]** (P.92)

Clicking this button displays the status monitor.

8 **[Special Settings]*** (P.83)

Configure special settings of this printer by clicking this button.

Normally, do not use this button.

9 **[Belt Cleaning Mode]*** (P.136)

Clicking this button cleans the transport belt.

10 [Cleaning Sheet Transport]

See the manual included with the glossy paper for further details.

11 [Micro Margin Adjustment]* (P.49)

Clicking this button sets the printer's trimming position and rounded corner size for micro margin printing.

12 [Moving The Printer]* (P.176)

Clicking this button makes preparations for moving the printer indoors.

13 [Shipping The Printer]* (P.179)

Clicking this button prepares the printer to be transported.

14 [Add Custom Paper Type]* (P.87)

Allows the user to adjust ink jetting amounts and register them along with the paper type of new paper.

* Items displayed in the [Utility] tab of the printer properties window.

IMPORTANT

- The settings that can be configured on the [Utility] tab of the printer properties window are different from those that can be configured on the [Utility] tab of the printing preferences window.
- When configuring settings in the [Utility] tab, the printer must be powered and connected to the computer.
- **Administrative privileges required for certain features**

  Administrative privileges over this printer are required when configuring settings (marked with *) on the [Utility] tab of the printer properties window.
  If a user without administrative privileges over this printer attempts to configure settings, the following message will appear.

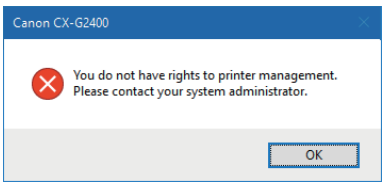

  If this message appears, contact the administrator of the computer and proceed with operation following the procedure below.

  1. Right-click on start and then select Control Panel -> Hardware and Sound -> Devices and printers.
     - Windows 8.1
       From the Desktop charms, select Settings -> Control Panel -> Hardware and Sound -> Devices and Printers.
     - Windows 7
       Select the Start menu -> Devices and Printers.
  2. Right-click on the Printer icon and then select [Printer Properties].
     The printer properties window appears.
  3. On the [General] tab, click [Change Properties].
     If the [User Account Control] screen appears, enter the password of the administrator of this printer.

Chapter 2

Printing

Printing with the Custom Paper Size 42

Setting Micro Margin Printing 47

Changing Print Quality and Adjusting Color 55

Carrying out Overlay Printing 70

Setting Paper Feed Speed 76

Registering Frequently Used Print Settings 79

Changing the Special Settings of the Printer 83

Registering Paper Type 87

Printing with the Custom Paper Size

It is possible to register a desired paper size (width, length, etc.) in the printer driver. Effective ranges of paper size settings are as follows:

- **Custom paper size**

  This setting is effective for all documents.
  To register custom paper size, select the option from the [Paper Size] pull-down menu. Up to 50 different paper sizes can be registered.

- **Customize**

  This setting is effective only for the document that is currently open.

The procedure for registering the size of a unique paper, for example, "paper_A" as a custom paper size is described below.

1 Open the printer driver setup window.

Open the printer driver setup window from the [Devices and Printers] folder. (P.32)

- When setting the customize:
  Open the printer driver setup window from the application software. (P.31).

2 Display screen for registering the paper.

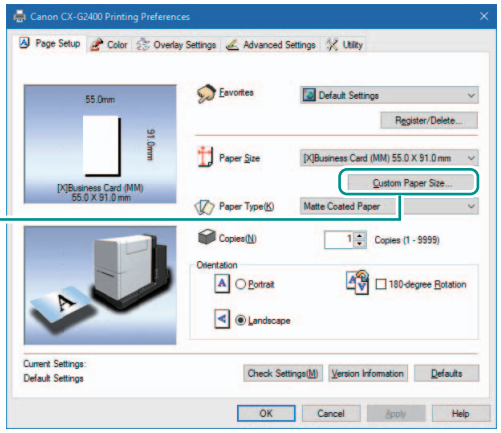

1. Click [Custom Paper Size] on the [Page Setup] tab.

- When setting the customize:
  Select [Customize] from the [Paper Size] pull-down menu on the [Page Setup] tab, and then click [Custom Paper Size...].

  Go to step **3**.

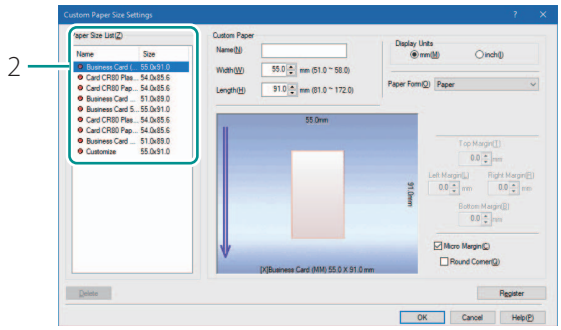

2. Select a basic paper size from [Paper sizes list].

3 Enter information about new paper.

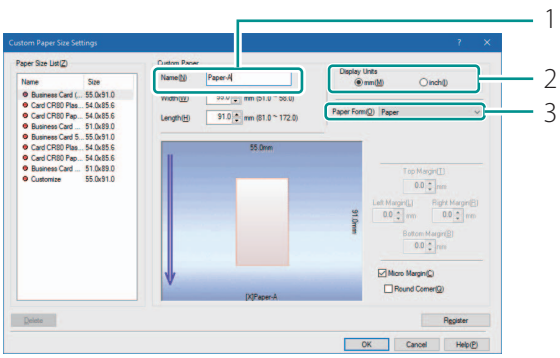

1. Enter the name of new paper in the [Name] text box.

- Enter up to 15 characters.
  Spaces and tabs cannot be used.
- When setting the customize:
  The paper name cannot be changed.

2. Select a display unit.

3. Select a paper from the [Paper Form] pull-down menu.

[Paper]

- Paper of thickness 0.21 mm - 0.37 mm (8.27 mil - 14.6 mil)

[Card20-30mil]

- Paper of thickness 0.76mm (29.9 mil)
- Plastic card

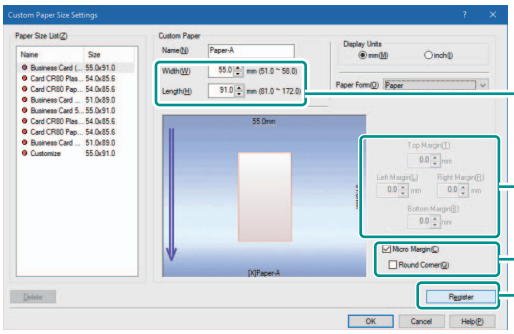

4. Enter the paper size.

- Items to be set differ depending on the paper type.
  For the ranges of settable values, see "Ranges of Custom Paper Sizes (P.46)"

5. To perform micro margin printing, check the [Micro Margin] check box.

- Check the [Round Corner] check box to perform micro margin printing on round corner paper.

6. Click [Register].

- A confirmation message appears.

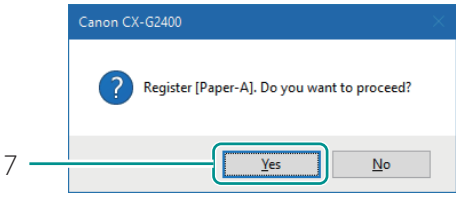

7. Click [Yes].

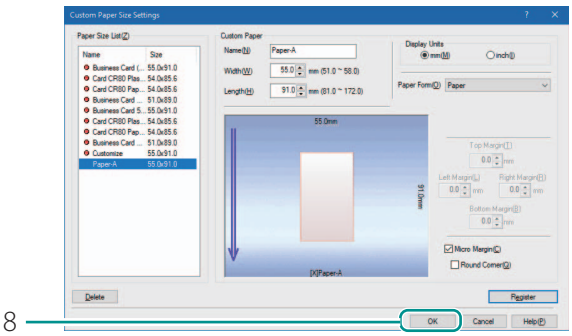

8. Click [OK].

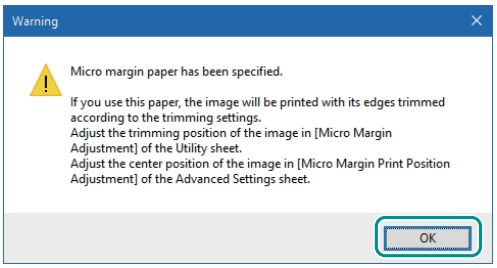

- If you register a micro margin printing paper size and close the Printing Preferences window, a message window appears. Review the message, and click [OK].

NOTE

- For details setting of micro margin printing, refer to "Setting Micro Margin Printing (P.47)".

4 Complete registration of the paper size.

Click [OK] in the printer driver setup window.
Printing will take place according to the specified paper size.

NOTE

- **Deleting the Registered Custom Paper Size**
  Select the paper size you want to delete from [Paper Size List] and then click [Delete].
- Preregistered paper settings marked with ( ) can not be deleted.

Ranges of Custom Paper Sizes

Custom paper sizes can be entered values within the ranges indicated in the table below.

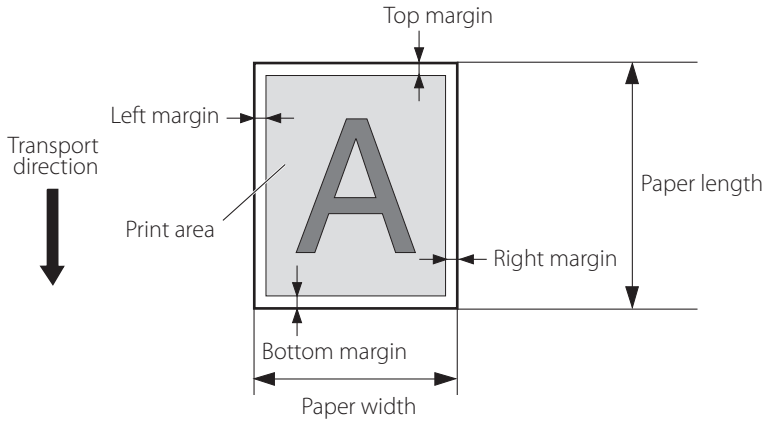

Paper width	51.0 mm - 58.0 mm (2.01 inch - 2.28 inch)
Paper length	81.0 mm - 91.0 mm (3.19 inch - 3.58 inch) 157.0 mm - 172.0 mm (6.18 inch - 6.77 inch)
Top margin	1.5 mm - (Paper length - 1.0 - Bottom margin) mm (0.06 inch - (Paper length - 0.04 - Bottom margin) inch)
Bottom margin	1.5 mm - (Paper length - 1.0 - Top margin) mm (0.06 inch - (Paper length - 0.04 - Top margin) inch)
Left margin	2.0 mm - (Paper width - 1.0 - Right margin) mm (0.08 inch - (Paper width - 0.04 - Right margin) inch)
Right margin	2.0 mm - (Paper width - 1.0 - Left margin) mm (0.08 inch - (Paper width - 0.04 - Left margin) inch)

IMPORTANT

- Paper length between 91.1 mm to 156.9 mm (3.59 inch to 6.17 inch) cannot be specified.

Setting Micro Margin Printing

Adjusting the Print Position

If the result of micro margin printing is off centered, adjust the print position.

1 Review the final print and check where it is off centered.

2 Open the printer driver setup window. (P.31)

3 Adjust the print position.

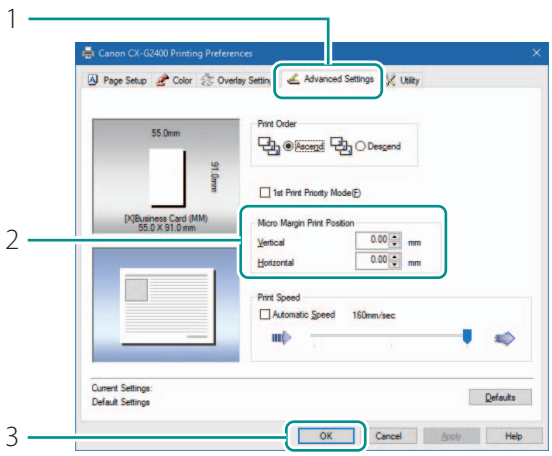

1. Click the [Advanced Settings] tab.

2. Set the [Micro Margin Print Position Adjustment] values.

   [Vertical]

   Set this when the printing is offset vertically. The more negative the value, the more the upward shift in the image. The more positive the value, the more the downward shift.

   [Horizontal]

   Set this when the printing is offset horizontally.

   The more negative the value, the more the leftward shift. The more positive the value, the more the rightward shift.

3. Click [OK].

NOTE

- The print position adjustment according to the print orientation is as follows:

Portrait,180-degree Rotation "OFF"

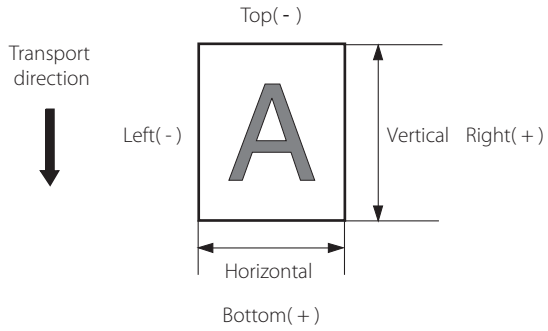

Portrait,180-degree Rotation "ON"

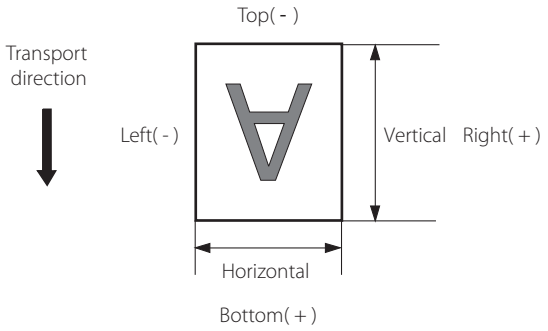

Landscape,180-degree Rotation "OFF"

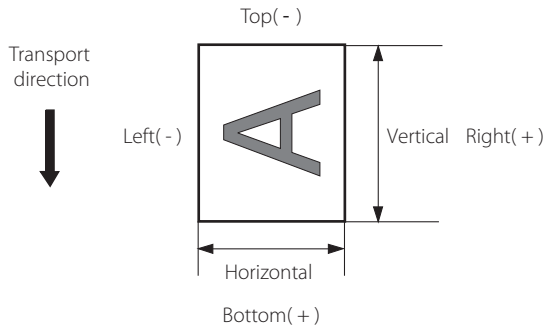

Landscape,180-degree Rotation "ON"

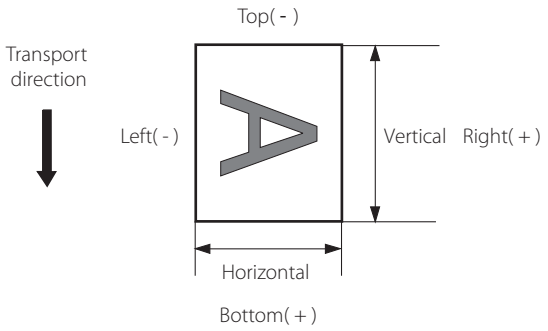

- The print position adjustment range varies depending on the paper length as follows:

	Paper length 81.0 mm - 91.0 mm (3.19 inch - 3.58 inch)	Paper length 157.0 mm - 172.0 mm (6.18 inch - 6.77 inch)
Vertical	- 0.55 mm - 0.55 mm	- 0.85 mm - 0.85 mm
Horizontal	- 0.35 mm - 0.35 mm	- 0.60 mm - 0.60 mm

- If you enter a value outside the adjustable range, the value is automatically set to the nearest allowable value.

Adjusting the Trimming Position

In micro margin printing, the periphery around the area where the paper and document overlap is trimmed before printing is performed. The standard trimming position is 0.3 mm (0.01 inch) smaller on all sides than the paper size. To perform micro margin printing on round corner paper, adjust the trimming position using [Round Corner Size Adjustment].

- Micro margin printing

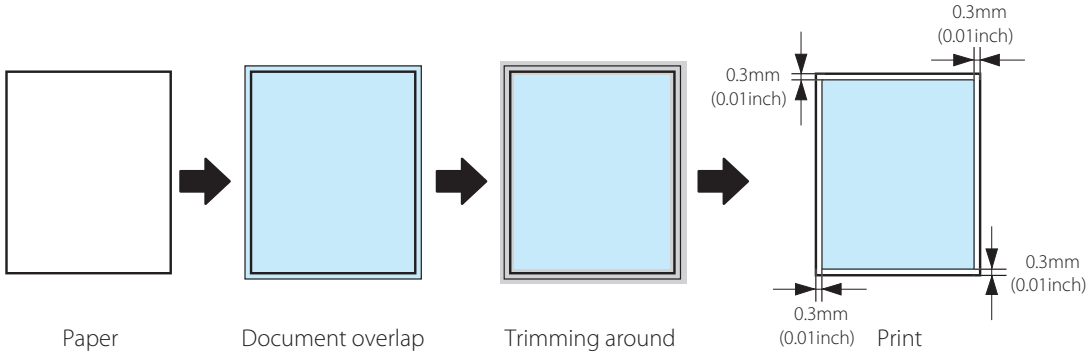

IMPORTANT

- Administrative privileges over this printer are required to configure settings of this printer.
  If a user without administrative privileges proceeds with configuration of settings, a message "You do not have rights to printer management. Please contact your system administrator." appears.
  For more details, see "Administrative privileges required for certain features (P.40)".
- You cannot change the set trimming position when printing is in progress or an error has occurred.

1 Check that paper is set in the printer.

2 Open the properties window of the printer. (P.32)

3 Display the [Micro Margin Adjustment] dialog box.

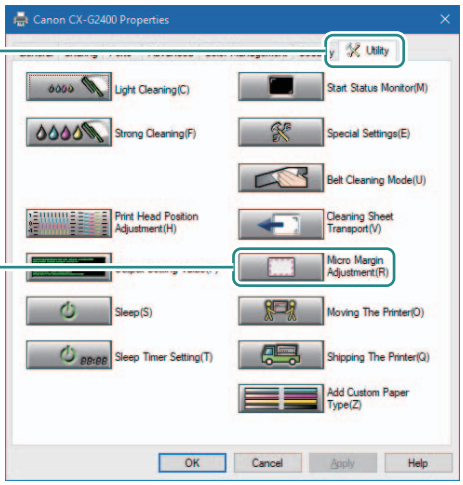

1. Click the [Utility] tab.
2. Click [Micro Margin Adjustment].

4 For round corner paper, adjust the round corner size.

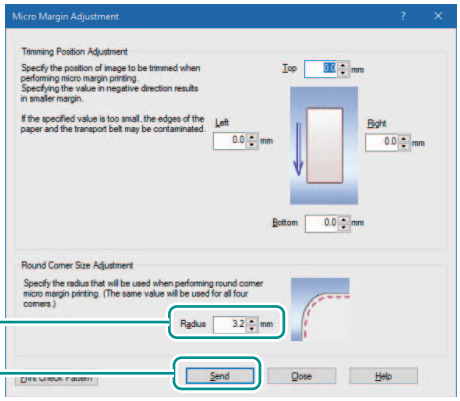

1. Enter the round corner radius.
   - The radius can be adjusted in the range of 0.0 mm to 5.0 mm in 0.1 mm steps.
   - By default, the radius is set to 3.2 mm.
   - The same value is used on all four corners.
   - Elliptical arc cannot be specified
2. Click [Send].

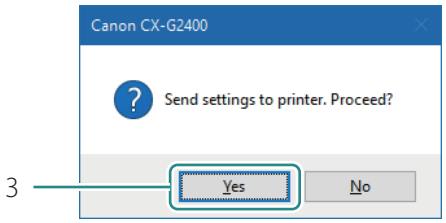

3. Click [Yes].

IMPORTANT

- Printing on paper of a wrong round corner size could stain the transport belt. If stain occurs, clean the transport belt. (P.136)

5 Print check patterns.

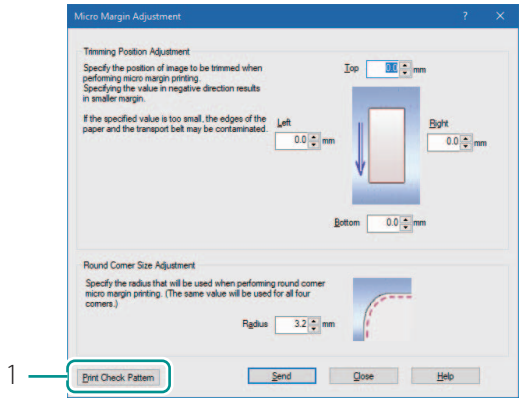

1. Click [Print Check Pattern].

- A confirmation message appears.

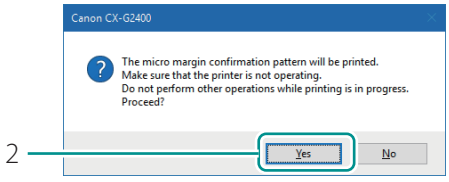

2. Click [Yes].

Transport direction

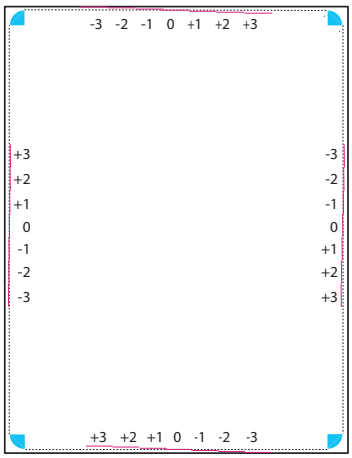

- Printing of adjustment check patterns.

6 Look at the micro margin check pattern, and check the adjustment value.

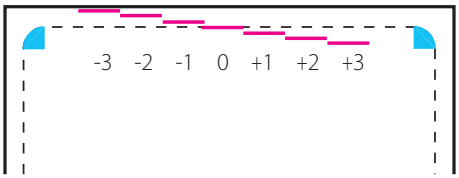

- The current trimming position is "0" (0.0 mm).
- For example, if you want to adjust the trimming position to the "+1" position of the pattern, read it to mean "+0.1 mm."
- The quadrants at the four corners are the trimming positions for round corners.

7 Adjust the trimming position.

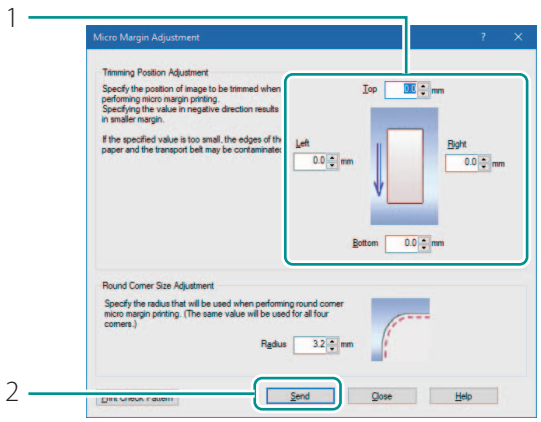

1. Enter the trimming position.

- The current trimming position is 0.0 mm. Each of the four sides can be adjusted in the range of -0.3 mm to +0.3 mm in 0.1 mm steps. However, the adjustment range may be limited depending on the current setting.
- The more negative the value, the more the outward shift. The more positive the value, the more the inward shift.
- The more negative the value, the more the outward shift. The more positive the value, the more the inward shift.

2. Click [Send].

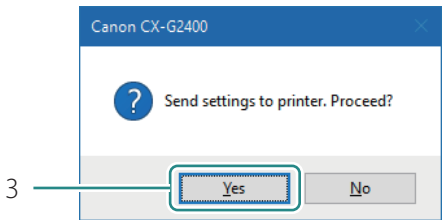

3. Click [Yes].

8 Print adjustment patterns again.

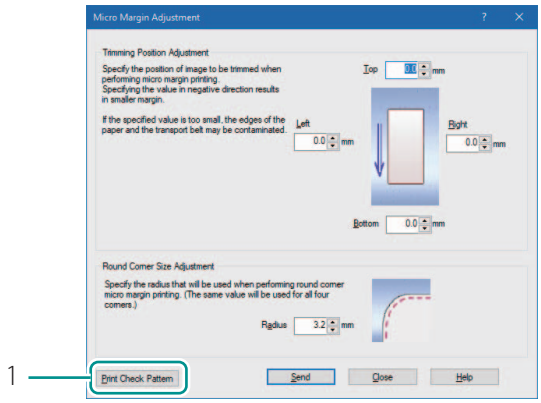

1. Click [Print Check Pattern].

- A confirmation message appears.

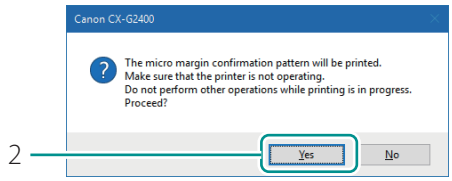

2. Click [Yes].

9 Check the check pattern after adjustment of the trimming position.

Look at the check pattern. If the trimming position is at the adjusted position, adjustment is complete.

10 Complete the trimming position adjustment procedure.

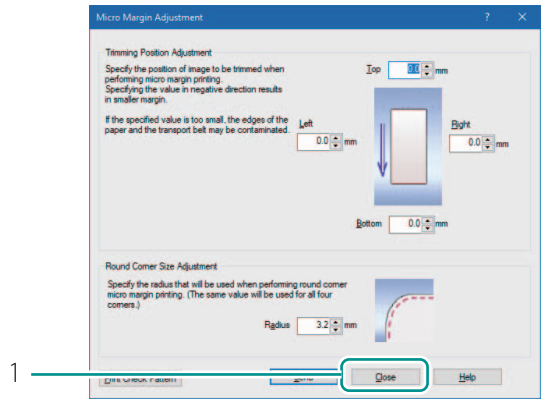

1. Click [Close].

- A confirmation message appears.

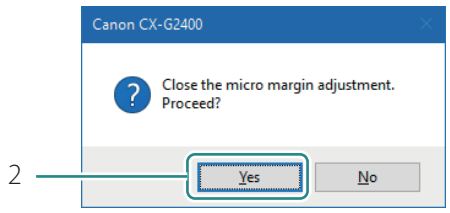

2. Click [Yes].

IMPORTANT

- Printing does not take place in the region outside the trimming position. Therefore, characters and images at the edges of the paper may not fit in the paper.
- Adjust the trimming position in small increments as you check the position with the check pattern. Setting the trimming position to the extreme negative value may stain the transport belt. If stain occurs, clean the transport belt. (P.136)

Changing Print Quality and Adjusting Color

Using the printer driver, you can configure various settings related to the print quality and color.

Changing Print Quality Setting

Print quality based on what is best suited for the final print.

1 Open the printer driver setup window. (P.31)

2 Select a resolution.

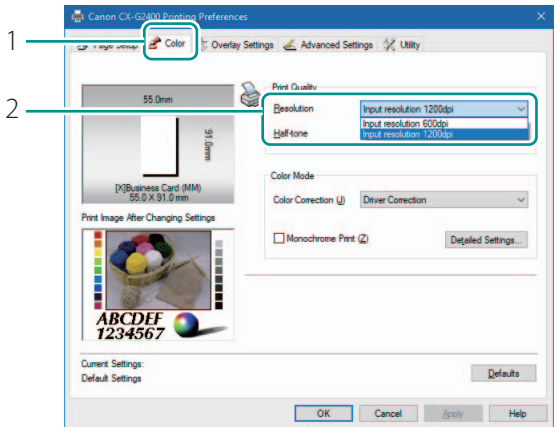

1. Click the [Color] tab.

2. Select [Input resolution 1200dpi] or [Input resolution 600dpi].

   [Input resolution 1200dpi]

   Longer print times but higher print quality occurs when printing with the [Input Resolution 1200 dpi] setting.

   [Input resolution 600dpi]

   Faster print times but lower print quality occurs when printing with the [Input Resolution 600 dpi] setting.

3 Select a half-toning method.

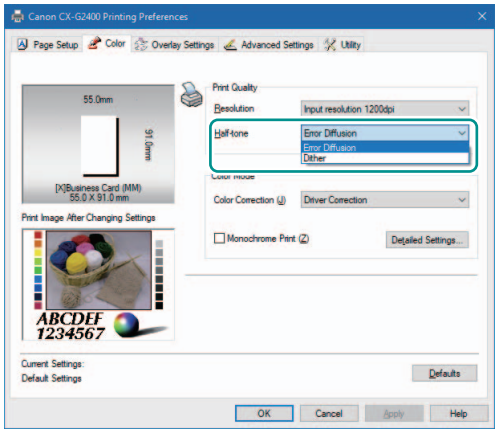

1. Select [Dither] or [Error Diffusion].

   [Dither]

   This method is suitable for printing graphics requiring clear borders between colors.

   [Error Diffusion]

   This method is suitable for printing photos and graphics requiring subtle gradation.

NOTE

- When [Error Diffusion] is selected, a longer time is required to process data as compared with [Dither] therefore the printing speed may decrease.

4 Complete the setting procedure.

Click [OK] in the printer driver setup window.
When printing begins, the document will be printed using the selected print quality.

Printing with the Color Correction Method Changed

1 Open the printer driver setup window. (P.31)

2 Select a color correction method.

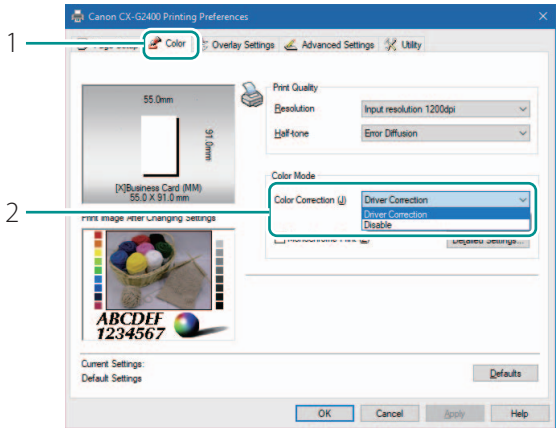

1. Click the [Color] tab.

2. Select “Driver Correction” or “Disable.”

   [Driver Correction]

   The optimum color adjustment is made for this printer.

   [Disable]

   Image processing is performed at the highest speed without color correction. Select this method to give priority to the printing speed.

3 Complete the setting procedure.

Click [OK] in the printer driver setup window.
When printing begins, the document will be printed using the selected color correction method.

NOTE

- [Color correction] can not be selected when a paper type associated with Profile (the start character is "*") is selected.

Printing in Black and White

A color document can be made into black and white prints.
When black-and-white prints are made, only black ink is used.

1 Open the printer driver setup window. (P.31)

2 Configure the settings for black-and-white printing.

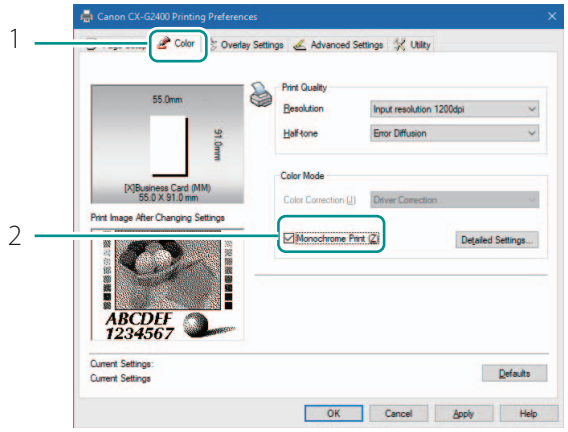

1. Click the [Color] tab.
2. Check the [Monochrome Print] check box.

3 Complete the setting procedure.

Click [OK] in the printer driver setup window.
When printing begins, the document will be printed in black and white.

Print the Gradation Smoothly

Use the [Print the gradation smoothly] feature if you see uneven color gradients in the printout.

1 Open the printer driver setup window. (P.31)

2 Select a color correction method from the [Color Correction] pull-down menu and then choose the [Detailed Settings] dialog box.

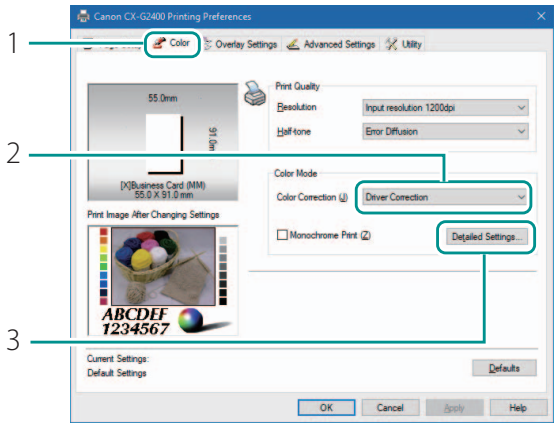

1. Click the [Color] tab.
2. Select [Driver Correction] from the [Color Correction] pull-down menu.
3. Click [Detailed Settings].

3 Print the gradation smoothly.

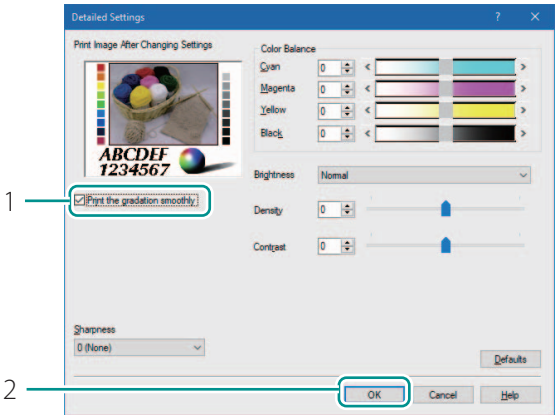

1. Click [Print the gradation smoothly] check box.
2. Click [OK].

4 Complete the setting procedure.

Click [OK] in the printer driver setup window.
When printing begins, the gradation of the document will be printed smoothly.

NOTE

- [Print the gradation smoothly] can not be selected when [Color Correction] is set to [Disable].
- [Print the gradation smoothly] can not be selected when a paper type associated with Profile (the start character is "*") is selected.

Setting the Sharpness

You can improve contours (edge definition) and reduce blurriness in an image by adjusting the sharpness.

1 Open the printer driver setup window. (P.31)

2 Display the [Detailed Settings] dialog box.

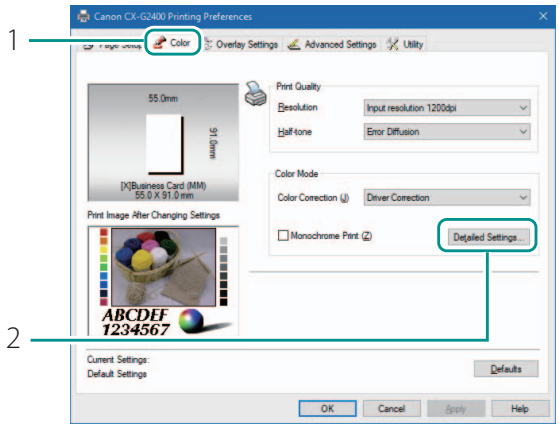

1. Click the [Color] tab.
2. Click [Detailed Settings].

3 Adjust the sharpness.

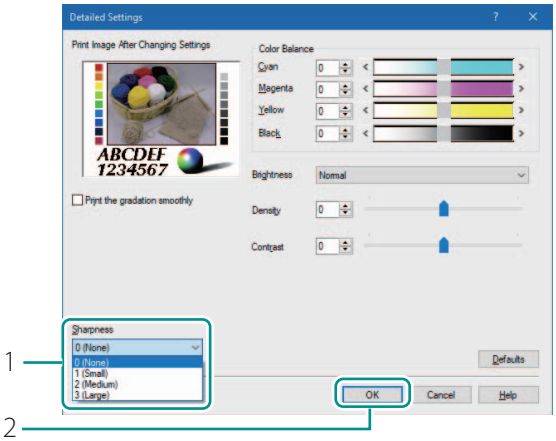

1. Adjust the sharpness level.

- To increase sharpness, select one of [1(Small)], [2(Medium)], and [3(Large)].
  The sharpness level increases or decreases when the number increases or decreases.
- When [0(None)] is selected, no adjustment is made to sharpness.

2. Click [OK].

4 Complete the setting procedure.

Click [OK] in the printer driver setup window.
When printing begins, the document will be printed at the selected sharpness level.

Adjusting the Color Balance

You can adjust the color balance for printed colors (cyan, magenta, yellow and black).

1 Open the printer driver setup window. (P.31)

2 Display the [Detailed Settings] dialog box.

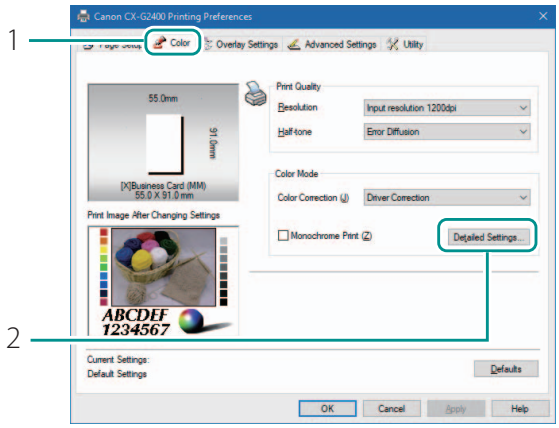

1. Click the [Color] tab.
2. Click [Detailed Settings].

3 Adjust the color balance.

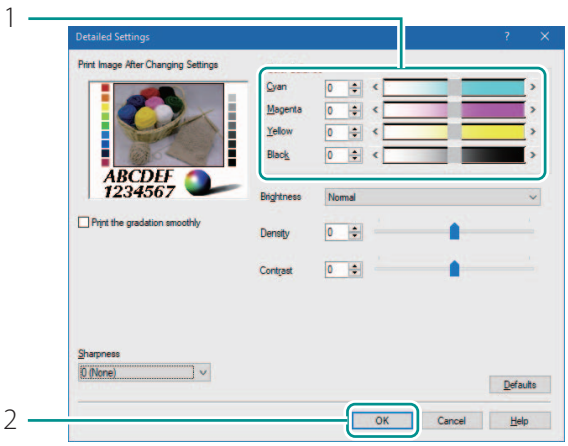

1. Adjust the color balance by moving the sliders for each color.

- The center of the slidebar is the default position (0). The slider can be moved between -50 to +50.
  The more you move the slider to the left, the fainter the color becomes. The more you move the slider to the right, the darker the color becomes.
- A value can be directly entered in the entry box interlocked with the slider as shown on the left.

2. Click [OK].

4 Complete the setting procedure.

Click [OK] in the printer driver setup window.
When start printing, the document will be printed at the adjusted color balance.

NOTE

- When the [Monochrome Print] box is checked, color balances of colors other than black can not be adjusted.

Adjusting the Density

1 Open the printer driver setup window. (P.31)

2 Open the [Detailed Settings] dialog box.

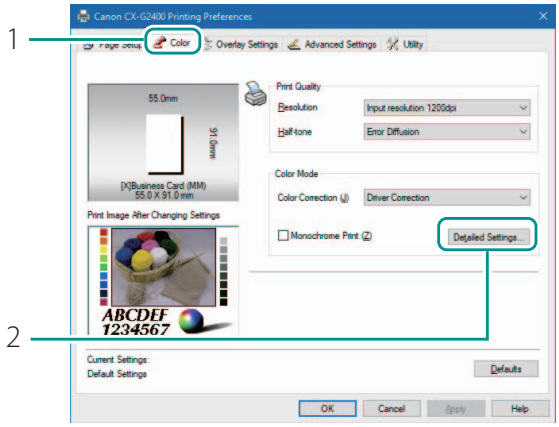

1. Click the [Color] tab.
2. Click [Detailed Settings].

3 Adjust the density.

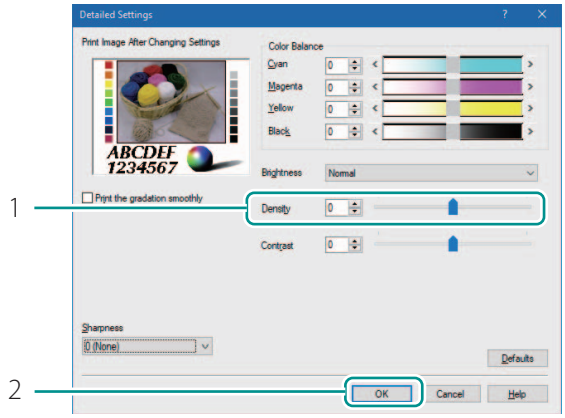

1. Adjust the density by moving the slider.

- The center of the slidebar is the default position (0). The slider can be moved between -50 to +50.
  The more you move the slider to the left, the lower the density becomes. The more you move the slider to the right, the higher the density becomes.
- A value can be directly entered in the entry box interlocked with the slider as shown on the left.

2. Click [OK].

4 Complete the setting procedure.

Click [OK] in the printer driver setup window.
When printing begins, the document will be printed at the adjusted density.

NOTE

- [Density] can not be adjusted when the [Monochrome Print] check box is selected.

Adjusting the Brightness or Contrast

Adustments can be made if you are not satisfied with the overall brightness (too dark or bright) and contrast (the dark portions are not clearly distinguished from the light portions) of the printed result, adjustment can be made.

1 Open the printer driver setup window. (P.31)

2 Select a color correction method from the [Color Correction] pull-down menu and then display the [Detailed Settings] dialog box.

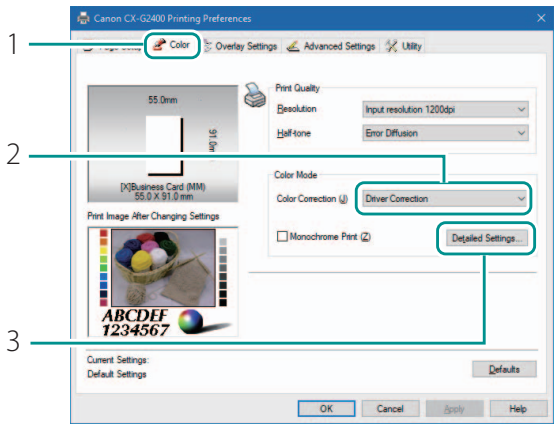

1. Click the [Color] tab.
2. Select [Driver Correction] from the [Color Correction] pull-down menu.
3. Click [Detailed Settings].

3 Adjust the brightness.

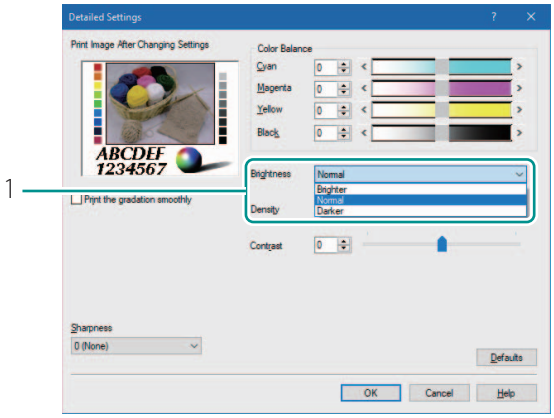

1. Select one from [Brighter], [Normal], and [Darker].

- Adjust the brightness of the intermediate colors without changing the brightness of the darkest and brightest portions.

4 Adjust the contrast.

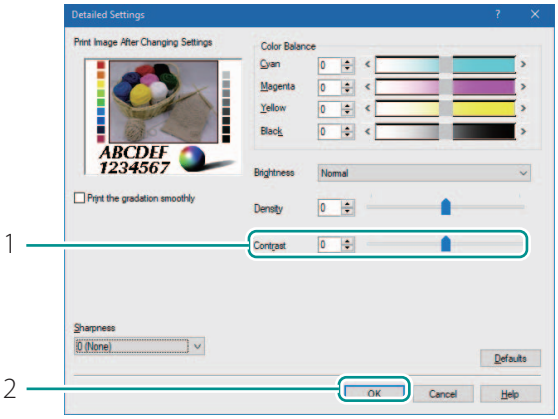

1. Adjust the contrast by moving the slider.

- The center of the slidebar is the default position (0). The slider can be moved between -50 to +50.
  The more you move the slider to the left, the lower the contrast becomes. The more you move the slider to the right, the higher the contrast becomes.
- A value can be directly entered in the entry box interlocked with the slider as shown on the left.
- To clearly distinguish between the light portion and dark portion, increase the contrast. To increase the number of intermediate colors by reducing the difference between the light portion and dark portion, decrease the contrast.

2. Click [OK].

5 Complete the setting procedure.

Click [OK] in the printer driver setup window.
When printing begins, the document will be printed at the adjusted brightness and contrast.

NOTE

- [Brightness] can not be selected when [Color Correction] is set to [Disable].
- [Brightness] can not be selected when a paper type associated with Profile (the start character is "*") is selected.
- [Contrast] can not be adjusted when the [Monochrome Print] check box is selected.

Carrying out Overlay Printing

Overlay printing is a printer function which internally combines two pieces of data, i.e., the fixed data created in advanced as a "form file" that is commonly printed on all pages, and the data on each page of a document (variable data such as characters.) The combined data (form and variable data) is printed onto each printed sheet using the same form but different information from the variable data.
Data using a template containing many images can be printed without transferring large-capacity image data to the printer multiple times, allowing the data to be printed quickly.

Overlay printing process

Step 1

Print fixed data (image, template, etc.) to the printer to create a form file. (P.71)

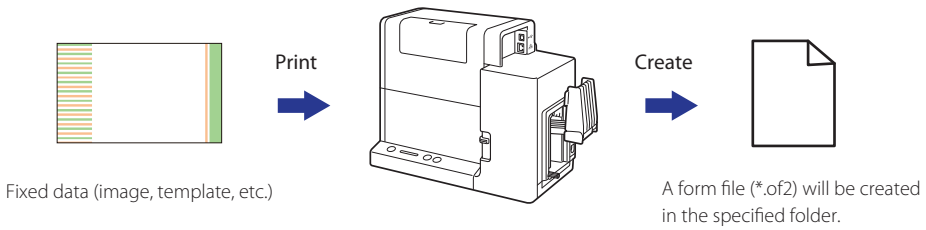

Fixed data (image, template, etc.)

A form file (*.of2) will be created in the specified folder.

Step 2

Print variable data such as characters, then use overlay printing. (P.73)

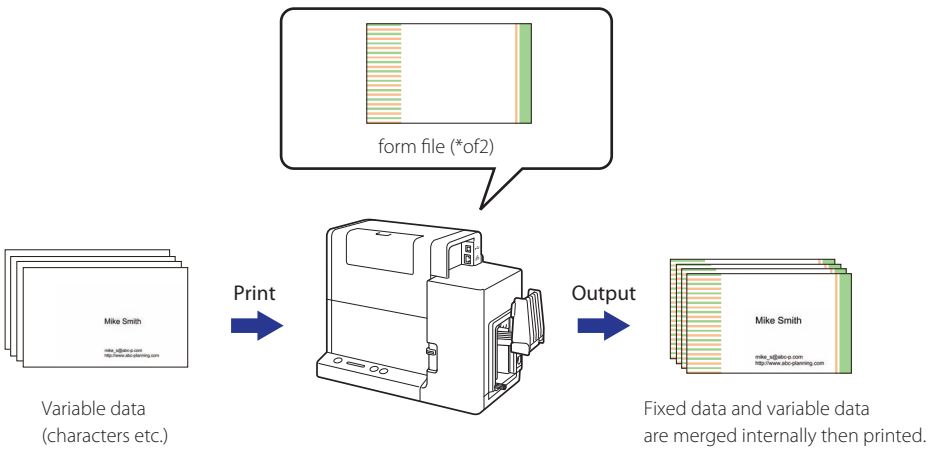

Variable data (characters etc.)

Fixed data and variable data are merged internally then printed.

Printing a Form to a File

Send (print) fixed data (template, etc.) to the printer to create a form file.

1 Open the data to be created as a form file using the application software used to create the data.

2 Display the printer driver setup window from the application software. (P.31)

3 Create a form file.

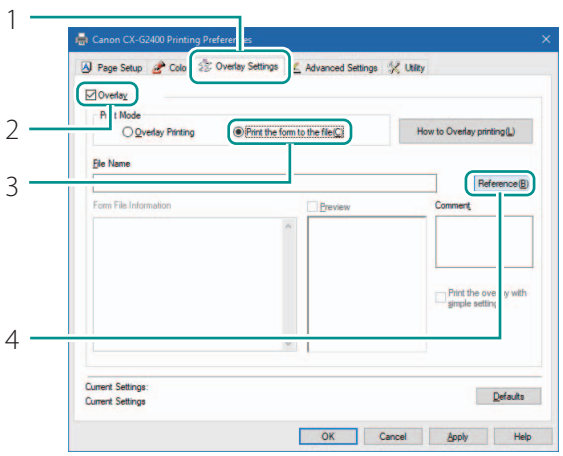

1. Click the [Overlay Settings] tab.
2. Check the [Overlay] check box.
3. Select [Print the form to the file].
4. Click [Reference].

- The file path name can be entered directly in the [File Name] entry box.

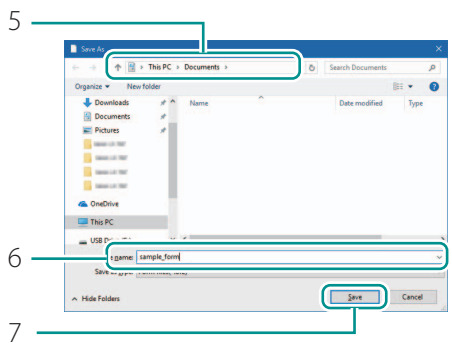

5. Specify the storage location of the form file.

6. Enter a file name.

7. Click [Save].

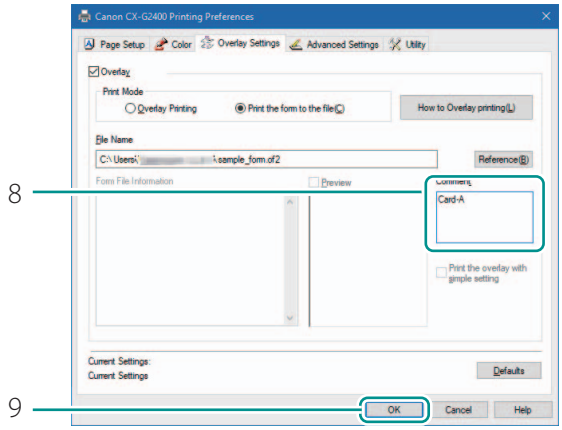

8. Enter a comment. (Optional)

- Enter up to 31 characters.

9. Click [OK].

4 Print.

Click [Print] in the [Print] dialog box.
The form file (*.of2) is stored at the specified storage location.

NOTE

- Even when two or more pages of print data are created as form files, they are stored as one file.

IMPORTANT

- When carrying out overlay printing in the server/client environment, observe the following setting precautions:
  - Store the form file (*.of2) in a shared folder that can be referenced by both the server and client.
  - The file name to be entered in the [File Name] (storage location of form file (*.of2)) entry box must be a path name (e.g., \\PC-Commom\FormFolder\file.of2) that can be referenced by both the server and client over the network.

Carrying out Overlay Printing

1 Open the data to be used as print data using the application software used to create the data.

2 Display the printer driver setup window from the application software. (P.31)

3 Configure the settings for overlay printing.

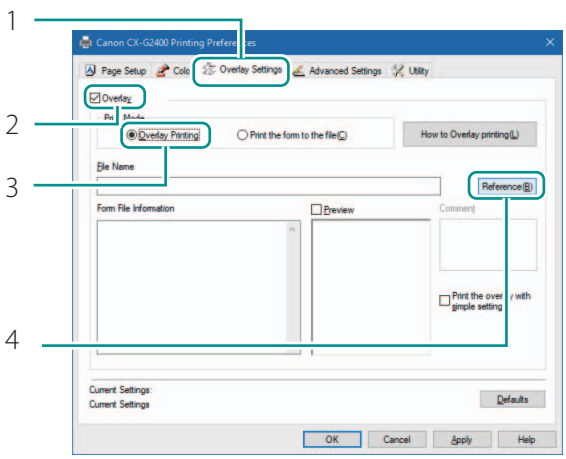

1. Click the [Overlay Settings] tab.
2. Check the [Overlay] check box.
3. Select [Overlay Printing].
4. Click [Reference].

- You can directly enter the file path name in the [File Name] entry box.

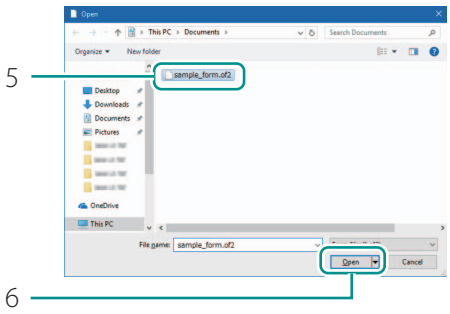

5. Specify a form file.

- Select the file with an extension ".of2."

6. Click [Open].

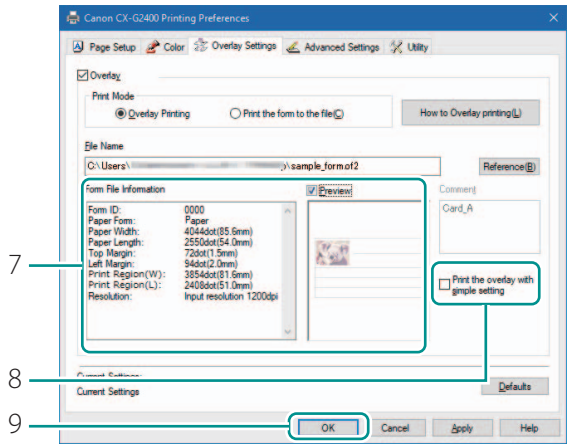

7. Confirm the information about the form file shown in the [Form File Information] and [Preview] panes.

- To see the preview, check the [Preview] check box.
- Some form files may not show their information in the [Form File Information] and [Preview] panes.

8. Select the method of combining the document and form data.

- To complete overlay printing with simple settings, check the [Print the overlay with simple setting] check box.

9. Click [OK].

NOTE

- **Carrying out Overlay Printing with Simple Settings**
  When the [Print the overlay with simple setting] box is checked, overlay printing can be completed faster than normal overlay printing ([Print the overlay with simple setting] box is not checked). However, since both the form file and document are printed in the portions where they overlap, colors of the form file and documents are mixed.
  When normal overlay printing is performed ([Print the overlay with simple setting] box is not checked), neither the form file nor document is printed in the portions where they overlap. Accordingly, the document is printed just like the original image.

4 Print.

Click [Print] in the [Print] dialog box.
The document is printed over the form data.

IMPORTANT

- When carrying out overlay printing, the print settings made for the form file must be exactly the same as those made for the document. If any setting is different between them, overlay printing cannot be performed.
  Print settings: Paper form, paper size (length, width, margins), and print quality
- If the version of the printer driver used to create the form file is different from the version of the printer driver used for printing, you may not be able to carry out overlay printing. In this case, create the form file using the

printer driver used for printing.

NOTE

- Clicking [How to Overlay printing] in the [Overlay Settings] tab will display the help screen showing the Overlay printing method.

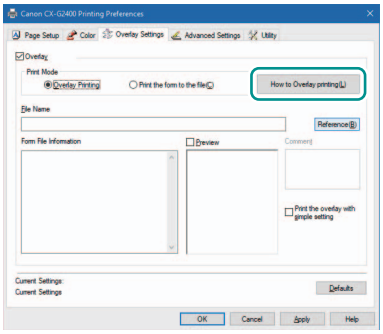

Setting Paper Feed Speed

The procedure for setting the paper feed speed of the printer is described below

Accelerating Printing on the 1st Sheet of Paper

Selecting the 1st Print Priority mode accelerates printing on the first sheet of paper.

IMPORTANT

- In the server/client environment, the [1st Print Priority Mode] check box is not effective.
- When you select [1st Print Priority Mode], depending on the operating environment or the type of print data, the printing may take longer than usual ([1st Print Priority Mode] not checked) or a blank sheet may be ejected.
- When the [Enable advanced printing features] check box is not checked on the [Advanced] tab displayed on the printer properties window, the effect of checking the [1st Print Priority Mode] check box is reduced.

1 Open the printer driver setup window. (P.31)

2 Select the 1st Print Priority mode.

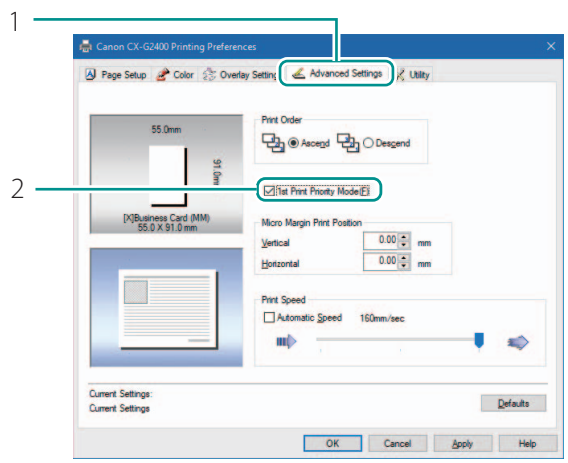

1. Click the [Advanced Settings] tab.
2. Check the [1st Print Priority Mode] check box.

- A confirmation message appears.

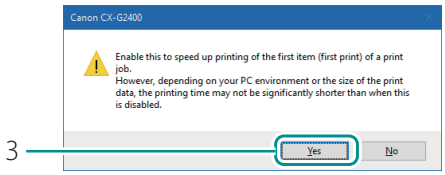

3. Click [Yes].

3 Complete the setting procedure.

Click [OK] in the printer driver setup window.

Adjusting the Paper Feed Speed

1 Open the printer driver setup window. (P.31)

2 Adjust the paper feed speed.

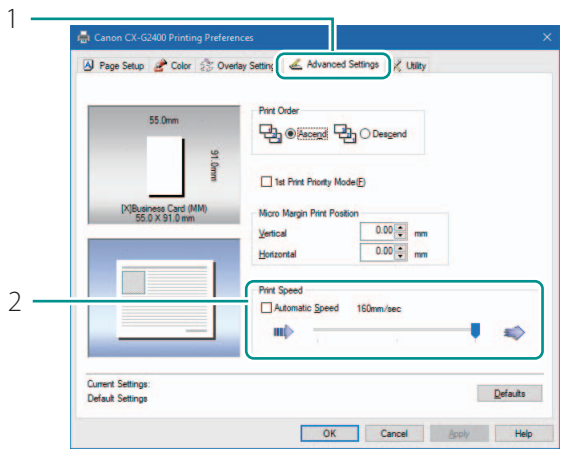

1. Click the [Advanced Settings] tab.

2. Adjust the print speed.

- Adjust the print speed by moving the slide bar.
- If the [Automatic Speed] box is checked, uncheck it.
  The slide bar becomes effective.

3 Complete the setting procedure.

Click [OK] in the printer driver setup window.

NOTE

- When the [Automatic Speed] box is checked, the printing speed automatically changes to an appropriate one according to the print data transmission status.
  (The printing speed automatically changes to 160 mm/sec, 120 mm/sec, or 80 mm/sec.)
- The printing speed at each transport speed is as follows:

Transport speed	160mm/sec	120mm/sec	80mm/sec
Printing speed	Business Card: 50 sheet/min	Business Card: 37 sheet/min	Business Card: 25 sheet/min

Registering Frequently Used Print Settings

Frequently used print settings can be registered using [Favorites]. Selecting a registered favorite from the [Favorites List] allows you to make prints with the registered print settings.

IMPORTANT

- Up to ten print settings can be registered in [Favorites].
- When the [Settings] screen of the printer driver is displayed from the application software, it is not possible to register or delete settings in/from [Favorites]. To do so, display the [Settings] screen of the printer driver from the [Devices and Printers] folder of Windows.

1 Open the printer driver setup window from the [Devices and Printers] folder. (P.32)

2 On the [Page Setup] tab, [Color] tab, [Overlay Settings] tab, and [Advanced Settings], configure the settings you want to register.

3 Register the settings.

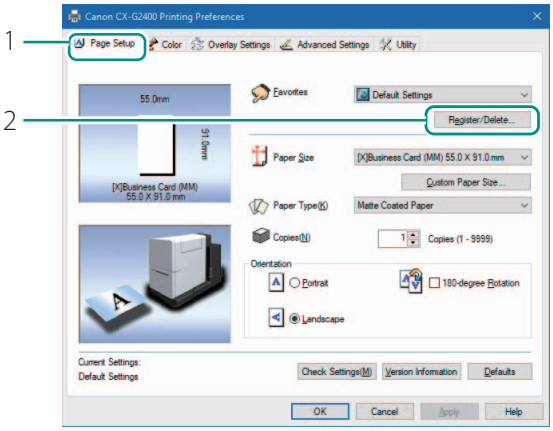

1. Click the [Page Setup] tab.

- Make sure [Current Settings] is selected from the [Favorites].

2. Click [Register/Delete...].

- The [Register/Delete Favorites] dialog box appears.

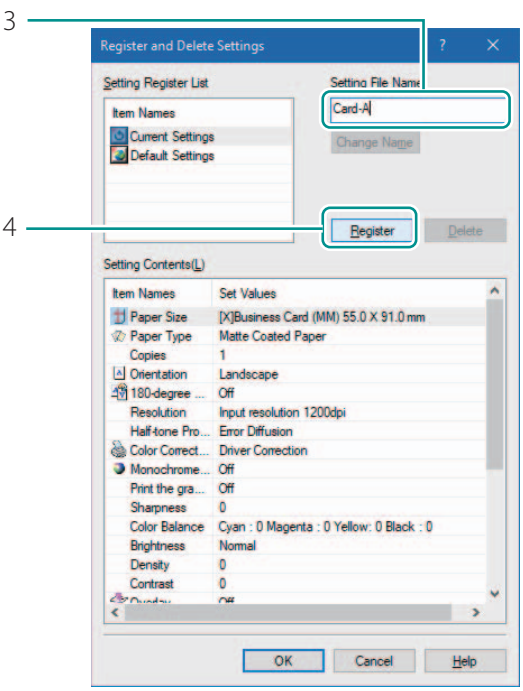

3. Enter a desired name in the [Setting File Name] entry box and then confirm the [Setting Contents].

- Up to 16 characters can be entered.
- Spaces and tabs are not allowed.
- Entry in the [Setting File Name] entry box is mandatory.

4. Click [Register].

- A confirmation message appears.

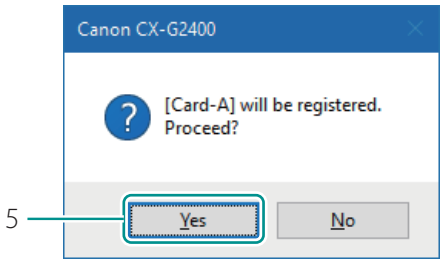

5. Click [Yes].

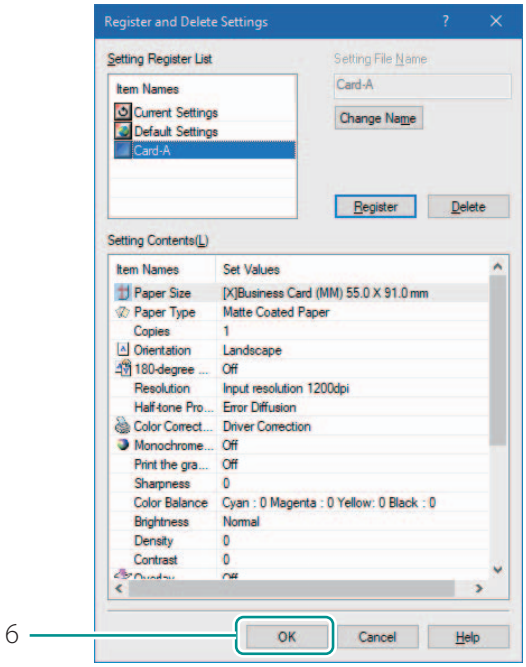

6. Click [OK].

- The print settings are registered in [Favorites].

NOTE

- **Changing the Name of a Favorite**

  To change the name of a registered favorite, select it from the [Registered Settings List] and then click [Change Name]. After changing the name, click [Register].

- **Deleting a Favorite**

  To delete a registered favorite, select if from the [Registered Settings List], and then click [Delete].

- **Confirming a Registered Favorite (Settings)**

  Clicking [Check Settings] on the [Page Setup] tab allows you to confirm the print settings registered in [Favorites]. Clicking [Copy] in the dialog box allows you to copy the print settings to the clipboard of the OS.

- **Default Settings**

  Default settings are as follows:

Tab Name	Item Name	Setting
Page Setup	Paper Size	[X]Business Card(MM) 55.0 X 91.0mm
	Paper Type	Matte
	Copies	1
	Orientation	Landscape
	180-degree Rotation	Off
Color	Resolution	Input resolution 1200dpi
	Half-tone	Error Diffusion
	Color Correction	Driver Correction
	Monochrome Print	Off
	Print the gradation smoothly *	Off
	Sharpness*	0 (None)
	Color Balance*	Bk/C/M/Y All 0
	Brightness*	Normal
	Density*	0
	Contrast*	0
Overlay Settings	Overlay	Off
	Print Mode	-
	Preview	-
	Comment	-
	Print the overlay with simple setting	-
Advanced Settings	Print Order	Ascend
	1st Print Priority Mode	Off
	Micro Margin Print Position Adjustment (Vertical)	0.00
	Micro Margin Print Position Adjustment (Horizontal)	0.00
	Print Speed	160 mm/sec

*: Items in [Detailed Settings] dialog box

Changing the Special Settings of the Printer

The function of [Special Settings] on the [Utility] tab is described below.
Use [Special Settings] to change the special settings of the printer as required. Normally, it is not necessary to change the settings.

There are three special settings.

[Ink Pre-fire On The Paper]

A very small quantity of ink is constantly discharged onto paper at regular intervals in order to maintain the print head performance.
By default, the [Ink Pre-fire On The Paper] check box is not selected. If this check box is unchecked, the printing time increases due to an extra process for print head cleaning.

[Print&Hold Mode]

Select the [Print & Hold Mode] check box when you want to stop printing at the ejection slot one sheet at a time.
By default, this check box is not selected.

[Low Temperature Print Mode]

Set the printer to [Low Temperature Print Mode].
When the printer is used at a temperature of less than 13 degrees Celsius (55.4 degrees Fahrenheit), the amount of ink pre-fire on the paper is increased for printing. Therefore, when used in a location where the room temperature easily fluctuates, the mode automatically switches according to room temperature when printing, resulting in uneven print quality. Use this mode when you want to keep printing quality consistent.
By default, this check box is not selected.

This function consumes more in than other modes, use it only when necessary.

[Reduce smudge on media edge]

Look at the printed result, and select the [Reduce smudge on media edge] check box to reduce stains at the paper edges if necessary.
By default, this check box is not selected.
The printing speed is slow when this mode is set.

IMPORTANT

- Administrative privileges over this printer are required to configure sprinter settings.
  If a user without administrative privileges proceeds with configuration of settings, a message "You do not have rights to printer management. Please contact your system administrator." appears.
  For more details, see "Administrative privileges required for certain features (P.40)".
- When printing is in progress or an error has occurred, you cannot change any special setting.

1 Open the properties window of the printer. (P.32)

2 Display the [Special Settings] dialog box.

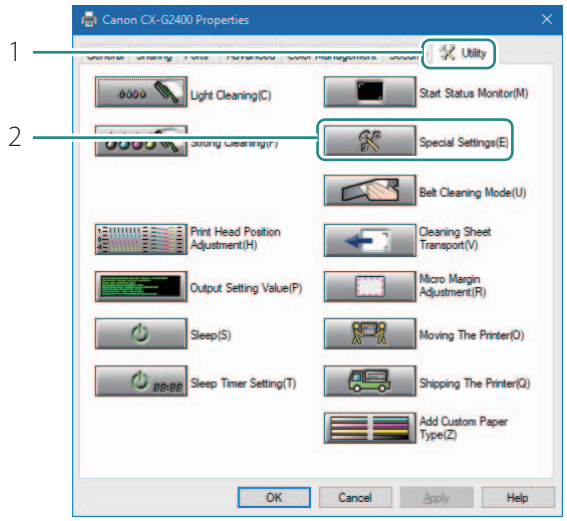

1. Click the [Utility] tab.
2. Click [Special Settings].

3 Change settings as needed.

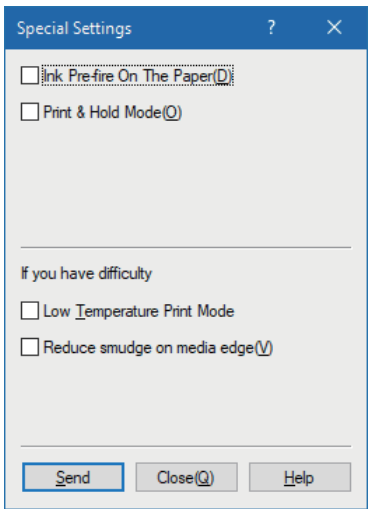

- The special settings of the connected printer (online status) are displayed.

IMPORTANT

- Regardless of the setting, ink pre-fire on the paper is not performed during micro margin printing.

NOTE

- When the computer cannot communicate with the printer (offline status), the special settings that the computer received in the last communication (when the printer was in the online status) are displayed.

4 Send the changed special settings.

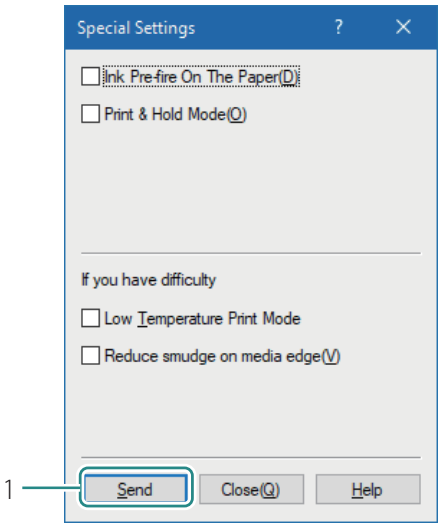

1. Click [Send].

● A confirmation message appears.

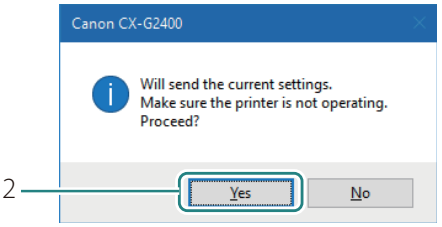

2. Click [Yes].

● The updated special settings are sent to the printer.

5 Finish updating the special settings.

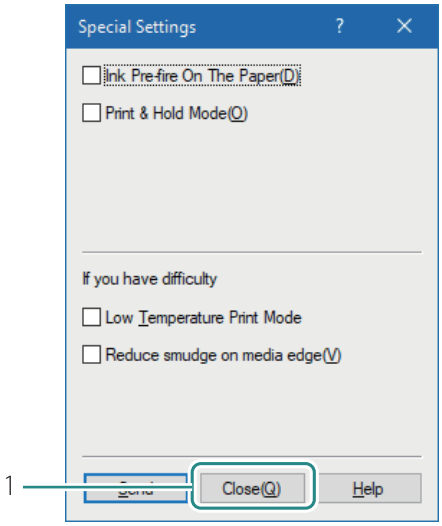

1. Click [Close].

Registering Paper Type

Allows the user to adjust ink jetting amounts and register them along with the paper type.

IMPORTANT

- Up to 100 custom paper types can be registered.
- Pre-registered paper types cannot be changed. (Matte Coated Paper, Glossy paper and Plastic Card)
- Administrative privileges over this printer are required to configure printer settings.
  If a user without administrative privileges proceeds with configuring printer settings, a message "You do not have rights to printer management. Please contact your system administrator." appears.
  For more details, see "Administrative privileges required for certain features (P.40)".
- **When increasing ink jetting amount for printing**
  Because this mode uses more ink than in usual printing, it may bleed through the paper, stain the edges or back of the paper, or the transport area.
  - Do not touch the printed surface until the ink dries.
  - If the print is dirty, clean the transport area.

1 Display the properties window of the printer. (P.32)

2 Display the [Add Custom Paper Type] dialog box.

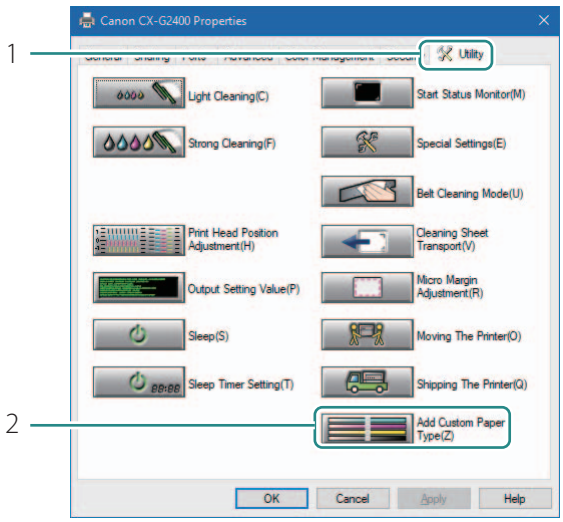

1. Click the [Utility] tab.
2. Click [Add Custom Paper Type].

3 Registering the new paper type.

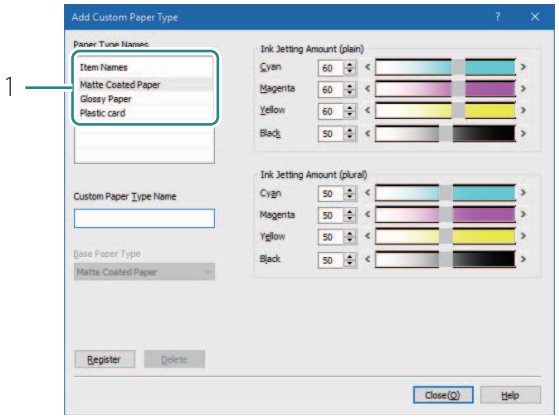

1. Select the profile from [Paper Type Names].

- Select from Matte Coated Paper, Glossy paper and Plastic card.

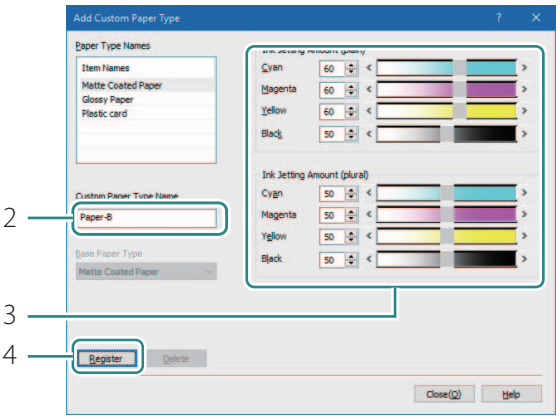

2. Enter the name of new paper type.

- Up to 31 characters can be entered.
- Spaces and tabs cannot be used.
- "*" cannot be used as the start character of the paper type name.

3. Set ink jetting amounts for respective colors.

- Moving the slider to the left decreases the ink jetting amount, and moving the slider to the right increases the ink jetting amount.
- Determine the ink jetting amounts optimum for the selected type of paper after conducting the print test several times.

4. Click [Register].

- A confirmation message will appear.

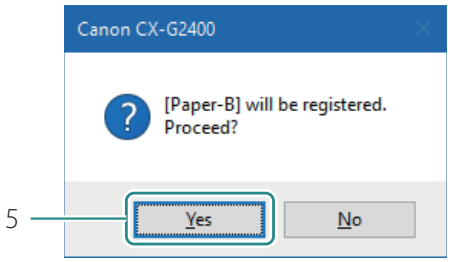

5. Click [Yes].

- The paper types are registered in [Paper Type Names].

NOTE

- A confirmation message will be displayed when registering a new media type that will increase the ink jetting amount. Review the message, and then click [Yes].

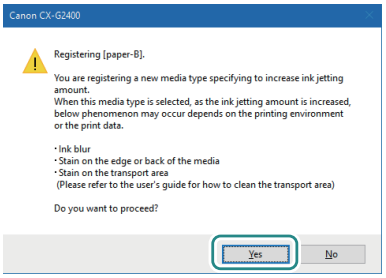

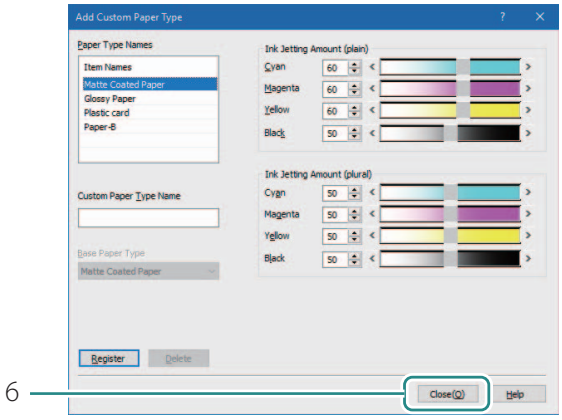

6. Click [Close].

4 Complete a test print to check the print result.

NOTE

- **Deleting a paper type**
  To delete a registered paper type, select it from the [Paper Type Names], and then click [Delete].

Chapter 3

Maintenance

Checking the Printer Status 92
Replacing the Ink Tank 95
Replacing the Maintenance Cartridge 102
Cleaning the Print Head 109
Adjusting Print Head Position 113
Checking the Setting Values 126
Cleaning the Printer 128

Checking the Printer Status

The status monitor allows you to check the current status of the printer.

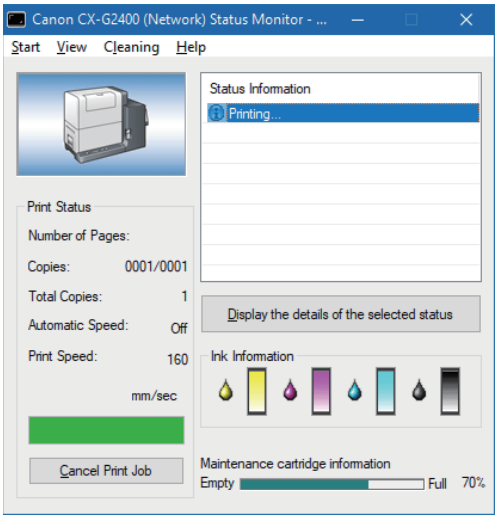

The printer status will be displayed using one of the following images.

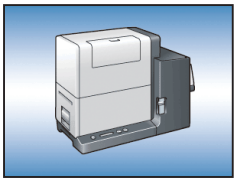

Displayed when the printer is in normal state. (Background is blue)
The printer is online and ready to print.

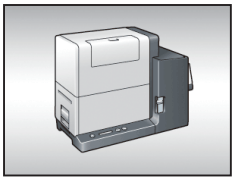

Displayed when the printer is offline. (Background is gray)

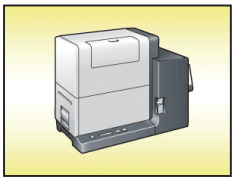

Displayed when a warning has been issued. (Background is yellow)
A warning message is displayed but printing can continue. Troubleshoot the problem as required.

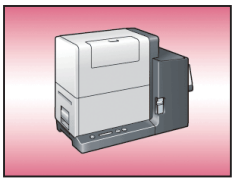

Displayed when an error has been issued. (Background is red)
An error message is displayed and printing cannot be continued. Troubleshoot the problem as required.

NOTE

- The status monitor allows you to check the current status of the printer, print status, ink information, and maintenance cartridge information.
- **Cancelling Printing**

  To cancel printing, click [Cancel Print Job] on the status monitor.
  All print data in process in the computer, current print jobs and print jobs that are received/processed are canceled.
- **Viewing the Status Information**

  The Status Information indicates the status of the printer by displaying the following four icons and messages.

  Information

  Warning message (P.165)

  Operator Call Error message (P.166)

  Service Call Error message (P.171)

How to Start and Display the Status Monitor

1 Open the Start menu and select the desired start option.

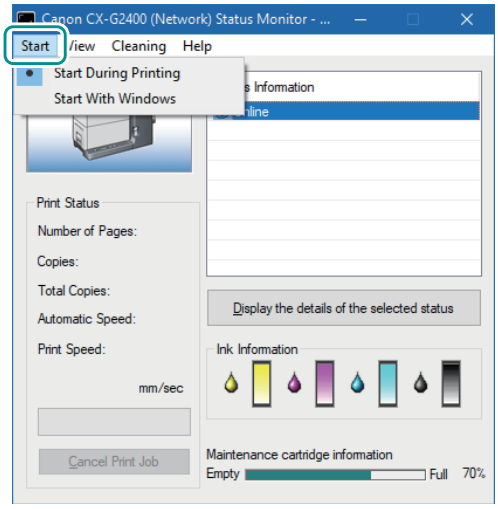

1. Select one of the following.

   [Start During Printing]

   The Status Monitor automatically starts when a print job starts. (This is the default setting.)

   [Start With Windows]

   The Status Monitor starts when Windows starts.

   A dot symbol (●) marks the currently selected item.

2 Open the View menu and select the desired option.

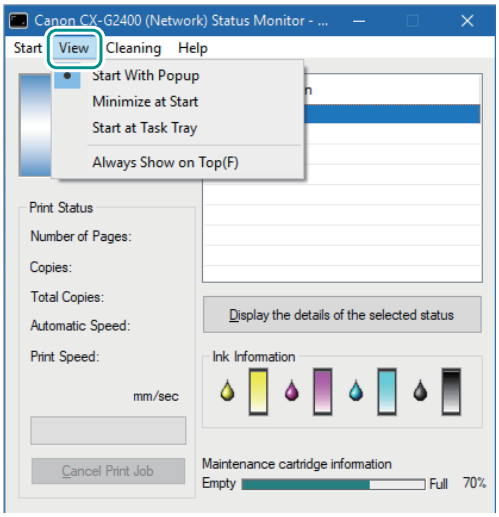

1. Select one of the following:

   [Start With Popup]

   Open and display the Status Monitor window. (This is the default setting.)

   [Minimize at Start]

   Minimize and store the open Status Monitor window on the taskbar.

   [Start at Task Tray]

   Create an icon for the open Status Monitor window and store the icon in the task tray.

   A dot symbol (●) marks the currently selected item.

NOTE

- To start the status monitor, click [Start Status Monitor] on the [Utility] tab.
- When an error occurs, the status monitor pops up automatically.
- To always display the window on top, click [Always Show On Top]. The Status Monitor will appear semi-transparent on the screen.

Replacing the Ink Tank

When an ink tank needs to be replaced, the corresponding ink lamp lights up and an error message "xxxx ink empty" appears on the status monitor.
The procedures for replacing the ink tank and checking the ink condition are described below.

Replacing the Ink Tank

CAUTION

- For safety, keep ink tanks out of the reach of children.
- If a child licks or swallows ink by mistake, consult a physician immediately.

IMPORTANT

- Using ink that is not genuine could result in reduction of print quality or a printer failure.
- Fixing a printer failure resulting from use of an ink tank which is not genuine should be paid for even within the maintenance contract period or warranty period.
- Replace each ink tank as quickly as possible. Do not leave the printer for a long period with any ink tanks removed.
- Do not store ink tanks in high temperature areas.
- Store ink tanks in a place not subjected to direct sunlight.
- In order to maintain high quality, install each ink tank in the printer before expiration of the "installation deadline" indicated on the shipping box. In addition, it is recommended that the ink tank be used up within six months of being unpacked.

NOTE

- Inks other than black ink may be used when characters represented only in black are printed or black-and-white prints are made. Cleaning performed to maintain the printer consumes all color inks. When there is no ink available for printing, replace the ink tank with a new one as soon as possible.

1 Replace the ink tank indicated by the ink lamp.

(Indication by Ink lamp)

- The Ink lamp lights up when the corresponding ink tank needs to be replaced.

(Indication on the status monitor)

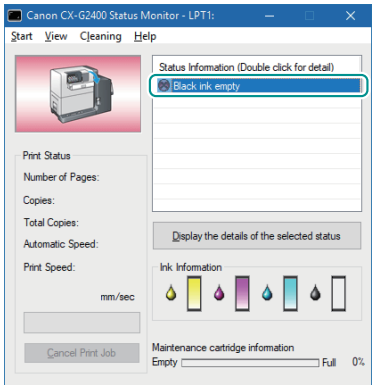

- An error message “XXXX ink empty” appears on the status monitor.
- (XXXX: Black, Cyan, Magenta, or Yellow)

2 Open the ink tank cover.

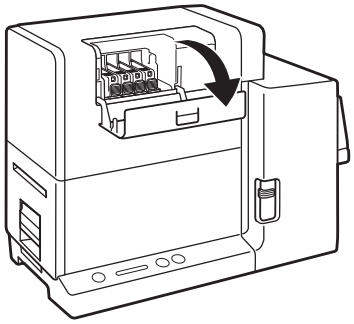

3 Remove the ink tank.

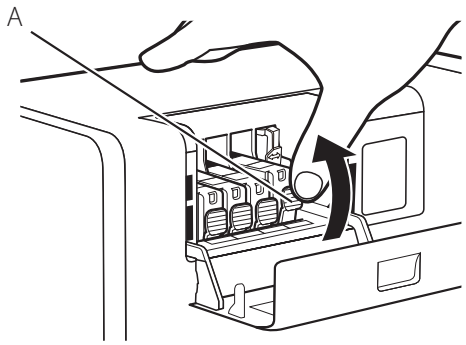

- Push the ink tank lock knob (A) and raise the ink tank to remove it.
- Do not remove two or more ink tanks at the same time. When replacing two or more ink tanks, be sure to replace the tanks one by one.

IMPORTANT

- Handle the ink tank carefully so that your clothes and the area around the printer are not stained with ink.
- Dispose the used ink tank according local laws and regulations.

4 Preparing the ink tanks.

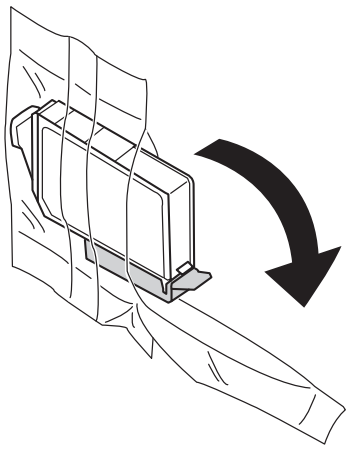

1. Remove a new ink tank from the plastic bag.

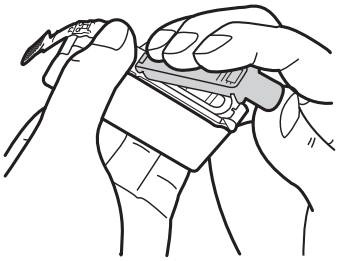

2. Remove the orange protective cap as shown in the figure.

- When removing the protective cap, be sure to hold the ink tank as illustrated to avoid getting ink on your fingers.
- Dispose the removed protective cap according to local laws and regulations.

IMPORTANT

- Do not press on the sides of the ink tank as ink could come out.

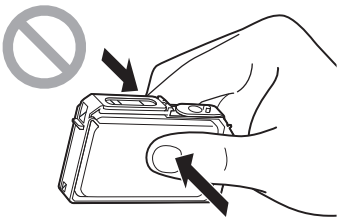

- Do not touch the ink tank contacts. The printer could fail in operation/ printing.
- Do not touch the ink supply opening. Ink could not be supplied properly.

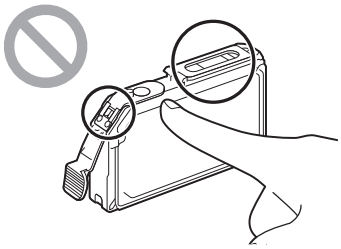

- Do not shake the ink tank with the ink supply opening down. Ink leaking from the ink supply opening could stain your clothes or the area around the printer.

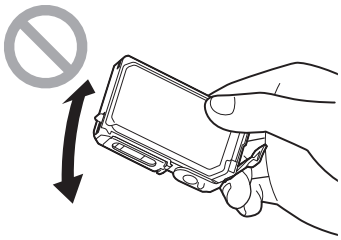

- Be careful to ensure that ink adhered on the removed protective cap does not get on your clothes or the area surrounding the printer.

5 Install the ink tank in the printer.

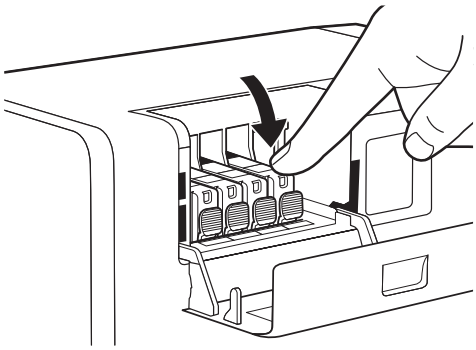

1. Insert the ink tank in the slot in the printer with the ink supply opening down.

- Before installing each ink tank, match the ink color with the corresponding label.

2. Press on the top of the ink tank until the ink tank clicks into place.

IMPORTANT

- Install each ink tank in the printer according to the color indicated on the label.
  If any ink tank is installed in a wrong position, the printer cannot print. In addition, ink colors could be mixed, resulting in poor print quality.
- The printer cannot print until all ink tanks are properly installed.

6 Close the ink tank cover.

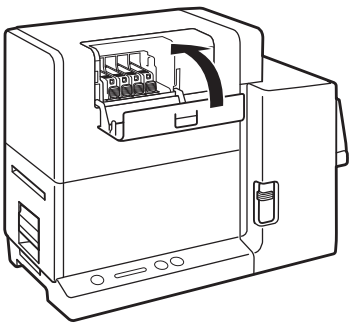

Checking the Ink Information

The ink condition will be indicated on the status monitor and by the Ink lamps.

Indication by Ink lamp	Indication on status monitor	Status
Lit 	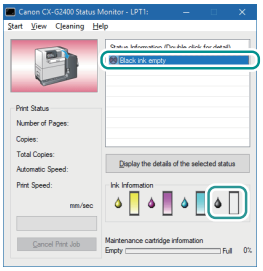	• The ink tank must be replaced.
Blinking 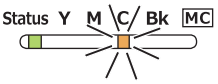	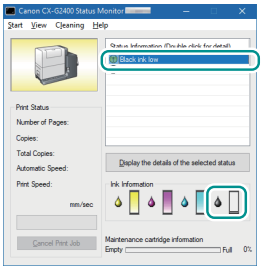	• The ink tank is low. Remaining ink level: About 10% (It is recommended to have a new ink tank ready.)
Off 	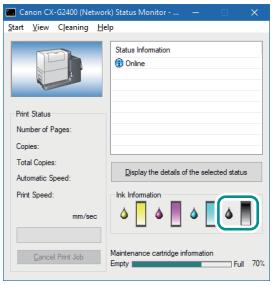	• The ink tank is full.

The pictures of ink tanks shown on the status monitor stand for yellow (Y), magenta (M), cyan (C), and black (Bk) ink tanks from left.

IMPORTANT

- For details on how to purchase a new ink tank, contact your place of purchase.
- After a warning message "XXXX ink low" ("XXXX": Black, Cyan, Magenta, or Yellow) is displayed, the number of print head cleaning increases and therefore the printing time also increases.
  To prioritize printing time, replace a low ink tank with a new one.

Replacing the Maintenance Cartridge

When the maintenance cartridge becomes full of collected ink, the Maintenance Cartridge lamp lights up and a message “Maintenance cartridge full” appears on the status monitor.

Replacing the Maintenance Cartridge

When the maintenance cartridge becomes full, replace it with a new one following the procedure described below.

CAUTION

- For safety, keep the used maintenance cartridge out of the reach of children.
- If a child licks or swallows ink, consult a physician immediately.

IMPORTANT

- Do not leave the printer for a long time with the maintenance cartridge removed.
- Do not insert or remove the maintenance cartridge except when replacing it.
- Place the used maintenance cartridge in the attached plastic bag, zip the plastic bag closed completely, and then dispose of it.
- Do not shake or strongly press on the maintenance cartridge. Do not hold the maintenance cartridge with the ink inlet down. Ink leaking from the ink inlet could stain your clothes or the area around you.

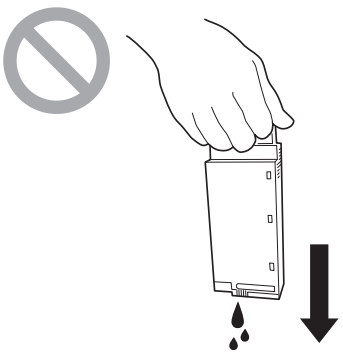

1 Take out a new maintenance cartridge from the box.

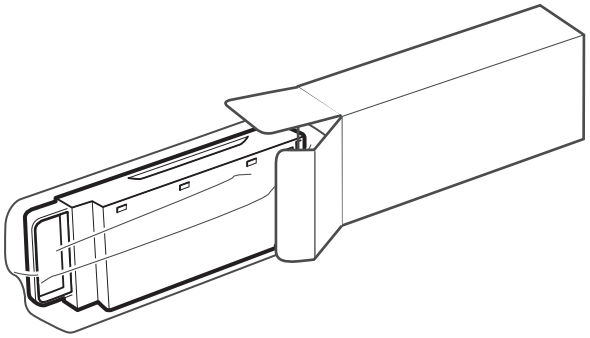

2 Pull the transport unit out of the printer.

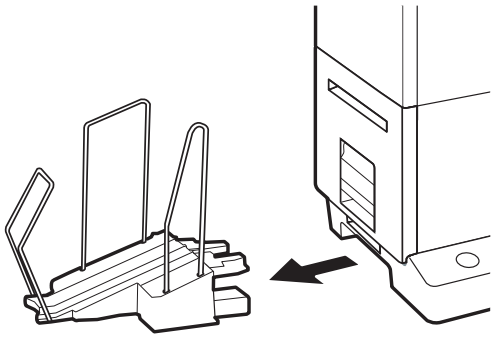

1. Remove the stacker if it is used.

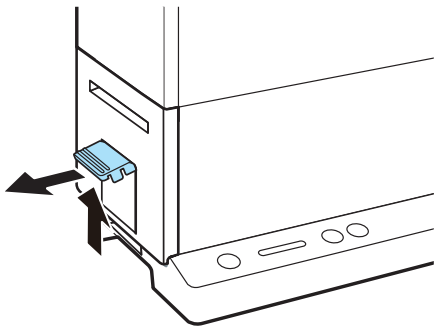

2. Raise the transport unit lever, and pull the transport unit out.

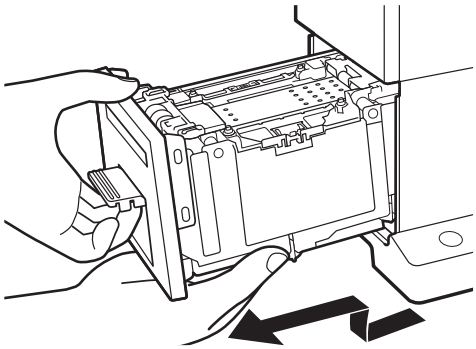

3. Pull the transport unit out with both hands as shown in the figure.

CAUTION

- When pulling the transport unit out of the printer, hold it firmly with both hands so that it does not fall.
- Do not put your hands into inside of the printer. Failure or physical injury could result. Further, your hands or clothing may get dirty with ink adhered inside of the printer.

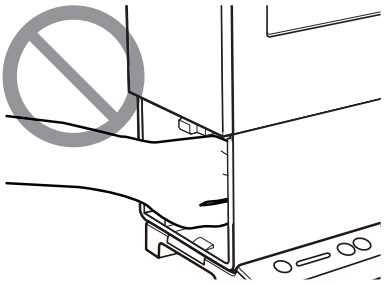

IMPORTANT

- When pulling the transport unit out of the printer or inserting it in the printer, be careful not to hit it strongly against the table or shelf. The surface of the table or shelf could be damaged.

3 Pull out the maintenance cartridge filled with ink.

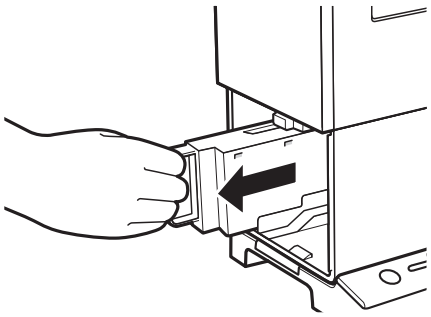

1. Slowly pull the maintenance cartridge out.

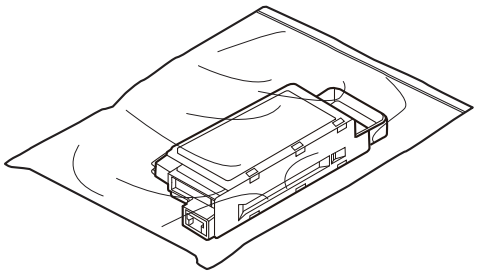

2. Place the used maintenance cartridge in the plastic bag.

- A new maintenance cartridge comes with a plastic bag to put the used maintenance cartridge in.

3. Zip the plastic bag completely closed.

IMPORTANT

- Do not shake or strongly press on the maintenance cartridge or hold it with the ink inlet down. Ink leaking from the ink inlet could stain your clothes or the area around you.

4 Install the new maintenance cartridge.

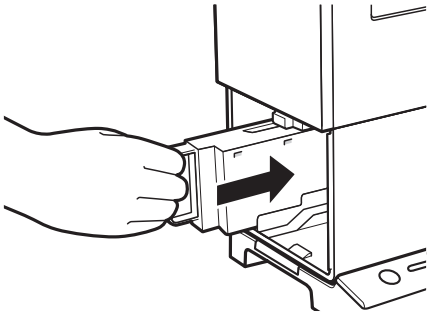

- Insert the maintenance cartridge as far as it will go.

5 Set the transport unit in the printer.

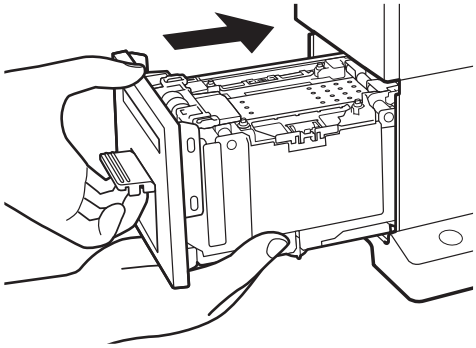

1. Slowly insert the transport unit as far as it will go.

- As you do this, be careful not to touch the paper guides doing so will change their positions.

⚠ CAUTION

- When inserting the transport unit, be careful not to get your fingers caught between the transport unit and the main body of the printer.

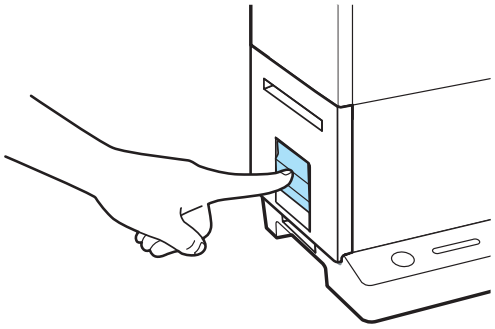

2. Push the transport unit lever until it clicks.

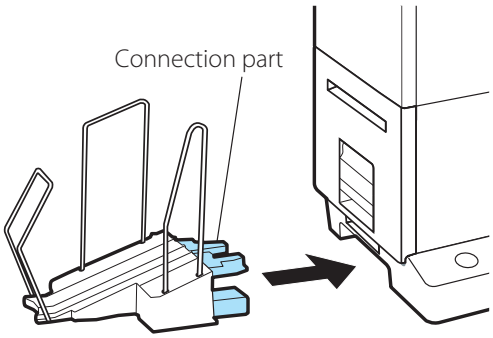

3. When using the stacker, install it back to the correct position.

- Insert the connection part of the stacker straight into the slot of the printer.

IMPORTANT

- Do not store the used maintenance cartridge with the ink inlet down. Ink leaking from the ink inlet could stain your clothes or the area around you.
- Dispose the used maintenance cartridge according to local laws and regulations.

Checking the Status of the Maintenance Cartridge

The maintenance cartridge information will be indicated on the status monitor and by the Maintenance Cartridge Lamp.

Indication by Maintenance Cartridge lamp	Display on status monitor	Status
Lit 	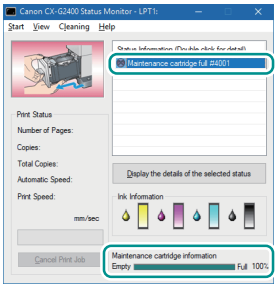	• The maintenance cartridge is full and must be replaced.
Blink 	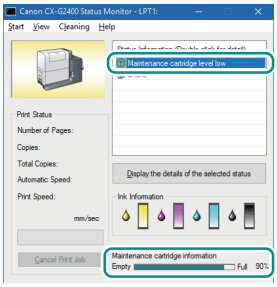	• The maintenance cartridge has limited free space. Free space: About 10% (It is recommended to have a new maintenance cartridge ready.)
Off 	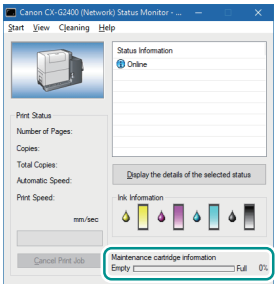	• The maintenance cartridge has free space.

IMPORTANT

- For details on how to purchase a new maintenance cartridge, contact your place of purchase.

Cleaning the Print Head

If the printed result is faint, print head nozzles may be clogged with paper dust, etc. When nozzles are clogged, perform print head cleaning.

IMPORTANT

- When printing is in progress or an error has occurred, cleaning cannot be performed.
- When cleaning is in progress, do not perform any other operation.
- Since cleaning consumes inks, clean only when necessary. Note that strong cleaning consumes more ink than normal cleaning (light cleaning).

Normal Cleaning (Light Cleaning)

1 Open the printer driver setup window. (P.31)

2 Begin light cleaning of the print head.

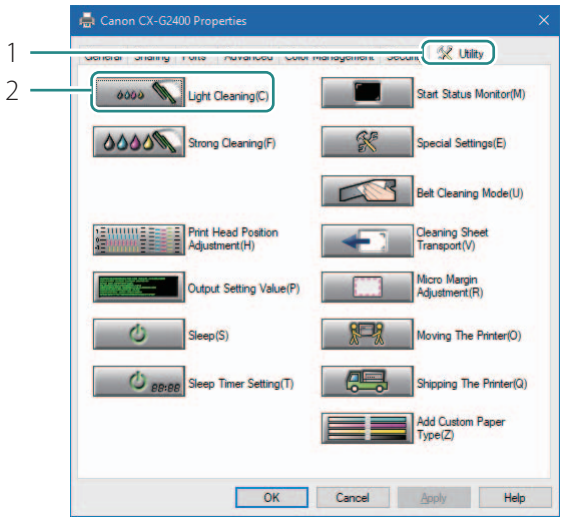

1. Click the [Utility] tab.
2. Click [Light Cleaning].

- A confirmation message will appear.

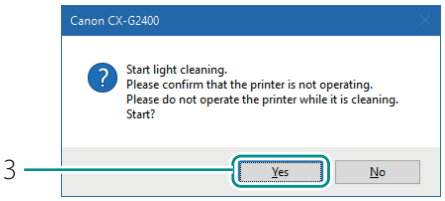

3. Review the displayed message and then click [Yes].

- Light cleaning begins.
- When cleaning is in progress, do not perform any other operation. It takes about 4 minutes to finish the cleaning.

NOTE

- If printing is still faint after the completion of light cleaning, perform strong cleaning (P.111)
- **Cleaning During Printing**

  You can stop printing temporarily to perform cleaning.

  1. Press the Pause key.
  2. Select [Light Cleaning] or [Strong Cleaning] from the [Cleaning] menu on the status monitor.

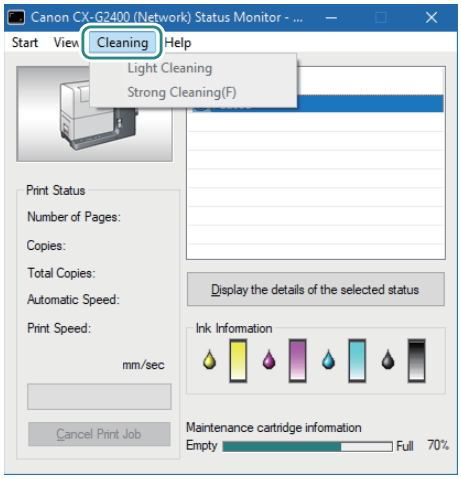

Strong Cleaning

If print is faint after completion of normal cleaning (light cleaning), perform strong cleaning.

IMPORTANT

- Since strong cleaning consumes more ink than normal cleaning (light cleaning), clean only when necessary.

1 Open the printer driver setup window. (P.31)

2 Perform strong cleaning.

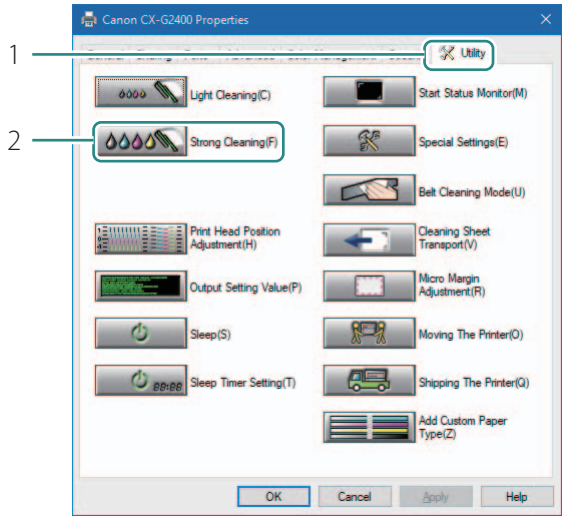

1. Click the [Utility] tab.
2. Click [Strong Cleaning].

- A confirmation message appears.

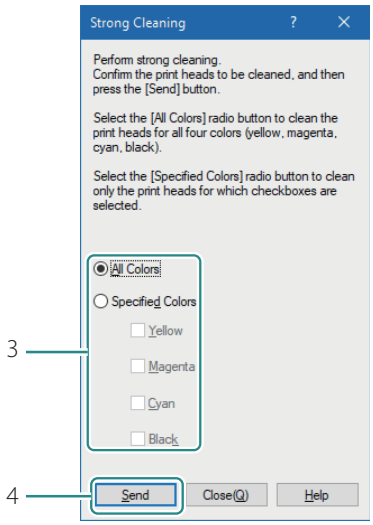

3. Select the ink colors corresponding to the nozzles you want to clean.

   [All Colors]
   Select this to clean nozzles for all colors together.

   [Specified Colors]
   Select this when specific colors are faint.
   The nozzels that correspond to the check boxes selected will be cleaned.

4. Click [Send].

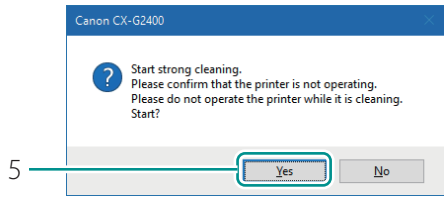

5. Review the displayed message and then click [Yes].

- Strong cleaning begins.
- When cleaning is in progress, do not perform any other operation. It takes about 8 minutes to finish the cleaning.

NOTE

- If strong cleaning does not unclog the print head, replacement of the print head may be required. Contact your place of purchase.

Adjusting Print Head Position

Adjust the print head position if a color shift is found.
To adjust the print head position, print adjustment patterns and enter adjustment values while looking at the printed adjustment patterns.

IMPORTANT

- Administrative privileges over this printer are required to configure printer settings.
  If a user without administrative privileges proceeds with printer settings configuration, a message "You do not have rights to printer management. Please contact your system administrator." appears.
  For more details, see "Adjusting the Reference Position (P.117)".
- Print head position cannot be adjusted when printing is in progress or an error has occurred.

1 Check that paper is set in the printer.

2 Open the properties window of the printer. (P.32)

3 Display the [Print Head Position Adjustment] dialog box.

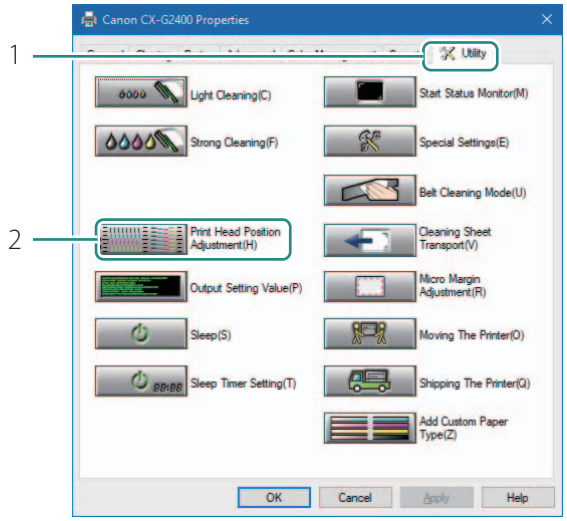

1. Click the [Utility] tab.
2. Click [Print Head Position Adjustment].

NOTE

- Clicking [The details of the adjustment method are here] in the [Print Head Position Adjustment] dialog box will display the help screen showing the print head adjustment method.

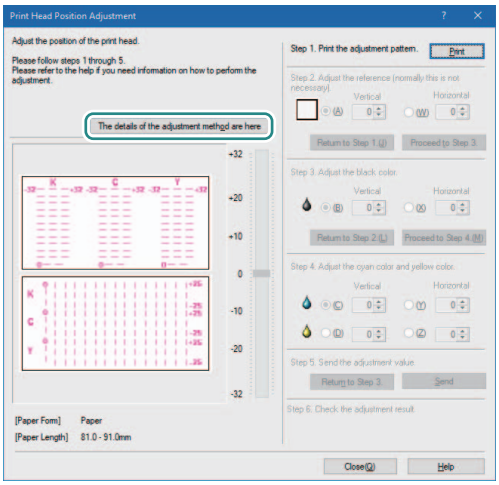

4 [Step 1] Print adjustment patterns.

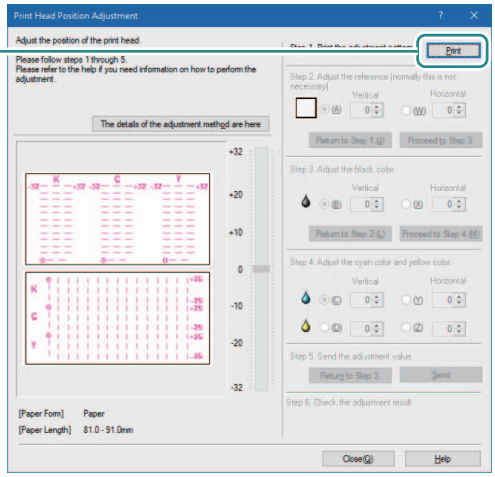

1. Make sure the printer is not operating and then click [Print].

- A confirmation message will appear.

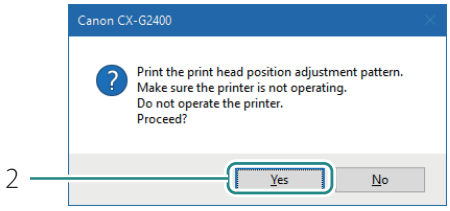

2. Review the displayed message, and then click [Yes].

- Printing of adjustment patterns will begin.

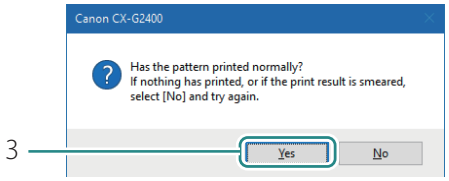

3. If the adjustment patterns have printed correctly, click [Yes].

- If you select [No], adjustment patterns will be printed again.

5 Check the print head adjustment patterns.

Check whether inks are injected from the print head normally, and the print head position is not deviated. The print head adjustment patterns include a “print head position adjustment pattern (portrait)” for measuring the print head deviation in the transport direction, a “print head position adjustment pattern (landscape)” for measuring the print head deviation in the direction perpendicular to the transport direction, and a black frame for checking the reference position of each ink.

Transport direction

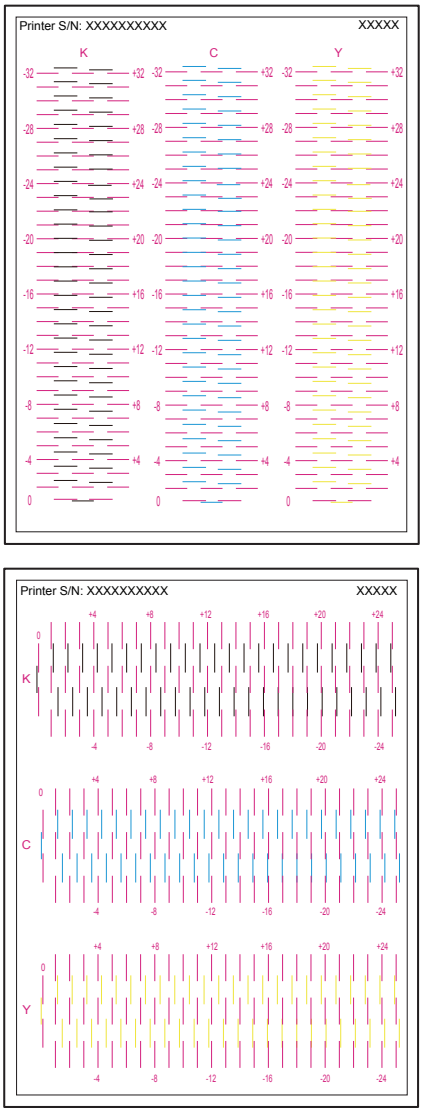

6 [Step 2] Check the reference position.

Check whether the black frame is centered on the paper.
If the black frame is not centered, adjust the reference position. (Normally, it is not necessary to adjust the reference position.)

2

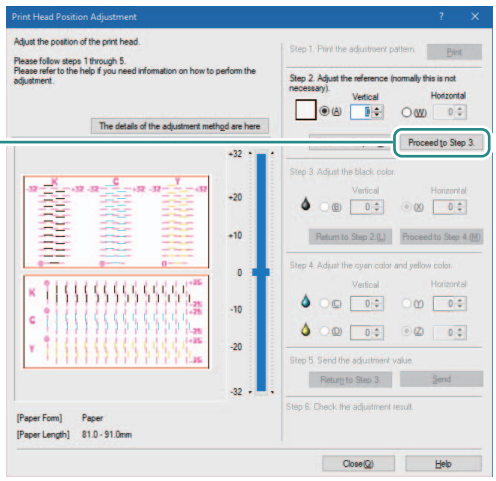

1. Check whether the black frame is centered on the paper.

- The top line of the black frame must be located 1.5 mm (0.06 inch) below the upper edge of the paper, and the left line of the black frame must be located 2.0 mm (0.08 inch) away from the left edge of the paper. If the black frame is deviated significantly, adjust the reference position (P.117)

2. Click [Proceed to Step 3].

NOTE

- **Adjusting the Reference Position**

  When the reference position is correct, the top line of the black frame is located 1.5 mm (0.06 inch) below the upper edge of the paper and the left line of the black frame is located 2.0 mm (0.08 inch) away from the left edge of the paper. Adjust the reference position only when it is deviated significantly.

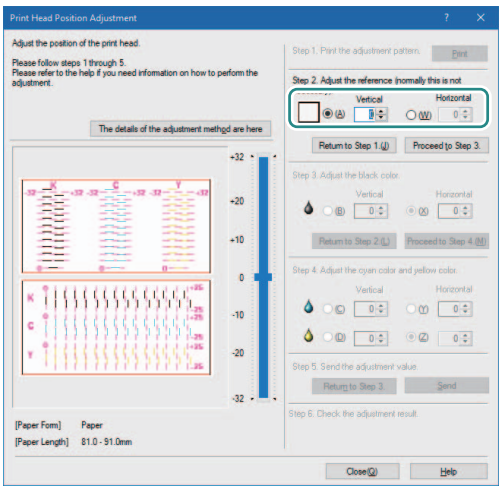

- Vertical adjustment:
  If the black frame is shifted upward, specify a negative (-) value. If the black frame is shifted downward, specify a positive (+) value.
  Click the button (A) and then specify the adjustment value.
- Horizontal adjustment:
  If the black frame is shifted leftward, specify a positive (+) value. If the black frame is shifted rightward, specify a negative (-) value.
  Click the button (W) and then specify the adjustment value.

- To specify the adjustment value, move the slider or enter a value directly in the entry box (spinner) interlocked with the slider.
- Changing the value by 1 will move the black frame 0.0212 mm (0.0008 inch) upward/downward/leftward/rightward.
- The vertical adjustment range is from -32 to +32, and the horizontal adjustment range is from -25 to +25. However, the adjustment range may be limited depending on the current setting. Specify the adjustment value between ▲ and ▼ shown on the slider scale.
- To retry from [Step 1] (printing of adjustment patterns), click [Return to Step 1].

7 [Step 3] Adjust the print head position for black.

Adjust the print head position for black while looking at the adjustment pattern [K].

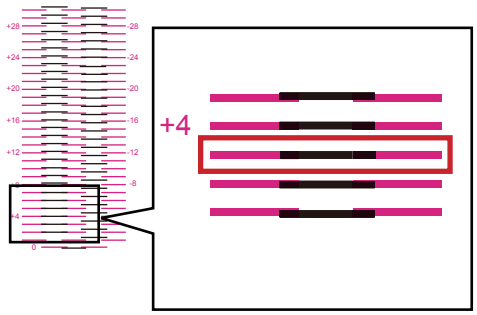

1. Read the vertical adjustment value in the adjustment pattern [K].

● The adjustment value is found on the left of the magenta and black lines which appear to be smoothly connected. (without steps)
For example, in the pattern shown on the left, the adjustment value is +3.

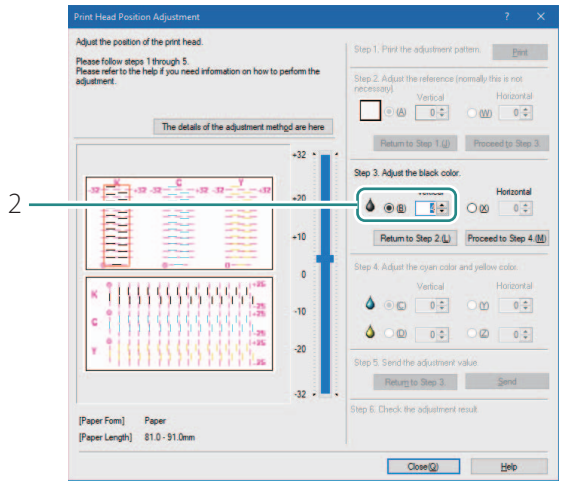

2. Click the button (B) and then specify the vertical adjustment value.

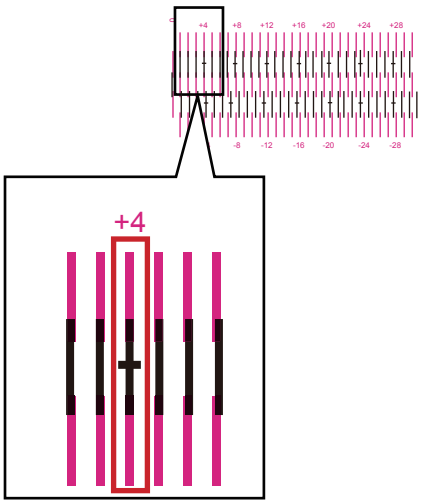

3. Read the horizontal adjustment value in the adjustment pattern [K].

- The adjustment value is found at the top of the magenta and black lines which appear to be smoothly connected. (without steps)
  For example, in the pattern shown on the left, the adjustment value is +4.

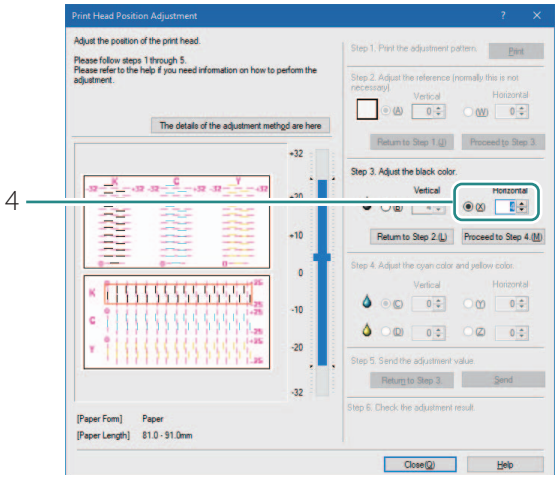

4. Click the button (X) and then specify the vertical adjustment value.

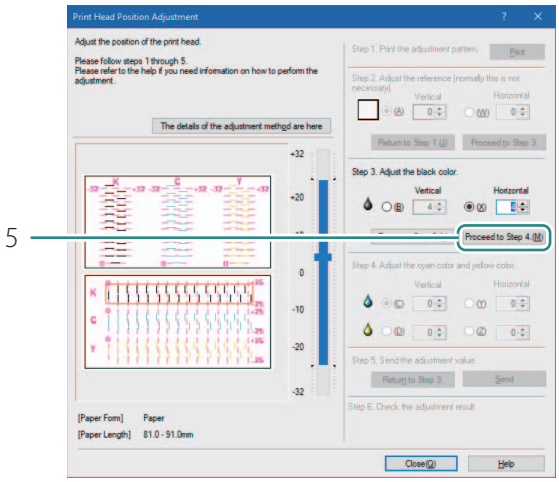

5. Click [Proceed to Step 4].

NOTE

- To specify the adjustment value, move the slider or enter a value directly in the entry box (spinner) interlocked with the slidebar.
- The vertical adjustment range is from -32 to +32, and the horizontal adjustment range is from -25 to +25. However, the adjustment range may be limited depending on the current setting. Specify the adjustment value between ▲ and ▼ shown on the slider scale.
- To retry from [Step 2] (adjustment of the reference position), click [Return to Step 2].

8 [Step 4] Adjust the print head position for cyan and yellow.

Adjust the print head position for cyan while looking at the adjustment pattern [C], and adjust the print head position for yellow while looking at the adjustment pattern [Y].

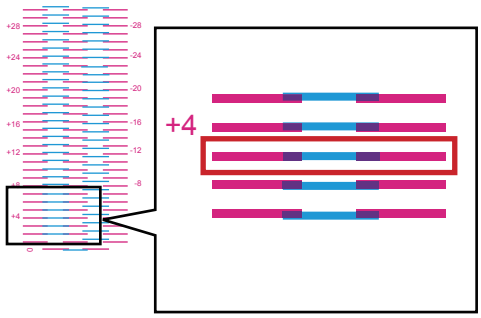

1. Adjust the print head position for cyan. Read the vertical adjustment value on the adjustment pattern [C].

- The adjustment value is found on the left of the magenta and cyan lines which appear to be smoothly connected. (without steps)
  For example, in the pattern shown on the left, the adjustment value is +3.

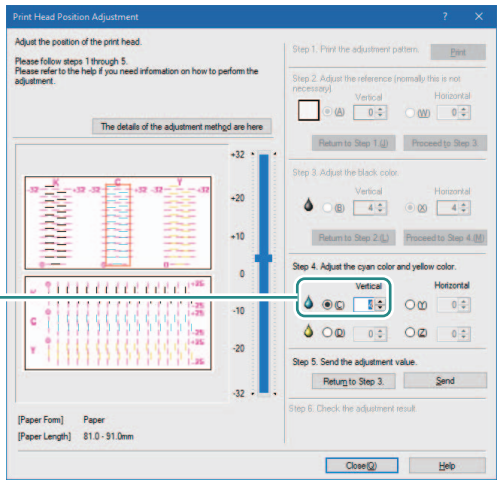

2. Click the button (C) and then specify the vertical adjustment value.

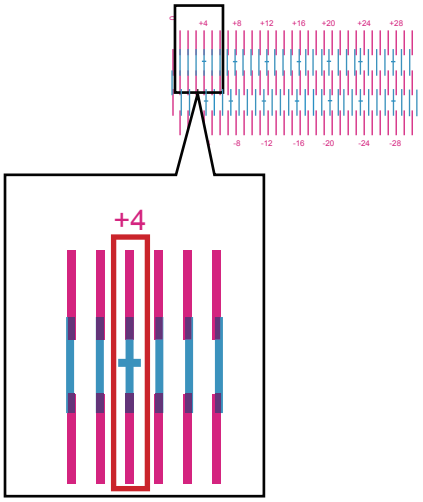

3. Read the horizontal adjustment value on the adjustment pattern [C].

- The adjustment value is found at the top of the magenta and cyan lines which appear to be smoothly connected. (without steps)
  For example, in the pattern shown on the left, the adjustment value is +4.

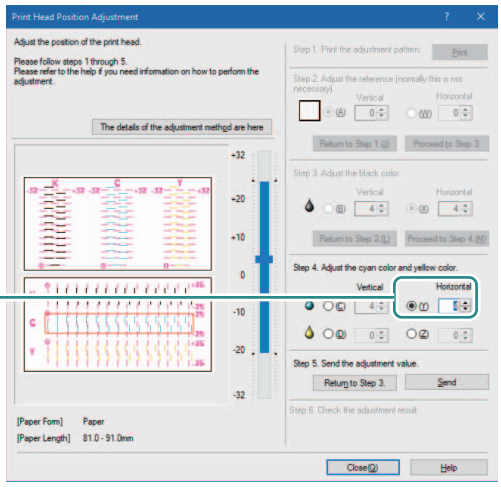

4. Click the button (Y) and then specify the horizontal adjustment value.

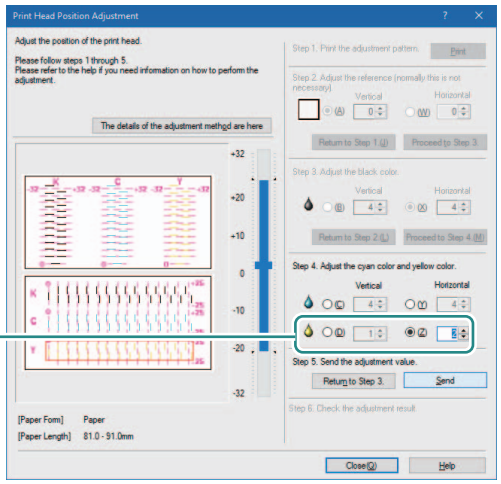

5. Adjust the print head position for yellow. (Adjustment pattern [Y])
Read the vertical and horizontal adjustment values in the same manner as cyan and then click radio buttons (D) and (Z) one after another to specify the vertical and horizontal adjustment values.

NOTE

- To specify the adjustment value, move the slider or enter a value directly in the entry box interlocked with the slider.
- The vertical adjustment range is from -32 to +32, and the horizontal adjustment range is from -25 to +25. However, the adjustment range may be limited depending on the current settings. Specify the adjustment value between ▲ and ▼ shown on the slider scale.
- To retry from [Step 3] (adjustment of the print head position for black), click [Return to Step 3].

9 [Step 5] Send the adjustment values to the printer.

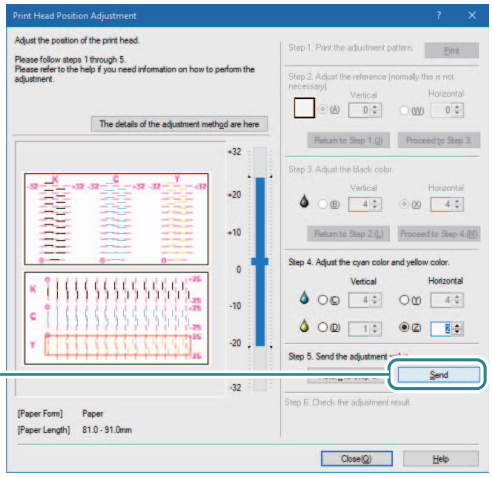

1. Click [Send].

- A confirmation message will appear.

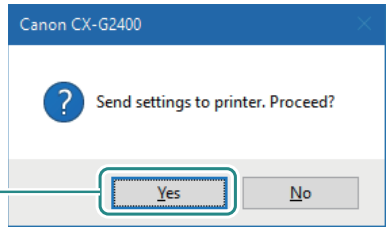

2. Click [Yes].

- The print head position is adjusted.

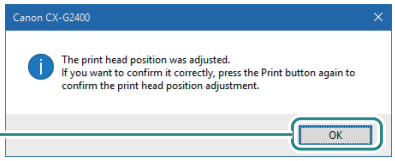

3. Click [OK].

10 Print adjustment patterns again.

1

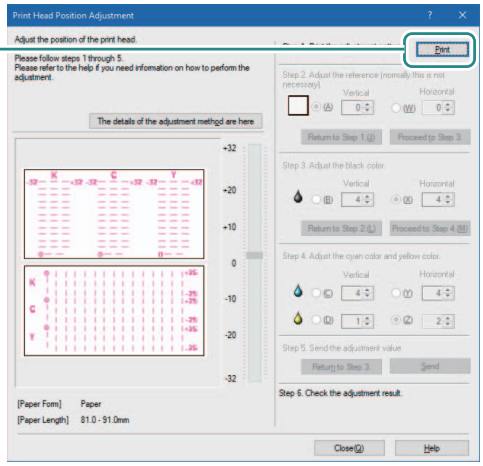

1. Click [Print].

- A confirmation message will appear.

2

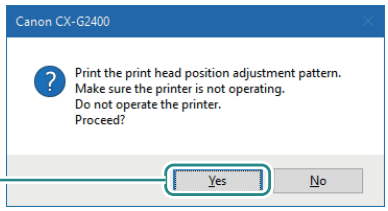

2. Review the displayed message and then click [Yes].

- Printing of adjustment patterns begins.

3

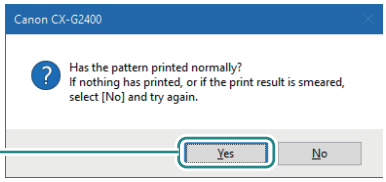

3. When adjustment patterns have been printed normally, click [Yes].

- If you select [No], printing patterns will be printed again.

11 Check the adjustment patterns after the adjustment of the head position.

Make sure the lines of each color are smoothly connected at “0” on the adjustment patterns.
If the lines appear to be out of alignment (stepped), readjustment is required.

12 Complete the print head position adjustment procedure.

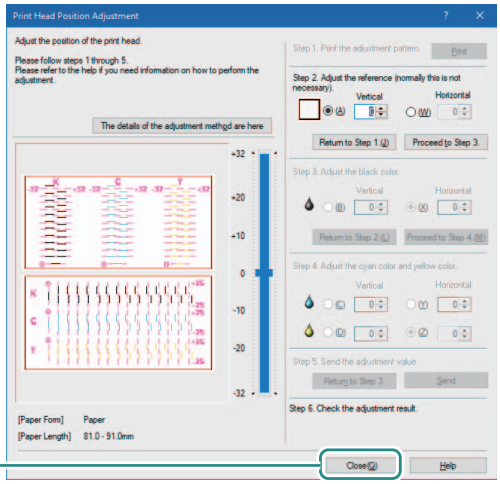

1. Click [Close].

- A confirmation message will appear.

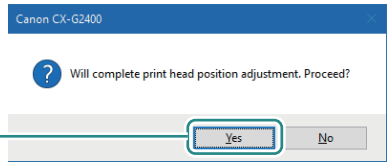

2. Click [Yes].

Checking the Setting Values

How to print information about the current settings of the printer.
Select the printer or a file (*.txt) as the output destination.

IMPORTANT

- The setting information cannot be printed when printing is in progress or an error has occurred.

1 When printing the setting information, check that paper is set in the printer.

2 Open the printer driver setup window. (P.31)

3 Output the current settings.

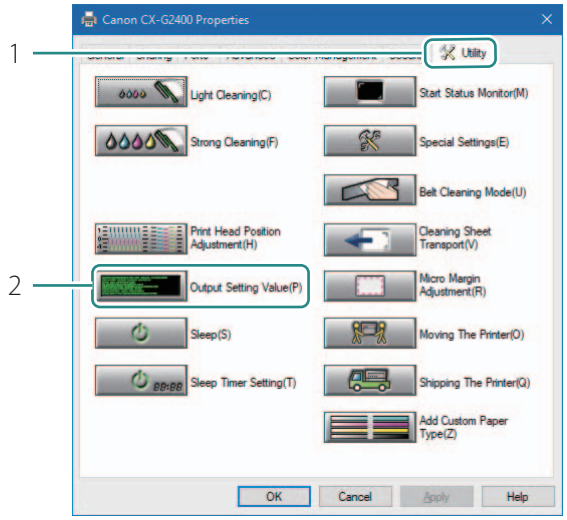

1. Click the [Utility] tab.
2. Click [Output Setting Value].

- The [Output Setting Value] dialog box appears.

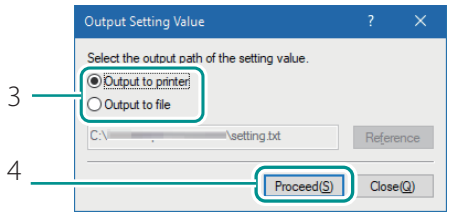

3. Select an output destination.

- When you selected the "Output to file": Click [Reference], and select the storage location of the file.

4. Click [Proceed].

   The setting values are output.

NOTE

- How to Read the Output Setting Values

```
CX-G2400
Printer Serial Number ..... XX XXXX
Firmware ROM Version ..... Ver.XX.XX
Date and Time ..... dd/mmm/20yy XX:XX
Printhead Position Adjustment
  Paper Form : Paper                K / C / M / Y
    Length: 81.0-91.0mm   V  X / X / X / X
                          H  X / X / X / X
    Length: 157.0-172.0mm V  X / X / X / X
                          H  X / X / X / X
  Paper Form : Card (20-30mil)
    Length: 81.0-91.0mm   V  X / X / X / X
                          H  X / X / X / X
    Length: 157.0-172.0mm V  X / X / X / X
                          H  X / X / X / X

Micro Margin Adjustment
        Top ---------- X mm
        Bottom ------- X mm
        Left --------- X mm
        Right -------- X mm
Ink Pre-fire on the Paper -------- OFF
Low Temperature Mode ------------- OFF
Clean Edge Mode ------------------ OFF
Print Hold Mode ------------------ OFF
Sleep Timer Setting -------------- X min
Power Off Timer Setting ---------- X min
Ethernet Information
    Use DHCP ------------------------ OFF
    Mac Address --------------------- X
    IP Address ---------------------- X
    Subnet Mask --------------------- X
    Default Gateway ----------------- X
Ink Level Detection Mode ---------- Enabled
    Black Ink Tank ------------------ Enabled
    Cyan Ink Tank ------------------- Enabled
    Magenta Ink Tank ---------------- Enabled
    Yellow Ink Tank ----------------- Enabled
```

- Serial Number of Printer
- Firmware ROM Version
- The print date and time
- Vertical adjustment value and Horizontal adjustment value of each print head (Bk/C/M/Y)
- When the paper form is "paper"
- When the paper form is "Card(20-30mil)"
- Micro Margin Adjustment value
- Ink Pre-fire on the Paper (Auto/ON/OFF)
- Low Temperature Mode (ON/OFF)
- Reduce smudge on media edge (ON/OFF)
- Print Hold Mode (ON/OFF)
- Sleep Timer Setting
- Power Off Timer Setting
- DHCP (ON/OFF)
- Mac Address
- IP Address
- Subnet Mask
- Default Gateway
- Each ink level detection function (Bk/C/M/Y) (Enabled/Disabled)

Cleaning the Printer

Clean the printer periodically to preserve the print quality and prevent issues.

WARNING

- When cleaning the printer, do not use a flammable solvent such as alcohol or thinner.
  If it is brought into contact with the electric parts inside the printer, a fire or electric shock could result.

Cleaning the exterior of the printer

To preserve the print quality, periodically clean the exterior of the printer.

CAUTION

- Prior to cleaning the printer, be sure to turn if off and unplug the power cord.

1 Turn off the printer. (P.8)

IMPORTANT

- While the Power lamp is lit or blinking, do not remove the power plug from the outlet. A printer failure could result.

2 Disconnect the power cord and interface cable.

3 Wipe the exterior clean with a damp cloth thoroughly wrung out.

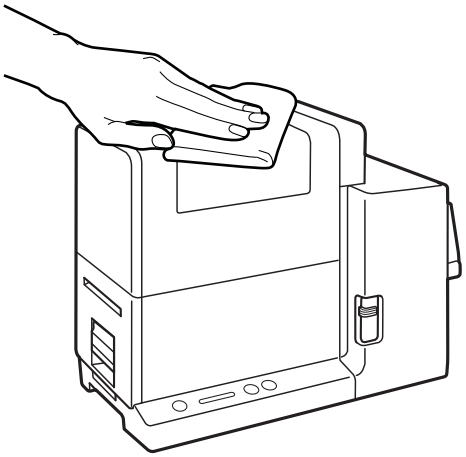

4 Connect the power cord and interface cable.

Cleaning the Transport Unit

If printed paper is stained or paper cannot be fed properly, the transport unit may be stained. Clean the transport unit periodically.

■ Cleaning the periphery of the transport path

1 Pull the transport unit out of the printer.

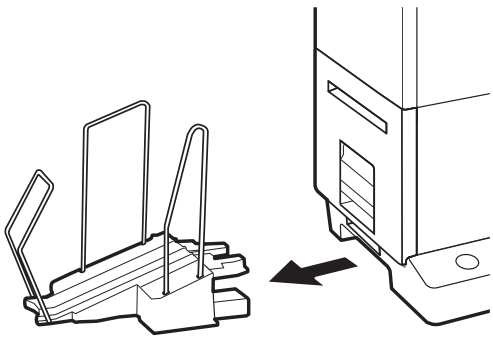

1. Remove the stacker if it is used.

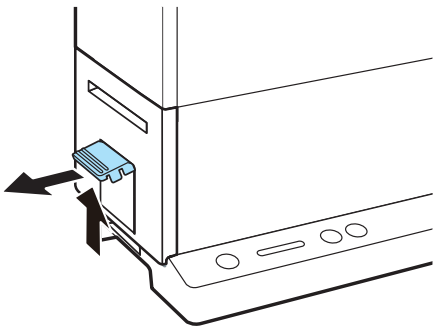

2. Raise the transport unit lever, and pull the transport unit out.

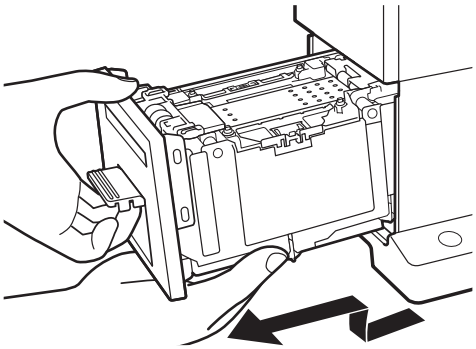

3. Pull the transport unit out with both hands as shown in the figure.

CAUTION

- When pulling the transport unit out of the printer, hold it securely with both hands so that it does not fall down.
- Do not put your hands inside the printer. Failure or physical injury could result. Ink adhered inside of the printer could stain clothes or hands.

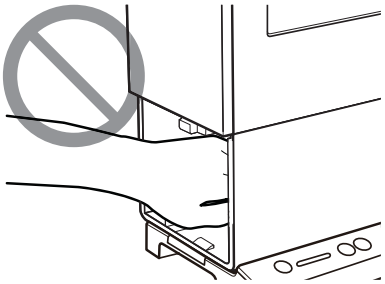

IMPORTANT

- When pulling the transport unit out of the printer or inserting it in the printer, be careful not to hit it strongly against the table or shelf. The surface of the table or shelf could be damaged.

2 Wipe the transport unit with a dry, lint free cloth.

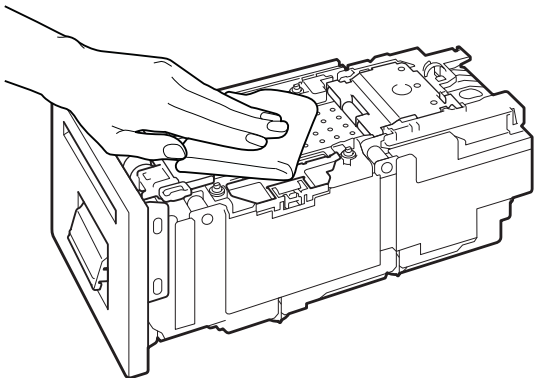

1. Wipe the stain and paper dust off of the paper guides and other peripheral areas of the transport path.

- Clean the transport belt by rotating the belt one-fourth of the way at a time. For details on cleaning the transport belt, see "Cleaning the Transport Belt (P.136)".

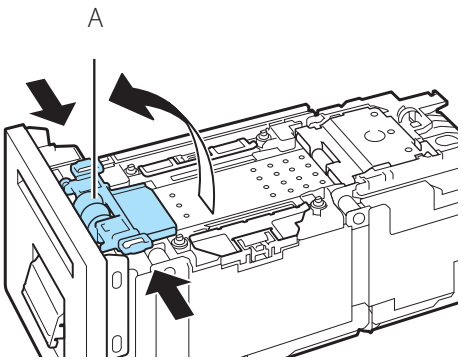

2. Open the paper retainer (A).

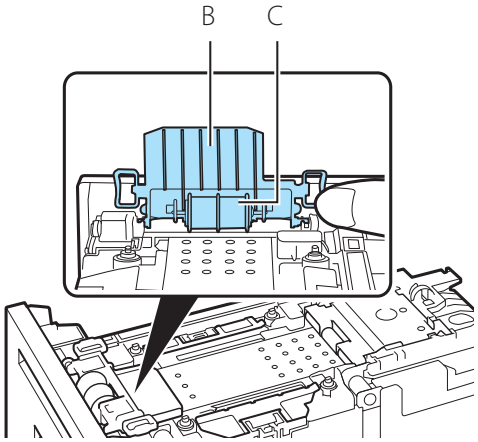

3. Wipe the ink stain and paper dust off of the back side of the paper retainer (B) and roller (C)

- Clean the roller while rotating it.

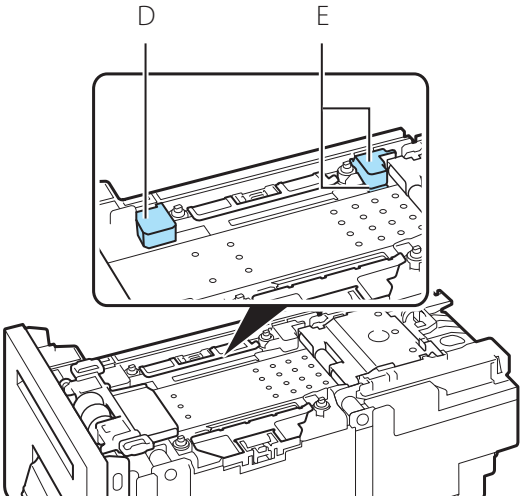

4. Wipe ink and paper dust off the sensors (D and E)

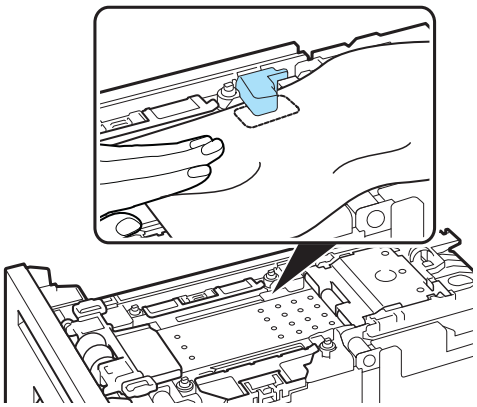

- To clean the sensors (C and D), pass a cloth under them.

5. Close the paper retainer.

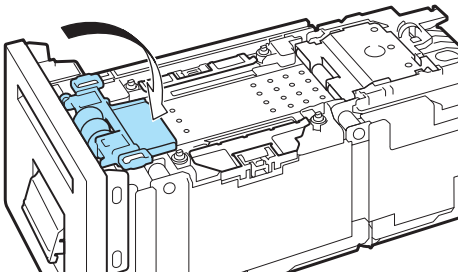

IMPORTANT

- Do not use a paper towel or tissue. If a torn piece or dust of the paper towel or tissue enters inside of the printer, a printer failure could result.
- When cleaning, be careful not to damage the transport path film (F).

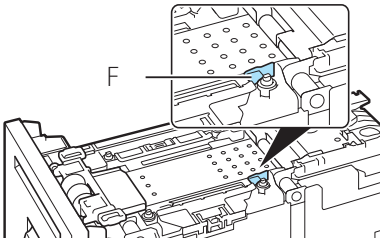

3 Set the transport unit in the printer.

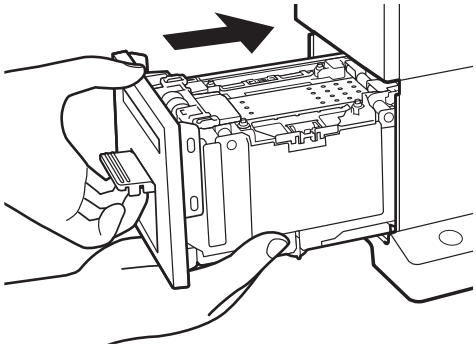

1. Slowly insert the transport unit as far as it will go.

- As you do this, be careful not to touch the paper guides doing so will change their positions.

CAUTION

- When returning the transport unit back inside the printer, be careful not to get your fingers caught between the transport unit and the inside body of the printer.

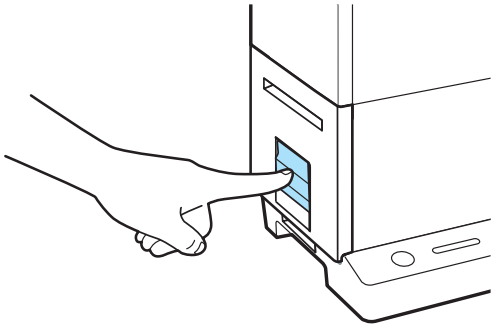

2. Push the transport unit lever until it clicks.

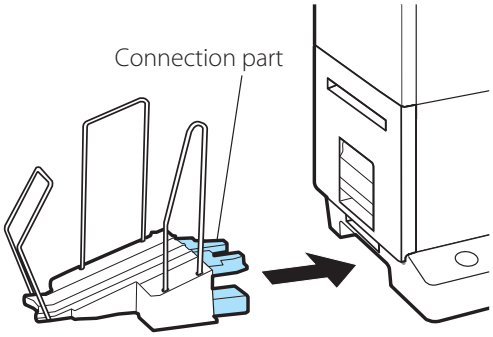

3. When using the stacker, install it back to the correct position.

- Insert the connection part of the stacker straight into the slot of the printer.

■ Cleaning the Transport Belt

IMPORTANT

- Administrative privileges over this printer are required to configure printer settings.
  If a user without administrative privileges proceeds with configuration of settings, a message "You do not have rights to printer management. Please contact your system administrator." appears.
  For more details, see "Administrative privileges required for certain features (P.40)".
- When printing is in progress or an error has occurred, [Belt Cleaning Mode] cannot be executed.

1 Open the properties window of the printer. (P.32)

2 Perform belt cleaning.

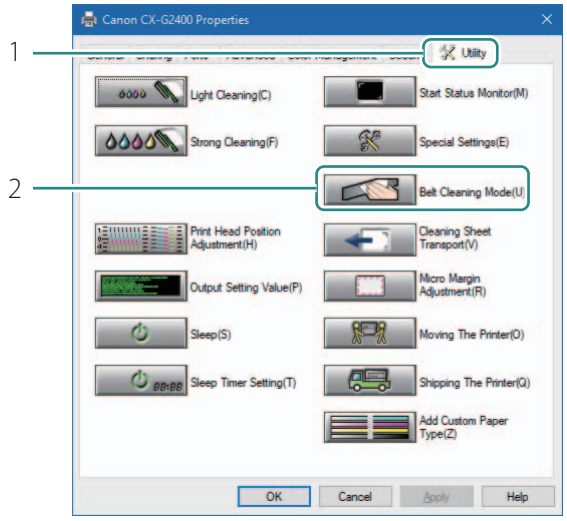

1. Click the [Utility] tab.
2. Click [Belt Cleaning Mode].
   - A confirmation message will appear.

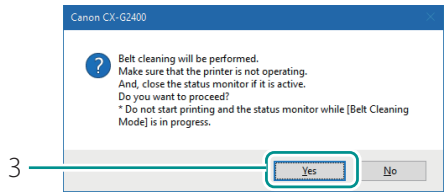

3. Click [Yes].

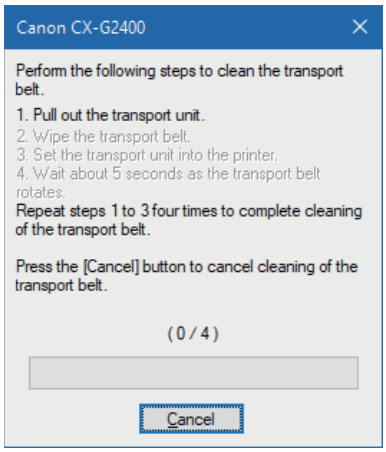

- A screen showing the cleaning procedure will appear.

3 Pull the transport unit out of the printer.

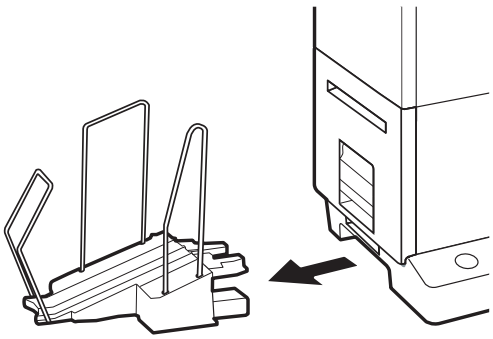

1. Remove the stacker if it is used.

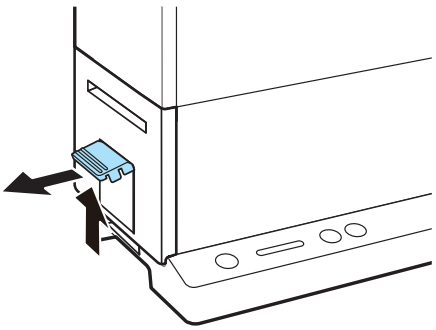

2. Raise the transport unit lever, and pull the transport unit out.

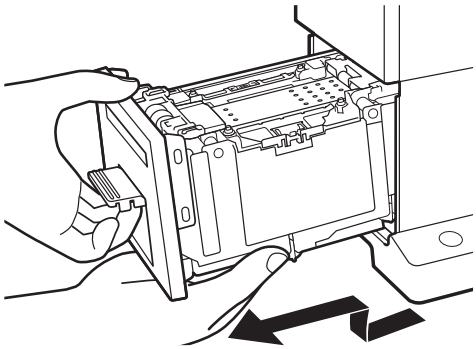

3. Pull the transport unit out with both hands as shown in the figure.

CAUTION

- When pulling the transport unit out of the printer, hold it securely with both hands so that it does not fall down.
- Do not put your hands inside the printer. Failure or physical injury could result. Ink adhered inside of the printer could stain clothes or hands.

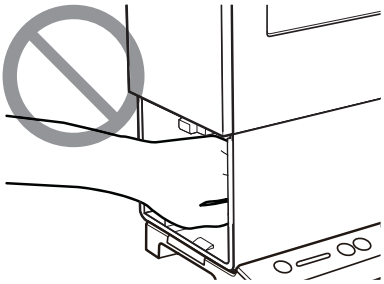

IMPORTANT

- When pulling the transport unit out of the printer or inserting it in the printer, be careful not to hit it strongly against the table or shelf. The surface of the table or shelf could be damaged.

4 Wipe the transport belt and paper retainer with a dry, lint free cloth.

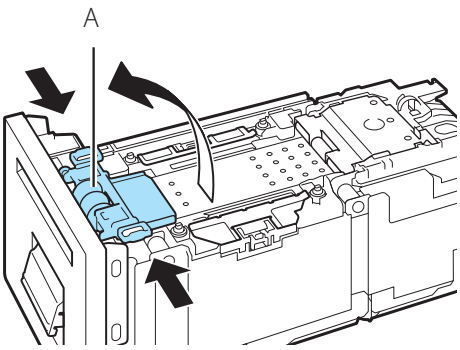

1. Open the paper retainer (A).

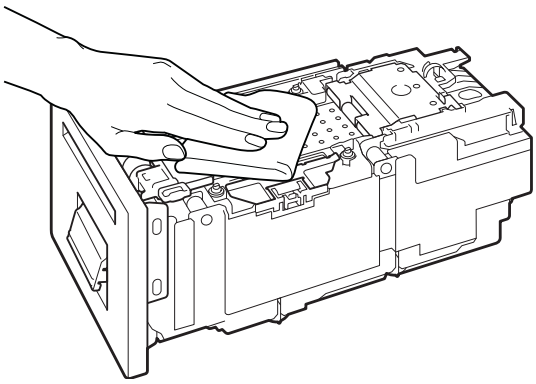

2. Wipe the stain and paper dust off of the transport belt.

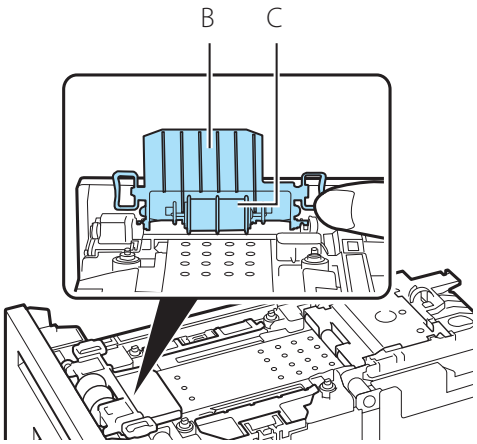

3. Wipe the ink stain and paper dust off of the back side of the paper retainer (B) and roller (C).

- Clean the roller while rotating it.

4. Close the paper retainer.

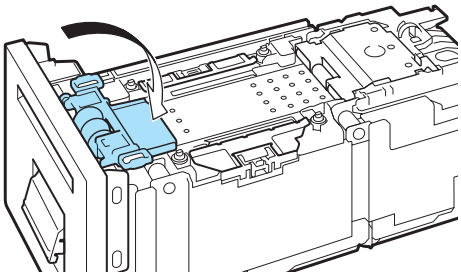

IMPORTANT

- Do not use a paper towel or tissue. If a torn piece or dust of the paper towel or tissue enters inside of the printer, a printer failure could result.
- When cleaning, be careful not to damage the transport path film (F).

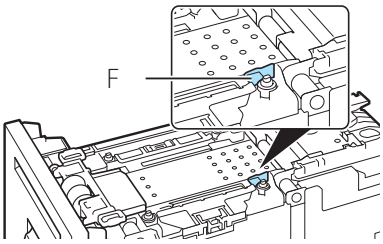

5 Set the transport unit in the printer.

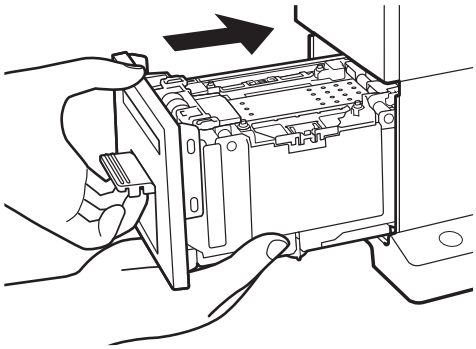

1. Slowly insert the transport unit as far as it will go.

- As you do this, be careful not to touch the paper guides doing so will change their positions.

CAUTION

- When inserting the transport unit, be careful not to get your fingers caught between the transport unit and the main body of the printer.

2. Push the transport unit lever until it clicks.

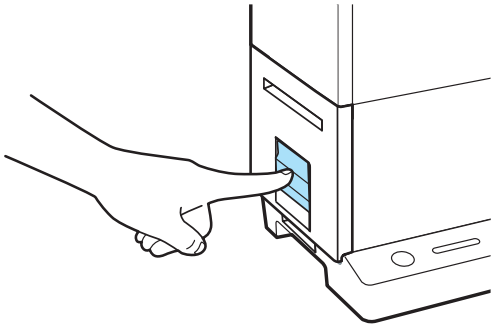

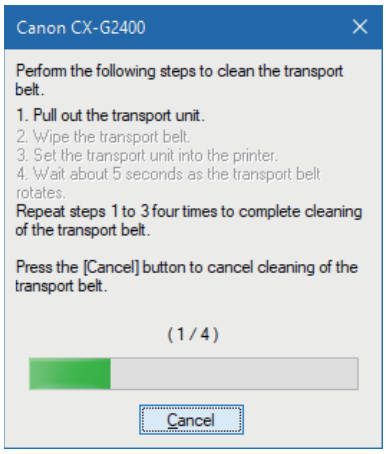

- When the transport belt rotates, the progress bar moves. Check that the progress bar has moved, and then begin the next cleaning step.
- The figure on the left shows that the first cleaning step has been completed.

6 Repeat steps 3 to 5 four times.

After repeating four times, a completion message will appear.

7 Complete the belt cleaning procedure.

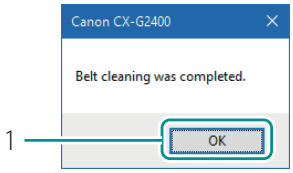

1. Click [OK].

8 When using the stacker, install it back to the correct position.

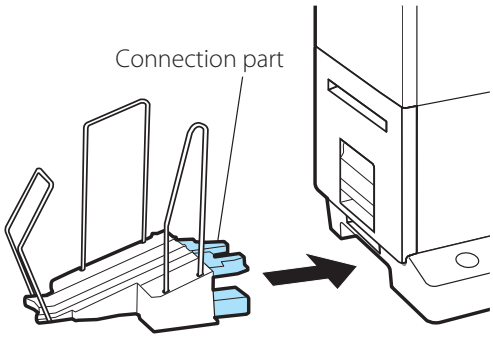

- Insert the connection part of the stacker straight into the slot of the printer.

Cleaning the Pick-up Roller

If printed paper is stained or paper cannot be fed properly, the pick-up roller may be stained. Clean the pick-up roller periodically.

IMPORTANT

- While the Power lamp is lit or blinking, do not remove the power plug from the outlet. A printer failure could result.

1 Lower the feeder lift tray.

If the feeder lift tray is already lowered, proceed to step **2**.

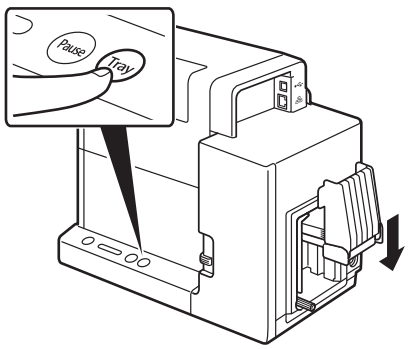

1. Press the Tray key.

- Wait for the feeder lift tray to stop.

2 Remove the paper from the printer.

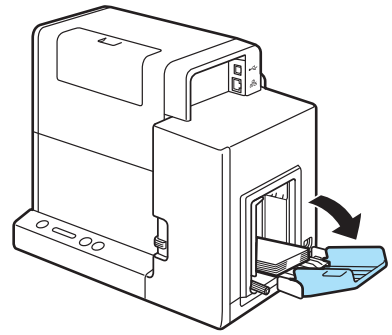

1. Open the auxiliary tray.

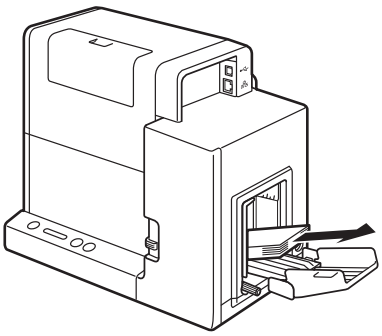

2. Remove the paper.

3 Turn off the printer. (P.8)

IMPORTANT

- While the Power lamp is lit or blinking, do not remove the power plug from the outlet. A printer failure could result.

4 Disconnect the power cord and interface cable.

5 Wipe the pick-up rollers clean with a damp cotton swab etc.

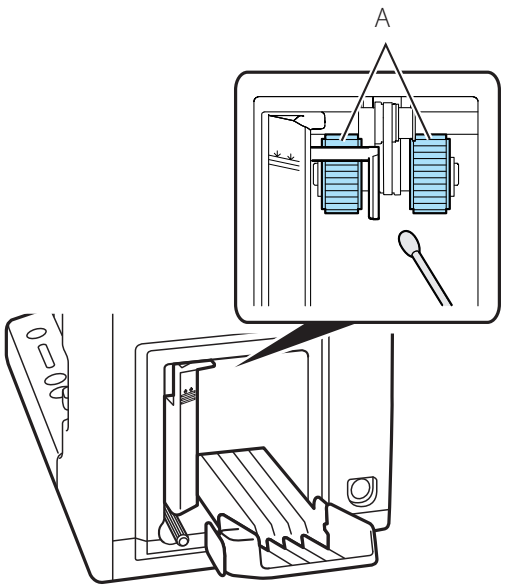

- Carefully wipe the stain off the pick-up rollers (A).

IMPORTANT

- When cleaning, be sure not to get the cotton swab or your finger caught in the sensor lever (B).

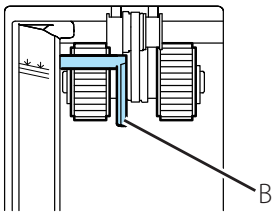

6 Connect the power cord and interface cable.

Chapter 4

Troubleshooting

For Troubleshooting Operations 148
List of Error Messages/Warning Messages 165

For Troubleshooting Operations

If problems persist after trying these procedures, contact your place of purchase.

Status Lamp Lights up Orange

When an error occurs in the printer that requires attention, the Status Lamp on the Operation Panel will light up orange (operator call error).

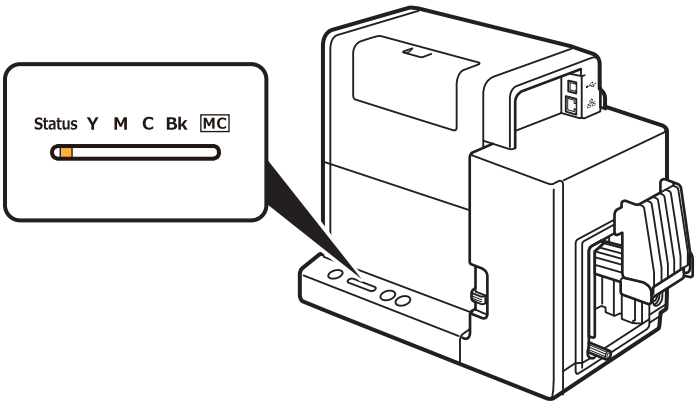

The error details and actions required can be confirmed with the Status Monitor.
After selecting the message in [Status Information], click [Display the details of the selected status] (Alternatively, double-click the message of the [Status Information]).

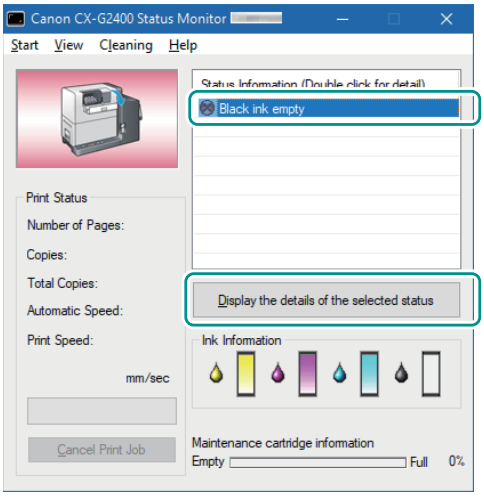

IMPORTANT

- For information on the details of the messages displayed on the Status Monitor and how to deal with errors, refer to "List of Error Messages/Warning Messages (P.165)".
- When error messages are displayed, the printer will automatically go offline.
  Depending on the type of error, even after handling the error, there are cases where it will not go online automatically. In this case, press the pause key and bring it online.
- If multiple errors occur simultaneously, the errors will be shown in order from the importance. Handle all of the errors.

Status Lamp Is Flashing Orange

When an error occurs in the printer and normal operation is not possible, the Status Lamp of the Operation Panel will flash orange (service call error).

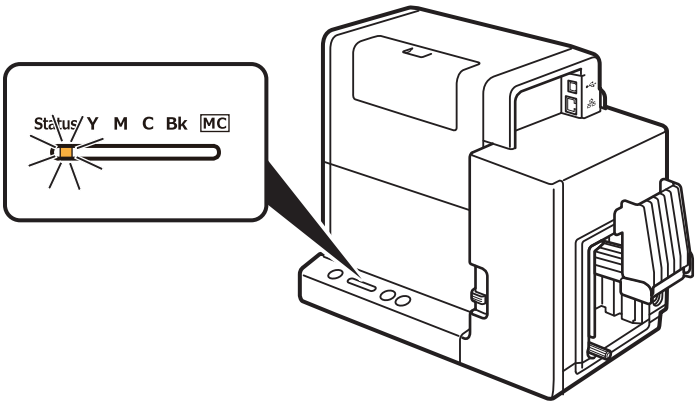

Handle accordingly:

1 Turn the printer off. (P.8)

2 After the Power Lamp goes off, turn the power on again. (P.7)

3 If an error occurs after turning on the printer again, contact your place of purchase and provide them with the error number (4 digits) displayed on the Status Monitor.

Power Does not Turn on

Points to Confirm	Solution
Is the AC adapter and power cord properly connected?	After confirming that the AC adapter and power cord are properly connected, insert the power plug firmly into the power outlet.
Is the power outlet supplying electricity?	Try plugging in other electric appliances. If it works properly, a printer failure is possible. Contact your place of purchase.

Printing Does not Start/Complete

Points to Confirm	Solution
Did an error occur?	Double-click the message of the [Status Information] displayed on the Status Monitor and operate according to the directions given.
Is it connected to the computer?	Connect the computer and the printer correctly with the interface cable.
Is the correct printer selected?	Select the printer to be used with the [Printing] dialog box.
Are you printing a large image?	If the Status Lamp (green) is flashing, the data is still being processed, stand by.
Are you printing for long periods of time?	When printing for a long period of time, the print head temperature will rise. To protect the head, printing operations will be interrupted. After a while printing will resume.
Did the test pattern print?	From [Utility] window of the printer driver, try performing the print out of a head position adjustment pattern or print the configured values. If printed, confirm the configuration and operation procedures of the application software and confirm the contents of the data to be printed.
Are there problems occurring with the computer?	Print after restarting the computer. Also, delete any print jobs left over when starting.

Points to Confirm	Solution
Is the computer's configuration for suspend or sleep state set to something other than “Never”?	Selecting "Never" in the Microsoft Windows Power Saver or Power Option settings will prevent the computer from entering a sleep state. Refer to Microsoft Windows product documentation for instructions on adjusting your computer's power settings. (P.24)
Is “no ink” displayed even though an ink tank with remaining ink is installed?	Reinstall the ink tank. (P.95)
Are the port settings correct?	Follow the steps below to confirm the port settings: 1. Select as described below: - **For Windows 10** Right-click on start and then select Control Panel -> Hardware and Sound -> Devices and printers. **- For Windows 8.1** From the Desktop charms, select Settings -> Control Panel -> Hardware and Sound -> Devices and Printers. **- For Windows 7** Select the Start menu -> Devices and Printers. 2. Right-click the printer icon and select [Printer Properties]. The properties window will appear. 3. Click on the [Ports] tab and confirm that the port is correctly selected. e.g.) For USB connection : USBnnn (“nnn” represents numbers) For network connection : CFTnnnnnn@MDL ("n" represents the last six digits of the printer's Mac address, and MDL is the printer's model name.) If the setting is incorrect, set it correctly. If the port to be used is not available, uninstall the printer driver and install the printer driver again. 4. Click [OK].

Points to Confirm	Solution
(When you are connected within a network environment) Are the printer and computer configured on the same network?	Make sure that the computer and this printer are installed on the same network following the steps below: **(Confirming the IP address)** 1. Confirm this printer's IP address. Open the network settings. When the network settings open, the printer used will be detected and the configured IP address will be displayed. 2. Confirm the computer's IP address. 1) Enter "cmd" in the "Search the WEB and Windows" of the Desktop. From the Desktop charm, select [Search] and enter "cmd". **- For Windows 8.1** From the Desktop charms, select Settings and enter "cmd". **- For Windows 7** Enter "cmd" in the "Search programs and files" of the [Start] menu. 2) In the window started, enter "ipconfig/all". 3) After confirming the IP address, close the screen. Once you have confirmed the IP addresses, if the printer and computer are not on the same network, change the printer's IP address according to the following steps and add a new port. **(Changing the printer's IP address)** Open the network settings and change the printer's IP address. **(Adding a new port)** 1. Select as described below: - **For Windows 10** Right-click on start and then select Control Panel -> Hardware and Sound -> Devices and printers. **- For Windows 8.1** From the Desktop charms, select Settings -> Control Panel -> Hardware and Sound -> Devices and Printers. **- For Windows 7** Select the Start menu -> Devices and Printers.

<table>
<tr><td></td><td>2. Right-click the printer icon and select [Printer Properties].
The properties window will appear.
3. Click on the [Ports] tab and click [Add port].
4. Select [CNUS Network Port] and click [New Port...].
The [CNUS Network Port] dialog box will be displayed.
5. Click [Detect Printers].
This printer will appear in [List of Printers].
If this printer is not displayed, click [Limit detect area] and search for the IP address.
6. Enter the new port name in the [Output].
7. Click [OK].</td></tr>
<tr><td>(When you are connected within a network environment)
Is communication with the printer enabled?</td><td>The port number and protocol that the printer uses for communication are set as follows. Use these settings as references.<table><tr><th>Port number</th><th>Protocol</th></tr><tr><td>50000</td><td>TCP</td></tr><tr><td>50001</td><td>TCP/UDP</td></tr><tr><td>50002</td><td>UDP</td></tr></table></td></tr>
</table>

Paper Does not Feed Properly

Points to Confirm	Solution
Is the dedicated paper being used?	Use dedicated paper. Do not use paper other than dedicated paper. It can cause paper jams and malfunctions.
Is the paper switch lever set properly?	Check that the paper switch lever is set to the appropriate position according to the paper to be printed on. (P.13)
Is the paper leading edge folded or is the paper curled?	If the paper leading edge is folded or the paper is curled, the paper will not feed properly. Also, it can cause paper jams and malfunctions.
	Flatten the paper. If the paper cannot be flattened, adjust the paper guides to the paper width, and then print. (P.50)

Points to Confirm	Solution
Are the paper guides set properly?	Check that the paper guides are set to the MM position. (P.21)
	If the paper guides are adjusted to the paper width, check that the guides are set properly. If the paper guides are set narrower than the width of the set paper, paper jams could result. (P.50)
Is the transport unit or pick-up roller stained?	If the transport unit or pick-up roller is stained with paper dust or ink, paper jams are more likely to occur. Clean them regularly. (P.143)
Has the maximum number of sheets that can be set been exceeded?	Check the maximum number of sheets. (P.18)

Improving the Print Quality

Condition	Solution
Streaks appear on the print.	Confirm that the paper set (size, shape, and type) matches the paper (size, shape, and type) configured by the application software or printer driver.
	Set the resolution to [Input resolution 1200dpi] (prioritize image quality) and then print. (P.55)
	If you are using the printer at low temperature (Room temperature is 14 degrees Celsius (57 degrees Fahrenheit) or lower) : Open the [Utility] tab in the printer driver and then select the [Low Temperature Print Mode] in the [Special Settings]. (P.83)
Areas aren't being printed on completely.	Confirm that the paper set (size, shape, and type) matches the paper (size, shape, and type) configured by the application software or printer driver.
	Clean the print head. (P.109)

Condition	Solution
The printing is blurred.	Confirm that the paper set (size, shape, and type) matches the paper (size, shape, and type) configured by the application software or printer driver.
	Clean the print head. (P.109)
	If you are using the printer at low temperature (Room temperature is 14 degrees Celsius (57 degrees Fahrenheit) or lower) : Open the [Utility] tab in the printer driver and then select the [Low Temperature Print Mode] in the [Special Settings]. (P.83)
The color deviation appears on the print.	Confirm that the paper set (size, shape, and type) that displays color deviation matches the paper (size, shape, and type) configured by the application software or printer driver is the same.
	Adjust the position of the print head. (P.113)
	Set the resolution to [Input resolution 1200dpi] (prioritize image quality) and then print. (P.55)
	If you have several printers, check that you have not changed the printer and transport unit combinations. Because accurate adjustments are made between each printer and its transport unit, it is not possible to use a transport unit of another printer.
The halftone representation is coarse.	Open [Color] tab of the printer driver, and set the [Half-tone] to [Error Diffusion]. (P.55)
The area around characters or the layer areas appear uneven.	Open the printer driver's [Color] tab and set the [Half-tone] to [Error Diffusion]. (P.55)
	Confirm that the paper set (size, shape, and type) matches the paper (size, shape, and type) configured by the application software or printer driver.
During micro margin printing, the print position and margins are off alignment.	Adjust the print position and trimming position for micro margin printing. (P.47)
	If you have several printers, check that you have not changed the printer and transport unit combinations. Because accurate adjustments are made between each printer and its transport unit, it is not possible to use a transport unit of another printer.

Condition	Solution
Overall appearance of the print is poor.	Use dedicated paper. When paper other than dedicated paper is used the print quality may be low. Also, it may cause paper jams and malfunctions.
	Verify that the paper set (size, shape, and type) matches the paper (size, shape, and type) configured by the application software or printer driver.
	Set the resolution to [Input resolution 1200dpi] (prioritize image quality) and then print. (P.55)
Printed paper is wavy and rubbing marks are left on the paper.	Verify that the paper set (size, shape, and type) matches the paper (size, shape, and type) configured by the application software or printer driver.
	Flatten the paper so that the curl. If the paper cannot be flattened, adjust the paper guides to the paper width, and then print. (P.50)
The color printed differs from the color on screen.	Open [Color] tab of the printer driver, and adjust the settings for image quality and color. (P.55)
	Verify that the [Display] and [Screen Properties] are correctly configured in the control panel of the computer used. Especially if the type of display or gamma factor is wrongly configured, the proper color will not be displayed.
The colors are wrong or colors mixed.	Any ink tank may be installed incorrectly. If any ink tank is installed incorrectly, ink colors may be mixed. In this case, execute [Shipping The Printer] from the printer driver so that remove ink from the print head. (P.179)

Condition	Solution
The back of the printer gets stained.	Printing on paper that is the wrong size could stain the transport belt, paper guides, or other areas. Confirm that the size of the set paper and the [Paper Size] configured by the application software or printer driver are the same. If the transport belt, paper guides, or other areas are stained, clean the transport unit. (P.130)
	Open [Utility] tab of the printer driver and print after setting [Reduce smudge on media edge] from [Special Settings]. (P.83)
	The paper may be curled. Flatten the paper. If the paper cannot be flattened, adjust the paper guides to the paper width, and then print. (P.50)
	The sheets may be stacked before the printed surface is dry. Open [Utility] tab of the printer driver, and enable [Print&Hold Mode] in [Special Settings]. This will stop the paper at the ejection slot one sheet at a time. (P.83)
The margin of the final print is too small or large.	Configure the paper size set by the application software or printer driver as follows: When the margin is small or when images on the edge of the paper are missing: Decrease the [Paper Length] and adjust the image according to the paper size changed. Also, if images on the edge of the paper are missing, verify that the transport area is clean before printing. If stained, clean the transport unit. (P.130) When the margin is large: Increase the [Paper Length] and adjust the image according to the paper size changed.

Paper Is Jammed

When a paper jam occurs during printing, the printing is interrupted and the Status Monitor will display an error message such as "Paper jam #****" (where **** is a number).
Follow the steps below to remove the paper jam.

IMPORTANT

- Use the dedicated paper. When paper that is not compatible is used, blurring or bleeding may occur and it may adversely affect the printer, causing a malfunction.
- If the paper leading edge is folded or the paper is curled, paper jams may occur.

1 Check the transport unit.

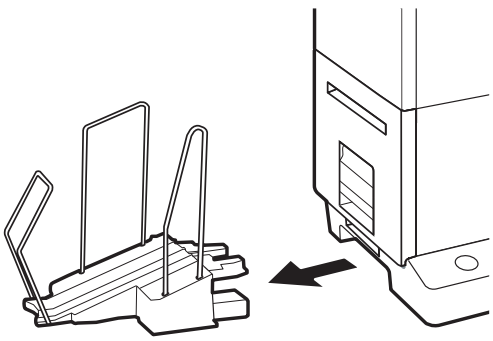

1. Remove the stacker if it is used.

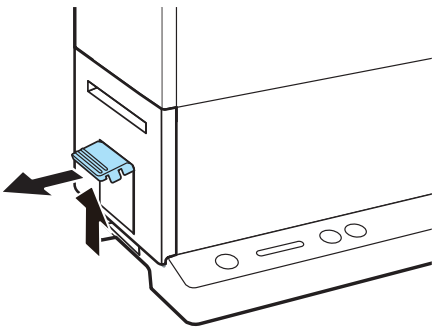

2. Raise the transport unit lever, and pull the transport unit out.

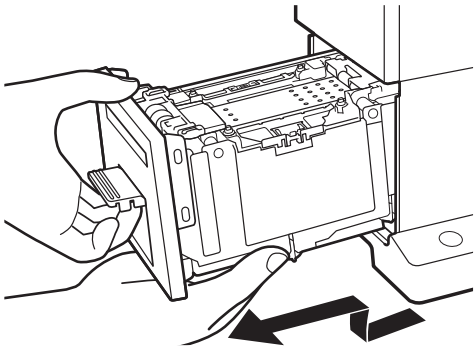

3. Pull the transport unit out with both hands as shown in the figure.

CAUTION

- When pulling the transport unit out of the printer, hold it firmly with both hands so it does not fall.
- Do not put your hands inside the printer. Failure or physical injury could result. Ink adhered inside of the printer could stain clothes or hands.

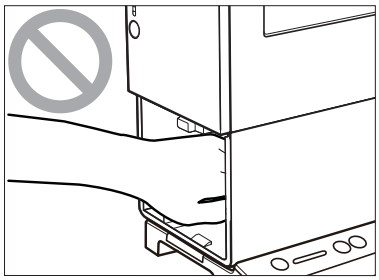

IMPORTANT

- When pulling the transport unit out of the printer or inserting it in the printer, be careful not to hit it strongly against the table or shelf. The surface of the table or shelf could be damaged.

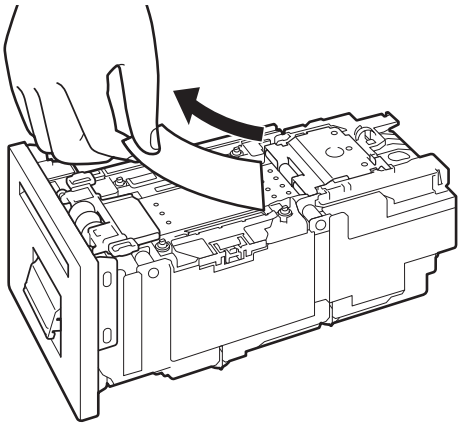

4. Remove the jammed paper from the transport unit

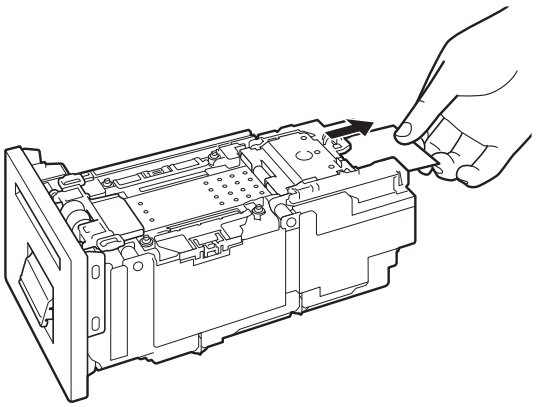

- Check that the paper is not jammed further in the transport unit. If paper is jammed, remove it.

2 Check the feeder slot.

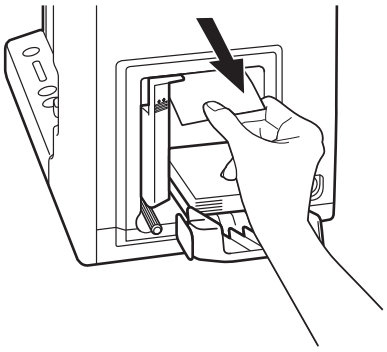

- If paper is jammed, remove it.

IMPORTANT

- When removing the jammed paper, be sure not to get the cotton swab or your finger caught in the sensor lever (A).

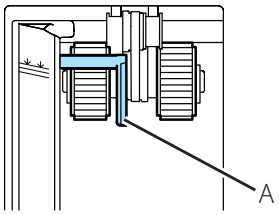

3 Set the transport unit in the printer.

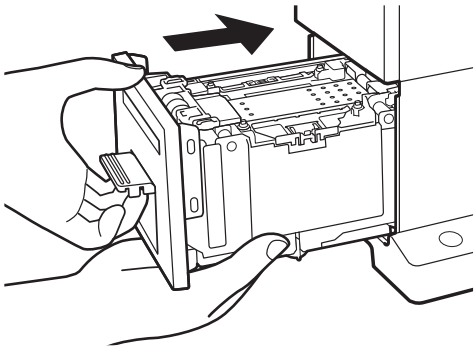

1. Slowly insert the transport unit as far as it will go.

- As you do this, be careful not to touch the paper guides doing so will change their positions.

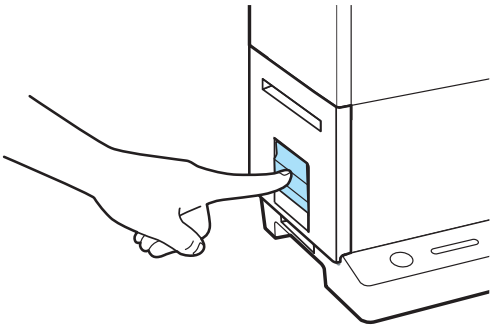

2. Push the transport unit lever until it clicks.

- To cancel the printing, click on [Cancel Print Job] on the Status Monitor.

CAUTION

- When returning the transport unit back inside the printer, be careful not to get your fingers caught between the transport unit and the inside of the printer.

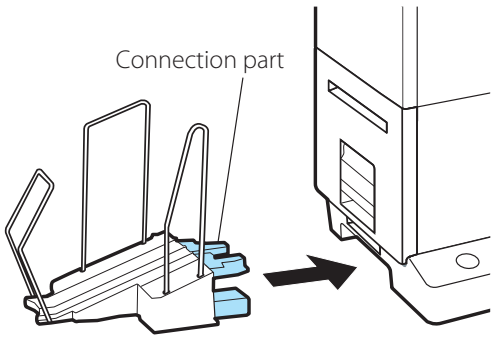

3. When using the stacker, install it back to the correct position.

- Insert the connection part of the stacker straight into the slot of the printer.

IMPORTANT

- **Adjust the paper guides to the paper width**
  Adjust the paper guides to the paper width. However, when the paper guides are adjusted to the paper width, micro margin printing is not possible.

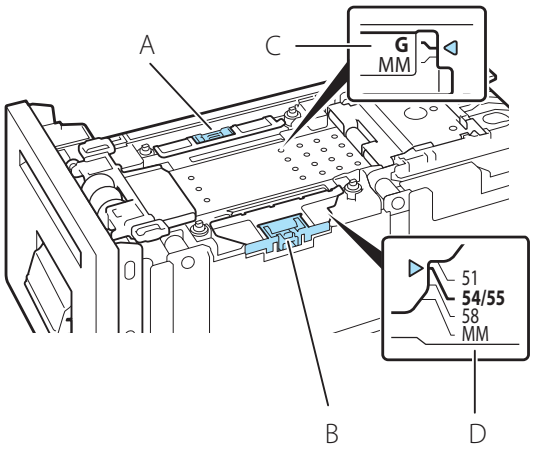

1. While holding the paper guide (A) with your fingers, adjust it to G of the index (C).

- When setting paper guide (B) to a position other than MM, adjust paper guide (A) to G of the index (C).

2. While holding the paper guide (B) with your fingers, adjust it to the paper width index (D). For example, the figure on the left shows adjustment to guide position 54.0 mm/55.0 mm.

- When the paper guides are adjusted to the paper width, be careful of the following points.
  - When the paper guides are adjusted to the paper width, micro margin printing is not possible.
  - When performing micro margin printing, be sure to set the paper guides to the MM position. Otherwise, the

transport belt, paper guides, or other areas may be stained with ink. If stain occurs, clean the transport unit. (P.130)

- When you change the size of the set paper, reset the paper guides. If the paper guides are set narrower than the paper width, paper jams could result.

- For dedicated paper, set the paper guide to the position shown in "Table 1: Guide positions of paper."

Table 1: Guide positions of paper

Paper name	Guide position (mm)
Business Card 55.0 x 91.0 mm (2.17 inch - 3.58 inch)	54/55
Card CR80 Plastic 54.0 x 85.6 mm (2.13 inch - 3.37 inch)	54/55
Card CR80 Paper 54.0 x 85.6 mm (2.13 inch - 3.37 inch	54/55
Business Card US 51.0 x 89.0 mm (2.01 inch - 3.50 inch)	51

The paper guides cannot be used for paper whose width is not 51 mm (2.01 inch), 54 mm (2.13 inch), 55 mm (2.17 inch), or 58 mm (2.28 inch). For paper that cannot use the paper guides, fix the curl. (P.15)

List of Error Messages/Warning Messages

When trouble occurs while operating the printer or printing, the Status Monitor will activate and display error messages and warning messages. If problems persist after trying these procedures, please contact your place of purchase.

IMPORTANT

- When error messages are displayed the printer will automatically go offline. Depending on the type of error, even after handling the error, there are cases where it will not go online automatically. In this case, press the pause key and return the printer to online state.
- If multiple errors occur simultaneously, the errors will be shown in order from the importance.
- If the Status Monitor is minimized or is in the task tray, Status Monitor window will be displayed when an error occurs.
- After selecting the message displayed, if [Display the details of the Status] is clicked (or the message of the [Status Information] is double-clicked), a separate screen will appear to confirm the message details along with steps to handle the error.

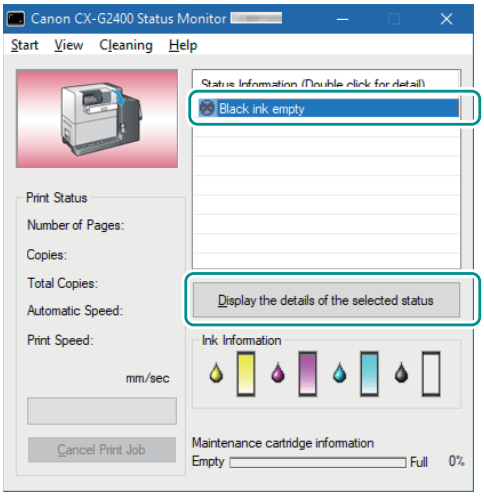

Error Message

Operator Call Error

If problems persist after trying these procedures, please contact your place of purchase. (#**** represents numbers)

Error Message	Error Content	Handling
Transport unit flup open	The transport unit lever is open.	Close the transport unit lever.
Ink tank cover open	The ink tank cover is open.	Close the ink tank cover.
XXXX ink empty ("XXXX" is black, cyan, magenta, or yellow)	There is no ink available for printing.	Replace with new ink tank. (P.95)
XXXX ink tank setting error ("XXXX" is black, cyan, magenta, or yellow)	The ink tank is not inserted properly.	Set the ink tank again. (P.95)
XXXX ink tank abnormality #** ("XXXX" is black, cyan, magenta, or yellow)	The ink tank is not recognized. Either the ink tank is abnormal or an unsupported ink tank is installed.	Replace with new ink tank. (P.95)
Maintenance cartridge full #**	The maintenance cartridge's ink is full.	Replace with new maintenance cartridge. (P.102)
Maintenance cartridge setting error	The maintenance cartridge is not inserted properly.	Set the maintenance cartridge again. (P.102)
Maintenance cartridge abnormality	The maintenance cartridge is not recognized.	Replace with new maintenance cartridge. (P.102)

Error Message	Error Content	Handling
Paper jam #****	Paper is jammed.	Remove the paper jam and set the paper again. (P.159)
		If out of paper, resupply with new paper. (P.13) To cancel printing, click on [Cancel Print Job] in the Status Monitor.
		If the same error occurs, confirm the following: - Confirm that the paper switch lever is set to the appropriate position for the paper. (P.13) - Confirm that the paper set (size and shape) matches the paper (size and shape) configured by the application software or printer driver. - There is a possibility that the transport unit's sensor is dirty. Clean the transport unit. (P.130) - Confirm the printer driver's version and the firmware's version. If the printer driver and the firmware used are not the latest version, download the latest version from the website and update.
Paper empty #****	Out of paper.	Set new paper. (P.13) To cancel printing, click on [Cancel Print Job] in the Status Monitor.
		Confirm the paper so that the further edge touches the back of the feeder lift tray.

Error Message	Error Content	Handling
Paper length different #****	The length of the paper that is set differs from the paper size configured by the application software or printer driver.	If the paper is different, replace with the proper paper.
		If the application software or printer driver's configuration is different, click on the Status Monitor's [Cancel Print Job] and print again after correctly configuring the paper size.
Feeder tray overloaded #6201	The amount of paper loaded in the feeder lift tray is over the limit.	Load paper so that the number of sheets is less than the specified amount and the top surface of the paper stack is lower than the paper loading limit mark. After this, press the tray key.
		If there is paper in the feeder slot, remove it.
Paper left on the feeder slot #6202	Paper is jammed in the feeder slot.	Remove the paper jam from the feeder slot.
Feeder tray error	The feeder lift tray does not lower.	Confirm that is no foreign matter under the paper lift tray.
Paper switch lever check#****	The paper switch lever needs to be checked a set position.	Confirm that the paper switch lever is set to the appropriate position for the paper. (P.13) After setting the paper switch lever correctly, press the Pause key to resume printing. To cancel printing, click on [Cancel Print Job] in the Status Monitor.
Update error #****	The firmware update failed.	Perform the update again.

Error Message	Error Content	Handling
Data mismatch #****	Abnormal data was received from the computer.	Confirm the cable connection and print again.
		Confirm the printer driver's version and the firmware's version. If the printer driver and the firmware used are not the latest version, download the latest version from the website and update.
Memory full	Insufficient memory due to the overlay printing's form data being large.	Click on [Cancel Print Job] in the Status Monitor, and cancel printing and recreate the form data.
Overlay data error	Error with overlay printing data.	Confirm the cable connection and retry printing.
Print head position error #****	Problem with either the transport unit or print head.	Remove the transport unit and confirm that no foreign matter is on the insides.
		Open the ink tank cover and confirm there is no foreign matter around the print head.
Transport unit error #****	There are problems with transport unit internals.	Remove the transport unit and confirm that no foreign matter is on the inside.
Connected to a model other than Canon CX-G2400	It is connected to a printer other than this printer.	Connect with this printer.

Error Message	Error Content	Handling
Bidirectional communication error	Bidirectional communication cannot be established between computer and printer.	Confirm that the printer's power is on (online or sleep state).
		Restart the computer and printer.
		If the printer is connected to the computer with LAN connection, check the [Extend Time-Out value] check box from the network utility. (P.200)
		If the printer is shared, start Windows Task Manager, and confirm that "Canon XXXX Status Monitor Service" (where XXXX is the model name) is registered in the [Service] tab. If it is not registered, follow the steps below to register the service. 1. Start CD-ROM. 2. Click [Install the printer driver]. 3. Select [Server Client Registration], and then click [OK].
		Confirm the port settings. (P.152)
Unknown error #****	An unknown error was returned.	Update the printer drivers and firmware to the latest versions. If the same error occurs again, take note of the message displayed (#****) and contact your place of purchase.

Error Message	Error Content	Handling
XXXX ink level unknown ("XXXX" is black, cyan, magenta, or yellow)	The remaining ink level cannot be detected.	Replace with new ink tank. (P.95) Continuing to print with an emptied ink tank or with ink tanks not supported by this product may damage the printer. To continue printing, the ink level detection function must be disabled. Press the printer's pause key for more than 5 seconds. After this, the ink tank's ink level detection will be disabled and the disabling action will be logged.

IMPORTANT

- Printing with the ink level detection function disabled may damage the printer or cause errors. We cannot be held responsible for malfunctions as a result of refilling the ink or installing unsupported ink tanks.
- Once the ink level detection function is disabled, the ink level function cannot be restored for that ink tank. Replace with a new ink tank.

Service Call Error

Error Message	Error Content	Error Content
Service call error #****	An error that cannot be fixed by the customer occurred.	Turn the power off then on. If the same error occurs again, take note of the message displayed (#****) and contact your place of purchase.

Warning Message

Warning Message	Warning Content	Handling
XXXX ink low ("XXXX" is black, cyan, magenta, or yellow)	The remaining ink is low.	Prepare a new ink tank.
Maintenance cartridge level low	The maintenance cartridge is running out of space and is about to be full.	Prepare a new maintenance cartridge.
Stopping XXXX ink level detection ("XXXX" is black, cyan, magenta, or yellow)	The ink level detection function is disabled.	Set an ink tank that is compatible with this printer.
The print speed is not optimal	A fixed print speed is specified but the print speed is not optimal.	Open the [Advanced Settings] tab of the printer driver and check the option [Automatic Speed] for [Print Speed].
		Set the print speed to something slower than the current setting.
Temperature/humidity sensor not connected	The temperature/humidity sensor needs to be replaced.	Take note of the message displayed (#****) and contact your place of purchase.
The battery for the clock has ran out	The clock's (RTC) battery needs to be replaced.	Take note of the message displayed (#****) and contact your place of purchase.
Data transmission delayed	Data generation processing on the computer is not keeping up with the printing speed set by the printer driver.	Printing will resume as the processing progresses. Please wait a moment.
		If printing is being performed in 1st Print Priority mode, printing starts after ejecting a blank sheet

Warning Message	Warning Content	Handling
Unknown warning #*****	An unknown warning was returned.	Update the printer drivers and firmware to the latest versions. If the same error occurs again, take note of the message displayed (#****) and contact your place of purchase.

Chapter 5

Appendix

Moving the Printer....176
Uninstall Printer Driver....185
About Network Utility....187

Moving the Printer

- **When Moving the Printer Indoors:**
  Move the printer following the procedure described in "Moving the Printer Indoors (P.176)"
- **When transporting the printer over a long distance for relocation, maintenance, etc. or by use of an airplane, train, automobile, etc.:**
  Make preparations following the procedure described in "Shipping the Printer (P.179)"

Moving the Printer Indoors

CAUTION

- Prior to moving the printer, be sure to execute [Moving The Printer] from the printer driver. Moving the printer without taking necessary measures could cause ink leak inside the printer, resulting in a fire, electric shock, or machine failure.
- Detach the stacker before carrying the printer.
- When carrying the printer, be sure to securely hold the printer with both hands to avoid dropping the printer. In addition, do not hold the printer by the feeder lift tray or stacker, doing so may break the tray or stacker, and cause the printer to drop. This may lead to injury.

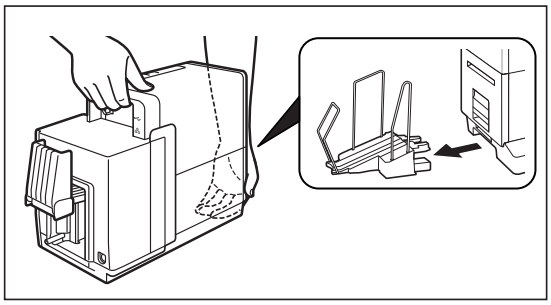

- Always hold the printer level and carry it slowly. If ink is spilled inside the printer while moving it, this could cause a fire or serious electrical shock or damage the printer.

IMPORTANT

- Administrative privileges over this printer are required to configure printer settings.
  If a user without administrative privileges proceeds with configuration of settings, a message "You do not have rights to printer management. Please contact your system administrator." appears.
  For more details, see "Administrative privileges required for certain features (P.40)".
- When printing is in progress or any error has occurred, [Moving The Printer] cannot be executed.
- [Moving The Printer] consumes ink. Execute it only when necessary.
- Do not move the printer with the ink tank cover open or with the transport unit drawn out. They could be

damaged or could result in a printer failure.

- For how to install the printer after movement, refer to the "Getting Started Guide."

1 Open the properties window of the printer. (P.32)

2 Execute [Moving The Printer].

Remove ink from the ink receiver so that ink does not leak during movement.

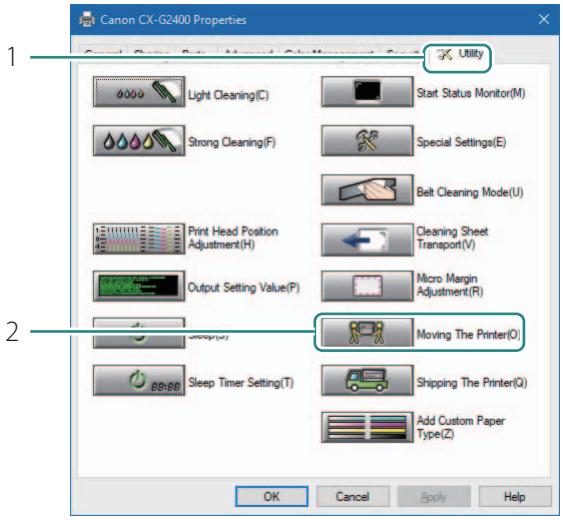

1. Click the [Utility] tab.
2. Click [Moving The Printer].

- A confirmation message will appear.

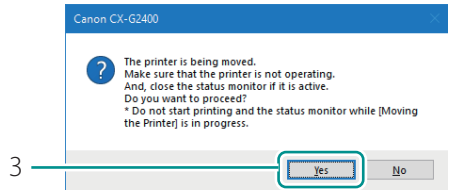

3. Click [Yes].

- Ink bleeding starts.
  Do not operate the printer until after the message indicating that the removal of ink is completed appears.

IMPORTANT

- During execution of [Moving The Printer], review the following precautions;
  - Do not turn off the printer.
  - Do not open/close the ink tank cover and transport unit lever.
  - Do not operate any other component of the printer.

NOTE

- If the message “Maintenance cartridge full” appears, replace the maintenance cartridge with a new one, and then click [Retry]. For how to replace the maintenance cartridge, see “Replacing the Maintenance Cartridge (P.102)”

3 Check that the execution of [Moving The Printer] has been completed.

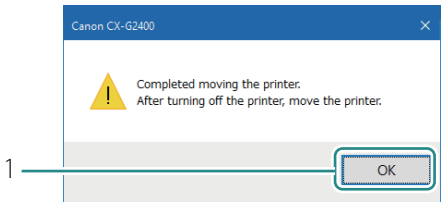

1. Click [OK].

4 Turn the printer off. (P.8)

IMPORTANT

- Do not remove the power plug from the outlet when the power lamp is lit or blinking. A printer failure could result.

5 Disconnect the power cord and interface cable.

6 Move the printer.

IMPORTANT

- Do not move the printer with the ink tank cover open or with the transport unit drawn out. They could be damaged or a printer failure could result.

7 After moving the printer to its destination, connect the power cord and interface cable.

8 Turn the printer on. (P.7)

Shipping the Printer

When transporting the printer over a long distance for relocation, maintenance, etc. or by use of an airplane, train, automobile, etc., be sure to make preparations following the procedure described below.

CAUTION

- Prior to shipping the printer, be sure to execute [Shipping The Printer] from the printer driver. Shipping the printer without taking necessary measures could cause an ink leak inside the printer, resulting in a fire, electric shock, or machine failure.
- Detach the stacker before carrying the printer.
- When carrying the printer, be sure to securely hold the printer with both hands to avoid dropping the printer. In addition, do not hold the printer by the feeder lift tray or stacker, doing so may break the tray or stacker, and cause the printer to drop. This may lead to injury.

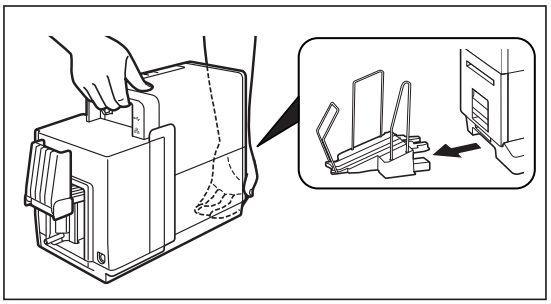

- Always hold the printer level and carry it slowly. If ink is spilled inside the printer while moving it, this could cause a fire or serious electrical shock or damage the printer.

IMPORTANT

- Administrative privileges over this printer are required to configure printer settings.
  If a user without administrative privileges proceeds with configuration of settings, a message "You do not have rights to printer management. Please contact your system administrator." appears.
  For more details, see "Administrative privileges required for certain features (P.40)"
- When printing is in progress or any error has occurred, [Shipping The Printer] cannot be executed.
- [Shipping The Printer] consumes ink. Execute it only when necessary.

- Do not move the printer with the ink tank cover open or with the transport unit drawn out. They could be damaged or a printer failure could result.
- For how to install the printer after movement, refer to the "Getting Started Guide."

1 Open the properties window of the printer. (P.32)

2 Execute [Shipping The Printer].

Remove ink from the ink flow passage so that ink does not leak during transportation.

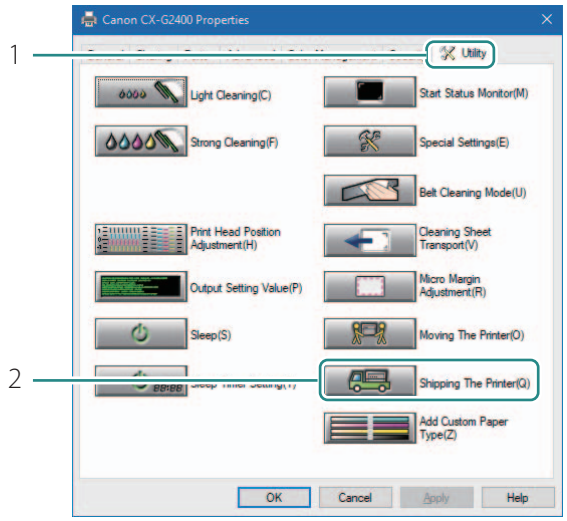

1. Click the [Utility] tab.
2. Click [Shipping The Printer].
   - A confirmation message will appear.

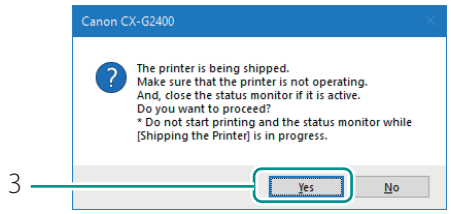

3. Click [Yes].
   - Execute [Shipping The Printer].
     Do not operate the printer before the specified message appears in step **3**.

IMPORTANT

- During execution of [Shipping The Printer], review the following precautions;
  - Do not turn the printer off.

- Do not open/close the ink tank cover and transport unit lever.
- Do not operate any other component of the printer.

NOTE

- If the message "Maintenance cartridge full" appears, replace the maintenance cartridge with a new one, and then click [Retry]. For how to replace the maintenance cartridge, see "Replacing the Maintenance Cartridge (P.102)"

3 When the following message appears, remove ink tanks.

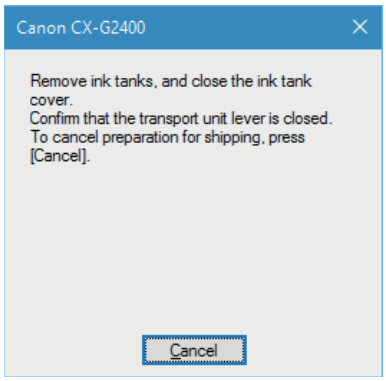

1. Open the ink tank cover.
2. Remove all ink tanks.
3. Close the ink tank cover.

- Closing the ink tank cover will start [Shipping the Printer] procedure.
  Do not operate the printer before the specified message appears in step **4**.

IMPORTANT

- During execution of [Shipping The Printer], observe the following precautions:
  - Do not turn the printer off.
  - Do not open/close the ink tank cover and transport unit lever.
  - Do not operate any other component of the printer.

4 When the following message appears, install the ink tank.

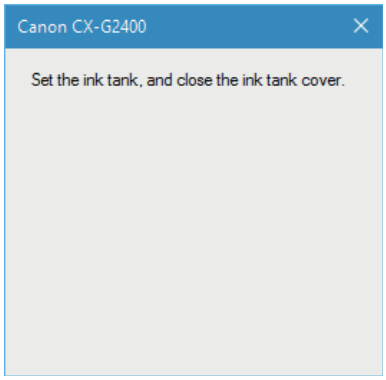

1. Open the ink tank cover.
2. Install all ink tanks.
   - Press on the top of the ink tank until the ink tank clicks.
   - Prior to installing each ink tank, verify the color matches up with the color indicated on the label.
3. Close the ink tank cover.
   - The printer will shut off automatically.

IMPORTANT

- Install each ink tank in the printer according to the color indicated on the label.
  If any ink tank is installed at a wrong position, the printer cannot print. In addition, ink colors could be mixed, resulting in poor print quality.
- If any one of the ink tanks is not installed, [Shipping The Printer] cannot be completed.

5 Check that [Shipping The Printer] is completed.

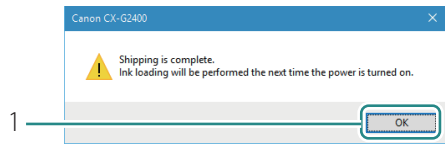

1. Click [OK].

IMPORTANT

- Do not press the Power key after the printer has turned off. Doing so will cause ink to refill in the printer.

6 Disconnect the power cord and interface cable.

7 Place the printer in the original plastic bag.

8 Place the printer in the original shipping box with the bottom down, and fill the vacant spaces with protectors.

IMPORTANT

- When transporting the printer, observe the following precautions:
  - To prevent the printer from being damaged or moving in the box during shipping, pack it using the original shipping box and protectors.
    If the original box, plastic bag, and protectors are not available, pack the printer in a secure box with protective materials.
  - After packing the printer, do not lift the box or place the box with its upper or side surface down. Ink could leak during transportation.
  - When transporting the printer, ask the carrier to affix "FRAGILE, HANDLE WITH CARE" and "THIS SIDE UP" labels with the bottom of the box down.

9 After installing the printer at the destination, connect the power cord and interface cable.

10 Turn the printer on. (P.7)

The printer will start ink filling automatically once it is turned on.

IMPORTANT

- When the Status lamp (green) is blinking, ink filling is in progress. Before the Status lamp (green) lights up, observe the following precautions:
  - Do not turn the printer off.
  - Do not open/close the ink tank cover and transport unit lever.
  - Do not operate any other component of the printer.

Uninstall Printer Driver

Prior to uninstalling, exit all running software applications and confirm that all print jobs are completed.

1 Remove all interface cables.

Ensure all printing is completed. Turn the printer off then remove all interface cables.

2 From Start menu, select All apps -> Canon CX-G2400 -> Canon CX-G2400 Printer Driver Uninstall.

- Windows 8.1

  1) Move the mouse pointer to the lower right corner (or upper right corner) of the window to show the Charms bar, and click [Start].
  2) On the Start screen, move the mouse pointer, and click the down arrow that appears at the bottom left of the screen.
  3) From All apps, Canon CX-G2400 -> Canon CX-G2400 Printer Driver Uninstall.

- Windows 7

  From Start menu, select All Programs -> Canon CX-G2400 -> Canon CX-G2400 Printer Driver Uninstall.

3 Begin Uninstallation.

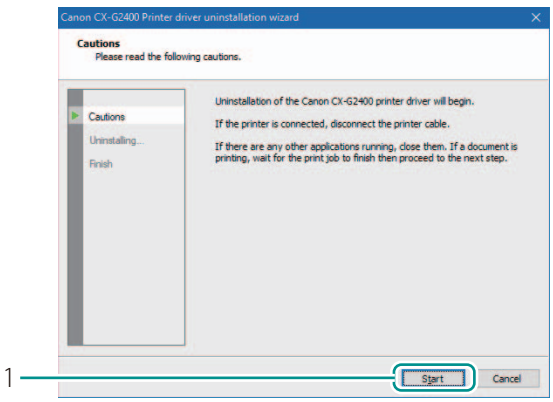

1. Click [Start].

- When the [User Account Control] dialog box appears, click [Yes].

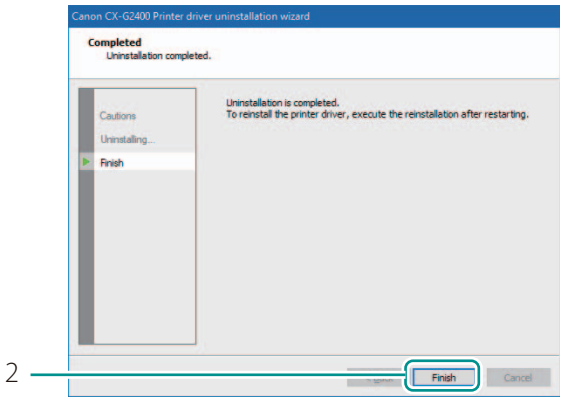

2. Click [Finish].

- The [Changing System Settings] dialog box will appear.

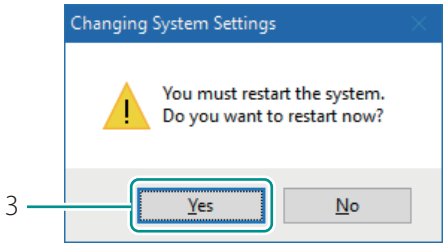

3. Click [Yes].

- Restart Windows.

NOTE

- If [No] is selected, always restart your computer before installing the printer driver again.
- If the network utility is installed, the screen below will appear. To continue uninstalling, follow the instructions on the screen.

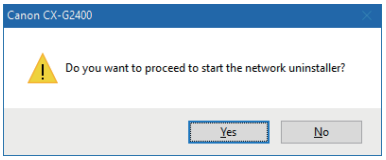

About Network Utility

The network utility is software that configures the printer's network environment. The network administrator needs to configure the network utility.

Starting the Network Utility

1 From Start menu, select All apps -> Canon CX-G2400 Network IF -> Utility.

- Windows 8.1

  1) Move the mouse pointer to the lower right corner (or upper right corner) of the window to show the Charms bar, and click [Start].
  2) On the Start screen, move the mouse pointer, and click the down arrow that appears at the bottom left of the screen.
  3) From All apps, Canon CX-G2400 Network IF -> Utility.

- Windows 7

  From Start menu, select All Programs -> Canon CX-G2400 Network IF -> Utility.

The network utility will be launched.
After searching for a printer the main screen will be displayed.

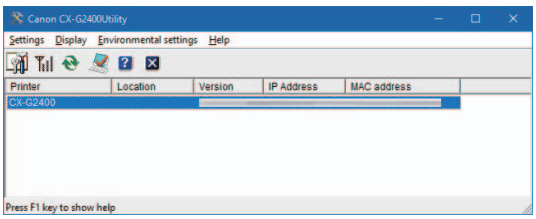

NOTE

- **Searching for the Printer**

  When the network utility is launched, it will automatically search for a printer, if the printer is not detected perform a search for the printer.

  From the main screen's [View] menu, click [Find Again] (or click on the toolbar).

- **Displaying Help**

  This will present an explanation of various network utility features and allow you to confirm configuration

methods.

From the main screen's [Help] menu, click [Help] (or click on the toolbar).

- **Displaying Version Information**

  From the main screen's [Help] menu, click [Version Information].

- **Exiting the network utility**

  From the main screen's [Settings] menu, click [Exit Utility] (or click on the toolbar).

Configuring the Network

IMPORTANT

- **Regarding the Network Configuration Password**

  Changing the printer's network configuration requires a password. The default password is "admin".
  To prevent those other than the network administrator from configuration, it is recommended to change the default password at the time of purchase (P.190)

■ Configure the Installation Site

Configure the installation site for this printer.

1 Select the printer to configure from the main screen.

2 From the [Settings] menu, click [Printer settings].

Or click on the toolbar.

3 Enter Password.

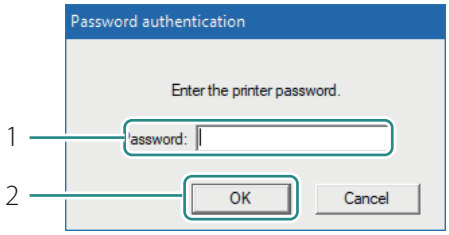

1. Enter the password.
2. Click [OK].

4 Configure the Installation Site.

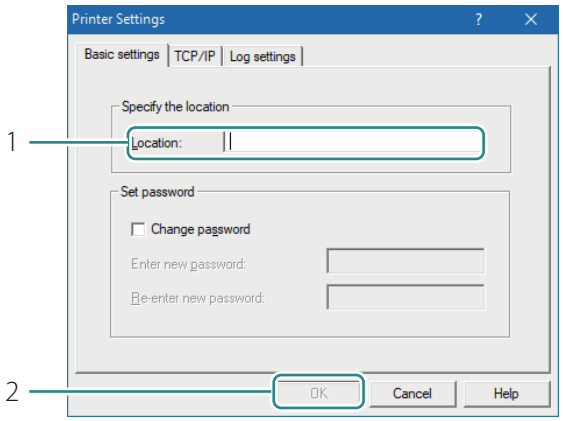

1. Enter the printer's installation site into [Location].

- When changing the configuration, limit it to 15 characters (single byte alphanumeric characters and some symbols. For details, refer to help.).

2. Click [OK].

■ Changing the Password

Change the password necessary for changing this printer's network settings.
It is recommended to change the default password at the time of purchase so that only the network administrator can change the settings.

1 Select the printer to configure from the main screen.

2 From the [Settings] menu, click [Printer settings].

Or click on the toolbar.

3 Enter Password.

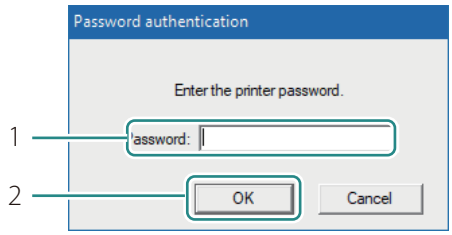

1. Enter the password.
   - The default password is "admin".
2. Click [OK].

4 Configure the new password.

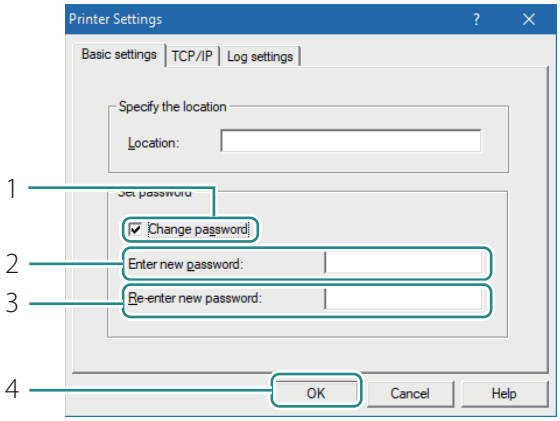

1. Check the option [Change password].
2. Enter a new password.
   - Enter a password that is up to eight characters (single byte alphanumeric characters).
3. To confirm, reenter the new password.
4. Click [OK].

Setting IP Address

1 Select the printer to set an IP address from the main screen.

2 From the [Settings] menu, click [Printer settings].

Or click on the toolbar.

3 Enter password.

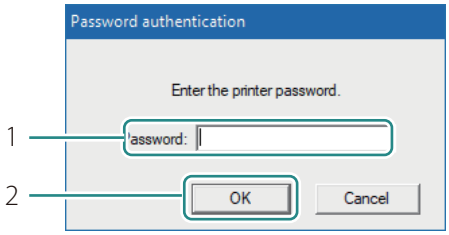

1. Enter the password.
2. Click [OK].

4 Set the IP address.

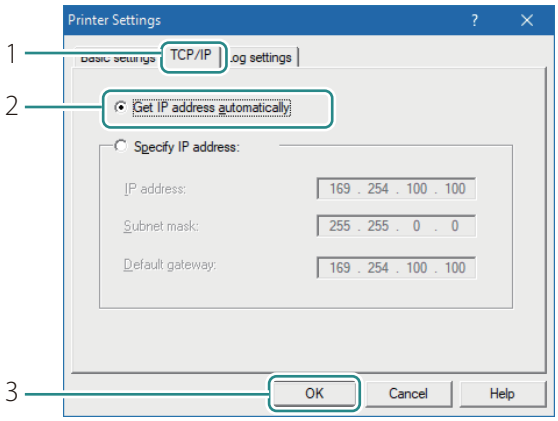

1. Click on the [TCP/IP] tab.
2. Select one of the followings.

   [Get IP address automatically]
   If there is a DHCP server on the network, the printer's IP address will be acquired automatically.

   [Specify IP Address]
   Manually set the printer's IP address. The IP address, subnet mask, and default gateway show the currently configured information. To change it, re-enter.

3. Click [OK].

Saving the Printer's Log File

If an issue occurs with the printer, please contact your place of purchase and they will use the printer log file as a point of reference to help troubleshoot. Steps on how to access and save your printers log file are described below.

1 Select the printer to configure from the main screen.

2 From the [Settings] menu, click on [Printer settings].

Or click on the toolbar.

3 Enter Password.

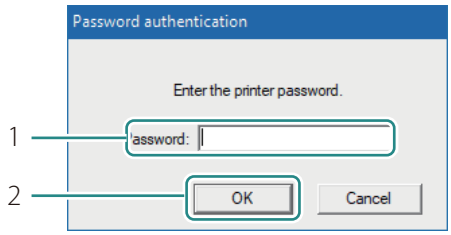

1. Enter the password.
2. Click [OK].

4 Configure the location for saving the log file.

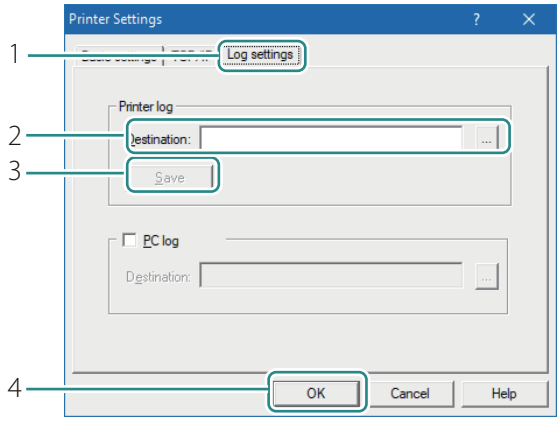

1. Click on the [Log Settings] tab.
2. Designate the destination to save.
3. Click [Save].
4. Click [OK].

■ Saving the Computer's Log File

Save the log file (*.log) of network communication between this printer and the computer.
Follow the steps below when instructed by dealer. Normally, this is unnecessary.

1 Select the printer to configure from the main screen.

2 From the [Settings] menu, click on [Printer settings].

Or click on the toolbar.

3 Enter Password.

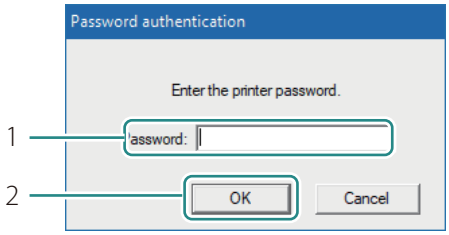

1. Enter the password.
2. Click [OK].

4 Configure the location for saving the log file.

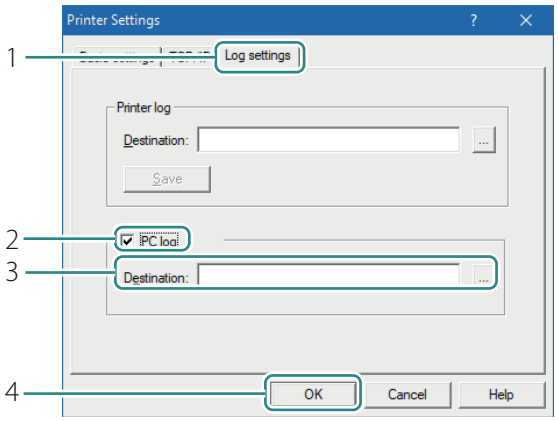

1. Click on the [Log Settings] tab.
2. Check the option [PC Log].
3. Designate the destination to save.
4. Click [OK].

■ Confirming Communication Status

Confirm this printer's network status.

1 Select the printer to configure from the main screen.

2 From the [Settings] menu, click [Printer LAN Status].

Or click on the toolbar.

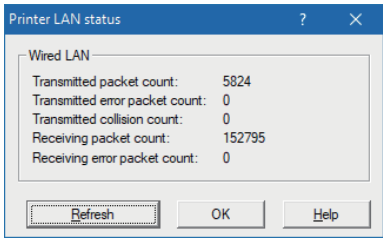

- The LAN's communication status will be displayed.
- To update to the latest information, click [Refresh].

3 Click [OK] after confirming.

■ Configuring Access Restrictions for the Printer

Configure so that only computers with the designated MAC address can connect to this printer.

1 Select the printer to configure from the main screen.

2 From the [Settings] menu, click [MAC address filter].

3 Enter Password.

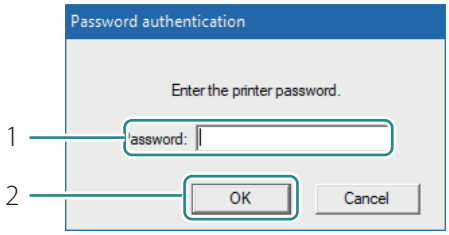

1. Enter the password.
2. Click [OK].

4 Configure the MAC address filter.

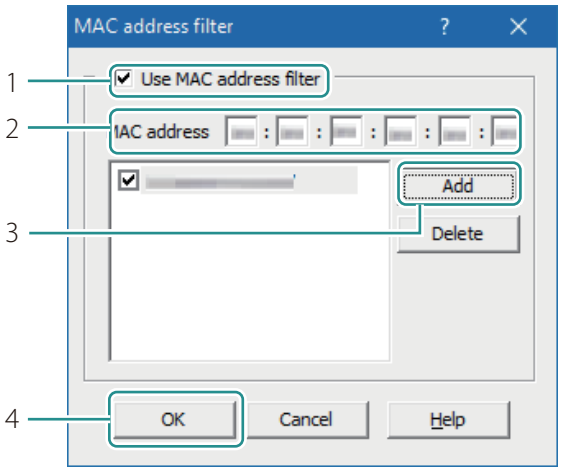

1. Select the option [Use MAC address filter].
2. Enter MAC address.
3. Click [Add].
   - The MAC address will be added. A maximum of 32 addresses can be configured.
   - To remove a MAC addresses that was added: Select a MAC address to delete from the list and click [Delete].
4. Click [OK].

IMPORTANT

- When the MAC address has been set incorrectly, the computer will not be able to connect to this printer. If you are unable to cancel the setting, contact the administrator of the printer.

Initializing the Printer's Network Settings

All the network settings of this printer will be initialized.

1 Select the printer to configure from the main screen.

2 From the [Setting] menu, click [Restore the factory default value].

3 Enter Password.

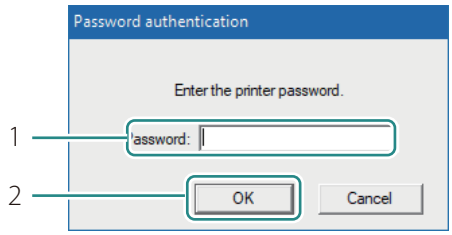

1. Enter the password.
2. Click [OK].

- A confirmation message will be displayed.

4 Click [OK].

IMPORTANT

- After executing [Restore Factory Default Settings], the password necessary for configuring the printer's network will also be initialized. The default password is "admin".

Configuring Network Using the Network Utility

The following explains how to configure the network using the network utility. How to set the printers search range and the network's time out value are described below.

■ Setting the Printers Search Range

When searching for this printer, the IP address to be searched for can be specified.

1 From the [Environmental settings] menu, click [Utility environmental settings].

Or click on the toolbar.

2 Specify the IP address to search for.

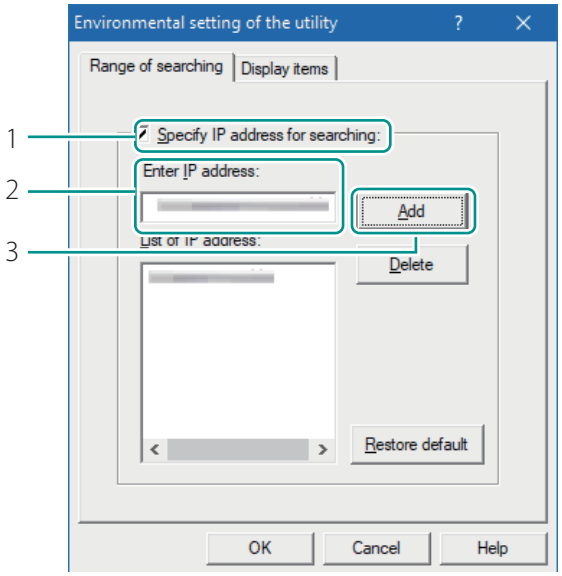

1. Check the option [Specify IP Address to Search].
2. Enter the IP address.
3. Click [Add].

- The IP address will be added. Up to 16 IP addresses can be specified.
- To remove an added IP addresses:
  Select from the list and click [Delete].
- Clicking [Restore default] will restore the content of the [Search Range] tab to its defaults.

3 Configure the items displayed when the printer is detected.

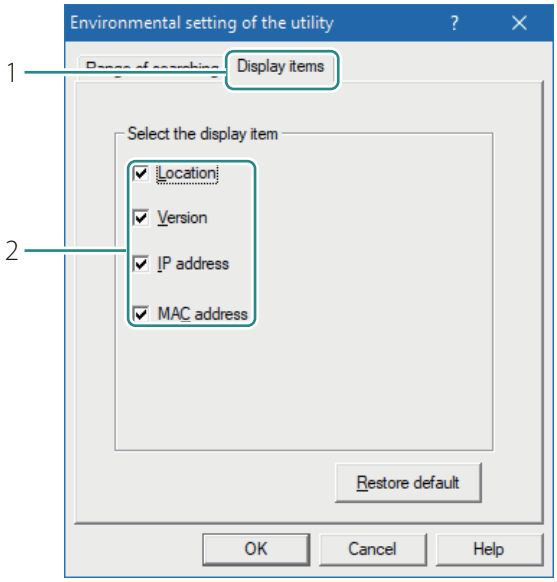

1. Click the [Display Items] tab.
2. Check an item (such as Installation Location) check box to display.

- Clicking [Restore default] will restore the content of the [Display Items] tab to its defaults.

4 Click [OK].

■ Extending Network Time-Out Value

If you want to avoid resending print data due to the printer timing out, or fix errors due to network delays (Bidirectional communication error), extend the network time-out value.

1 From the [Environmental settings] menu, click [Time-out setting].

2 Configure Time-Out Value Extension.

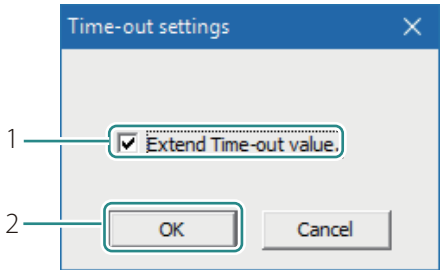

1. Check the [Extend Time-Out value] check box.
2. Click [OK].

Specifications

Printer

Product name	CX-G2400
Printing method	Inkjet
Print colors	Full color
Output resolution	1200 dpi x 1200 dpi
Printing speed	Business Card/Plastic Card: 50 sheets/min Card (Length 157 mm (6.18 inch) or more): 25 sheets/min
Transport speed	Auto mode: 160, 120, 80 mm/sec (Speed changes automatically) Manual mode: 160, 120, 80 mm/sec
Printable area (W x L)	57.4 mm x 171.4 mm (2.26 inch x 6.75 inch)
Print margin (in relation to paper transport direction)	Top/Bottom: 0.3 mm (0.01 inch), Left/Right: 0.3 mm (0.01 inch)[*1](Micro margin printing) When the paper guides are adjusted to the paper width: Top/Bottom: 1.5 mm (0.06 inch), Left/Right: 2.0 mm (0.08 inch)
Printhead	2766 nozzles for each color (effective nozzles)
Ink used	Water based dye ink Yellow (Y), Magenta (M), Cyan (C), and Black (Bk)
Interface	USB 2.0 (High Speed), 1000BASE-T/100BASE-TX/10BASE-T Ethernet
Operating noise	Approx. 58 dB (A) or less
Installation environment	Temperature: 15 to 30 degrees Celsius (59 to 86 degrees Fahrenheit) Humidity: 10% to 80% (no condensation)
Power supply (AC adapter used)	AC100 - 240 V, 50/60 Hz
Power consumption	Maximum power consumption: Approx. 150 W Sleep mode: Approx. 5.6 W or less
Dimensions (W x D x H)	391 mm x 180 mm x 279 mm (15.4 inch x 7.1 inch x 11.0 inch))
Weight	Approx. 8 kg (Approx. 17.6 lbs.) (without ink tank)

[*1] When the print margins are off alignment, adjust the print trimming position for micro margin printing. Refer to "Adjusting the Trimming Position". (P.49)

- This printer employs a dye ink system. The colors in printouts may deteriorate due to chemical reactions caused by exposure to normal infrared light, nitrous or sulfuric fumes and other oxidizing chemicals in the air.
- To conserve the consumption of printing paper, the printer can print on the reverse side. To print on both sides of paper, use paper suited for duplex printing.

Paper

Paper	Dedicated paper (matte coated paper, glossy paper) Dedicated plastic card (for Inkjet)
Paper size	51.0 mm - 58.0 mm (2.01 inch - 2.28 inch) (W) 81.0 mm - 91.0 mm (3.19 inch - 3.58 inch), 157.0 mm - 172.0 mm (6.18 inch - 6.77 inch) (L)
Paper thickness	Sheets: 0.21 mm - 0.76 mm (8.27 mil - 29.9 mil) Thick plastic card: About 0.7 mm (27.5 mil) Thin plastic card: About 0.4 mm (15.7 mil)
Tray capacity	Business Card: 250 sheets (thickness 0.245 mm (9.64 mil) or less): Extra thick paper (Card): 100 sheets (thickness 0.76 mm (29.9 mil)) Plastic Card: 100 sheets Card (Length 157 mm (6.18 inch) or more, thickness 0.245 mm (9.64 mil)): 50 sheets
Stacking capacity (Stacker used)	Business Card (thickness 0.245 mm (9.64 mil) or less): 250 sheets

Index

Numerics

1st Print Priority Mode 38, 76

A

Add Custom Paper Type 40, 87
[Advanced Settings] tab 38
Auxiliary Tray 2

B

Belt Cleaning Mode 136
Brightness 67

C

Cancel Print Job 30
Cleaning Sheet Transport 40
Color Balance 64
Color Correction 36, 57
[Color] tab 36
Contrast 67
Copies 34
Customize 42
Custom paper size 42

D

Default Settings 82
Density 66

E

Ejection Slot 4

F

Favorites 34, 79
Feeder Lift Tray 2

H

Half-ton 56

I

ink information 101
Ink Lamp 5, 101
Ink Pre-fire On The Paper 83
Ink Tank Cover 2
IP Address 191

L

LAN Connector 2
Light Cleaning 39, 109
Low Temperature Print Mode 83

M

Maintenance Cartridge 3
Maintenance cartridge information 108
Maintenance Cartridge Lamp 5, 108
Micro Margin Adjustment 40, 50
Micro Margin Printing 24
Monochrome Print 36, 58
Moving The Printer 40, 177

N

Network Utility 187

O

Offline mode 92
Off timer 11
Online mode 92

Operation Panel 2
Operator Call Error 166
Orientation 35
Output Setting Value 39, 126
Overlay 37
Overlay printing 70
[Overlay Settings] tab 37

P

[Page Setup] tab 34
Paper Guide 4
Paper jam 159
paper retainer 139
Paper Switch Lever 2
Pause Key 6
Power Key/Lamp 5
Power Socket 3
Print Head Position Adjustment 39, 114
Print&Hold Mode 83
Print Order 38
Print Quality 36
Print Speed 38, 77

R

Rating Plate 3
Reduce smudge on media edge 83
Replacing the Maintenance Cartridge 102
Resolution 55

S

Service Call Error 171
Sharpness 62
Shipping The Printer 40, 180
Side Guide 2
Sleep 10, 39
Sleep Timer Setting 12, 39
Special Settings 39, 84
Start Status Monitor 39
Status Information 93
Status Lamp 5
Status Monitor 92
Strong Cleaning 39, 111

T

Transport Belt 4, 136
Transport Unit 2, 130
Transport Unit Lever 4
Tray Key 6

U

Uninstall the Printer Driver 185
USB Connector 2
[Utility] tab 39

V

Version Information 35

W

Warning Message 172