Canon

NETWORK CAMERA

VB-C500VD/VB-C500D

Start Guide

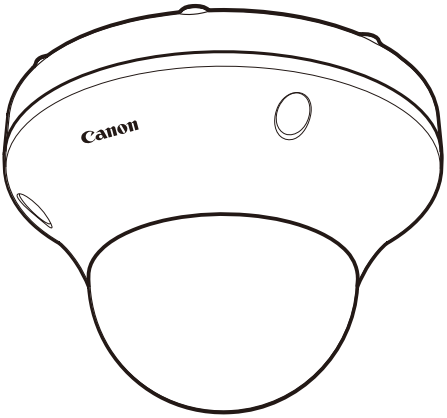

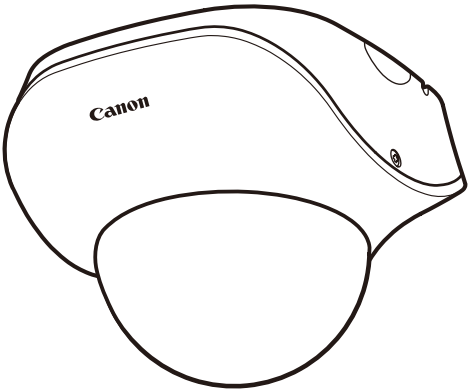

ENG

Please read carefully *Start Guide* and the *Operation Guide*. Especially be sure to read "Safety Precautions" before using the network camera. Keep this guide in a readily accessible location for future reference.

Introduction

Thank you for purchasing Canon Network Camera VB-C500VD/VB-C500D (hereafter referred to as VB-C500VD/VB-C500D).

This *Start Guide* describes how to set up and install the VB-C500VD/VB-C500D. The detailed procedures for using the VB-C500VD/VB-C500D are explained in the *Operation Guide* provided on the Setup CD-ROM. Read these guides carefully before using the VB-C500VD/VB-C500D to ensure that you make the best possible use of this product. Also, be sure to read "Safety Precautions" in this guide.

For the latest information on this product (firmware, bundled software, operation manuals, operating environment, etc.), visit our website.

Disclaimer

To the full extent permitted by laws and regulations, neither Canon Inc. nor any of its subsidiaries or affiliates shall be responsible for any financial losses that may be incurred as a result of the loss of recorded information or images, regardless of the internal or external cause of the loss.

EXCEPT AS SET FORTH IN THE LIMITED WARRANTY ACCOMPANYING THE CAMERA AND WITHOUT DETRACTING FROM ANY RIGHTS A CONSUMER MAY BE ENTITLED TO, AND TO THE FULL EXTENT PERMITTED BY LAWS AND REGULATIONS: (1) NEITHER CANON INC. NOR ANY OF ITS SUBSIDIARIES OR AFFILIATES MAKE ANY WARRANTY OF ANY KIND, EXPRESS OR IMPLIED, WITH REGARD TO THE MATERIAL IN THIS MANUAL OR WITH REGARD TO THE USE OF THE CAMERA INCLUDING, WITHOUT LIMITATION, IMPLIED WARRANTIES AS TO MARKETABILITY, MERCHANTABILITY, FITNESS FOR A PARTICULAR PURPOSE OR USE, OR NON-INFRINGEMENT AND (2) NEITHER CANON INC. NOR ANY OF ITS SUBSIDIARIES OR AFFILIATES SHALL BE LIABLE FOR ANY DIRECT, INCIDENTAL, OR CONSEQUENTIAL DAMAGES OF ANY NATURE RESULTING FROM THE USE OF THIS MATERIAL OR THE CAMERA.

Notes on Network Security

The user is responsible for the network security of this product and its use.

Take appropriate network security measures to avoid security breaches.

To the full extent permitted by laws and regulations, neither Canon Inc. nor any of its subsidiaries or affiliates shall be liable for any losses, direct, incidental or consequential damages, or liabilities that may be incurred as a result of network security incidents such as unauthorized accesses.

<Network Security Recommendations>

- Change the password of the camera periodically.
- Change the HTTP or HTTPS port number of the camera.
- Limit access to the camera by network devices.

Copyright

Videos, images or sounds recorded with your VB-C500VD/VB-C500D may not be utilized or published, without consent of copyright holders, if any, except in such a way as permitted for personal use under the relevant copyright law.

Notes

1. All rights reserved.
2. The contents of this guide are subject to change without any prior notice.
3. This document has been prepared with utmost attention to accuracy. If you have any comment, however, please contact the Customer Service Center indicated on the back cover.
4. Canon shall assume no liability for any outcome of using this product, regardless of Items 2 and 3 above.

Notes on privacy and publicity rights regarding the utilization of video/audio

When using the VB-C500VD/VB-C500D (for video or audio recording), it is the responsibility of the users to take all care to protect privacy and avoid any violation of publicity rights. Canon shall have no liability whatsoever in this regard.

Reference

- Please be sure to gain approval of the building management office before installing a camera, if copyrighted architectural structures or copyrighted premises are appear in the frame.

Legal Notice

In some countries or regions, monitoring via a camera is banned by the law or regulation, and the law or regulation depends on the country or region. Before using the VB-C500VD/VB-C500D, confirm the law or regulation of the country or region where the camera is used.

Trademark Notice

- Canon and the Canon logo are registered trademarks of Canon Inc.
- Microsoft Windows and Microsoft Internet Explorer are trademarks or registered trademarks of Microsoft Corporation in the United States and other countries.
- Windows is legally recognized as the Microsoft Windows Operating System.
- Other brands or product names in this guide are trademarks or registered trademarks of their respective companies.

⚠ Warning

To reduce the risk of fire or electric shock, do not expose this appliance to rain or moisture.

Notes on Use of Bundled Software RM-Lite (Disclaimer)

Malfunction, failure of RM-Lite or other factors may cause problems, such as recording failure, recorded data corruption or loss. Canon shall have no liability whatsoever for any loss or damages incurred by the user as a result of such problems.

Notes on License Agreement for Bundled Software

See the following files in the BundledSoftware folder inside the LICENSE folder of the bundled Setup CD-ROM for information regarding the license agreement for bundled software.

Software Type	File Name
VB Initial Setting Tool, VBAdmin Tools	VBTools.txt
Network Video Recording Software RM-Lite	RM-Lite.txt

European Union (and EEA) only.

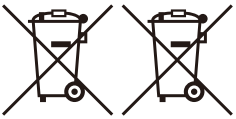

These symbols indicate that this product is not to be disposed of with your household waste, according to the WEEE Directive (2002/96/EC), the Battery Directive (2006/66/EC) and/or your national laws implementing those Directives.

This product should be handed over to a designated collection point, e.g., on an authorized one-for-one basis when you buy a new similar product or to an authorized collection site for recycling waste electrical and electronic equipment (EEE) and batteries and accumulators. Improper handling of this type of waste could have a possible impact on the environment and human health due to potentially hazardous substances that are generally associated with EEE.

Your cooperation in the correct disposal of this product will contribute to the effective usage of natural resources.

For more information about the recycling of this product, please contact your local city office, waste authority, approved scheme or your household waste disposal service or visit www.canon-europe.com/environment.

(EEA: Norway, Iceland and Liechtenstein)

MPEG-4

NOTICE ABOUT THE MPEG-4 VISUAL STANDARD: THIS PRODUCT IS LICENSED UNDER THE MPEG-4 VISUAL PATENT PORTFOLIO LICENSE FOR THE PERSONAL AND NON-COMMERCIAL USE OF A CONSUMER TO (i) ENCODING VIDEO IN COMPLIANCE WITH THE MPEG-4 VISUAL STANDARD ("MPEG-4 VIDEO") AND/OR (ii) DECODING MPEG-4 VIDEO THAT WAS ENCODED BY A CONSUMER ENGAGED IN A PERSONAL AND NON-COMMERCIAL ACTIVITY. NO LICENSE IS GRANTED OR SHALL BE IMPLIED FOR ANY OTHER USE. ADDITIONAL INFORMATION INCLUDING THAT RELATING TO PROMOTIONAL, INTERNAL AND COMMERCIAL USES AND ADDITIONAL LICENSING MAY BE OBTAINED FROM MPEG LA, LLC. SEE HTTP://WWW.MPEGLA.COM.

This product is licensed under AT&T patents for the MPEG-4 standard and may be used for encoding MPEG-4 compliant video and/or decoding MPEG-4 compliant video that was encoded only (1) for a personal and non-commercial purpose or (2) by a video provider licensed under the AT&T patents to provide MPEG-4 compliant video. No license is granted or implied for any other use for MPEG-4 standard.

Open Source Software

The product (VB-C500VD/VB-C500D and bundled RM-Lite Viewer) contains Open Source Software modules. See OpenSourceSoftware.pdf on the bundled Setup CD-ROM for details. Each module's license conditions are also available in the License folder on the same Setup CD-ROM.

Software under GPL and LGPL

If you would like to obtain the source code under GPL/LGPL, please contact the dealer where you purchased the product, or a sales agent.

Security Export Control

This product is subject to security export control. Therefore, to export or carry it overseas may require an authorization by governmental agencies.

Contents

■ Introduction ii

■ Checking of Bundled Items ix
Operation Manuals x

■ How to Read This Document xi
Symbols Used for Safety Precautions xi

■ Safety Precautions xii
Maintenance xvii

Chapter 1 Before Use

■ Features of VB-C500VD/VB-C500D 1-2

■ Bundled Software 1-5
VB Initial Setting Tool 1-5
VBAdmin Tools 1-5
VB-C500 Viewer 1-6
Network Video Recording Software RM-Lite 1-6

■ Operating Environment 1-10
VB Initial Setting Tool, VBAdmin Tools, VB-C500 Viewer 1-10
Network Video Recording Software RM-Lite 1-11

■ Notes on Operating Environment 1-12
Notes on Use When the [Windows Firewall] Function is Enabled 1-12
Notes on Use with Windows Server 2003/Windows Server 2008 1-13
Notes on Use with Windows Server 2008 1-15
Notes on Use with Windows Vista or Later 1-17
Name and Function of Each Part 1-18

■ Optional Items 1-21
Audio Interface Cable WA500-VB 1-21
I/O Interface Cable WC500-VB 1-22
Power Interface Cable WP500-VB 1-22
Recessed Mounting Kit SR500-S-VB 1-23
AC Adapter PA-V17 1-23
RM-Lite Additional Viewer License 1-23
Network Video Recording Software RM-64/RM-25/RM-9 1-24

Chapter 2 Initial Setting and Installation of Camera

■ Flow of Setup 2-2

■ Step 1 Install the Software 2-4
Install the Necessary Software 2-4

■ Step 2 Connect the Camera to the Network 2-6
Connect the Camera to the Network and Turn On the Power 2-6

■ Step 3 Perform Initial Setting of the Camera 2-10
Perform Initial Setting of the Camera 2-10
Check the Video Captured by the Camera 2-13

■ Step 4 Install the Camera 2-15
Installation Procedure for Direct Mounting on a Ceiling/Wall 2-16
Installation Procedure for In-Ceiling with a Ceiling/Wall 2-27

Chapter 3 Appendix

■ External Dimensions 3-2
VB-C500VD 3-2
VB-C500VD/VB-C500D 3-3
Recessed Mounting Kit SR500-S-VB (Option) 3-3

■ Main Specifications 3-4

■ Input/Output Terminals 3-6
External Device I/O Terminals 3-6
Audio Input/Output Terminals 3-8

Checking of Bundled Items

This product comes with the following items. If any item is missing, contact the store where you purchased the product.

1. VB-C500VD/VB-C500D main unit

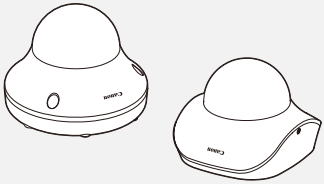

2. Safety Wire

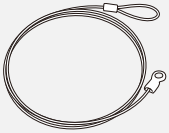

3. Ceiling Mount Template

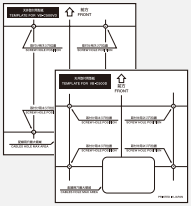

4. Setup CD-ROM

5. Dome Case Lock Screw Wrench
(VB-C500VD only)

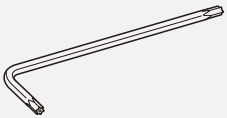

6. Screw Caps
(VB-C500VD only)

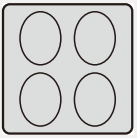

7. Start Guide (This document)

8. Warranty Card (different depending on the region)

Content of Setup CD-ROM

DOC	:	Folder containing operation manuals and notes other than this document*
APPLICATIONS	:	Folder containing the installers for bundled software (two installers specified below)*
VBToolsInstall.exe	:	Installer for VB Initial Setting Tool and VBAdmin Tools*
RMLiteInstall.exe	:	Installer for Network Video Recording Software RM-Lite*
LICENSE	:	Folder containing various license information
BundledSoftware	:	Folder containing license provisions for VB-C500VD/VB-C500D built-in software*
OpenSourceSoftware	:	Folder containing license provisions for bundled software*
SOUND	:	Folder containing sample audio files

*Check our website for the latest versions of bundled software and operation manuals.

Operation Manuals

The VB-C500VD/VB-C500D comes with *Start Guide* (this document) and *Operation Guide* included in the Setup CD-ROM.

Start Guide (This Document)

The safety precautions to be followed when using the VB-C500VD/VB-C500D, types of bundled software, operating environment, installation method, initial setting of the camera, etc., are explained.

Operation Guide (VBC500OG_E.pdf)

This document explains the basic setup procedure for the VB-C500VD/VB-C500D, how to use VBAdmin Tools and VB-C500 Viewer, troubleshooting, etc. *Operation Guide* can be found on the Setup CD-ROM. References to *Operation Guide* will be given as follows.

Example: →"Setting Menu" in *Operation Guide*

Also, a simplified version of recording software RM-Lite (→ P. 1-6) is stored in the Setup CD-ROM. The following operation manuals are available for RM-Lite.

Administrator's Manual (RM10AM_E.pdf)

This document explains the items to note when using RM-Lite, as well as operating environment requirements, system configuration, installation and setup methods, and other details on how to use the software. Be sure to read this document.

Viewer Operation Guide (RM10VOG_E.pdf)

This document explains a basic operation of the RM-Lite viewer. For the detailed operating procedures of the viewer, refer to *Administrator's Manual*.

How to Read This Document

The screenshots used in the *Start Guide* and *Operation Guide* are mainly from Windows Vista and Windows 7. Unless otherwise specified, the same screens apply for other operating systems.

Symbols Used for Safety Precautions

In this document, the following symbols are used to indicate important items the user should know to use this product safely. Be sure to observe these items.

Symbol	Meaning
Warning	Inappropriate handling against the instruction accompanied by this symbol may result in death or injury. Be sure to observe this precaution to use the product safely.
Caution	Inappropriate handling against the instruction accompanied by this symbol may result in injury. Be sure to observe this precaution to use the product safely.
Note	Inappropriate handling against the instruction accompanied by this symbol may result in property damage. Be sure to observe these precautions.
Note	This symbol indicates other action or item that requires attention.
Tip	Supplementary information or a reference to the operation is explained. Users are recommended to read these memos.

Safety Precautions

The following explains the items that must be observed when using the VB-C500VD/VB-C500D.

If they are not observed, injury, death and/or property damage may occur. Read the following information carefully and observe the instructions without fail.

⚠Important Warnings

⚠CAUTION

TO REDUCE THE RISK OF ELECTRIC SHOCK, DO NOT REMOVE COVER (OR BACK). NO USER-SERVICEABLE PARTS INSIDE. REFER SERVICING TO QUALIFIED SERVICE PERSONNEL.

The AC adapter can be connected to VB-C500VD/VB-C500D from a standard AC power outlet.
Please check your instruction manual to make sure that your VB-C500VD/VB-C500D is compatible with this adapter.

- The socket-outlet should be installed near the equipment and should be easily accessible.
- Unplug the equipment from the wall outlet before cleaning or maintaining.

FDA regulation

This Network Camera has not been evaluated by the Food and Drug Administration (FDA) for use as a medical device. When incorporated into a system with medical applications, FDA regulations may apply. Therefore, please consult your legal advisor to determine whether FDA regulations apply.

АЯ46

FCC NOTICE

Network Camera, Model Name: VB-C500VD/VB-C500D

This device complies with Part 15 of the FCC Rules. Operation is subject to the following two conditions: (1) This device may not cause harmful interference, and (2) this device must accept any interference received, including interference that may cause undesired operation.

Note: This equipment has been tested and found to comply with the limits for a Class B digital device, pursuant to Part 15 of the FCC Rules. These limits are designed to provide reasonable protection against harmful interference in a residential installation. This equipment generates, uses and can radiate radio frequency energy and, if not installed and used in accordance with the instructions, may cause harmful interference to radio communications.

However, there is no guarantee that interference will not occur in a particular installation. If this equipment does cause harmful interference to radio or television reception, which can be determined by turning the equipment off and on, the user is encouraged to try to correct the interference by one or more of the following measures:

- Reorient or relocate the receiving antenna.
- Increase the separation between the equipment and receiver.
- Connect the equipment into an outlet on a circuit different from that to which the receiver is connected.
- Consult the dealer or an experienced radio/TV technician for help.

Use of shielded cable is required to comply with class B limits in Subpart B of Part 15 of FCC Rules.

Do not make any changes or modifications to the equipment unless otherwise specified in the manual. If such changes or modifications should be made, you could be required to stop operation of the equipment.

Canon U.S.A. Inc.
One Canon Plaza, Lake Success, NY 11042, U.S.A.
Tel No. (516) 328-5600

Canadian Radio Interference Regulations

This Class B digital apparatus complies with Canadian ICES-003.

Precautions for Installation

⚠ Warning

Do not install the product in the following places:

- **Place receiving strong direct sunlight, near heat generating objects, or subject to high temperature**
- **Place near fire sources or flammable solvents (alcohol, thinner, etc.)**
- **Humid or dusty place**
- **Place subject to lamp black or steam**
- **Place subject to sea wind**
- **Narrow, sealed place**

Fire or electric shock may result.

Note

For installation or inspection of the VB-C500VD/VB-C500D, consult/request the store where you purchased the product.

- **Wire the VB-C500VD/VB-C500D power supply, network, or other cables safely and securely according to the relevant regulations such as technical standards for electrical installations.**
- **When installing the VB-C500VD/VB-C500D, select a ceiling surface, etc., capable of withstanding the total weight of the camera and all options used (Recessed Mounting Kit), provide sufficient reinforcements and use the bundled safety wire if necessary.**
- **To prevent injuries and equipment damage due to falling items, periodically check the brackets and screws for rusting and loosening.**

- **Do not install the VB-C500VD/VB-C500D to the place with strong vibration.**
- **Do not install the VB-C500VD/VB-C500D on the uneven, inclined, or other unstable surface.**
- **(VB-C500VD) Do not install the network camera to the place where is not strong enough or where is easily affected by vibration. Otherwise, the vandal resistant feature may not be made the best use of.**

Malfunction may result.

Precautions for Use

⚠ Warning

- **If smoke, abnormal noise, heat, odor or any other abnormality is detected, immediately stop using the camera and contact your nearest Canon dealer.**

Continuing to use the product may result in fire or electric shock.

- **Do not disassemble or modify the camera.**
- **Do not put water or other liquid in the camera or splash or otherwise wet the camera.**
- **Do not put foreign objects in the camera.**
- **Do not use sprays of flammable gases near the camera.**
- **When the camera is not used for a long period, disconnect the LAN cable, external power supply and power connector for AC adapter (optional) from the camera.**

Fire or electric shock may result.

Note

- **Do not use this camera for medical devices and other systems that affect human life.**

Delayed or missing image transmission may occur depending on the PC and network environment, and thus high image transmission accuracy cannot be assured.
Canon will assume no liability for any accident or damage resulting from use of the VB-C500VD/VB-C500D in the aforementioned devices or systems.

- **Do not capture the sun, halogen lamps and other very bright light sources or subjects.**
- **Do not apply strong impact or vibration to the VB-C500VD/VB-C500D.**

Malfunction may result.

This installation should be made by a qualified service person and should conform to all local codes.

Notes on Use of Motion Detection, Stream for Recording and Bundled Recording Software RM-Lite

Note

- **Avoid using Motion Detection, Stream for Recording or recording software RM-Lite for surveillance where very high level of reliability is constantly required.**

These are support functions for monitoring. They do not guarantee monitoring with very high accuracy, however, as they might not work as accurately as expected under certain conditions. Canon will assume no liability for any accident or damage resulting from use of these functions.

Precautions for Use of Optional AC Adapter PA-V17

⚠ Warning

- **Do not use any AC adapter or AC cable other than the dedicated AC adapter or AC cable.**
- **Do not put heavy objects on the power cable.**
- **Do not pull, forcibly bend, scratch or modify the power cable.**
- **Do not cover or wrap the AC adapter (optional) with a cloth or thick cotton blanket.**

Fire or electric shock may result.
Be sure to read the operation manual for PA-V17 before use.

Notes on Cleaning

⚠ Warning

- **Do not use alcohol, thinner, benzine or any other flammable solvent.**

Fire or electric shock may result.

Maintenance

Turn off the power before cleaning the camera (→ P. 2-7).

■ Cleaning of Exterior

1. Dampen a soft cloth with water or diluted neutral detergent and wipe the soiled areas gently.
2. Wipe with a dry cloth.

■ Cleaning of Lens

Use a commercial lens cleaner to remove soiling on the lens surface.

- Scratches on the lens surface may result in undesirable images.

■ Maintenance for Dome Case

A soiled dome is a cause of poor image quality, so clean the dome periodically.

1. Remove the dome case, referring to "Installation Procedure for Direct Mounting on a Ceiling/Wall" (→ P. 2-16) in "Chapter 2 Initial Setting and Installation of Camera".
2. Dampen a soft cloth with water or diluted neutral detergent and wipe the soiled areas gently.
3. Wipe with a dry cloth.
4. When you are done, install the dome case.

To prevent injuries and equipment damage due to falling items, periodically check the brackets and screws for rusting and loosening.

For checkups, please contact the dealer where you purchased the product.

■ Maintenance for Recessed Mounting Kit (Optional)

To prevent injuries and equipment damage due to falling items, periodically check the brackets and screws for rusting and loosening.

For checkups, please contact the dealer where you purchased the product.

1

Before Use

The following explains the features of this camera, bundled software, operating environment, and name and function of each part.

Features of VB-C500VD/VB-C500D

The VB-C500VD/VB-C500D is a compact network camera for indoor installation integrating camera and server features.

■ Shock resistant materials and mechanism (VB-C500VD)*

The VB-C500VD incorporates alloyed aluminum and polycarbonate plastics of 3.5 mm thickness on its exterior. In addition, the VB-C500VD's body has a mechanism that helps it absorb shocks during impacts. Special screws used in the VB-C500VD's dome case are hard to loosen, making it more difficult for the VB-C500VD to be tampered with.

* The features described above do not guarantee that the product will be undamaged if subjected to an impact, nor that the product is tamper-proof or tamper-resistant.

■ Wide-angle Varifocal Lens

Equipped with a wide-angle varifocal lens with a wide angle of 82°, F1.1 and optical 2.4x zoom (digital 4x), the VB-C500VD/VB-C500D achieves video monitoring in wide-ranging applications, including stores and offices, as well as applications in small areas such as at ATM and in elevator halls.

■ Compact Design Suitable for Various Installation Environments

The ultra-compact dome camera of 3.7 inches in size (dome diameter) can be installed inconspicuously in locations where appearance is given priority, such as in condominiums and hotel stores. It can be installed in various ways, such as directly mounted on a ceiling or wall, or recessed into a ceiling or wall.

■ Capturing Color Images at 0.2 Lux

With its high imaging quality, the camera can capture color images at a minimum subject illumination of 0.2 lux while maintaining low noise and high color repeatability (when the 1/30-second Smart Shade Control is turned on).

■ Digital Night Mode Function to Automatically Adjust to Capturing at Low Illumination

When the illumination is low, such as during nighttime, the capture mode is automatically switched from color to monochrome and Canon's unique low-noise, high-quality imaging technology is used to increase the digital sensitivity. If the Digital Night Mode function is used, images can be captured at a minimum subject illumination of 0.1 lux (when the 1/30-second Smart Shade Control is turned on).

■ Smart Shade Control

When the background is bright and the subject is difficult to see, you can change the contrast of dark areas to make the subject clearer. Unlike the backlight compensation, blown out of the background can be prevented because bright areas are not controlled. These processes are implemented by the dedicated hardware in the camera, so drops in image quality can be reduced and system load can be decreased compared to when the conventional shade control is used (→"Setting the Smart Shade Control" in *Operation Guide*).

■ PoE

The VB-C500VD/VB-C500D supports Power over Ethernet (PoE*) technology, which enables simultaneous video/audio data transmission and power supply by simply connecting a PoE HUB and a single LAN cable (→ P. 2-6). When connecting to a PoE HUB, you need not connect a power adapter to the camera or perform any power wiring.

* PoE stands for Power over Ethernet, which is compliant with the IEEE 802.3af standard by the Institute of Electrical and Electronic Engineers.

■ Install-Free VB-C500 Viewer

This camera has a built-in VB-C500 Viewer, so its data can be viewed using a browser. Accordingly, there is no need to install a PC application. Also, three levels of user privileges can be set, including [Administrator], [Authorized User] and [Guest User].

■ Canon's Network Video Processor "DIGIC NET"

The camera incorporates DIGIC NET that offers high network distribution performance and a range of intelligent functions to achieve high image quality and high-speed communication such as simultaneous distribution of JPEG and MPEG-4.

■ Simultaneous Distribution of JPEG and MPEG-4

Video compression adopts JPEG/MPEG-4 to achieve high image quality/high frame rate of up to 30 frames per second*1 in VGA (640x480). Up to 30 clients*2 can view the same image simultaneously.

*1 Note that the frame rate may drop depending on the performance of the viewer PC, number of clients connected at the same time, network load, etc.

*2 In MPEG-4, up to 10 clients can be connected at the same time.

■ Multi-Streaming

In JPEG, image can be distributed in three sizes (640x480, 320x240, 160x120) at the same time.

■ High Quality Video of Moving Subjects

The VB-C500VD/VB-C500D utilizes a progressive-scan CCD to allow for the capture of noiseless, high quality video of moving subjects.

■ Selectable Metering Modes for Various Shooting Conditions

Image can be captured by switching the metering mode* to one of three options, including Center-weighted, Average and Spot, according to the shooting condition of the camera. (→ "Setting Exposure" in *Operation Guide*)

* Brightness (light quantity) of the subject is measured to adjust the exposure.

■ Image Upload Function and Event Notification using E-Mail or Audio

Events generated by the motion detection function or an external input device are used as triggers to upload images temporarily recorded in the camera to the specified location via FTP/HTTP/SMTP (e-mail), or for a notification to be sent via HTTP/SMTP (e-mail). It is also possible to send out a warning message or sound when an event occurs by registering audio files to the camera in advance and connecting speakers.

■ Two-Way Audio (Full Duplex)

A microphone or speaker with amplifier can be connected*1 to the camera to transmit/receive audio (full duplex) via the viewer*2. You can select a desired audio input mode from LINE IN and MIC IN by switching the setting on the setting page (→ P. 3-8).

*1 Microphones and amplifiers are sold separately.
*2 RM-Lite Viewer is the only viewer that supports two-way audio communication.
VB-C500 Viewer only supports audio reception.

■ Small-scale Video Monitoring by Simplified Recording Software RM-Lite

This product comes with a simplifier version RM-Lite of the optional Network Video Recording Software RM-64/RM-25/RM-9 (→ P. 1-6). Video captured by up to four cameras is recorded/displayed in real time, to achieve small-scale video monitoring.

Bundled Software

The VB-C500VD/VB-C500D comes with the software specified below.

For the latest information on this product (firmware, bundled software, operation manuals, operating environment, etc.), visit our website.

VB Initial Setting Tool (→ P. 2-10)

Carries out initial settings for VB-C500VD/VB-C500D. It is installed from Setup CD-ROM (→ P. 2-4). Users other than Administrators need not install this tool.

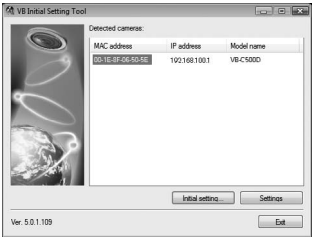

VBAdmin Tools

(→ "Overview of VBAdmin Tools" in *Operation Guide*)

VBAdmin Tools are for visually setting motion detection and for displaying logs taken by the camera. It is installed from Setup CD-ROM (→ P. 2-4). Users other than Administrators need not install this tool.

Note

To use the camera with VBAdmin Tools for the VB-C60, VB-C300 or VB-C50 series, install VBAdmin Tools for the VB-C50 series first, and then install VB-C300, install VB-C60, and finally install VBAdmin Tools bundled with the camera.

Tip

VB Initial Setting Tool can be used commonly with the VB-C60, VB-C300 and VB-C50 series.

VB-C500 Viewer

(→ "Overview of VB-C500 Viewer" in *Operation Guide*)

VB-C500VD/VB-C500D Viewer is for displaying video captured by this camera and controlling the camera. User authority settings for [Administrator], [Authorized User], and [Guest User] can be made, and [Authorized User] and [Guest User] control privilege restrictions applied, on the VB-C500VD/VB-C500D setting page. VB-C500 Viewer is already built into the camera and need not be installed beforehand (→P. 2-4).

Only JPEG can be displayed. To display MPEG-4 video, install RM-Lite Viewer (→P. 1-7).

Network Video Recording Software RM-Lite

(→ *Administrator's Manual*)

RM-Lite, which is a simplified version of the optional "Network Video Recording Software RM-64/RM-25/RM-9" (→ P. 1-24), is included in the package. RM-Lite consists of the following two software programs:

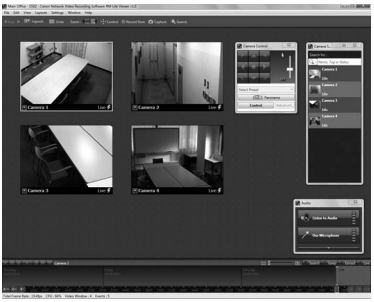

Software Configuration of RM-Lite

Type	Overview	License
RM-Lite Storage Server	Up to four cameras can be registered to record video.	1 license
RM-Lite Viewer	Recorded video saved in the storage server can be played or live video (JPEG/MPEG-4) can be displayed as it is captured by the camera. Up to four cameras can be registered for the viewer.	1 license

RM-Lite Storage Server and RM-Lite Viewer can also be installed in, and run on, the same PC.

Configuration example based on installation on the same PC

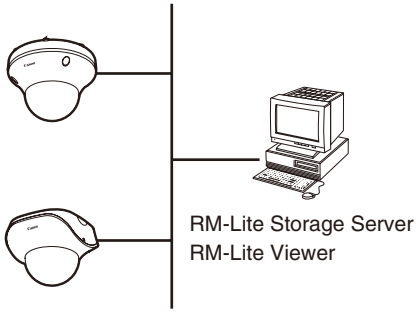

For RM-Lite, following cameras can also be registered and used.

Supported cameras	VB-M40, VB-M600VE, VB-M600D, VB-M700F, VB-C500VD/VB-C500D, VB-C60, VB-C300, VB-C50i/VB-C50iR, VB-C50FSi, VB-C50Fi

Note

To add a RM-Lite Viewer, you need to purchase an optional RM-Lite Additional Viewer License.

Key Functional Limitations of RM-Lite and RM-64/RM-25/RM-9

Features		RM-Lite	RM-64/RM-25/RM-9
Connection to camera	Max. number of cameras	4	64/25/9
Storage Server	Recording formats	JPEG only	JPEG, MPEG-4, H.264
	Max. recording frame rate	5 fps	30 fps *1
	Recording schedule	Weekly schedule recording	Weekly schedule recording Special Day schedule recording
	Recording mode	Continuous recording Manual recording	Continuous recording Sensor recording Motion detection recording Intelligent function recording Audio detection recording Manual recording
	Max. storage period	12 weeks	99 weeks
Viewer	Number of simultaneous video windows	8 or less is recommended.	32 or fewer per layout
	Layout sequence feature *2	No	Yes

*1 The operational limits apply depending on the number of cameras, Storage Server performance, hard disk capacity, and network load.
*2 The layout sequence feature is a function for changing Viewer layouts at a specified interval.

You cannot connect to RM-Lite Storage Server from RM-64/RM-25/RM-9 Viewer

Note

For details on the operating methods and function limitations pertaining to RM-Lite, see the *Administrator's Manual*.

Comparison of Two Viewers

The VB-C500VD/VB-C500D has two viewers. The key differences are specified below.

Viewer type	Live video display	Audio
VB-C500 Viewer	JPEG	Receive audio from the VB-C500VD/VB-C500D (one-way communication)
RM-Lite Viewer	JPEG/MPEG-4	Transmit/receive audio (two-way communication)

VB-C500 Viewer Audio Reception (One-way Communication)

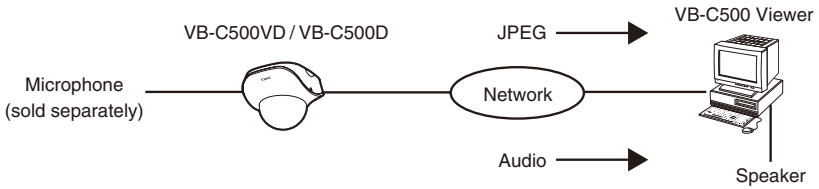

Audio from the microphone connected to the VB-C500VD/VB-C500D can be listened from the viewer speaker.

RM-Lite Viewer Audio Transmission/Reception (Two-way Communication)

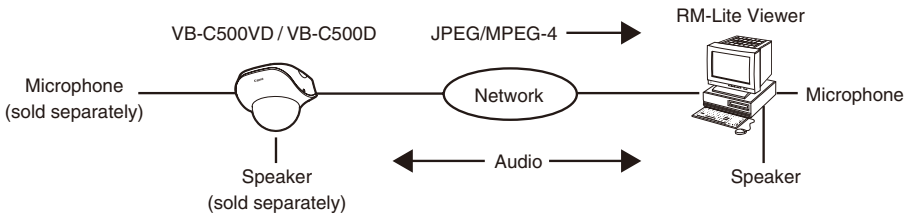

Audio can be transmitted/received between the VB-C500VD/VB-C500D and viewer.

Tip

PC, speaker and microphone are sold separately.

Operating Environment

For the latest information on this product (firmware, bundled software, operation manuals, operating environment, etc.), visit our website.

VB Initial Setting Tool, VBAdmin Tools, VB-C500 Viewer

OS	Windows XP Home Edition/Professional SP3 32bit Windows Server 2003 Standard SP2 32bit Windows Server 2003 R2 Standard SP2 32bit Windows Vista Ultimate/Business/Enterprise/Home Premium SP1 32/64bit Windows Vista Ultimate/Business/Enterprise/Home Premium SP2 32/64bit Windows 7 Ultimate/Professional/Enterprise/Home Premium 32/64bit Windows 7 Ultimate/Professional/Enterprise/Home Premium SP1 32/64bit Windows Server 2008 Standard SP1 32/64bit Windows Server 2008 Standard SP2 32/64bit Windows Server 2008 R2 Standard 64bit Windows Server 2008 R2 Standard SP1 64bit
Web browser	Internet Explorer 6.0/7.0/8.0/9.0 32bit* * JavaScript and cookies must be enabled.
Viewer display	1024 x 768 or more* * Set the dpi setting to 96 dpi (standard) or 120 dpi (expanded 120%).
Audio	If the camera's audio feature is used, the PC's audio support feature is required.

Network Video Recording Software RM-Lite

CPU	Intel XEON 3060 2.4 GHz, Intel Core 2 Duo 2.4 GHz or higher, or an Intel CPU of equivalent class that meets the following requirements. Clock: 2.4 GHz or higher L2 cache: 4 MB or higher Core count: 2 or more
OS	Windows Server 2003 R2 Standard SP2 32bit Windows Vista Ultimate/Business/Enterprise/Home Premium SP2 32/64bit Windows 7 Ultimate/Professional/Enterprise/Home Premium SP1 32/64bit Windows Server 2008 Standard SP2 32/64bit Windows Server 2008 R2 Standard SP1 64bit
Memory	2 GB or more
Hard disk	200 MB of disk space is required for installation (additional 500 MB is required if .NET Framework 3.5 SP1 is not installed) The hard disk drive for the recording data should have a capacity of 1 GB or greater.
Viewer display	1280 x 1024 resolution or higher 16-bit colors or greater
Audio	To use the camera's audio function or enable audio alert for event notification when the viewer is used, the PC's audio support feature is required.

Tip

The optional RM-64/RM-25/RM-9 does not support Windows Vista Home Premium and Windows 7 Home Premium.

Notes on Use When the [Windows Firewall] Function is Enabled

When [VB Initial Setting Tool] is started, the [Windows Security Alert] dialog box may appear. If the [Windows Security Alert] dialog box appeared, click [Unblock].

Once this button is clicked, this warning dialog box will no longer appear.

If the [Windows Security Alert] dialog box is not displayed, the warning function of the Windows firewall may be disabled. Follow the procedure below to add [VB Initial Setting Tool] as an exception to the Windows Firewall.

1. Click [Control Panel] and select [Windows Firewall]. If you are using Windows Vista/Server 2008, also click [Allow a program through Windows Firewall].

2. Click the [Exceptions] tab, and then click [Add program...].

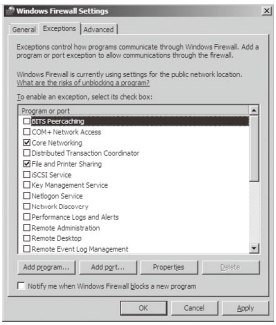

3. The [Add a Program] dialog box appears. Click [VB Initial Setting Tool], and then click [OK].

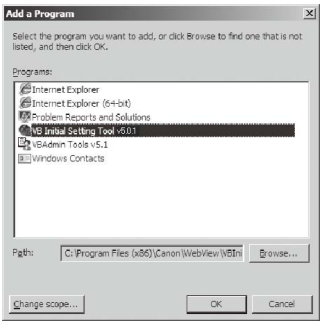

Notes on Use with Windows Server 2003/Windows Server 2008

■ Registering the Camera's Top page as a Trusted Site

In Windows Server 2003 and Windows Server 2008, the security level for Internet sites and intranet sites on Internet Explorer is set to [High] by default.

Accordingly, when you access the top page of the camera, VB-C500 Viewer or any setting page, the contents block dialog box appears and the page is not displayed correctly.

To display these pages correctly, register them as trusted sites.

1. When the camera's top page is accessed via Internet Explorer, the following dialog box appears. Click [Add].

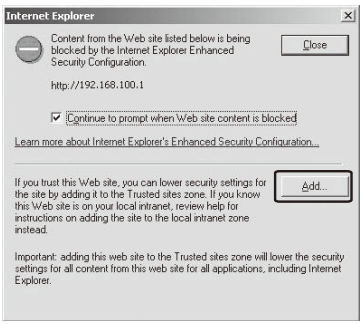

2. The [Trusted sites] dialog box appears.

   Clear the [Require server verification (https:) for all sites in this zone] check box, if currently selected.

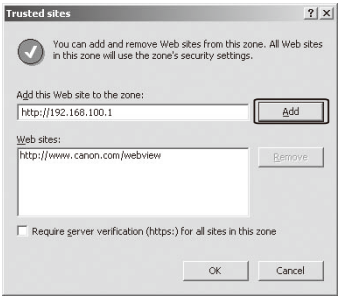

3. Enter the IP address of the VB-C500VD/VB-C500D under [Add this Web site to the zone], and then click [Add].

   For details on registering trusted sites, click the [Learn more about Internet Explorer's Enhanced Security Configuration...] in the dialog box in step 1 and see the displayed overview.

Note that even when the contents block dialog box does not appear, setting pages and operations of VB-C500 Viewer may still be limited because JavaScript is sometimes disabled under the standard security setting. Once the camera's top page is registered as a trusted site, JavaScript is automatically enabled.

If the contents block dialog box does not appear, you can follow the procedure below to display the [Trusted sites] dialog box.

1. Click [Tools] on the Internet Explorer screen, select [Internet Options], the [Internet Options] dialog box appears.
2. Click the [Security] tab.

3. Click [Trusted sites], and then click [Sites].

   The [Trusted sites] dialog box appears.

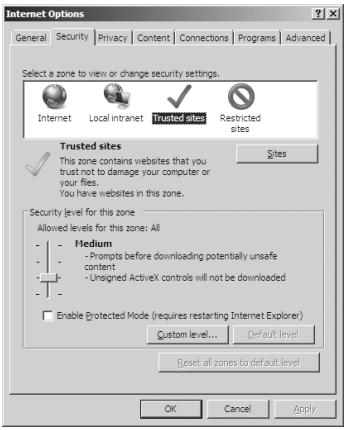

This completes the process of registering the camera's top page as a trusted site.

Notes on Use with Windows Server 2008

■ Enabling the Sound Function to Use Audio

In Windows Server 2008, the sound function is disabled by default. If you want to receive audio on VB-C500 Viewer, enable the sound function by following the procedure below.

1. Click [Control Panel] and select [Hardware and Sound].

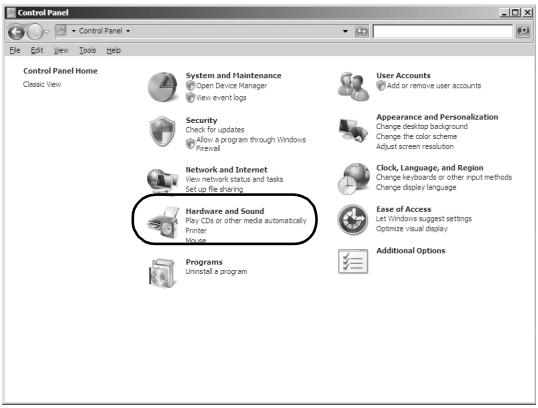

Tip

If [Control Panel] is displayed in a classic view, double-click [Sound].

2. Click [Sound].

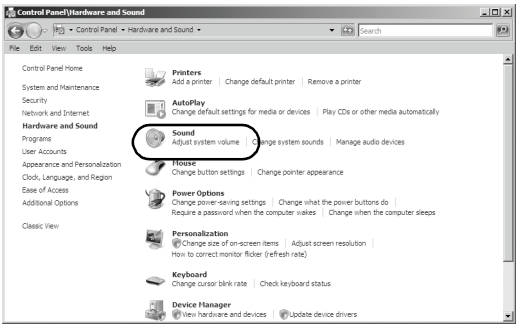

3. An [Audio Service Not Running] message appears. Click [Yes].

4. The [Sound] dialog box appears. Click the [Playback] tab to confirm that an audio device has been installed. (If no audio device is installed, check the manual for your PC.)

Notes on Use with Windows Vista or Later

The following restrictions apply when the VB-C500VD/VB-C500D is used with Windows Vista or later operating systems.

Video Storage Folder

Do not specify the Windows folder or Program Files folder on the system drive as the folder for storing snapshots and specified video files. Images and videos cannot be saved in these folders.

Shadow Backup Function

The shadow backup function cannot be used.

If a setting file of RM-Lite was accidentally deleted, for example, the file cannot be restored using the shadow backup function.

Name and Function of Each Part

Dome Case/Inner Cover/Camera Interior

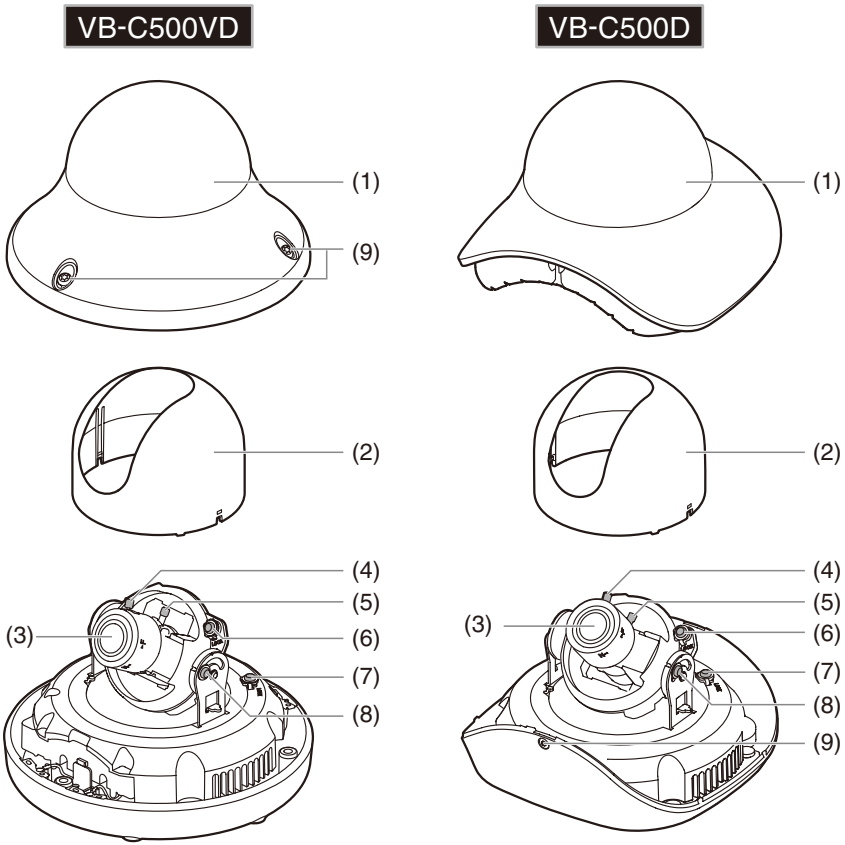

(1) Dome case

(2) Inner cover

(3) Varifocal lens
Horizontal viewing angle 82°

(4) Focus lock screw

(5) Zoom adjustment knob

(6) Rotation lock screw

(7) Pan lock screw

(8) Tilt lock screw

(9) Dome case lock screw

Top View of Camera (Without Dome Case)

VB-C500VD

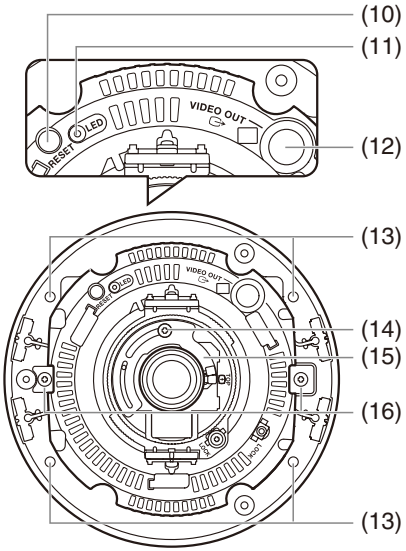

VB-C500D

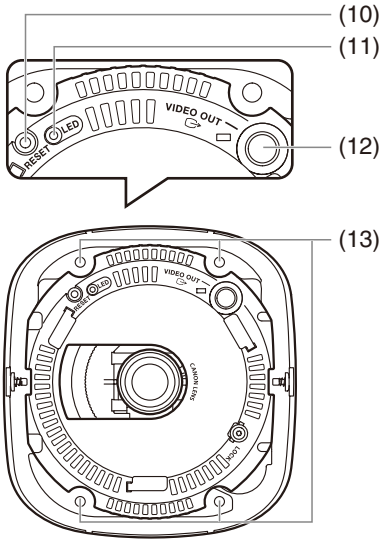

(10) Reset switch

Turn on the power while pushing this switch. Continue to push the switch for 5 seconds or more to restore all factory settings except for the date and time.

(11) LED

The LED becomes lit/unlit according to the status of the camera.

(1) Installation mode: Lit (→ P. 2-25)

(2) Other steady state: Unlit

(12) VIDEO OUT terminal

(13) Mounting screw hole

Use this hole to affix the camera on an installation surface or affix an optional Recessed Mounting Kit.

(14) Zoom lock screw (VB-C500VD only)

Locks the zoom adjustment knob to the set position.

(15) Zoom lock plate (VB-C500VD only)

(16) Damper lock plate (VB-C500VD only)

Locks the damper in place so it doesn't move during shipping or installation. After focus adjustment is complete, remove the plate to enable the damper function.

Bottom

The serial number and the MAC address required for network settings are specified on the bottom of the camera. Write down these information before installing the camera.

VB-C500VD

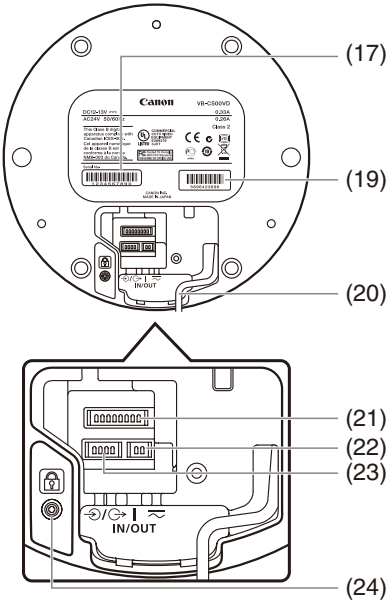

VB-C500D

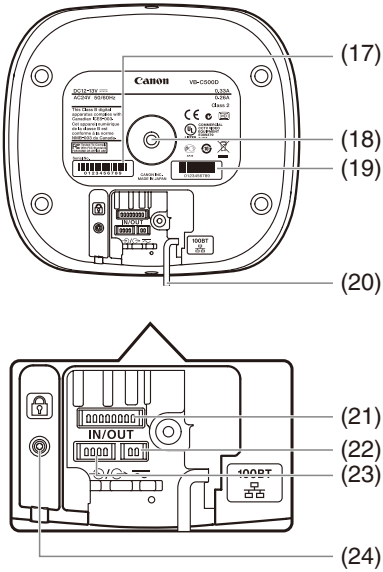

(17) Serial number
Serial number of this camera.
This is also written on the warranty card that comes with the camera.

(18) Tripod mounting screw holes (VB-C500D only)

(19) MAC address
Unique address of this camera.
Write down this address before installing the camera (→ P. 2-10).

(20) LAN connector
100Base-TX
Cable: length 300mm (11.81 in) (UL VW-1 Cable)
PoE power supply (conforming to the IEEE 802.3af standard)

(21) External device I/O terminals (→ P. 3-6)

(22) Power connection terminal (→ P. 2-9)

(23) Audio Input/Output Terminals (→ P. 3-8)

(24) Safety wire screw
Install the safety wire supplied with the camera.

Purchase optional items separately as necessary.

Audio Interface Cable WA500-VB

Use this interface cable (UL VW-1 Cable) to connect the camera to an audio input/output device (speaker, microphone, etc.).

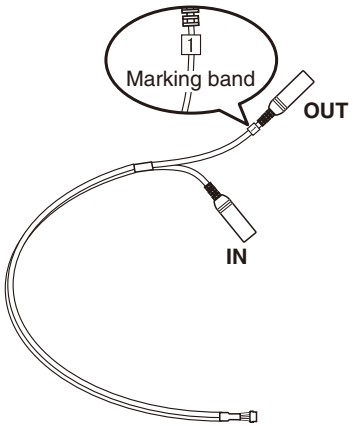

The terminal marked "1" on the marking band (the longer piece from the cable branching point) is used for audio output, while the unmarked terminal (the shorter piece from the cable branching point) is used for audio input.

For details, see "Audio Input/Output Terminals" (→ P. 3-8).

I/O Interface Cable WC500-VB

Use this interface cable (UL VW-1 Cable) to connect the camera to a contact input/output device (sensor, warning lamp, etc.).

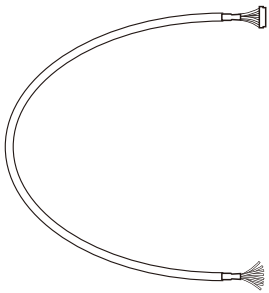

For details, see "External Device I/O Terminals" (→ P. 3-6).

Power Interface Cable WP500-VB

Use this interface cable (UL VW-1 Cable) to connect the camera to an optional AC adapter (PA-V17) or external power supply. For details, see "Use of External Power Supply" (→ P. 2-9).

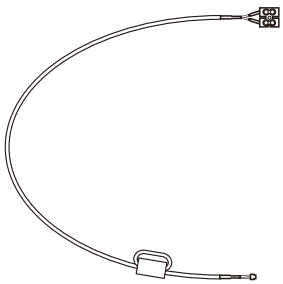

Recessed Mounting Kit SR500-S-VB

The Recessed Mounting Kit is a dedicated option for VB-C500VD/VB-C500D.

Use example

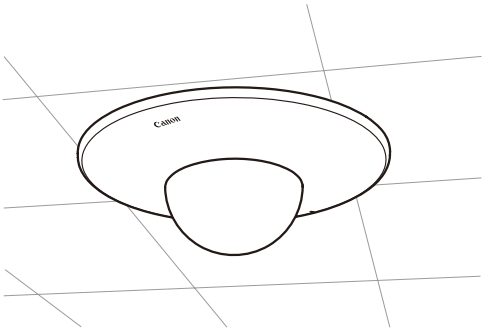

AC Adapter PA-V17

Use this adapter when a PoE HUB or external power supply is not used.

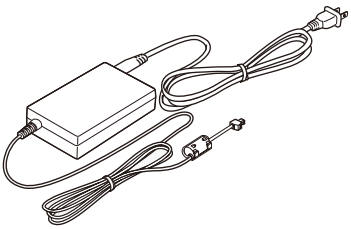

RM-Lite Additional Viewer License

RM-Lite Additional Viewer License is an additional license needed to install RM-Lite Viewer to each PC. You need to purchase the license if you want to view video captured by the camera using RM-Lite Viewer from multiple sites.

Network Video Recording Software RM-64/RM-25/RM-9

High-functional monitoring & recording software that achieves simultaneous monitoring of multiple sites.

Example of RM-64/RM-25/RM-9 Viewer screen

Tip

- The VB-C500VD/VB-C500D can also be used with Network Video Recorder VK-series v2.0 or later. However, the RM-series and VK-series are not compatible with each other.
- This camera comes with RM-Lite, which is a simplified version of RM-64/RM-25/RM-9 (→ P. 1-6). Up to four cameras can be registered and used.

2

Initial Setting and Installation of Camera

The following explains how to install the camera.

First, install the necessary software from the bundled Setup CD-ROM. Next, connect the camera to the network and perform initial setting of the camera. Check the video using VB-C500 Viewer, and then install the camera.

Before installing the camera, be sure to set the IP address.

Step 1 Install the software

Insert the bundled Setup CD-ROM in the PC and install the necessary software (→ P. 2-4).

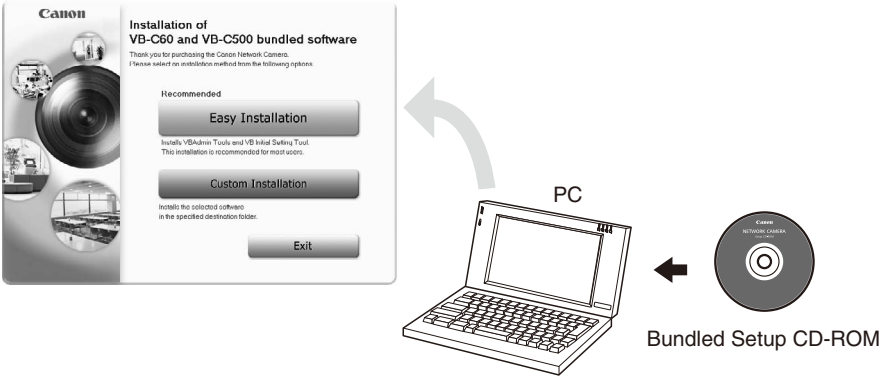

Step 2 Connect the camera to the network

Connect the VB-C500VD/VB-C500D and PC to the network (→ P. 2-6).

If a PoE HUB or Midspan is used, consult your Canon sales representative.

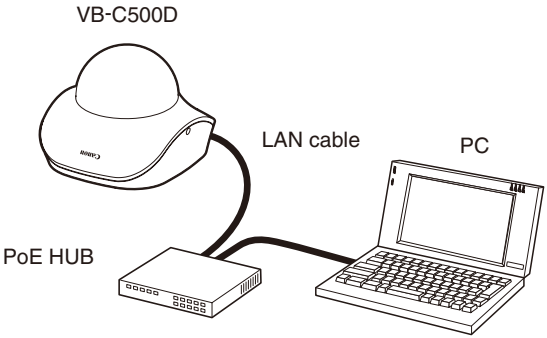

The figure shows an example of connection via a PoE HUB.

Step 3 Perform initial setting of the camera

Start VB Initial Setting Tool and perform initial setting of the camera (→ P. 2-10).

Check the image using VB-C500 Viewer (→ P. 2-13).

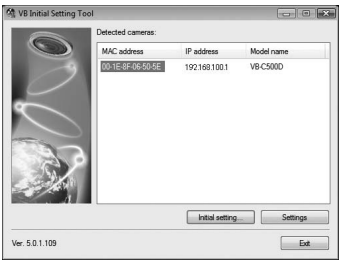

VB Initial Setting Tool window

VB-C500 Viewer

Step 4 Install the camera

Install the VB-C500VD/VB-C500D securely (→ P. 2-15).

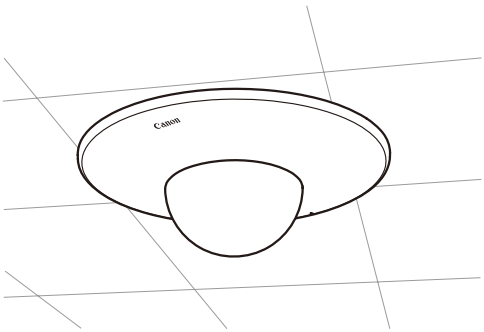

Install the Necessary Software

First, install the necessary software from the bundled Setup CD-ROM (→ P. 1-5).

Software for Initial Setting and Management of the Camera

Type	Overview
VB Initial Setting Tool	This software is used to configure initial camera settings (→P. 2-10). Users other than Administrators need not install this tool.
VBAdmin Tools	This software is used to manage the camera. (→ Chapter 2 in *Operation Guide*). Users other than Administrators need not install this tool.

⇨ Install it by executing VBToolsInstall.exe in the APPLICATIONS folder of Setup CD-ROM.

Recording Software

Type	Overview
Network Video Recording Software RM-Lite	This software is used to display and record video captured by the camera. It consists of **Storage Server** and **Viewer** (→ P. 1-6).

⇨ Install it by executing RMLiteInstall.exe in the APPLICATIONS folder of Setup CD-ROM.

Note

Use RM-Lite Viewer if you want to display MPEG-4 video from the camera.
Only JPEG video can be displayed using the built-in VB-C500 Viewer.

In-Camera Software (Need Not be Installed)

Type	Overview
VB-C500 Viewer	This software is used to display video captured by the camera. The software is already built into the camera and need not be installed (→ P. 1-6).

Install VB Initial Setting Tool, which is required for the inital setting of the camera.

1. Insert Setup CD-ROM bundled with the camera in the CD-ROM drive of the PC, and perform the following procedure.

   (1) After confirming that all other applications have been closed, click the [Start] menu and then select [My Computer].

   (2) Double-click the displayed CD-ROM icon → APPLICATIONS Folder → and then click VBToolsInstall.exe.

2. The initial screen appears. Select an installation method.

   [Easy Installation]: VB Initial Setting Tool and VBAdmin Tools are installed.

   [Custom Installation]: The user can select and install desired software.

3. When the installation is complete, an icon appears on the desktop.

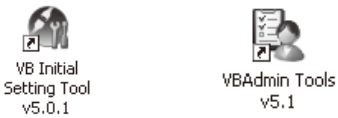

This completes the installation.

Connect the Camera to the Network and Turn On the Power

Here, an example of connecting one camera to a PC via a HUB is explained.

VB-C500VD/VB-C500D has built-in PoE (Power over Ethernet). The power can be supplied to the camera, via a LAN cable, from a PoE HUB conforming to IEEE 802.3af.

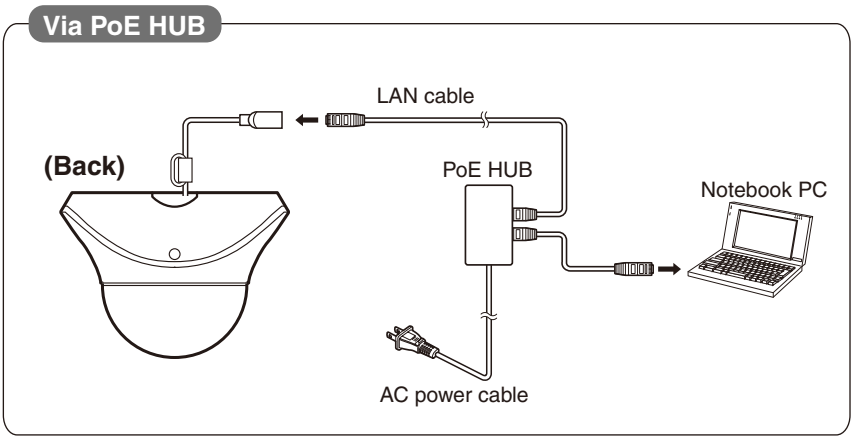

* The figure shows an example using VB-C500D.

If an AC adapter (optional) or external power supply is used, connect it as shown below.

For details, see "Use of External Power Supply" (→ P. 2-9).

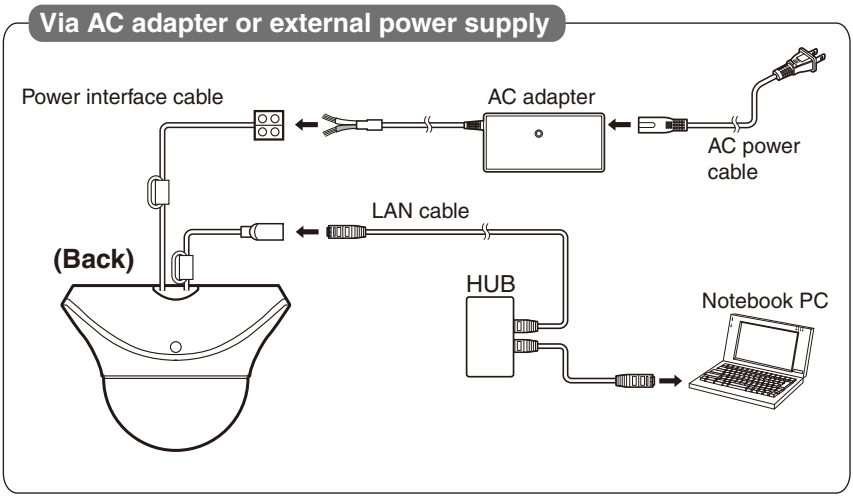

* The figure shows an example of using an AC adapter (optional) with VB-C500D.

Tip

When connecting an optional AC adapter, unplug the connector at the end of the output cable for AC adapter and connect the wires to the power interface cable.
The power interface cable can be connected with no polarity.

This camera has no power switch.

If the power is supplied by the PoE via a LAN cable on the VB-C500VD/VB-C500D, disconnect and connect the LAN cable to the HUB receiving the power, to turn the power [ON]/[OFF].

If an AC adapter (optional) or external power supply is used, disconnect and connect the power plug of the AC adapter (optional) or external power supply, to turn the power [ON]/[OFF].

Note

- For details on PoE HUB and Midspan, check with your Canon sales representative.
- For the operating methods and other details of a PoE HUB or Midspan, see the operation manual or other documentation that comes with the applicable device.
- For the LAN cable connecting the camera and a PoE HUB, use a cable of Category 5 or higher of a length not more than 100 m.
- If the camera is connected to a switching HUB, changing the connection while the camera is operating may disable communication due to the learning function of the HUB. Do not change the connection while the camera is operating.
- An AC adapter (optional) can also be connected to the camera while the power is supplied from a PoE HUB. In this case, the PoE power is given priority while the power is supplied from the PoE HUB and the power from the AC adapter (optional) is not used. Once the PoE power is cut off, the power is automatically supplied from the AC adapter (optional).

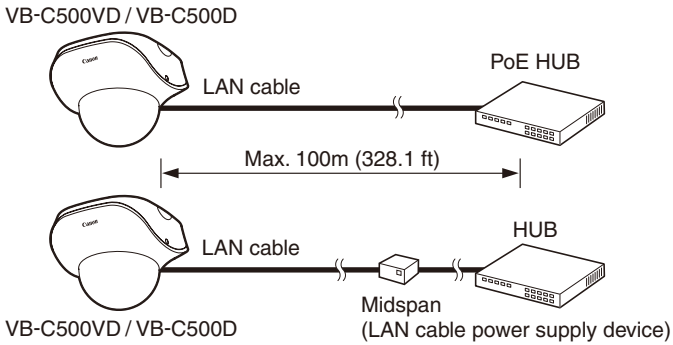

* Midspan (LAN-cable power supply) is a device that supplies power to the camera via a LAN cable, just like a PoE HUB.

Note

When turning off the power and then turning it back on, wait for at least 5 seconds before turning on the power. If the power is turned on too quickly, the camera may not operate correctly. Also, when disconnecting/connecting the power connection, be sure to observe the instructions provided in "Precautions for Use of Optional AC Adapter PA-V17" (→ P. xvi) in "Safety Precautions"

- **The current may be limited for each port depending on the PoE HUB used. However, the camera may not operate correctly when the current is limited. If the camera malfunctions, do not limit the current.**
- **The total current consumption of ports may be limited depending on the PoE HUB used. If multiple ports are used, the ports may not operate correctly. Check the operation manual for the PoE HUB you are using.**

■ Use of External Power Supply

An AC adapter, or 12-VDC or 24-VAC input can be used for the external power supply.
Connect the bundled power interface cable (WP500-VB) as shown below.

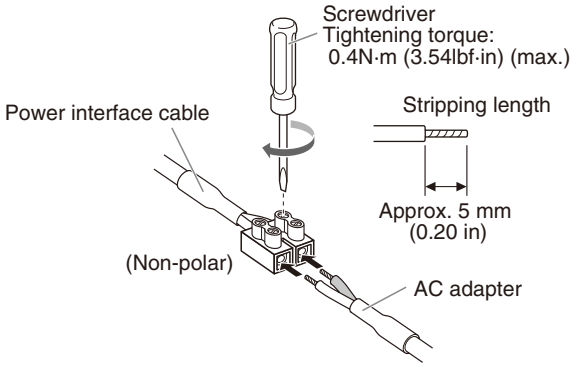

Use a 12-VDC or 24-VAC power supply insulated from 100 VAC.·

12 VDC can be connected in a non-polar condition.

Use the power supply within the following voltage range.

24 VAC:	Voltage fluctuation within 24 VAC±10% (50 or 60 Hz within ± 0.5 Hz) Current supply capacity per camera 0.23 A
12 VDC:	Voltage fluctuation within 12 VDC±10% Current supply capacity per camera 0.36 A

* If a 12-VDC battery power supply is used, be sure to connect a resistor of 0.5 to 1.0Ω/20 W or more to the power line.
* Use double-insulated devices for the external power supply.

Applicable wires and recommended power cable length

Applicable cable (AWG) Conductor size (Φmm, Φinch)	#18 (single wire Φ1.0 mm (Φ0.039 in), stranded wire Φ1.2 mm (Φ0.047 in))	#16 (single wire Φ1.3mm (Φ0.051 in), stranded wire Φ1.6mm (Φ0.063 in))
Maximum cable length, 12 VDC (m (ft))	23 (75.5)	32 (105.0)
Maximum cable length, 24 VAC (m (ft))	46 (150.9)	64 (210.0)
Use a UL cable (UL-1015 or equivalent) for wiring 12 VDC or 24 VAC.		

This completes the network connection.

Perform Initial Setting of the Camera

Set the network for the VB-C500VD/VB-C500D using VB Initial Setting Tool.

1. Launches VB Initial Setting Tool.

   Double-click the [VB Initial Setting Tool] icon on the desktop.

   Alternatively, click the [Start] menu → [Programs] → [WebView Livescope] → [VB Initial Setting Tool].

Double-click the icon on the desktop.

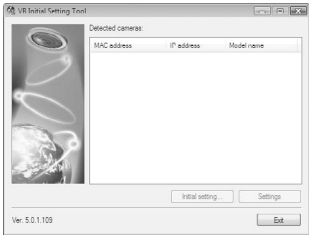

2. VB Initial Setting Tool automatically detects the camera connected to the network, and displays the MAC address, IP address and model name of the camera.

   Click to select the MAC address, and then click the [Initial setting] button.

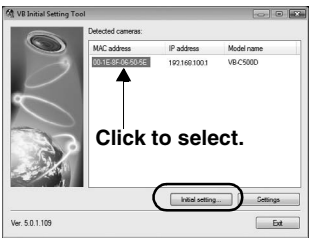

The factory default IP address is as follows.

192.168.100.1

The MAC address is specified on the label attached to the bottom of the camera (→ P. 1-20).

Note that VB Initial Setting Tool cannot exceed the subnet mask.

3. Enter the user name "root" and default password "camera," and then enter the IP address and subnet mask you want to set.

   If the default gateway is not set, clear the [Enter a default gateway address] check box.

   When the setting is complete, click [OK].

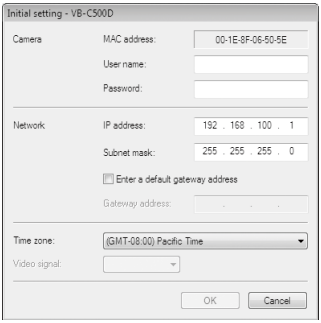

Note

There may be cautionary information that should be heeded depending on your operating environment. Before the initial setting, see "Notes on Operating Environment" (→ P. 1-12).

Tip

- The factory default Administrator password is "camera". Be sure to change the password for security reasons. See "Administrator Password" (→ *Operation Guide*).
- The MAC address of this camera is specified at the bottom of the camera (→ P. 1-20).
- The factory default IP address is 192.168.100.1. Set a proper IP address according to the environment in which the camera is used.
- For the IP address, subnet mask and gateway address to be set, contact your Network Administrator.

4. The progress of setting is displayed in a window.

5. Click [OK].

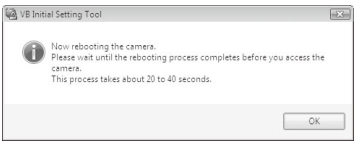

Note

- To obtain an IP address from the DHCP server, first you need to set an address using VB Initial Setting Tool, which enables to communicate with the PC for setting. Then, change the [IP Address Setting] for LAN to [Auto (DHCP)] in [Network] in the Setting page. See "LAN" (→ *Operation Guide*).
- The camera will stop issuing IP address assignment requests in 20 minutes after its power is turned on, upon which detection by VB Initial Setting Tool will be disabled. In this case, turn on the camera again.

This completes the initial setting.

Check the Video Captured by the Camera

When the initial setting is complete, check the video captured by the camera using VB-C500 Viewer. At this time, set the network options on the PC according to the IP address and subnet mask set in the camera.

1. Click the MAC address of the camera whose operation you want to check, and then click [Settings].

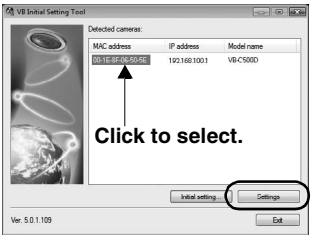

2. The web browser starts and the top page of the camera is displayed. Click [VB Viewer] from [VB-C500 Viewer].

Note

- There may be cautionary information that should be heeded depending on your operating environment. Before the initial setting, refer to "Notes on Operating Environment" (→ P. 1-12).
- To open the setting page using the [Settings] button, do not change the HTTP port of the camera from 80. For information on setting the HTTP port number, see "HTTP Server" (→ *Operation Guide*).

3. The viewer starts and video captured by the camera is displayed.

Note

- Clicking [Setting Page] or [Admin Viewer] on the top page of the camera displays each user authentication window.
  The factory default user name and password are as follows:
  User name: **root** Password: **camera**

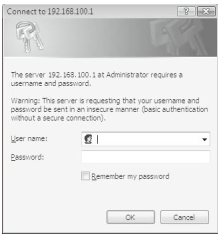

Authentication Window Accessed via Setting Page

Authentication Window Accessed via Admin Viewer

- Be sure to change the administrator password for security reasons. See "Administrator Password" (→ *Operation Guide*).
- To display both JPEG and MPEG-4 video, install and use RM-Lite Viewer (→ P. 1-7).
- Where video can be transmitted to is not limited by the factory settings, etc.
  To use the camera for surveillance purposes, etc., be sure to set the [Access Control] options on the setting page. See "Setting User Access Privileges (Access Control)" (→ *Operation Guide*).

Tip

- For information on how to use VB-C500 Viewer, see *Operation Guide*.
- When [Setting Page] is clicked, various options can be set. See "Accessing the Setting Menu" (→ *Operation Guide*).

This completes the video check process.

Note on Use before Installing the Camera

Be sure to install the camera after setting the IP address (→ P. 2-10).

Note

- The camera will stop issuing IP address assignment requests in 20 minutes after its power is turned on, upon which detection by VB Initial Setting Tool will be disabled. Before installing the camera, set the IP address and check the operation by referring to "Perform Initial Setting of the Camera" (→ P. 2-10).
- The unique MAC address of this camera is specified at the bottom of the camera (→ P. 1-20). It is recommended to write down the MAC address before installing the camera.

Note

For installation or inspection of the VB-C500VD/VB-C500D, consult/request the store where you purchased the product.

- **Wire the VB-C500VD/VB-C500D power supply, network, or other cables safely and securely according to the relevant regulations such as technical standards for electrical installations.**
- **When installing the VB-C500VD/VB-C500D, select a ceiling surface, etc., capable of withstanding the total weight of the camera and all options used (Recessed Mounting Kit), provide sufficient reinforcements and use the bundled safety wire if necessary.**
- **To prevent injuries and equipment damage due to falling items, periodically check the brackets and screws for rusting and loosening.**

- **Do not install the VB-C500VD/VB-C500D to the place with strong vibration.**
- **Do not install the VB-C500VD/VB-C500D on the uneven, inclined, or other unstable surface.**
- **(VB-C500VD) Do not install the network camera to the place where is not strong enough or where is easily affected by vibration. Otherwise, the vandal resistant feature may not be made the best use of.**

Malfunction may result.

Installation Procedure for Direct Mounting on a Ceiling/Wall

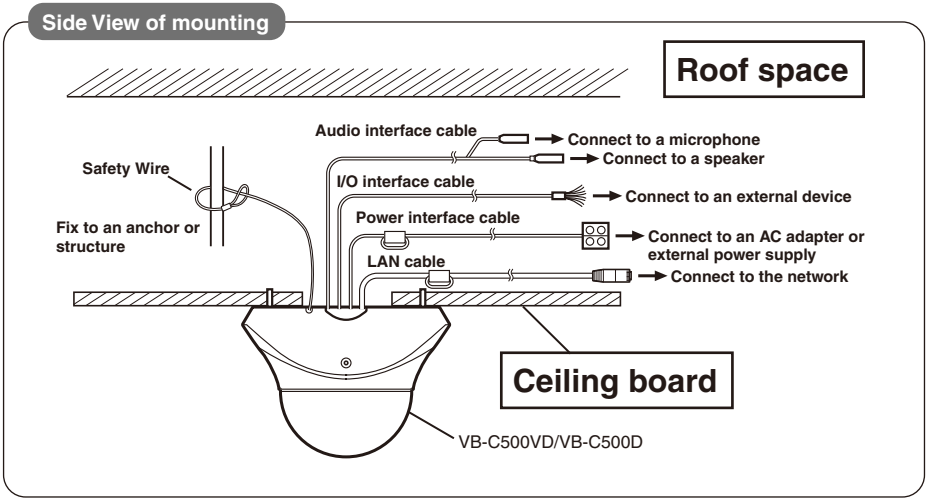

* The figure shows VB-C500D.

1. Use the bundled template to determine the installation position of the camera.

   Confirm the capturing direction of the camera and determine the positions of camera mounting screws, as well as wiring holes if necessary, using the supplied template.

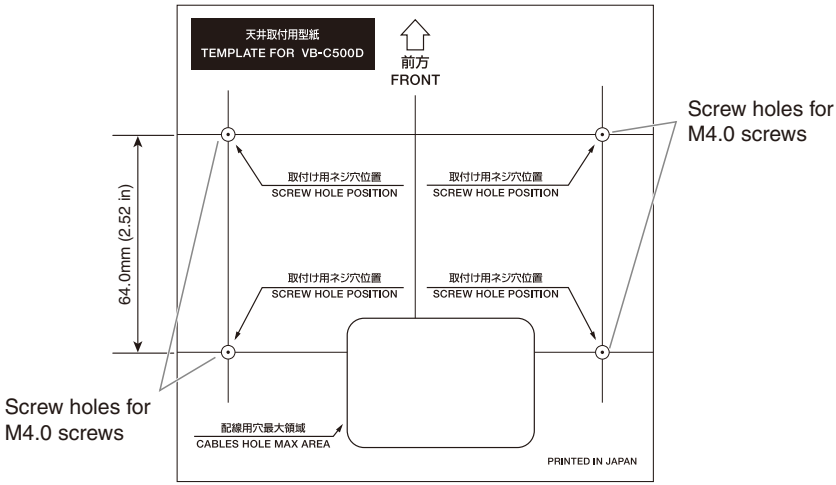

* The figure shows the template for VB-C500D.

2. Remove the dome case.

■ VB-C500VD

Loosen the three dome case lock screws using the bundled dome case lock screw wrench.

■ VB-C500D

Loosen the two dome case lock screws on the side face of the camera. Loosen the screws until they are sticking out.

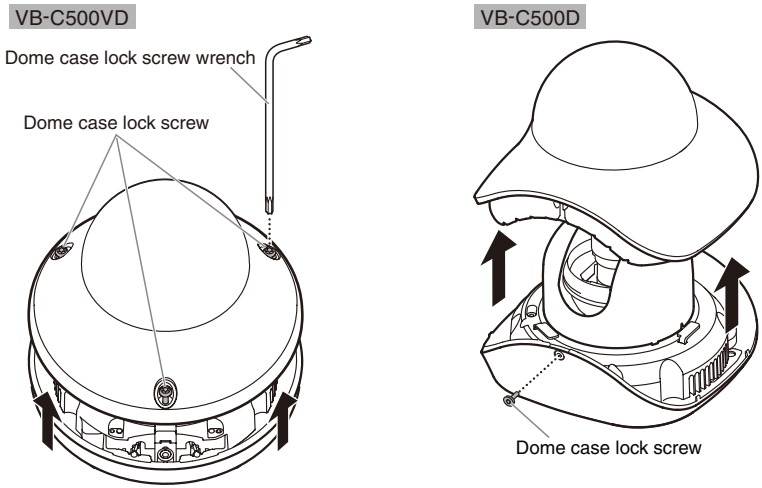

Note

When removing the dome case, be careful not to scratch or dirty the dome.

3. To connect various interface cables (audio, I/O, power), remove the cable cover at the bottom of the camera.

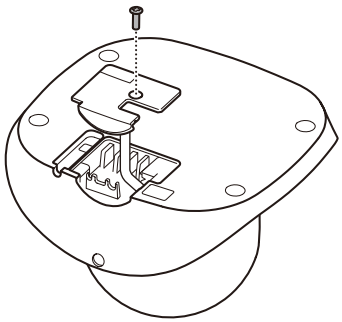

* The figure shows VB-C500D.

4. Affix the safety wire to the camera and also to the installation location (anchor or structure in the ceiling, etc.).

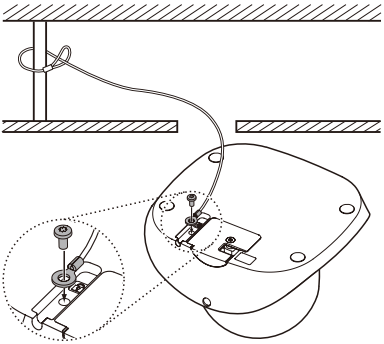

* The figure shows VB-C500D.

Note

The wire direction is different depending on how the camera is installed.

5. Connect each interface cable.

- This process is not required if you don't use any microphone, sensor, AC adapter or external power supply.
- Select an appropriate interface cable according to the external device used, and connect the cable to the camera.
- The interface cables and camera have dedicated connectors and connection terminals, respectively.
- You can select a desired direction from which to take out the interface cables and other wirings.
- For the types of interface cables, see "Optional Items" (→ P. 1-21).

Note

- **When disconnecting/connecting the audio interface cable, I/O interface cable and power interface cable, always do so by holding the connector.**
- **When the audio input/output, external device input/output and external power supply are used, do not use any cable other than the dedicated interface cables. Damage may occur.**

■ VB-C500VD

Concealing the Wiring in a Ceiling

Cut out the tabs on the cable cover. Guide the interface cables through as in the figure below, and affix the cable cover with a screw.

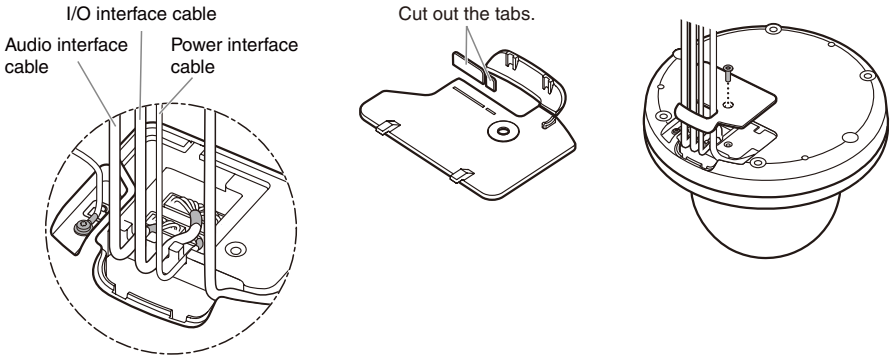

Wiring on a Ceiling

Cut out the tabs and the side face on the cable cover. Guide the interface cables out towards the side face of the camera as in the figure below, and affix the cable cover with a screw.

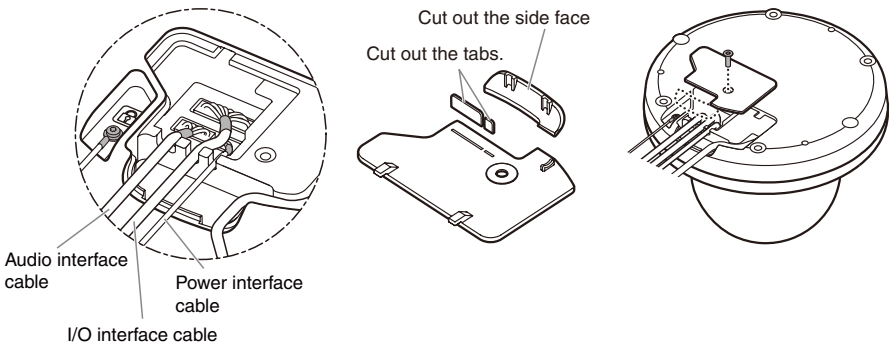

Note

Affix each interface cable in the specified groove, as shown below.
If the cable is not properly installed, it may come off and cause the camera to malfunction.

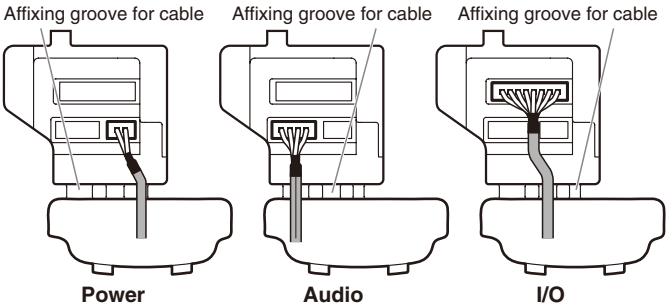

Interface cable fixing method

■ VB-C500D

Concealing the Wiring in a Ceiling

Cut out the tabs. Guide the interface cables through the groove as in the figure below, and affix the cable cover with a screw.

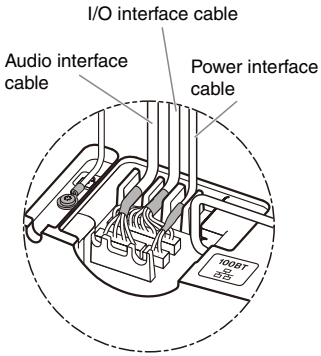

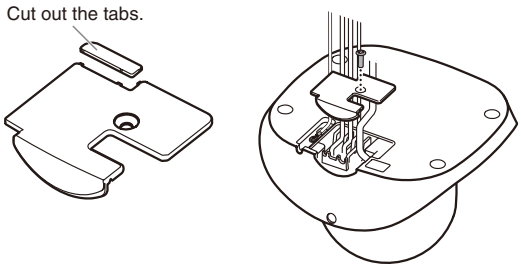

Note

Affix each interface cable in the specified groove, as shown below.
If the cable is not properly installed, it may come off and cause the camera to malfunction.

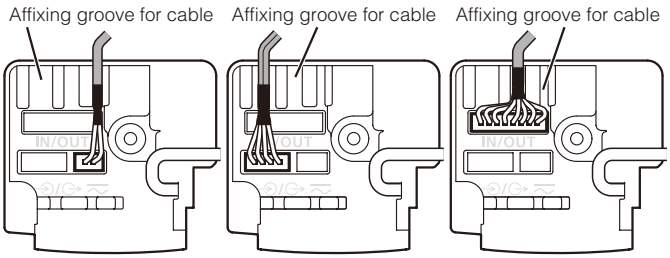

Interface cable fixing method

Wiring on a Ceiling

Cut out the side face of the cable cover with the V-shaped groove. Guide the interface cables out towards the side face of the camera, and affix the cable cover with a screw.

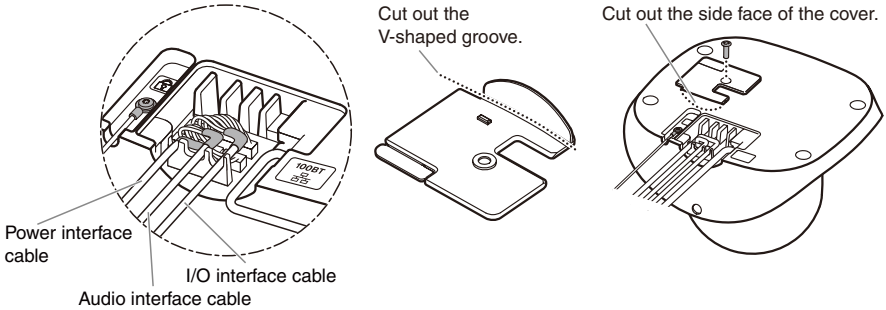

Note

Connect each interface cable to its dedicated terminal and affix it into its specified groove, as shown below.
At this time, make sure the heat-shrinkable tubes that protect the cables rest properly in front of the affixing grooves.

If the cable is not properly installed, it may come off and cause the camera to malfunction.

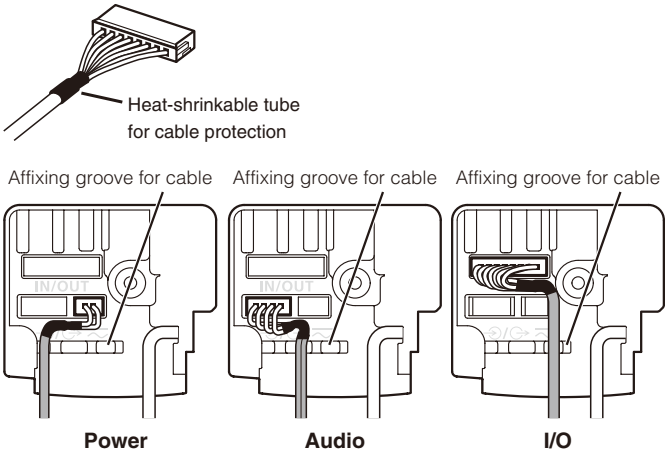

Interface cable fixing method

6. Connect the LAN cable, and also connect each external device using a cable.

   Connect the LAN cable that has been guided through the wiring hole, to the LAN cable on the camera side.

   If necessary, connect the audio, I/O or power interface cable to each external device.

7. Affix the camera on the ceiling.

   Remove the protection sticker from four camera mounting screw holes on the bottom of the camera. Then, align the camera mounting screw wholes to the position marked in step 1 to affix the camera.

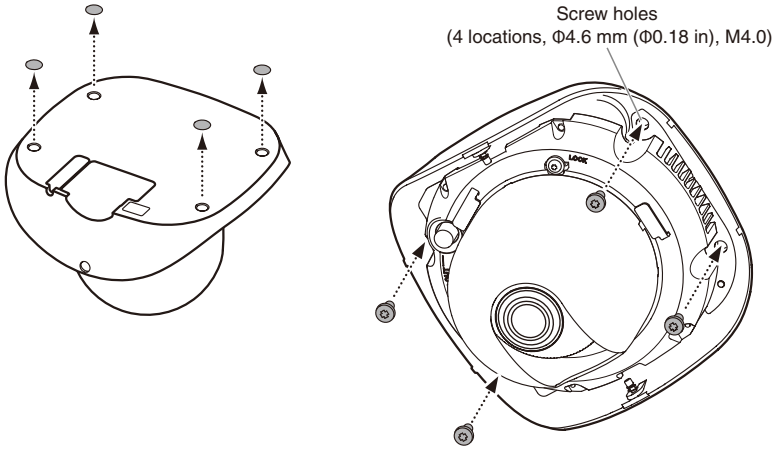

* The figure shows VB-C500D.

8. Push the inner cover in the direction of the arrow, as shown below, to remove the cover.

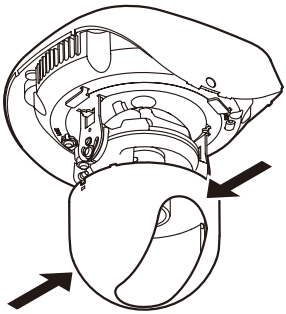

* The figure shows VB-C500D.

9. Adjust the camera angle.

Push the inner cover in the direction of the arrow, as shown below, to remove the cover.

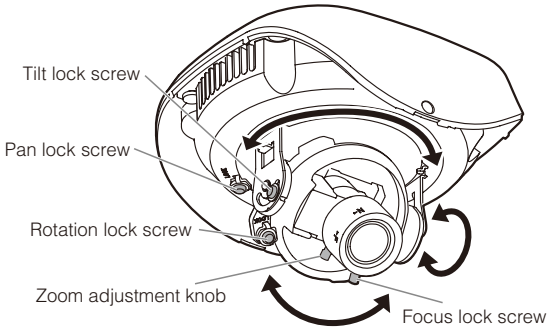

* The figure shows VB-C500D.

10. Adjust the camera focus.

Loosen the zoom lock screw and focus lock screw, and adjust the viewing angle.

Adjust the zoom by moving the zoom adjustment knob and part A in the figure below at the same time.

Adjust the focus by moving the focus ring.

When all adjustments are complete, tighten the zoom lock screw and focus lock screw to lock the focus and viewing angle.

* The zoom lock screw operation applies to VB-C500VD only.

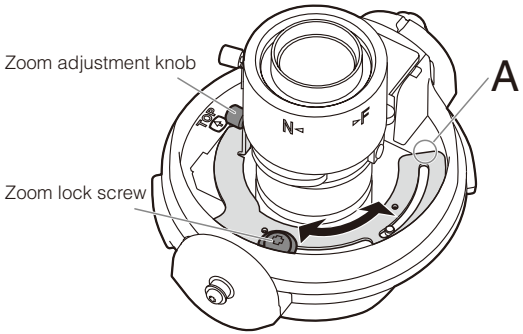

■ Focus Adjustment Method

To adjust the focus, press the reset switch to enter the installation mode. Accurate focus adjustment can be performed in the installation mode. Also note that video output is enabled in the installation mode.

Procedure

- So you can check the camera image, connect a monitor to the video output or otherwise display image on the PC via a LAN. See Step 3: "Check the Video Captured by the Camera".
- Next, press the reset switch and adjust the focus.
- Once the focus has been adjusted, turn off the power and then turn it back on, or reboot the camera from the setting page, to end the installation mode.

Take note that the installation mode ends automatically after 30 minutes. If you want to continue with the focus adjustment, press the reset switch again.

Note

When the lens is used in the telephoto mode, focus change may become conspicuous if the dome case is installed. In this case, you can prevent out-of-focus by adjusting the focus to a point closer than the target subject.

Tip

- Image from the network is disconnected when you switch to the installation mode (when the reset switch is pressed) or return to a normal mode from the installation mode.
- In the installation mode, the camera cannot be controlled.
- Only NTSC is supported for video output.
- The LED remains lit in the installation mode, and a white square is shown on the bottom left of the screen.

11. Install the inner cover.

■ VB-C500VD

Remove the damper lock plate.

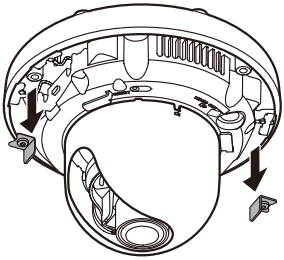

12. Place the dome case on the camera, and affix it by tightening the dome case lock screws.

Installation Procedure for In-Ceiling with a Ceiling/Wall

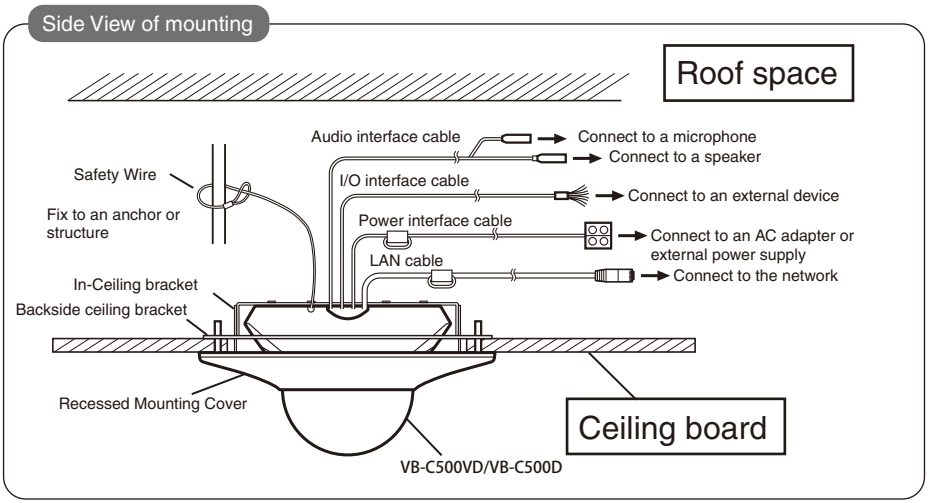

* The figure shows VB-C500D.

To install the camera inserted into a ceiling/wall, use an Recessed Mounting Kit SR500-S-VB (optional). Assemble the in-ceiling bracket before installation.

See Recessed Mounting Kit SR-500-S-VB Assembly Instructions, which is supplied with the Recessed Mounting Kit, for assembly instructions.

1. Install the camera to the assembled in-ceiling bracket using four screws.

   Make sure the interface cables are passed through in the direction of the opening in the in-ceiling bracket, as in the figure below. Use the screws supplied with the Recessed Mounting Kit to install the camera.

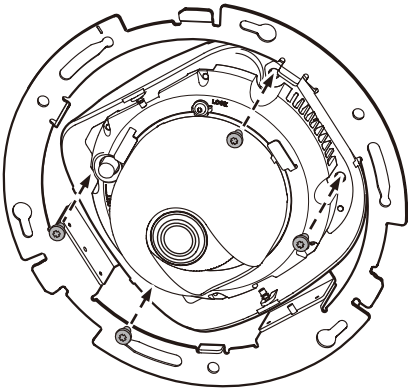

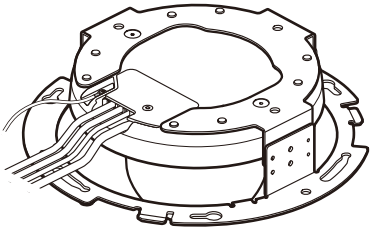

* The figure shows VB-C500D.

2. Use the In-Ceiling Template supplied with the Recessed Mounting Kit to determine the installation position of the camera.

   Confirm the camera angle, and then use the supplied template to open screw holes for the Backside Ceiling Bracket and in-ceiling bracket.

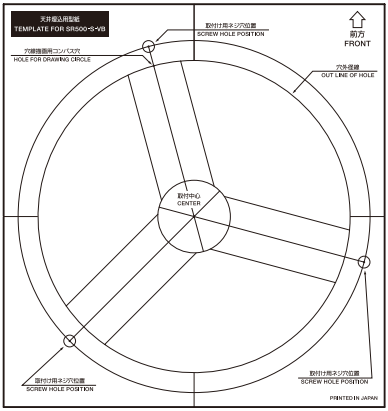

3. Install the Backside Ceiling Brackets at the back of the ceiling/wall and secure it with screws.

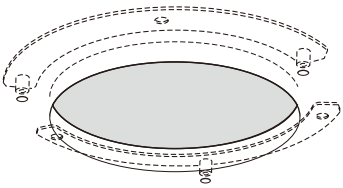

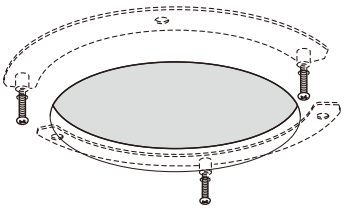

4. Connect the Safety Wire, necessary interface cables and LAN cable, and also connect each external device with a cable, by following steps 4 to 6 of "Installation Procedure for Direct Mounting on a Ceiling/Wall".

5. Affix the assembled in-ceiling bracket assembled with the camera, on the installation surface.

   Hook the assembled in-ceiling bracket on the screws that were loosely secured in step 3, turn the bracket clockwise, and securely tighten (affix) the screws.

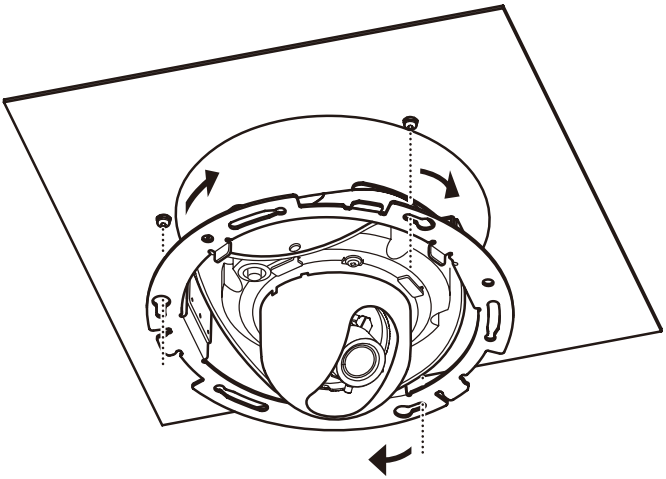

* The figure shows VB-C500D.

6. Adjust the camera angle and focus in the same manner as in steps 8 to 12 of "Installation Procedure for Direct Mounting on a Ceiling/Wall", and install the dome case.

   ■VB-C500VD

   Remove the damper lock plate before installing the dome case.

7. Install the recessed mounting cover.

   Align the mark (O) on the recessed mounting cover with the mark (I) on the in-ceiling bracket, and turn the cover clockwise up until the mark (I) on the recessed mounting cover to affix the bracket in position.

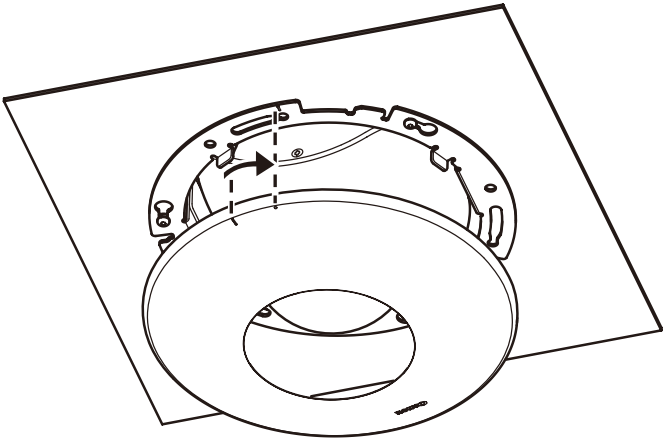

* The figure shows VB-C500D.

This completes the installation.

3

Appendix

This section explains the external dimensions, specifications, external device input/output terminals, audio input/output terminals, etc.

VB-C500VD

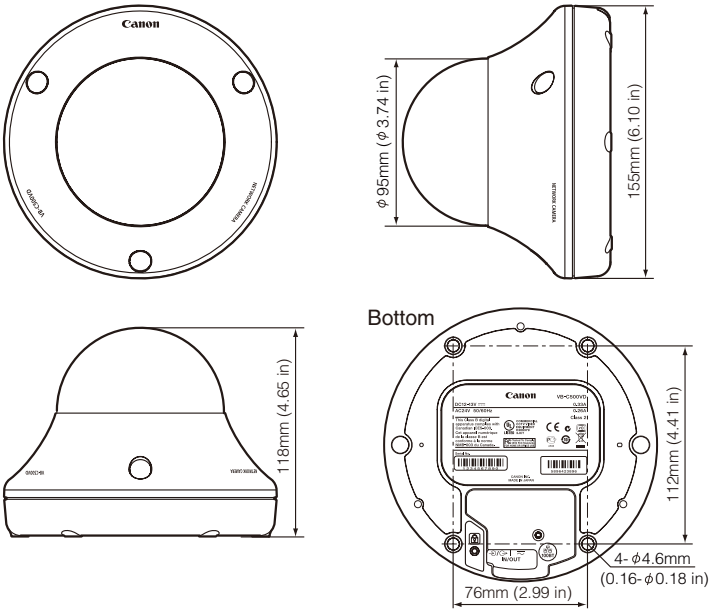
Canon
φ95mm (φ3.74 in)
155mm (6.10 in)
118mm (4.65 in)
Bottom
112mm (4.41 in)
4- φ4.6mm
(0.16- φ0.18 in)
76mm (2.99 in)

VB-C500VD/VB-C500D

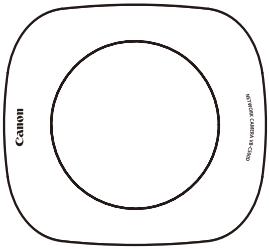

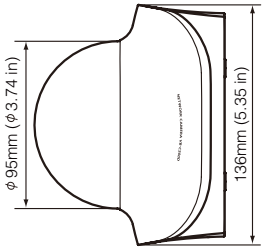

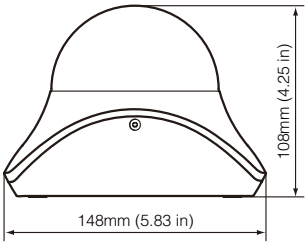

Bottom

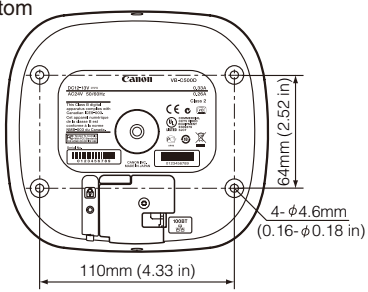

Recessed Mounting Kit SR500-S-VB (Option)

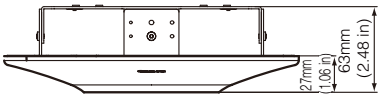

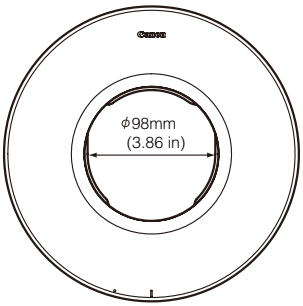

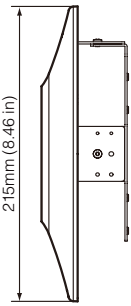

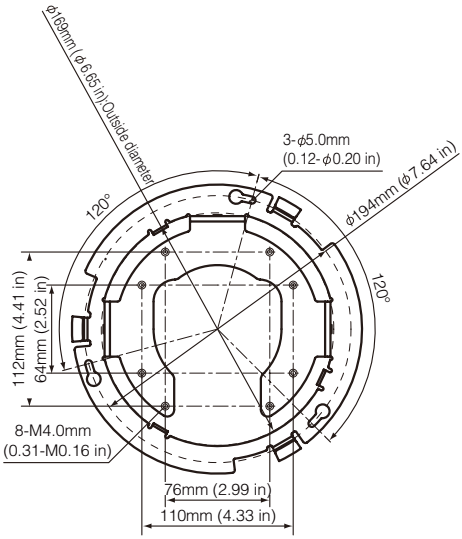

Main Specifications

VB-C500VD/VB-C500D		
Camera	Image sensor	1/4-inch CCD (primary color filter)
	Number of pixels	Effective pixels: 330,000 pixels
	Scanning method	Progressive scan
	Lens	Varifocal lens: Optical 2.4x zoom lens (digital 4x)
	Focal length	f=2.6 to 6.2mm
	F-value	F1.1 (W) to F1.4 (T)
	Viewing angle	Horizontal viewing angle: 82° (W) to 34° (T) Vertical viewing angle: 60.5° (W) to 25.5° (T)
	Day/night capability	Auto/manual switching
	Minimum subject illumination	Day mode : 0.2 lux (F1.1, color, 1/30 second, Smart Shade Control: ON / level 7) *0.5 lux when the Smart Shade Control is turned off Night mode : 0.1 lux (F1.1, black & white, 1/30 second, Smart Shade Control: ON / level 7) *0.2 lux when the Smart Shade Control is turned off
	Focus	Manual
	Focal range	0.7 m (2.3 ft) proximity to ~∞ * Common to Day/Night modes
	Shutter speed	1/1 to 1/8000 second
	AE	Auto, flickerless, shutter speed (12 levels from 1/8 to 1/8000 seconds)
	White balance	Auto/light source/lock (one-shot WB)
	Metering mode	Selectable from 3 modes (Center-weighted/Average/Spot)
	Exposure compensation	7 levels
	Smart Shade Control	7 levels (Function to control dark areas when the video has brightness difference)
	Pan angle range	350° (±175°)
	Tilt angle range	150° (±75°)
	Rotation angle range	350°
Server	Video compression method	JPEG/MPEG-4 Simultaneous data distribution is possible.
	Video size	JPEG : 640x480/320x240/160x120 (Images of 3 sizes can be distributed simultaneously) MPEG-4 : 640x480/320x240 (Fixed to 1 size)
	Video quality	JPEG/MPEG-4: 5 levels (With JPEG, a desired level can be set for each size.)
	Frame rate	JPEG : 30 to 0.1 fps MPEG-4 : 30/15/10 fps
	Maximum frame rate	JPEG : Max. 30 fps (640x480)*1 MPEG-4 : Max. 30 fps (640x480)*1
	Number of clients that can be connected simultaneously	Up to 30 clients (MPEG-4: Up to 10 clients)
	Audio compression method	G.711μ-law (64 kbps)
	Audio communication mode	Full duplex (two-way communication)
	Audio playback	O (Audio files can be played on the occurrence of a motion detection event or an external device input event.)*2
	Protocol	IPv4 : TCP/IP, UDP, HTTP, FTP, SNMP (MIB2), SMTP (client), DHCP (client), DNS (client), ARP, ICMP, POP3, NTP, SMTP authentication, WV-HTTP (Canon's original protocol) IPv6 : TCP/IP, UDP, HTTP, FTP, SMTP (client), DNS (client), ICMPv6, POP3, NTP, SMTP authentication, WV-HTTP (Canon's original protocol)
	IPsec	O
	Camera control	3 user levels can be set (Administrator/Authorized Users/Guest Users). User names and passwords for up to 50 users can be registered.
	Connection restriction	Access restriction (user name and password)/IP address restriction (IPv4)/ Restriction on number of clients that can connect simultaneously
	Motion Detection	O (Up to four detection areas can be set in the shooting window.)
	JPEG image upload	FTP/HTTP/SMTP (e-mail) Temporary camera memory for upload: Max. approx. 4MB, Frame rate: max 10 fps.
	Event notification	HTTP/SMTP (e-mail)

*1 Note that the frame rate may drop depending on the performance of the viewer PC, number of clients connected at the same time, network load, etc.

*2 An optional speaker with amplifier is required to play audio.

- The specifications are subject to change without notice for purposes of improvement, etc.

VB-C500VD/VB-C500D		
Interface	Network terminal	LAN-1 (RJ45, 100Base-TX (Auto/Full Duplex/Half Duplex))
	Audio input terminal (Used as both LINE IN and MIC IN)	Φ3.5 monaural mini jack connector * Connection via an audio interface cable LINE IN x1 (connected to a microphone with amplifier) or MIC INx 1 (connected to a microphone without amplifier) (LINE IN and MIC IN can be switched on the setting page)
	Audio output terminal (LINE OUT)	Φ3.5 monaural mini jack connector * Connection via an audio interface cable LINE OUT-1 (connected to a speaker with amplifier)
	External device input/output terminals	Input-2 Output-2 * Connection via an I/O interface cable
Others	Operating environment	Temperature: -10 to 50°C Humidity: 20 to 85% RH (non-condensing)
	Power supply	PoE: Supporting PoE power supply via a LAN connector (conforming to the IEEE 802.3af standard) Dedicated AC adapter: Supporting optional PA-V17 (100 VAC) * Connection via a power interface cable (non-polar) External power supply: Supporting 24 VAC/12 VDC * Connection via a power interface cable (non-polar)
	Power consumption	When PoE is used: approx. 3.3 W max. Dedicated AC adapter PA-V17 used: approx. max 3.6 W.

*1 Note that the frame rate may drop depending on the performance of the viewer PC, number of clients connected at the same time, network load, etc.

*2 An optional speaker with amplifier is required to play audio.

- The specifications are subject to change without notice for purposes of improvement, etc.

	VB-C500VD	VB-C500D
Dimensions	155mm x 155mm x 118mm (6.10 in x 6.10 in x 4.65 in) (W x D x H)	136mm x 148mm x 108mm (5.35 in x 5.83 in x 4.25 in) (W x D x H)
Weight	Approx. 780 g (1.72 lb)	Approx. 640 g (1.411 lb)
Shock resistance specifications	Exterior materials: alloyed aluminum, polycarbonate plastics shock absorbing mechanism Estimated shock resistant: 50J (impact strength) * Based on Canon's test method	None

AC adapter (option)	
Model	PA-V17
Input	100 VAC, 50/60 Hz
Output	13 VDC, 1.8 A (max.), temperature -10°C to 35°C, humidity 20 to 85% RH (non-condensing) When combined with the network camera 13 VDC, 1.0A (max.), temperature -10°C to 45°C, humidity 20 to 85% RH (non-condensing)
Polarity	Black line side (-), white line side (+)
Dimensions	58 mm x 118 mm x 25 mm (2.28 in x 4.65 in x 0.98 in) (W x D x H) (excluding projections)
Weight	Approx. 215 g (0.474 lb) (excluding cables)

Recessed Mounting Kit (option)	
Model	SR500-S-VB
Type	Silver
Use environment when combined with the camera	Temperature -10 to 50°C, humidity 20 to 85% RH (non-condensing)
Dimensions	Φ215mm x 63mm (H) (Φ8.46 in x 2.48 in (H)) (including brackets)
Weight	Approx. 395 g (0.871 lb) (including Recessed Mounting Cover and brackets) * Cover only: Approx. 66 g (0.146 lb)

- The specifications are subject to change without notice for purposes of improvement, etc.

Input/Output Terminals

The various input/output terminals of the camera are located inside the cable cover at the bottom of the camera.

To connect the camera to an audio input/output device, contact input/output device, AC adapter or external power supply, use dedicated interface cables. All interface cables come with dedicated terminals for connection with the camera. Check the shape of each terminal thoroughly and insert the terminal in the correct direction.

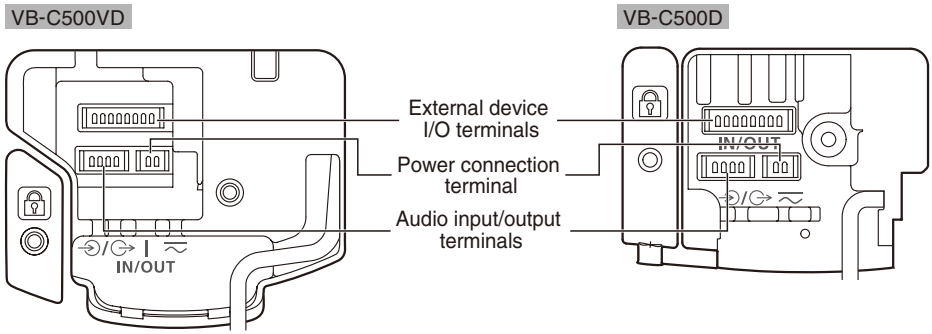

External Device I/O Terminals

Two external device input terminals and two external device output terminals are available.

VB-C500 Viewer and RM-Lite Viewer can be used to check the conditions of external device inputs and operate external device outputs. ("Operating the External Device Outputs" and "Displaying the External Device Input Status" in *Operation Guide*).

To connect the camera to an external device, use a dedicated I/O interface cable WC500-VB. (→ P. 1-22)

The table below lists the colors and functions of spare wires in the I/O interface cable.

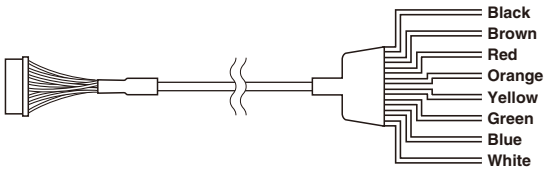

	Color of spare wire	Type of corresponding terminal
1	Black	OUT2_B
2	Brown	OUT2_A
3	Red	OUT1_B
4	Orange	OUT1_A

	Color of spare wire	Type of corresponding terminal
5	Yellow	IN2_-
6	Green	IN2_+
7	Blue	IN1_-
8	White	IN1_+

■ External Device Input Terminals (IN1, IN2)

There are two sets of external device input terminals (IN1, IN2), where each set consists of two terminals. The - terminals are connected to the GND in the camera. Two-wire cables are connected to the + and - terminals to achieve electrical continuity or insulation between the two terminals for notification to the viewer.

Note

For the sensors and switches to be connected, connect terminals that are electrically isolated from each power supply or GND.

■ External Device Output Terminals (OUT1, OUT2)

There are two sets of external device output terminals (OUT1, OUT2), where each set consists of two terminals. Each terminal set has no polarity. The condition between the two terminals can be switched between connected and disconnected by controlling from the viewer. The output terminals are isolated from the internal circuits of the camera using optical couplers.

The loads connected to the output terminals should be used within the following ratings:

Ratings between output terminals: Maximum voltage 50 VDC

Continuous load current 100 mA max.

■ Internal Connection Diagram

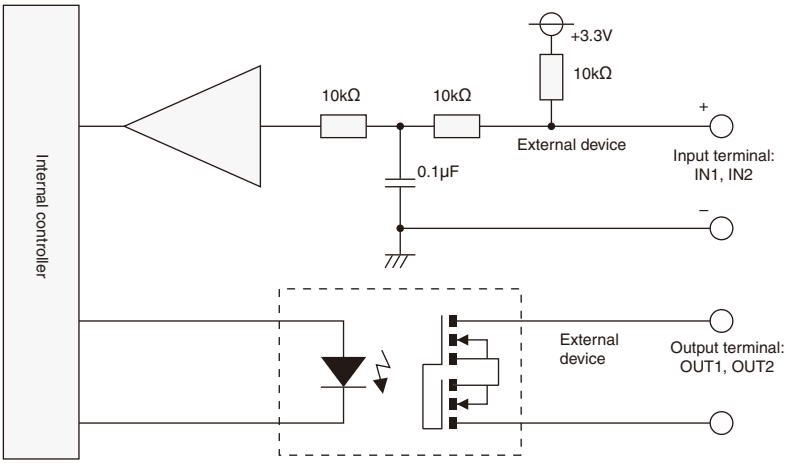

Tip

Applicable wire for external device cable

Single wire of AWG No. 28 to 22

Conductor size Φ0.32 to 0.65 mm (Φ0.013 to 0.026 in)

Strip the cable by approx. 8 to 9 mm (0.31 to 0.35 in)

Audio Input/Output Terminals

One audio input terminal and one audio output terminal is available.

A microphone, speaker with amplifier or other audio input/output device can be connected to the camera to send/receive sound via the viewer.

To connect the camera to an audio input/output device, use a dedicated audio interface cable WA500-VB.(→ P. 1-21)

Use a Φ3.5 monaural mini jack connector to connect the audio interface cable and audio input/output device.

■ Audio Input, Used as Both LINE IN and MIC IN (Monaural Input)

Connects the camera to a microphone. As for audio input of this camera, two types of microphones, LINE IN and MIC IN types, are supported. Note that the camera only has one audio input. Switch the input mode on the Setting page ("Audio Input" in *Operation Guide*). The factory setting is LINE IN.

When LINE IN is selected, a microphone with amplifier can be connected.

When MIC IN is selected, a dynamic microphone or capacitor microphone can be connected.

Input terminal: Φ3.5-mm mini jack (monaural)

- Dynamic MIC IN setting
  Input impedance: 1.75 kΩ± 20%

  * Supported microphone
    Output impedance: 400Ω ~ 600Ω

- Capacitor MIC IN setting
  Input impedance (microphone bias resistance): 2.2 kΩ± 20%

  Microphone power supply: Plug-in power (voltage: 1.8 V) method

  *Supported microphone
    Capacitor microphone of plug-in power type

- LINE IN setting
  Input level: 1 Vp-p max.

  * Use a microphone with amplifier.

■ Audio Output Terminal LINE OUT (Monaural Output)

Connects the camera to an amplifier with speaker. Audio can be sent from RM-Lite Viewer to a speaker. Only the administrator can use this function.

Output terminal: Φ3.5-mm mini jack (monaural)

- Output level: 1 Vp-p max.

  * Use a speaker with amplifier.

Note

- Switch the LINE IN/MIC IN setting on the Setting page according to the microphone specification. See "Audio Input" (→ *Operation Guide*).
  If a wrong input is used, the camera or microphone may be damaged. Be sure to set the correct input.
- The volume, sound quality, etc., may change depending on the characteristics of the microphone used.
- To send audio to speaker, use RM-Lite Viewer. Audio cannot be sent from VB-C500 Viewer (→ P. 1-9).
- Video and audio may sometimes lose synchronism.
- Audio may be interrupted depending on the performance of the PC used or the network environment.
- Video and audio can be transmitted to a maximum of 30 clients. If there are too many clients, audio may be interrupted.
- If anti-virus software is used, audio may be interrupted.
- Disconnecting/connecting the LAN cable interrupts the audio. Accordingly, reconnect the LAN connection on the viewer side.

Canon

CANON INC.

30-2, Shimomaruko 3-chome, Ohta-ku, Tokyo 146-8501, Japan

CANON U.S.A.,INC.

One Canon Plaza Lake Success, NY 11042-1198 USA

- **If you have any questions, call the CANON U.S.A. Information Center toll-free at 1-800-828-4040 (U.S.A. only)**

CANON CANADA INC. NATIONAL HEADQUARTERS

6390 Dixie Road, Mississauga, Ontario L5T 1P7

CANON CANADA INC. CALGARY

2828, 16th Street, N.E, Calgary, Alberta T2E 7K7

CANON CANADA INC. MONTRÉAL

8801 Trans Canada Hwy, St. Laurent Québec H4S 1Z6

- **If you have any questions, call the CANON CANADA Customer Information Centre toll-free at 1-800-OK-CANON (652-2666) (Canada only)**

CANON MEXICANA, S. DE R.L.DE C.V.

Boulevard Manuel Avila Camacho, No. 138 PB, Pisos 15, 16 y 17

Col Lomas de Chapultepec C.P. 11000 México, D.F. México

CANON SINGAPORE PTE. LTD.

1 HarbourFront Avenue, #04-01, Keppel Bay Tower Singapore 098632

CANON HONGKONG CO., LTD.

19/F., The Metropolis Tower, 10 Metropolis Drive, Hunghom, Kowloon, Hong Kong

CANON AUSTRALIA PTY.LTD.

1 Thomas Holt Drive, North Ryde, Sydney, N.S.W. 2113, Australia

CANON EUROPA N.V.

Bovenkerkerweg 59-61, P.O. Box 2262, 1185 XB Amstelveen, The Netherlands

CANON EUROPE LTD.

6 Roundwood Avenue, Stockley Park, Uxbridge Middlesex, UB11 1JA, United Kingdom

CANON COMMUNICATION & IMAGE FRANCE

12 Rue De L'Industrie, 92414 Corbevoie, Cedex, France

CANON (UK) LTD.

Woodhatch, Reigate, Surrey RH2 8BF, United Kingdom

CANON DEUTSCHLAND GmbH

Europark Fichtenhain A 10, 47807 Krefeld, Germany

CANON ITALIA S.p.A.

Via Milano, 8 San Donato M. se-20097 (MI), Italy

CANON (Schweiz) A.G.

Industriestrasse 12, 8305 Dietlikon, Switzerland

CANON BELGIUM N.V./S.A

Berkenlaan 3, 1831 Diegem (Mechelen), Belgium

CANON GmbH

Zetschegasse 11, A-1230 Wien, Austria

CANON ESPAÑA,S.A.

Avda. de Europa, 6 Alcobendas, 28108 Madrid, Spain

CANON SVENSKA AB

Gustav III:s, Boulevard 26, 169 88 Solna, Sweden

CANON NORGE A/S

Hallagerbakken 110, P.O. Box 33, Holmlia, N-1201 Oslo, Norway

CANON OY

Huopalahdentie 24, P.O. Box 1, FIN-00351 Helsinki, Finland

CANON DANMARK A/S

Knud Hoejgaards Vej 1, DK-2860, Soeborg, Denmark

PUB.YT1-1421-001

© CANON INC. 2009