Canon

G1030 series

Online Manual

English

Contents

Using Online Manual. 7

Symbols Used in This Document. 8

Touch-enabled Device Users (Windows). 9

Trademarks and Licenses. 10

Trademarks. 11

Licenses. 12

Handling Paper, Ink Tanks, etc.. 32

Loading Paper. 33

Loading Photo Paper / Plain Paper. 34

Loading Envelopes. 38

Refilling Ink Tanks. 42

Refilling Ink Tanks. 43

Checking Ink Level. 49

Ink Tips. 50

If Printing Is Faint or Uneven. 51

Maintenance Procedure. 52

Printing the Nozzle Check Pattern. 54

Examining the Nozzle Check Pattern. 55

Cleaning the Print Head. 56

Performing Maintenance Functions from Your Computer (macOS). 57

Opening Remote UI for Maintenance. 58

Cleaning the Print Heads. 59

Adjusting Print Head Position. 61

Cleaning. 62

Cleaning Paper Feed Rollers. 63

Cleaning Inside the Printer (Bottom Plate Cleaning). 65

Replacing the Maintenance Cartridge. 67

Overview. 70

Safety. 71

Safety Precautions. 72

Regulatory Information. 75
WEEE. 77
Handling Precautions. 88
Legal Restrictions on Printing. 89
Printer Handling Precautions. 90
Transporting Your Printer. 91
When Repairing, Lending, or Disposing of the Printer. 93
Keeping Print Quality High. 94
Main Components and Their Use. 95
Main Components. 96
Front View. 97
Rear View. 98
Inside View. 99
Operation Panel. 100
Power Supply. 101
Checking that Power Is On. 102
Turning the Printer On and Off. 103
Unplugging the Printer. 105
Changing Settings. 106
Changing Printer Settings from Your Computer (Windows). 107
Changing the Print Options. 108
Setting the Ink to be Used. 109
Managing the Printer Power. 110
Changing the Printer Operation Mode. 112
Changing Printer Settings from Your Computer (macOS). 114
Managing the Printer Power. 115
Changing the Printer Operation Mode. 116
Changing Settings from Operation Panel. 117
Setting Items on Operation Panel. 118
Ink level monitor. 119
Checking the Total Number of Uses of Printer. 120
Initializing Printer Settings. 121
Specifications. 122
Information about Paper. 124

Supported Media Types. 125
Paper Load Limit. 128
Unsupported Media Types. 130
Handling Paper. 131
Economy Mode. 132
Printing. 133
Printing from Computer. 134
Printing from Application Software (Windows Printer Driver). 135
Basic Printing Setup. 136
Main Controls (Basic Settings Tab). 138
Basic Settings Tab Description. 139
Paper Settings on the Printer Driver. 147
Printing on Postcards. 149
Setting Up Envelope Printing. 150
Registering a Frequently Used Printing Profile. 151
Set Media Type, Quality, etc. (Media/Quality Tab). 153
Media/Quality Tab Description. 154
Set the Layout of Printed Documents (Page Setup Tab). 158
Page Setup Tab Description. 159
Setting the Number of Copies and Printing Order. 171
Perform Borderless Printing. 173
Page Layout Printing. 175
Duplex Printing. 176
Overview of the Printer Driver. 177
Canon IJ Printer Driver. 178
Opening Printer Driver's Setup Screen. 179
Canon IJ Status Monitor. 180
Instructions for Use (Printer Driver). 181
Maintenance Tab Description. 183
Canon IJ Status Monitor Description. 186
Updating the Driver. 189
Printing from Application Software (macOS). 191
Printing. 192

Printing on Postcards. 195
How to Open Printer Settings Screen. 196
Displaying the Printing Status Screen. 197
Deleting the Undesired Print Job. 198
Removing Printer That Is No Longer Required from List of Printers. 199
Printing Using Canon Application Software. 200
Paper Settings. 201
Frequently Asked Questions. 203
Printing Problems. 205
Printer Does Not Print. 206
Printer Does Not Pick Up or Feed the Paper/"No Paper" Error. 208
Printout (Copy) Results Are Unsatisfactory. 211
Ink Does Not Come Out/Blurry or Fuzzy/Inaccurate or Bleeding Colors/Streaks. 214
Lines Are Misaligned/Distorted. 216
Paper Is Smudged/Printed Surface Is Scratched/Ink Blots/Paper Curl. 217
Vertical Line Next to Image. 220
Images Incomplete/Cannot Complete Printing. 221
Lines Incomplete or Missing (Windows). 222
Back of Paper Is Smudged. 223
Uneven or Streaked Colors. 224
Change to Offline (Windows). 225
Mechanical Problems. 227
Printer Does Not Turn On. 228
Printer Turns Off Unexpectedly or Repeatedly. 229
USB Connection Problems. 230
Installation and Download Problems. 232
Failed to MP Drivers (Printer Driver) Installation (Windows). 233
Cannot Proceed Beyond Printer Connection Screen (Cannot Find Printer Connected via USB). 234
Errors and Messages. 236
When Error Occurred. 237
Message Is Displayed. 239
List of Support Codes for Printer Errors. 241
What to Do When Paper Is Jammed. 245

Removing Jammed Paper inside Printer. 248
1000. 252
1200. 253
1368. 254
1496. 255
1640. 256
1723. 257
1724. 258
1725. 259
1726. 260
1727. 261
2114. 262
2116. 263
2200. 264
3252. 265
4103. 266
5100. 267
5200. 268
6000. 269

Using Online Manual

- Operating Environment
- Symbols Used in This Document
- Touch-enabled Device Users (Windows)
- Printing Online Manual
- Trademarks and Licenses
- Screenshots in This Manual

Symbols Used in This Document

Warning

Instructions that, if ignored, could result in death, serious personal injury, or property damage caused by incorrect operation of the equipment. These must be observed for safe operation.

Caution

Instructions that, if ignored, could result in personal injury or property damage caused by incorrect operation of the equipment. These must be observed for safe operation.

Important

Instructions including important information that must be observed to avoid damage and injury or improper use of the product. Be sure to read these instructions.

Note

Instructions including notes for operation and additional explanations.

Basics

Instructions explaining basic operations of your product.

Note

- Icons may vary depending on your product.

Touch-enabled Device Users (Windows)

For touch actions, you need to replace "right-click" in this document with the action set on the operating system. For example, if the action is set to "press and hold" on your operating system, replace "right-click" with "press and hold."

Trademarks and Licenses

- Trademarks
- Licenses

Trademarks

- Microsoft is a registered trademark of Microsoft Corporation.
- Windows is a trademark or registered trademark of Microsoft Corporation in the U.S. and/or other countries.
- Microsoft Edge and Microsoft Excel are either trademarks or registered trademarks of Microsoft Corporation in the U.S. and/or other countries.
- Internet Explorer is a trademark or registered trademark of Microsoft Corporation in the U.S. and/or other countries.
- Microsoft Store is a trademark or registered trademark of Microsoft Corporation in the U.S. and/or other countries.
- This device incorporates exFAT technology licensed from Microsoft.
- Mac, Mac OS, macOS, OS X, AirPort, App Store, AirPrint, the AirPrint logo, Safari, Bonjour, iPad, iPad Air, iPad mini, iPadOS, iPhone and iPod touch are trademarks of Apple Inc., registered in the U.S. and other countries.
- IOS is a trademark or registered trademark of Cisco in the U.S. and other countries and is used under license.
- Google Cloud Print, Google Chrome, Chrome OS, Chromebook, Android, Google Drive, Google Apps and Google Analytics are either registered trademarks or trademarks of Google Inc. Google Play and Google Play Logo are trademarks of Google LLC.
- Adobe, Acrobat, Flash, Photoshop, Illustrator, Adobe RGB and Adobe RGB (1998) are either registered trademarks or trademarks of Adobe Systems Incorporated in the United States and/or other countries.
- Adobe, Acrobat, Flash, Photoshop, Photoshop Elements, Lightroom, Adobe RGB and Adobe RGB (1998) are either registered trademarks or trademarks of Adobe Systems Incorporated in the United States and/or other countries.
- Amazon, Echo and Alexa are trademarks of Amazon.com, Inc. or its affiliates.
- Google, Google Home, and Android are trademarks of Google LLC.
- LINE is a registered trademark or trademark of LINE Corporation.
- LINE Clova is a registered trademark of LINE Corporation.
- Google Docs, and Google Drive are trademarks of Google LLC.
- App Store is a trademark of Apple Inc., registered in the U.S. and other countries.
- Bluetooth is a trademark of Bluetooth SIG, Inc., U.S.A. and licensed to Canon Inc.
- QR Code is a registered trademark of DENSO WAVE INCORPORATED in Japan and in other countries.
- The Mopria® word mark and the Mopria® Logo are registered and/or unregistered trademarks of Mopria Alliance, Inc. in the United States and other countries. Unauthorized use is strictly prohibited.
- Mozilla Firefox is a trademark or registered trademark of Mozilla Foundation in the U.S. and/or other countries.
- Wi-Fi, WPA, WPA2 and WPA3 are either registered trademarks or trademarks of Wi-Fi Alliance.
- All other company names and products mentioned in this guide may be registered trademarks or trademarks of their respective companies.

Licenses

Copyright (c) 2003-2015 Apple Inc. All rights reserved.

Redistribution and use in source and binary forms, with or without modification, are permitted provided that the following conditions are met:

1. Redistributions of source code must retain the above copyright notice, this list of conditions and the following disclaimer.
2. Redistributions in binary form must reproduce the above copyright notice, this list of conditions and the following disclaimer in the documentation and/or other materials provided with the distribution.
3. Neither the name of Apple Inc. ("Apple") nor the names of its contributors may be used to endorse or promote products derived from this software without specific prior written permission.

THIS SOFTWARE IS PROVIDED BY APPLE AND ITS CONTRIBUTORS "AS IS" AND ANY EXPRESS OR IMPLIED WARRANTIES, INCLUDING, BUT NOT LIMITED TO, THE IMPLIED WARRANTIES OF MERCHANTABILITY AND FITNESS FOR A PARTICULAR PURPOSE ARE DISCLAIMED. IN NO EVENT SHALL APPLE OR ITS CONTRIBUTORS BE LIABLE FOR ANY DIRECT, INDIRECT, INCIDENTAL, SPECIAL, EXEMPLARY, OR CONSEQUENTIAL DAMAGES (INCLUDING, BUT NOT LIMITED TO, PROCUREMENT OF SUBSTITUTE GOODS OR SERVICES; LOSS OF USE, DATA, OR PROFITS; OR BUSINESS INTERRUPTION) HOWEVER CAUSED AND ON ANY THEORY OF LIABILITY, WHETHER IN CONTRACT, STRICT LIABILITY, OR TORT (INCLUDING NEGLIGENCE OR OTHERWISE) ARISING IN ANY WAY OUT OF THE USE OF THIS SOFTWARE, EVEN IF ADVISED OF THE POSSIBILITY OF SUCH DAMAGE.

Apache License

Version 2.0, January 2004

http://www.apache.org/licenses/
TERMS AND CONDITIONS FOR USE, REPRODUCTION, AND DISTRIBUTION

1. Definitions.

   "License" shall mean the terms and conditions for use, reproduction, and distribution as defined by Sections 1 through 9 of this document.

   "Licensor" shall mean the copyright owner or entity authorized by the copyright owner that is granting the License.

   "Legal Entity" shall mean the union of the acting entity and all other entities that control, are controlled by, or are under common control with that entity. For the purposes of this definition, "control" means (i) the power, direct or indirect, to cause the direction or management of such entity, whether by contract or otherwise, or (ii) ownership of fifty percent (50%) or more of the outstanding shares, or (iii) beneficial ownership of such entity.

   "You" (or "Your") shall mean an individual or Legal Entity exercising permissions granted by this License.

   "Source" form shall mean the preferred form for making modifications, including but not limited to software source code, documentation source, and configuration files.

"Object" form shall mean any form resulting from mechanical transformation or translation of a Source form, including but not limited to compiled object code, generated documentation, and conversions to other media types.

"Work" shall mean the work of authorship, whether in Source or Object form, made available under the License, as indicated by a copyright notice that is included in or attached to the work (an example is provided in the Appendix below).

"Derivative Works" shall mean any work, whether in Source or Object form, that is based on (or derived from) the Work and for which the editorial revisions, annotations, elaborations, or other modifications represent, as a whole, an original work of authorship. For the purposes of this License, Derivative Works shall not include works that remain separable from, or merely link (or bind by name) to the interfaces of, the Work and Derivative Works thereof.

"Contribution" shall mean any work of authorship, including the original version of the Work and any modifications or additions to that Work or Derivative Works thereof, that is intentionally submitted to Licensor for inclusion in the Work by the copyright owner or by an individual or Legal Entity authorized to submit on behalf of the copyright owner. For the purposes of this definition, "submitted" means any form of electronic, verbal, or written communication sent to the Licensor or its representatives, including but not limited to communication on electronic mailing lists, source code control systems, and issue tracking systems that are managed by, or on behalf of, the Licensor for the purpose of discussing and improving the Work, but excluding communication that is conspicuously marked or otherwise designated in writing by the copyright owner as "Not a Contribution."

"Contributor" shall mean Licensor and any individual or Legal Entity on behalf of whom a Contribution has been received by Licensor and subsequently incorporated within the Work.

2. Grant of Copyright License. Subject to the terms and conditions of this License, each Contributor hereby grants to You a perpetual, worldwide, non-exclusive, no-charge, royalty-free, irrevocable copyright license to reproduce, prepare Derivative Works of, publicly display, publicly perform, sublicense, and distribute the Work and such Derivative Works in Source or Object form.
3. Grant of Patent License. Subject to the terms and conditions of this License, each Contributor hereby grants to You a perpetual, worldwide, non-exclusive, no-charge, royalty-free, irrevocable (except as stated in this section) patent license to make, have made, use, offer to sell, sell, import, and otherwise transfer the Work, where such license applies only to those patent claims licensable by such Contributor that are necessarily infringed by their Contribution(s) alone or by combination of their Contribution(s) with the Work to which such Contribution(s) was submitted. If You institute patent litigation against any entity (including a cross-claim or counterclaim in a lawsuit) alleging that the Work or a Contribution incorporated within the Work constitutes direct or contributory patent infringement, then any patent licenses granted to You under this License for that Work shall terminate as of the date such litigation is filed.
4. Redistribution. You may reproduce and distribute copies of the Work or Derivative Works thereof in any medium, with or without modifications, and in Source or Object form, provided that You meet the following conditions:

    1. You must give any other recipients of the Work or Derivative Works a copy of this License; and
    2. You must cause any modified files to carry prominent notices stating that You changed the files; and

3. You must retain, in the Source form of any Derivative Works that You distribute, all copyright, patent, trademark, and attribution notices from the Source form of the Work, excluding those notices that do not pertain to any part of the Derivative Works; and
4. If the Work includes a "NOTICE" text file as part of its distribution, then any Derivative Works that You distribute must include a readable copy of the attribution notices contained within such NOTICE file, excluding those notices that do not pertain to any part of the Derivative Works, in at least one of the following places: within a NOTICE text file distributed as part of the Derivative Works; within the Source form or documentation, if provided along with the Derivative Works; or, within a display generated by the Derivative Works, if and wherever such third-party notices normally appear. The contents of the NOTICE file are for informational purposes only and do not modify the License. You may add Your own attribution notices within Derivative Works that You distribute, alongside or as an addendum to the NOTICE text from the Work, provided that such additional attribution notices cannot be construed as modifying the License.

   You may add Your own copyright statement to Your modifications and may provide additional or different license terms and conditions for use, reproduction, or distribution of Your modifications, or for any such Derivative Works as a whole, provided Your use, reproduction, and distribution of the Work otherwise complies with the conditions stated in this License.

5. Submission of Contributions. Unless You explicitly state otherwise, any Contribution intentionally submitted for inclusion in the Work by You to the Licensor shall be under the terms and conditions of this License, without any additional terms or conditions. Notwithstanding the above, nothing herein shall supersede or modify the terms of any separate license agreement you may have executed with Licensor regarding such Contributions.
6. Trademarks. This License does not grant permission to use the trade names, trademarks, service marks, or product names of the Licensor, except as required for reasonable and customary use in describing the origin of the Work and reproducing the content of the NOTICE file.
7. Disclaimer of Warranty. Unless required by applicable law or agreed to in writing, Licensor provides the Work (and each Contributor provides its Contributions) on an "AS IS" BASIS, WITHOUT WARRANTIES OR CONDITIONS OF ANY KIND, either express or implied, including, without limitation, any warranties or conditions of TITLE, NON-INFRINGEMENT, MERCHANTABILITY, or FITNESS FOR A PARTICULAR PURPOSE. You are solely responsible for determining the appropriateness of using or redistributing the Work and assume any risks associated with Your exercise of permissions under this License.
8. Limitation of Liability. In no event and under no legal theory, whether in tort (including negligence), contract, or otherwise, unless required by applicable law (such as deliberate and grossly negligent acts) or agreed to in writing, shall any Contributor be liable to You for damages, including any direct, indirect, special, incidental, or consequential damages of any character arising as a result of this License or out of the use or inability to use the Work (including but not limited to damages for loss of goodwill, work stoppage, computer failure or malfunction, or any and all other commercial damages or losses), even if such Contributor has been advised of the possibility of such damages.
9. Accepting Warranty or Additional Liability. While redistributing the Work or Derivative Works thereof, You may choose to offer, and charge a fee for, acceptance of support, warranty, indemnity, or other liability obligations and/or rights consistent with this License. However, in accepting such obligations, You may act only on Your own behalf and on Your sole responsibility, not on behalf of any other Contributor, and only if You agree to indemnify, defend, and hold each Contributor harmless for any liability incurred by, or claims asserted against, such Contributor by reason of your accepting any

such warranty or additional liability.
END OF TERMS AND CONDITIONS

---- Part 1: CMU/UCD copyright notice: (BSD like) -----

Copyright 1989, 1991, 1992 by Carnegie Mellon University

Derivative Work - 1996, 1998-2000

Copyright 1996, 1998-2000 The Regents of the University of California

All Rights Reserved

Permission to use, copy, modify and distribute this software and its documentation for any purpose and without fee is hereby granted, provided that the above copyright notice appears in all copies and that both that copyright notice and this permission notice appear in supporting documentation, and that the name of CMU and The Regents of the University of California not be used in advertising or publicity pertaining to distribution of the software without specific written permission.

CMU AND THE REGENTS OF THE UNIVERSITY OF CALIFORNIA DISCLAIM ALL WARRANTIES WITH REGARD TO THIS SOFTWARE, INCLUDING ALL IMPLIED WARRANTIES OF MERCHANTABILITY AND FITNESS. IN NO EVENT SHALL CMU OR THE REGENTS OF THE UNIVERSITY OF CALIFORNIA BE LIABLE FOR ANY SPECIAL, INDIRECT OR CONSEQUENTIAL DAMAGES OR ANY DAMAGES WHATSOEVER RESULTING FROM THE LOSS OF USE, DATA OR PROFITS, WHETHER IN AN ACTION OF CONTRACT, NEGLIGENCE OR OTHER TORTIOUS ACTION, ARISING OUT OF OR IN CONNECTION WITH THE USE OR PERFORMANCE OF THIS SOFTWARE.

---- Part 2: Networks Associates Technology, Inc copyright notice (BSD) -----

Copyright (c) 2001-2003, Networks Associates Technology, Inc

All rights reserved.

Redistribution and use in source and binary forms, with or without modification, are permitted provided that the following conditions are met:

* Redistributions of source code must retain the above copyright notice, this list of conditions and the following disclaimer.
* Redistributions in binary form must reproduce the above copyright notice, this list of conditions and the following disclaimer in the documentation and/or other materials provided with the distribution.
* Neither the name of the Networks Associates Technology, Inc nor the names of its contributors may be used to endorse or promote products derived from this software without specific prior written permission.

THIS SOFTWARE IS PROVIDED BY THE COPYRIGHT HOLDERS AND CONTRIBUTORS ``AS IS'' AND ANY EXPRESS OR IMPLIED WARRANTIES, INCLUDING, BUT NOT LIMITED TO, THE IMPLIED WARRANTIES OF MERCHANTABILITY AND FITNESS FOR A PARTICULAR PURPOSE ARE DISCLAIMED. IN NO EVENT SHALL THE COPYRIGHT HOLDERS OR CONTRIBUTORS BE LIABLE FOR ANY DIRECT, INDIRECT, INCIDENTAL, SPECIAL, EXEMPLARY, OR CONSEQUENTIAL DAMAGES (INCLUDING, BUT NOT LIMITED TO, PROCUREMENT OF SUBSTITUTE GOODS OR SERVICES; LOSS OF USE, DATA, OR PROFITS; OR BUSINESS INTERRUPTION) HOWEVER CAUSED AND ON ANY THEORY OF LIABILITY, WHETHER IN CONTRACT, STRICT LIABILITY, OR TORT (INCLUDING NEGLIGENCE OR OTHERWISE) ARISING IN ANY WAY OUT OF THE USE OF THIS SOFTWARE, EVEN IF ADVISED OF THE POSSIBILITY OF SUCH DAMAGE.

---- Part 3: Cambridge Broadband Ltd. copyright notice (BSD) -----

Portions of this code are copyright (c) 2001-2003, Cambridge Broadband Ltd.

All rights reserved.

Redistribution and use in source and binary forms, with or without modification, are permitted provided that the following conditions are met:

* Redistributions of source code must retain the above copyright notice, this list of conditions and the following disclaimer.
* Redistributions in binary form must reproduce the above copyright notice, this list of conditions and the following disclaimer in the documentation and/or other materials provided with the distribution.
* The name of Cambridge Broadband Ltd. may not be used to endorse or promote products derived from this software without specific prior written permission.

THIS SOFTWARE IS PROVIDED BY THE COPYRIGHT HOLDER ``AS IS'' AND ANY EXPRESS OR IMPLIED WARRANTIES, INCLUDING, BUT NOT LIMITED TO, THE IMPLIED WARRANTIES OF MERCHANTABILITY AND FITNESS FOR A PARTICULAR PURPOSE ARE DISCLAIMED. IN NO EVENT SHALL THE COPYRIGHT HOLDER BE LIABLE FOR ANY DIRECT, INDIRECT, INCIDENTAL, SPECIAL, EXEMPLARY, OR CONSEQUENTIAL DAMAGES (INCLUDING, BUT NOT LIMITED TO, PROCUREMENT OF SUBSTITUTE GOODS OR SERVICES; LOSS OF USE, DATA, OR PROFITS; OR BUSINESS INTERRUPTION) HOWEVER CAUSED AND ON ANY THEORY OF LIABILITY, WHETHER IN CONTRACT, STRICT LIABILITY, OR TORT (INCLUDING NEGLIGENCE OR OTHERWISE) ARISING IN ANY WAY OUT OF THE USE OF THIS SOFTWARE, EVEN IF ADVISED OF THE POSSIBILITY OF SUCH DAMAGE.

---- Part 4: Sun Microsystems, Inc. copyright notice (BSD) -----

Copyright c 2003 Sun Microsystems, Inc., 4150 Network Circle, Santa Clara, California 95054, U.S.A. All rights reserved.

Use is subject to license terms below.

This distribution may include materials developed by third parties.

Sun, Sun Microsystems, the Sun logo and Solaris are trademarks or registered trademarks of Sun Microsystems, Inc. in the U.S. and other countries.

Redistribution and use in source and binary forms, with or without modification, are permitted provided that the following conditions are met:

* Redistributions of source code must retain the above copyright notice, this list of conditions and the following disclaimer.
* Redistributions in binary form must reproduce the above copyright notice, this list of conditions and the following disclaimer in the documentation and/or other materials provided with the distribution.
* Neither the name of the Sun Microsystems, Inc. nor the names of its contributors may be used to endorse or promote products derived from this software without specific prior written permission.

THIS SOFTWARE IS PROVIDED BY THE COPYRIGHT HOLDERS AND CONTRIBUTORS ``AS IS'' AND ANY EXPRESS OR IMPLIED WARRANTIES, INCLUDING, BUT NOT LIMITED TO, THE IMPLIED WARRANTIES OF MERCHANTABILITY AND FITNESS FOR A PARTICULAR PURPOSE ARE DISCLAIMED. IN NO EVENT SHALL THE COPYRIGHT HOLDERS OR CONTRIBUTORS BE LIABLE FOR ANY DIRECT, INDIRECT, INCIDENTAL, SPECIAL, EXEMPLARY, OR CONSEQUENTIAL DAMAGES (INCLUDING, BUT NOT LIMITED TO, PROCUREMENT OF SUBSTITUTE GOODS OR

SERVICES; LOSS OF USE, DATA, OR PROFITS; OR BUSINESS INTERRUPTION) HOWEVER CAUSED AND ON ANY THEORY OF LIABILITY, WHETHER IN CONTRACT, STRICT LIABILITY, OR TORT (INCLUDING NEGLIGENCE OR OTHERWISE) ARISING IN ANY WAY OUT OF THE USE OF THIS SOFTWARE, EVEN IF ADVISED OF THE POSSIBILITY OF SUCH DAMAGE.

---- Part 5: Sparta, Inc copyright notice (BSD) -----

Copyright (c) 2003-2012, Sparta, Inc

All rights reserved.

Redistribution and use in source and binary forms, with or without modification, are permitted provided that the following conditions are met:

* Redistributions of source code must retain the above copyright notice, this list of conditions and the following disclaimer.
* Redistributions in binary form must reproduce the above copyright notice, this list of conditions and the following disclaimer in the documentation and/or other materials provided with the distribution.
* Neither the name of Sparta, Inc nor the names of its contributors may be used to endorse or promote products derived from this software without specific prior written permission.

THIS SOFTWARE IS PROVIDED BY THE COPYRIGHT HOLDERS AND CONTRIBUTORS ``AS IS'' AND ANY EXPRESS OR IMPLIED WARRANTIES, INCLUDING, BUT NOT LIMITED TO, THE IMPLIED WARRANTIES OF MERCHANTABILITY AND FITNESS FOR A PARTICULAR PURPOSE ARE DISCLAIMED. IN NO EVENT SHALL THE COPYRIGHT HOLDERS OR CONTRIBUTORS BE LIABLE FOR ANY DIRECT, INDIRECT, INCIDENTAL, SPECIAL, EXEMPLARY, OR CONSEQUENTIAL DAMAGES (INCLUDING, BUT NOT LIMITED TO, PROCUREMENT OF SUBSTITUTE GOODS OR SERVICES; LOSS OF USE, DATA, OR PROFITS; OR BUSINESS INTERRUPTION) HOWEVER CAUSED AND ON ANY THEORY OF LIABILITY, WHETHER IN CONTRACT, STRICT LIABILITY, OR TORT (INCLUDING NEGLIGENCE OR OTHERWISE) ARISING IN ANY WAY OUT OF THE USE OF THIS SOFTWARE, EVEN IF ADVISED OF THE POSSIBILITY OF SUCH DAMAGE.

---- Part 6: Cisco/BUPTNIC copyright notice (BSD) -----

Copyright (c) 2004, Cisco, Inc and Information Network Center of Beijing University of Posts and Telecommunications.

All rights reserved.

Redistribution and use in source and binary forms, with or without modification, are permitted provided that the following conditions are met:

* Redistributions of source code must retain the above copyright notice, this list of conditions and the following disclaimer.
* Redistributions in binary form must reproduce the above copyright notice, this list of conditions and the following disclaimer in the documentation and/or other materials provided with the distribution.
* Neither the name of Cisco, Inc, Beijing University of Posts and Telecommunications, nor the names of their contributors may be used to endorse or promote products derived from this software without specific prior written permission.

THIS SOFTWARE IS PROVIDED BY THE COPYRIGHT HOLDERS AND CONTRIBUTORS ``AS IS'' AND ANY EXPRESS OR IMPLIED WARRANTIES, INCLUDING, BUT NOT LIMITED TO, THE IMPLIED WARRANTIES OF MERCHANTABILITY AND FITNESS FOR A PARTICULAR PURPOSE

ARE DISCLAIMED. IN NO EVENT SHALL THE COPYRIGHT HOLDERS OR CONTRIBUTORS BE LIABLE FOR ANY DIRECT, INDIRECT, INCIDENTAL, SPECIAL, EXEMPLARY, OR CONSEQUENTIAL DAMAGES (INCLUDING, BUT NOT LIMITED TO, PROCUREMENT OF SUBSTITUTE GOODS OR SERVICES; LOSS OF USE, DATA, OR PROFITS; OR BUSINESS INTERRUPTION) HOWEVER CAUSED AND ON ANY THEORY OF LIABILITY, WHETHER IN CONTRACT, STRICT LIABILITY, OR TORT (INCLUDING NEGLIGENCE OR OTHERWISE) ARISING IN ANY WAY OUT OF THE USE OF THIS SOFTWARE, EVEN IF ADVISED OF THE POSSIBILITY OF SUCH DAMAGE.

---- Part 7: Fabasoft R&D Software GmbH & Co KG copyright notice (BSD) -----

Copyright (c) Fabasoft R&D Software GmbH & Co KG, 2003 oss@fabasoft.com

Author: Bernhard Penz <bernhard.penz@fabasoft.com>

Redistribution and use in source and binary forms, with or without modification, are permitted provided that the following conditions are met:

* Redistributions of source code must retain the above copyright notice, this list of conditions and the following disclaimer.
* Redistributions in binary form must reproduce the above copyright notice, this list of conditions and the following disclaimer in the documentation and/or other materials provided with the distribution.
* The name of Fabasoft R&D Software GmbH & Co KG or any of its subsidiaries, brand or product names may not be used to endorse or promote products derived from this software without specific prior written permission.

THIS SOFTWARE IS PROVIDED BY THE COPYRIGHT HOLDER ``AS IS'' AND ANY EXPRESS OR IMPLIED WARRANTIES, INCLUDING, BUT NOT LIMITED TO, THE IMPLIED WARRANTIES OF MERCHANTABILITY AND FITNESS FOR A PARTICULAR PURPOSE ARE DISCLAIMED. IN NO EVENT SHALL THE COPYRIGHT HOLDER BE LIABLE FOR ANY DIRECT, INDIRECT, INCIDENTAL, SPECIAL, EXEMPLARY, OR CONSEQUENTIAL DAMAGES (INCLUDING, BUT NOT LIMITED TO, PROCUREMENT OF SUBSTITUTE GOODS OR SERVICES; LOSS OF USE, DATA, OR PROFITS; OR BUSINESS INTERRUPTION) HOWEVER CAUSED AND ON ANY THEORY OF LIABILITY, WHETHER IN CONTRACT, STRICT LIABILITY, OR TORT (INCLUDING NEGLIGENCE OR OTHERWISE) ARISING IN ANY WAY OUT OF THE USE OF THIS SOFTWARE, EVEN IF ADVISED OF THE POSSIBILITY OF SUCH DAMAGE.

---- Part 8: Apple Inc. copyright notice (BSD) -----

Copyright (c) 2007 Apple Inc. All rights reserved.

Redistribution and use in source and binary forms, with or without modification, are permitted provided that the following conditions are met:

1. Redistributions of source code must retain the above copyright notice, this list of conditions and the following disclaimer.
2. Redistributions in binary form must reproduce the above copyright notice, this list of conditions and the following disclaimer in the documentation and/or other materials provided with the distribution.
3. Neither the name of Apple Inc. ("Apple") nor the names of its contributors may be used to endorse or promote products derived from this software without specific prior written permission.

THIS SOFTWARE IS PROVIDED BY APPLE AND ITS CONTRIBUTORS "AS IS" AND ANY EXPRESS OR IMPLIED WARRANTIES, INCLUDING, BUT NOT LIMITED TO, THE IMPLIED WARRANTIES

OF MERCHANTABILITY AND FITNESS FOR A PARTICULAR PURPOSE ARE DISCLAIMED. IN NO EVENT SHALL APPLE OR ITS CONTRIBUTORS BE LIABLE FOR ANY DIRECT, INDIRECT, INCIDENTAL, SPECIAL, EXEMPLARY, OR CONSEQUENTIAL DAMAGES (INCLUDING, BUT NOT LIMITED TO, PROCUREMENT OF SUBSTITUTE GOODS OR SERVICES; LOSS OF USE, DATA, OR PROFITS; OR BUSINESS INTERRUPTION) HOWEVER CAUSED AND ON ANY THEORY OF LIABILITY, WHETHER IN CONTRACT, STRICT LIABILITY, OR TORT (INCLUDING NEGLIGENCE OR OTHERWISE) ARISING IN ANY WAY OUT OF THE USE OF THIS SOFTWARE, EVEN IF ADVISED OF THE POSSIBILITY OF SUCH DAMAGE.

---- Part 9: ScienceLogic, LLC copyright notice (BSD) -----

Copyright (c) 2009, ScienceLogic, LLC

All rights reserved.

Redistribution and use in source and binary forms, with or without modification, are permitted provided that the following conditions are met:

* Redistributions of source code must retain the above copyright notice, this list of conditions and the following disclaimer.
* Redistributions in binary form must reproduce the above copyright notice, this list of conditions and the following disclaimer in the documentation and/or other materials provided with the distribution.
* Neither the name of ScienceLogic, LLC nor the names of its contributors may be used to endorse or promote products derived from this software without specific prior written permission.

THIS SOFTWARE IS PROVIDED BY THE COPYRIGHT HOLDERS AND CONTRIBUTORS "AS IS" AND ANY EXPRESS OR IMPLIED WARRANTIES, INCLUDING, BUT NOT LIMITED TO, THE IMPLIED WARRANTIES OF MERCHANTABILITY AND FITNESS FOR A PARTICULAR PURPOSE ARE DISCLAIMED. IN NO EVENT SHALL THE COPYRIGHT HOLDERS OR CONTRIBUTORS BE LIABLE FOR ANY DIRECT, INDIRECT, INCIDENTAL, SPECIAL, EXEMPLARY, OR CONSEQUENTIAL DAMAGES (INCLUDING, BUT NOT LIMITED TO, PROCUREMENT OF SUBSTITUTE GOODS OR SERVICES; LOSS OF USE, DATA, OR PROFITS; OR BUSINESS INTERRUPTION) HOWEVER CAUSED AND ON ANY THEORY OF LIABILITY, WHETHER IN CONTRACT, STRICT LIABILITY, OR TORT (INCLUDING NEGLIGENCE OR OTHERWISE) ARISING IN ANY WAY OUT OF THE USE OF THIS SOFTWARE, EVEN IF ADVISED OF THE POSSIBILITY OF SUCH DAMAGE.

MIT License

Copyright (c) 1998, 1999, 2000 Thai Open Source Software Center Ltd

Permission is hereby granted, free of charge, to any person obtaining a copy of this software and associated documentation files (the "Software"), to deal in the Software without restriction, including without limitation the rights to use, copy, modify, merge, publish, distribute, sublicense, and/or sell copies of the Software, and to permit persons to whom the Software is furnished to do so, subject to the following conditions:

The above copyright notice and this permission notice shall be included in all copies or substantial portions of the Software.

THE SOFTWARE IS PROVIDED "AS IS", WITHOUT WARRANTY OF ANY KIND, EXPRESS OR IMPLIED, INCLUDING BUT NOT LIMITED TO THE WARRANTIES OF MERCHANTABILITY, FITNESS FOR A PARTICULAR PURPOSE AND NONINFRINGEMENT. IN NO EVENT SHALL THE AUTHORS

OR COPYRIGHT HOLDERS BE LIABLE FOR ANY CLAIM, DAMAGES OR OTHER LIABILITY, WHETHER IN AN ACTION OF CONTRACT, TORT OR OTHERWISE, ARISING FROM, OUT OF OR IN CONNECTION WITH THE SOFTWARE OR THE USE OR OTHER DEALINGS IN THE SOFTWARE.

Copyright 2000 Computing Research Labs, New Mexico State University

Copyright 2001-2015 Francesco Zappa Nardelli

Permission is hereby granted, free of charge, to any person obtaining a copy of this software and associated documentation files (the "Software"), to deal in the Software without restriction, including without limitation the rights to use, copy, modify, merge, publish, distribute, sublicense, and/or sell copies of the Software, and to permit persons to whom the Software is furnished to do so, subject to the following conditions:

The above copyright notice and this permission notice shall be included in all copies or substantial portions of the Software.

THE SOFTWARE IS PROVIDED "AS IS", WITHOUT WARRANTY OF ANY KIND, EXPRESS OR IMPLIED, INCLUDING BUT NOT LIMITED TO THE WARRANTIES OF MERCHANTABILITY, FITNESS FOR A PARTICULAR PURPOSE AND NONINFRINGEMENT. IN NO EVENT SHALL THE COMPUTING RESEARCH LAB OR NEW MEXICO STATE UNIVERSITY BE LIABLE FOR ANY CLAIM, DAMAGES OR OTHER LIABILITY, WHETHER IN AN ACTION OF CONTRACT, TORT OR OTHERWISE, ARISING FROM, OUT OF OR IN CONNECTION WITH THE SOFTWARE OR THE USE OR OTHER DEALINGS IN THE SOFTWARE.

Written by Joel Sherrill <joel@OARcorp.com>.

COPYRIGHT (c) 1989-2000.

On-Line Applications Research Corporation (OAR).

Permission to use, copy, modify, and distribute this software for any purpose without fee is hereby granted, provided that this entire notice is included in all copies of any software which is or includes a copy or modification of this software.

THIS SOFTWARE IS BEING PROVIDED "AS IS", WITHOUT ANY EXPRESS OR IMPLIED WARRANTY. IN PARTICULAR, THE AUTHOR MAKES NO REPRESENTATION OR WARRANTY OF ANY KIND CONCERNING THE MERCHANTABILITY OF THIS SOFTWARE OR ITS FITNESS FOR ANY PARTICULAR PURPOSE.

(1) Red Hat Incorporated

Copyright (c) 1994-2009 Red Hat, Inc. All rights reserved.

This copyrighted material is made available to anyone wishing to use, modify, copy, or redistribute it subject to the terms and conditions of the BSD License. This program is distributed in the hope that it will be useful, but WITHOUT ANY WARRANTY expressed or implied, including the implied warranties of MERCHANTABILITY or FITNESS FOR A PARTICULAR PURPOSE. A copy of this license is available at http://www.opensource.org/licenses. Any Red Hat trademarks that are incorporated in the source code or documentation are not subject to the BSD License and may only be used or replicated with the express permission of Red Hat, Inc.

(2) University of California, Berkeley

Copyright (c) 1981-2000 The Regents of the University of California.

All rights reserved.

Redistribution and use in source and binary forms, with or without modification, are permitted provided that the following conditions are met:

* Redistributions of source code must retain the above copyright notice, this list of conditions and the following disclaimer.
* Redistributions in binary form must reproduce the above copyright notice, this list of conditions and the following disclaimer in the documentation and/or other materials provided with the distribution.
* Neither the name of the University nor the names of its contributors may be used to endorse or promote products derived from this software without specific prior written permission.

THIS SOFTWARE IS PROVIDED BY THE COPYRIGHT HOLDERS AND CONTRIBUTORS "AS IS" AND ANY EXPRESS OR IMPLIED WARRANTIES, INCLUDING, BUT NOT LIMITED TO, THE IMPLIED WARRANTIES OF MERCHANTABILITY AND FITNESS FOR A PARTICULAR PURPOSE ARE DISCLAIMED. IN NO EVENT SHALL THE COPYRIGHT OWNER OR CONTRIBUTORS BE LIABLE FOR ANY DIRECT, INDIRECT, INCIDENTAL, SPECIAL, EXEMPLARY, OR CONSEQUENTIAL DAMAGES (INCLUDING, BUT NOT LIMITED TO, PROCUREMENT OF SUBSTITUTE GOODS OR SERVICES; LOSS OF USE, DATA, OR PROFITS; OR BUSINESS INTERRUPTION) HOWEVER CAUSED AND ON ANY THEORY OF LIABILITY, WHETHER IN CONTRACT, STRICT LIABILITY, OR TORT (INCLUDING NEGLIGENCE OR OTHERWISE) ARISING IN ANY WAY OUT OF THE USE OF THIS SOFTWARE, EVEN IF ADVISED OF THE POSSIBILITY OF SUCH DAMAGE.

The FreeType Project LICENSE

2006-Jan-27

Copyright 1996-2002, 2006 by

David Turner, Robert Wilhelm, and Werner Lemberg

Introduction

==========

The FreeType Project is distributed in several archive packages; some of them may contain, in addition to the FreeType font engine, various tools and contributions which rely on, or relate to, the FreeType Project.

This license applies to all files found in such packages, and which do not fall under their own explicit license. The license affects thus the FreeType font engine, the test programs, documentation and makefiles, at the very least.

This license was inspired by the BSD, Artistic, and IJG (Independent JPEG Group) licenses, which all encourage inclusion and use of free software in commercial and freeware products alike. As a consequence, its main points are that:

o We don't promise that this software works. However, we will be interested in any kind of bug reports. (`as is' distribution)

o You can use this software for whatever you want, in parts or full form, without having to pay us. (`royalty-free' usage)

o You may not pretend that you wrote this software. If you use it, or only parts of it, in a program, you must acknowledge somewhere in your documentation that you have used the FreeType code. (`credits')

We specifically permit and encourage the inclusion of this software, with or without modifications, in commercial products.

We disclaim all warranties covering The FreeType Project and assume no liability related to The FreeType Project.

Finally, many people asked us for a preferred form for a credit/disclaimer to use in compliance with this license. We thus encourage you to use the following text:

"""

Portions of this software are copyright © <year> The FreeType

Project (www.freetype.org). All rights reserved.

"""

Please replace <year> with the value from the FreeType version you actually use.

Legal Terms

==========

0. Definitions

Throughout this license, the terms `package', `FreeType Project', and `FreeType archive' refer to the set of files originally distributed by the authors (David Turner, Robert Wilhelm, and Werner Lemberg) as the `FreeType Project', be they named as alpha, beta or final release.

`You' refers to the licensee, or person using the project, where `using' is a generic term including compiling the project's source code as well as linking it to form a `program' or `executable'.

This program is referred to as `a program using the FreeType engine'.

This license applies to all files distributed in the original FreeType Project, including all source code, binaries and documentation, unless otherwise stated in the file in its original, unmodified form as distributed in the original archive.

If you are unsure whether or not a particular file is covered by this license, you must contact us to verify this.

The FreeType Project is copyright (C) 1996-2000 by David Turner, Robert Wilhelm, and Werner Lemberg. All rights reserved except as specified below.

1. No Warranty

THE FREETYPE PROJECT IS PROVIDED `AS IS' WITHOUT WARRANTY OF ANY KIND, EITHER EXPRESS OR IMPLIED, INCLUDING, BUT NOT LIMITED TO, WARRANTIES OF MERCHANTABILITY AND FITNESS FOR A PARTICULAR PURPOSE. IN NO EVENT WILL ANY OF THE AUTHORS OR COPYRIGHT HOLDERS BE LIABLE FOR ANY DAMAGES CAUSED BY THE USE OR THE INABILITY TO USE, OF THE FREETYPE PROJECT.

2. Redistribution

This license grants a worldwide, royalty-free, perpetual and irrevocable right and license to use, execute, perform, compile, display, copy, create derivative works of, distribute and sublicense the FreeType Project

(in both source and object code forms) and derivative works thereof for any purpose; and to authorize others to exercise some or all of the rights granted herein, subject to the following conditions:

o Redistribution of source code must retain this license file (`FTL.TXT') unaltered; any additions, deletions or changes to the original files must be clearly indicated in accompanying documentation. The copyright notices of the unaltered, original files must be preserved in all copies of source files.

o Redistribution in binary form must provide a disclaimer that states that the software is based in part of the work of the FreeType Team, in the distribution documentation. We also encourage you to put an URL to the FreeType web page in your documentation, though this isn't mandatory.

These conditions apply to any software derived from or based on the FreeType Project, not just the unmodified files. If you use our work, you must acknowledge us. However, no fee need be paid to us.

3. Advertising

Neither the FreeType authors and contributors nor you shall use the name of the other for commercial, advertising, or promotional purposes without specific prior written permission.

We suggest, but do not require, that you use one or more of the following phrases to refer to this software in your documentation or advertising materials: `FreeType Project', `FreeType Engine', `FreeType library', or `FreeType Distribution'.

As you have not signed this license, you are not required to accept it. However, as the FreeType Project is copyrighted material, only this license, or another one contracted with the authors, grants you the right to use, distribute, and modify it.

Therefore, by using, distributing, or modifying the FreeType Project, you indicate that you understand and accept all the terms of this license.

4. Contacts

There are two mailing lists related to FreeType:

o freetype@nongnu.org

Discusses general use and applications of FreeType, as well as future and wanted additions to the library and distribution.

If you are looking for support, start in this list if you haven't found anything to help you in the documentation.

o freetype-devel@nongnu.org

Discusses bugs, as well as engine internals, design issues, specific licenses, porting, etc.

Our home page can be found at

http://www.freetype.org

--- end of FTL.TXT ---

The TWAIN Toolkit is distributed as is. The developer and distributors of the TWAIN Toolkit expressly disclaim all implied, express or statutory warranties including, without limitation, the implied warranties of merchantability, noninfringement of third party rights and fitness for a particular purpose. Neither the

developers nor the distributors will be liable for damages, whether direct, indirect, special, incidental, or consequential, as a result of the reproduction, modification, distribution or other use of the TWAIN Toolkit.

JSON for Modern C++

Copyright (c) 2013-2017 Niels Lohmann

Permission is hereby granted, free of charge, to any person obtaining a copy of this software and associated documentation files (the "Software"), to deal in the Software without restriction, including without limitation the rights to use, copy, modify, merge, publish, distribute, sublicense, and/or sell copies of the Software, and to permit persons to whom the Software is furnished to do so, subject to the following conditions:

The above copyright notice and this permission notice shall be included in all copies or substantial portions of the Software.

THE SOFTWARE IS PROVIDED "AS IS", WITHOUT WARRANTY OF ANY KIND, EXPRESS OR IMPLIED, INCLUDING BUT NOT LIMITED TO THE WARRANTIES OF MERCHANTABILITY, FITNESS FOR A PARTICULAR PURPOSE AND NONINFRINGEMENT. IN NO EVENT SHALL THE AUTHORS OR COPYRIGHT HOLDERS BE LIABLE FOR ANY CLAIM, DAMAGES OR OTHER LIABILITY, WHETHER IN AN ACTION OF CONTRACT, TORT OR OTHERWISE, ARISING FROM, OUT OF OR IN CONNECTION WITH THE SOFTWARE OR THE USE OR OTHER DEALINGS IN THE SOFTWARE.

Copyright (c) 2011 - 2015 ARM LIMITED

All rights reserved.

Redistribution and use in source and binary forms, with or without modification, are permitted provided that the following conditions are met:

- Redistributions of source code must retain the above copyright notice, this list of conditions and the following disclaimer.
- Redistributions in binary form must reproduce the above copyright notice, this list of conditions and the following disclaimer in the documentation and/or other materials provided with the distribution.
- Neither the name of ARM nor the names of its contributors may be used to endorse or promote products derived from this software without specific prior written permission.

THIS SOFTWARE IS PROVIDED BY THE COPYRIGHT HOLDERS AND CONTRIBUTORS "AS IS" AND ANY EXPRESS OR IMPLIED WARRANTIES, INCLUDING, BUT NOT LIMITED TO, THE IMPLIED WARRANTIES OF MERCHANTABILITY AND FITNESS FOR A PARTICULAR PURPOSE ARE DISCLAIMED. IN NO EVENT SHALL COPYRIGHT HOLDERS AND CONTRIBUTORS BE LIABLE FOR ANY DIRECT, INDIRECT, INCIDENTAL, SPECIAL, EXEMPLARY, OR CONSEQUENTIAL DAMAGES (INCLUDING, BUT NOT LIMITED TO, PROCUREMENT OF SUBSTITUTE GOODS OR SERVICES; LOSS OF USE, DATA, OR PROFITS; OR BUSINESS INTERRUPTION) HOWEVER CAUSED AND ON ANY THEORY OF LIABILITY, WHETHER IN CONTRACT, STRICT LIABILITY, OR TORT (INCLUDING NEGLIGENCE OR OTHERWISE) ARISING IN ANY WAY OUT OF THE USE OF THIS SOFTWARE, EVEN IF ADVISED OF THE POSSIBILITY OF SUCH DAMAGE.

Copyright (c) 2014, Kenneth MacKay

All rights reserved.

Redistribution and use in source and binary forms, with or without modification, are permitted provided that the following conditions are met:

* Redistributions of source code must retain the above copyright notice, this list of conditions and the following disclaimer.
* Redistributions in binary form must reproduce the above copyright notice, this list of conditions and the following disclaimer in the documentation and/or other materials provided with the distribution.

THIS SOFTWARE IS PROVIDED BY THE COPYRIGHT HOLDERS AND CONTRIBUTORS "AS IS" AND ANY EXPRESS OR IMPLIED WARRANTIES, INCLUDING, BUT NOT LIMITED TO, THE IMPLIED WARRANTIES OF MERCHANTABILITY AND FITNESS FOR A PARTICULAR PURPOSE ARE DISCLAIMED. IN NO EVENT SHALL THE COPYRIGHT HOLDER OR CONTRIBUTORS BE LIABLE FOR ANY DIRECT, INDIRECT, INCIDENTAL, SPECIAL, EXEMPLARY, OR CONSEQUENTIAL DAMAGES (INCLUDING, BUT NOT LIMITED TO, PROCUREMENT OF SUBSTITUTE GOODS OR SERVICES; LOSS OF USE, DATA, OR PROFITS; OR BUSINESS INTERRUPTION) HOWEVER CAUSED AND ON ANY THEORY OF LIABILITY, WHETHER IN CONTRACT, STRICT LIABILITY, OR TORT (INCLUDING NEGLIGENCE OR OTHERWISE) ARISING IN ANY WAY OUT OF THE USE OF THIS SOFTWARE, EVEN IF ADVISED OF THE POSSIBILITY OF SUCH DAMAGE.

Copyright (c) 2006, CRYPTOGAMS by <appro@openssl.org> All rights reserved.

Redistribution and use in source and binary forms, with or without modification, are permitted provided that the following conditions are met:

* Redistributions of source code must retain copyright notices, this list of conditions and the following disclaimer.
* Redistributions in binary form must reproduce the above copyright notice, this list of conditions and the following disclaimer in the documentation and/or other materials provided with the distribution.
* Neither the name of the CRYPTOGAMS nor the names of its copyright holder and contributors may be used to endorse or promote products derived from this software without specific prior written permission.

ALTERNATIVELY, provided that this notice is retained in full, this product may be distributed under the terms of the GNU General Public License (GPL), in which case the provisions of the GPL apply INSTEAD OF those given above.

THIS SOFTWARE IS PROVIDED BY THE COPYRIGHT HOLDER AND CONTRIBUTORS "AS IS" AND ANY EXPRESS OR IMPLIED WARRANTIES, INCLUDING, BUT NOT LIMITED TO, THE IMPLIED WARRANTIES OF MERCHANTABILITY AND FITNESS FOR A PARTICULAR PURPOSE ARE DISCLAIMED. IN NO EVENT SHALL THE COPYRIGHT OWNER OR CONTRIBUTORS BE LIABLE FOR ANY DIRECT, INDIRECT, INCIDENTAL, SPECIAL, EXEMPLARY, OR CONSEQUENTIAL DAMAGES (INCLUDING, BUT NOT LIMITED TO, PROCUREMENT OF SUBSTITUTE GOODS OR SERVICES; LOSS OF USE, DATA, OR PROFITS; OR BUSINESS INTERRUPTION) HOWEVER CAUSED AND ON ANY THEORY OF LIABILITY, WHETHER IN CONTRACT, STRICT LIABILITY, OR TORT (INCLUDING NEGLIGENCE OR OTHERWISE) ARISING IN ANY WAY OUT OF THE USE OF THIS SOFTWARE, EVEN IF ADVISED OF THE POSSIBILITY OF SUCH DAMAGE.

ISC License

Copyright (c) 2013-2017

Frank Denis <j at pureftpd dot org>

Permission to use, copy, modify, and/or distribute this software for any purpose with or without fee is hereby granted, provided that the above copyright notice and this permission notice appear in all copies.

THE SOFTWARE IS PROVIDED "AS IS" AND THE AUTHOR DISCLAIMS ALL WARRANTIES WITH REGARD TO THIS SOFTWARE INCLUDING ALL IMPLIED WARRANTIES OF MERCHANTABILITY AND FITNESS. IN NO EVENT SHALL THE AUTHOR BE LIABLE FOR ANY SPECIAL, DIRECT, INDIRECT, OR CONSEQUENTIAL DAMAGES OR ANY DAMAGES WHATSOEVER RESULTING FROM LOSS OF USE, DATA OR PROFITS, WHETHER IN AN ACTION OF CONTRACT, NEGLIGENCE OR OTHER TORTIOUS ACTION, ARISING OUT OF OR IN CONNECTION WITH THE USE OR PERFORMANCE OF THIS SOFTWARE.

Copyright (c) 2008 The NetBSD Foundation, Inc.

All rights reserved.

This code is derived from software contributed to The NetBSD Foundation
by Lennart Augustsson (lennart@augustsson.net) at
Carlstedt Research & Technology.

Redistribution and use in source and binary forms, with or without
modification, are permitted provided that the following conditions
are met:

1. Redistributions of source code must retain the above copyright
   notice, this list of conditions and the following disclaimer.
2. Redistributions in binary form must reproduce the above copyright
   notice, this list of conditions and the following disclaimer in the
   documentation and/or other materials provided with the distribution.

THIS SOFTWARE IS PROVIDED BY THE NETBSD FOUNDATION, INC. AND CONTRIBUTORS
"AS IS" AND ANY EXPRESS OR IMPLIED WARRANTIES, INCLUDING, BUT NOT LIMITED
TO, THE IMPLIED WARRANTIES OF MERCHANTABILITY AND FITNESS FOR A PARTICULAR
PURPOSE ARE DISCLAIMED. IN NO EVENT SHALL THE FOUNDATION OR CONTRIBUTORS
BE LIABLE FOR ANY DIRECT, INDIRECT, INCIDENTAL, SPECIAL, EXEMPLARY, OR
CONSEQUENTIAL DAMAGES (INCLUDING, BUT NOT LIMITED TO, PROCUREMENT OF
SUBSTITUTE GOODS OR SERVICES; LOSS OF USE, DATA, OR PROFITS; OR BUSINESS
INTERRUPTION) HOWEVER CAUSED AND ON ANY THEORY OF LIABILITY, WHETHER IN
CONTRACT, STRICT LIABILITY, OR TORT (INCLUDING NEGLIGENCE OR OTHERWISE)
ARISING IN ANY WAY OUT OF THE USE OF THIS SOFTWARE, EVEN IF ADVISED OF THE
POSSIBILITY OF SUCH DAMAGE.

Copyright (c) 2000 Intel Corporation

All rights reserved.

Redistribution and use in source and binary forms, with or without
modification, are permitted provided that the following conditions are met:

* Redistributions of source code must retain the above copyright notice,
this list of conditions and the following disclaimer.

* Redistributions in binary form must reproduce the above copyright notice,
this list of conditions and the following disclaimer in the documentation
and/or other materials provided with the distribution.
* Neither name of Intel Corporation nor the names of its contributors
may be used to endorse or promote products derived from this software
without specific prior written permission.

THIS SOFTWARE IS PROVIDED BY THE COPYRIGHT HOLDERS AND CONTRIBUTORS
"AS IS" AND ANY EXPRESS OR IMPLIED WARRANTIES, INCLUDING, BUT NOT
LIMITED TO, THE IMPLIED WARRANTIES OF MERCHANTABILITY AND FITNESS FOR
A PARTICULAR PURPOSE ARE DISCLAIMED. IN NO EVENT SHALL INTEL OR
CONTRIBUTORS BE LIABLE FOR ANY DIRECT, INDIRECT, INCIDENTAL, SPECIAL,
EXEMPLARY, OR CONSEQUENTIAL DAMAGES (INCLUDING, BUT NOT LIMITED TO,
PROCUREMENT OF SUBSTITUTE GOODS OR SERVICES; LOSS OF USE, DATA, OR
PROFITS; OR BUSINESS INTERRUPTION) HOWEVER CAUSED AND ON ANY THEORY
OF LIABILITY, WHETHER IN CONTRACT, STRICT LIABILITY, OR TORT (INCLUDING
NEGLIGENCE OR OTHERWISE) ARISING IN ANY WAY OUT OF THE USE OF THIS
SOFTWARE, EVEN IF ADVISED OF THE POSSIBILITY OF SUCH DAMAGE.

Lua

Copyright © 1994–2014 Lua.org, PUC-Rio.

Permission is hereby granted, free of charge, to any person obtaining a copy of this software and associated
documentation files (the "Software"), to deal in the Software without restriction, including without limitation the
rights to use, copy, modify, merge, publish, distribute, sublicense, and/or sell copies of the Software, and to
permit persons to whom the Software is furnished to do so, subject to the following conditions:

The above copyright notice and this permission notice shall be included in all copies or substantial portions of
the Software.

THE SOFTWARE IS PROVIDED "AS IS", WITHOUT WARRANTY OF ANY KIND, EXPRESS OR IMPLIED,
INCLUDING BUT NOT LIMITED TO THE WARRANTIES OF MERCHANTABILITY, FITNESS FOR A
PARTICULAR PURPOSE AND NONINFRINGEMENT. IN NO EVENT SHALL THE AUTHORS OR
COPYRIGHT HOLDERS BE LIABLE FOR ANY CLAIM, DAMAGES OR OTHER LIABILITY, WHETHER IN AN
ACTION OF CONTRACT, TORT OR OTHERWISE, ARISING FROM, OUT OF OR IN CONNECTION WITH
THE SOFTWARE OR THE USE OR OTHER DEALINGS IN THE SOFTWARE.

LuaSocket

LuaSocket 2.0.2 license
Copyright © 2004-2007 Diego Nehab

Permission is hereby granted, free of charge, to any person obtaining a copy of this software and associated documentation files (the "Software"), to deal in the Software without restriction, including without limitation the rights to use, copy, modify, merge, publish, distribute, sublicense, and/or sell copies of the Software, and to permit persons to whom the Software is furnished to do so, subject to the following conditions:

The above copyright notice and this permission notice shall be included in all copies or substantial portions of the Software.

THE SOFTWARE IS PROVIDED "AS IS", WITHOUT WARRANTY OF ANY KIND, EXPRESS OR IMPLIED, INCLUDING BUT NOT LIMITED TO THE WARRANTIES OF MERCHANTABILITY, FITNESS FOR A PARTICULAR PURPOSE AND NONINFRINGEMENT. IN NO EVENT SHALL THE AUTHORS OR COPYRIGHT HOLDERS BE LIABLE FOR ANY CLAIM, DAMAGES OR OTHER LIABILITY, WHETHER IN AN ACTION OF CONTRACT, TORT OR OTHERWISE, ARISING FROM, OUT OF OR IN CONNECTION WITH THE SOFTWARE OR THE USE OR OTHER DEALINGS IN THE SOFTWARE.

LuneScript

Copyright (c) 2018 ifritJP

Permission is hereby granted, free of charge, to any person obtaining a copy of this software and associated documentation files (the "Software"), to deal in the Software without restriction, including without limitation the rights to use, copy, modify, merge, publish, distribute, sublicense, and/or sell copies of the Software, and to permit persons to whom the Software is furnished to do so, subject to the following conditions:

The above copyright notice and this permission notice shall be included in all copies or substantial portions of the Software.

THE SOFTWARE IS PROVIDED "AS IS", WITHOUT WARRANTY OF ANY KIND, EXPRESS OR IMPLIED, INCLUDING BUT NOT LIMITED TO THE WARRANTIES OF MERCHANTABILITY, FITNESS FOR A PARTICULAR PURPOSE AND NONINFRINGEMENT. IN NO EVENT SHALL THE AUTHORS OR COPYRIGHT HOLDERS BE LIABLE FOR ANY CLAIM, DAMAGES OR OTHER LIABILITY, WHETHER IN AN ACTION OF CONTRACT, TORT OR OTHERWISE, ARISING FROM, OUT OF OR IN CONNECTION WITH THE SOFTWARE OR THE USE OR OTHER DEALINGS IN THE SOFTWARE.

Copyright (c) 2002-2019, Jouni Malinen <j@w1.fi> and contributors
All Rights Reserved.

This software may be distributed, used, and modified under the terms of BSD license:

Redistribution and use in source and binary forms, with or without modification, are permitted provided that the following conditions are met:

1. Redistributions of source code must retain the above copyright notice, this list of conditions and the following disclaimer.
2. Redistributions in binary form must reproduce the above copyright notice, this list of conditions and the following disclaimer in the documentation and/or other materials provided with the distribution.
3. Neither the name(s) of the above-listed copyright holder(s) nor the names of its contributors may be used to endorse or promote products derived from this software without specific prior written permission.

THIS SOFTWARE IS PROVIDED BY THE COPYRIGHT HOLDERS AND CONTRIBUTORS "AS IS" AND ANY EXPRESS OR IMPLIED WARRANTIES, INCLUDING, BUT NOT LIMITED TO, THE IMPLIED WARRANTIES OF MERCHANTABILITY AND FITNESS FOR A PARTICULAR PURPOSE ARE DISCLAIMED. IN NO EVENT SHALL THE COPYRIGHT OWNER OR CONTRIBUTORS BE LIABLE FOR ANY DIRECT, INDIRECT, INCIDENTAL, SPECIAL, EXEMPLARY, OR CONSEQUENTIAL DAMAGES (INCLUDING, BUT NOT LIMITED TO, PROCUREMENT OF SUBSTITUTE GOODS OR SERVICES; LOSS OF USE, DATA, OR PROFITS; OR BUSINESS INTERRUPTION) HOWEVER CAUSED AND ON ANY THEORY OF LIABILITY, WHETHER IN CONTRACT, STRICT LIABILITY, OR TORT (INCLUDING NEGLIGENCE OR OTHERWISE) ARISING IN ANY WAY OUT OF THE USE OF THIS SOFTWARE, EVEN IF ADVISED OF THE POSSIBILITY OF SUCH DAMAGE.

Copyright (C) 2019, Broadcom Corporation. All Rights Reserved.

Permission to use, copy, modify, and/or distribute this software for any purpose with or without fee is hereby granted, provided that the above copyright notice and this permission notice appear in all copies.

THE SOFTWARE IS PROVIDED "AS IS" AND THE AUTHOR DISCLAIMS ALL WARRANTIES WITH REGARD TO THIS SOFTWARE INCLUDING ALL IMPLIED WARRANTIES OF MERCHANTABILITY AND FITNESS. IN NO EVENT SHALL THE AUTHOR BE LIABLE FOR ANY SPECIAL, DIRECT, INDIRECT, OR CONSEQUENTIAL DAMAGES OR ANY DAMAGES WHATSOEVER RESULTING FROM LOSS OF USE, DATA OR PROFITS, WHETHER IN AN ACTION OF CONTRACT, NEGLIGENCE OR OTHER TORTIOUS ACTION, ARISING OUT OF OR IN CONNECTION WITH THE USE OR PERFORMANCE OF THIS SOFTWARE.

The following applies only to products supporting Wi-Fi.

(c) 2009-2013 by Jeff Mott. All rights reserved.

Redistribution and use in source and binary forms, with or without modification, are permitted provided that the following conditions are met:

* Redistributions of source code must retain the above copyright notice, this list of conditions, and the following disclaimer.
* Redistributions in binary form must reproduce the above copyright notice, this list of conditions, and the following disclaimer in the documentation or other materials provided with the distribution.

* Neither the name CryptoJS nor the names of its contributors may be used to endorse or promote products derived from this software without specific prior written permission.

THIS SOFTWARE IS PROVIDED BY THE COPYRIGHT HOLDERS AND CONTRIBUTORS "AS IS," AND ANY EXPRESS OR IMPLIED WARRANTIES, INCLUDING, BUT NOT LIMITED TO, THE IMPLIED WARRANTIES OF MERCHANTABILITY AND FITNESS FOR A PARTICULAR PURPOSE, ARE DISCLAIMED. IN NO EVENT SHALL THE COPYRIGHT HOLDER OR CONTRIBUTORS BE LIABLE FOR ANY DIRECT, INDIRECT, INCIDENTAL, SPECIAL, EXEMPLARY, OR CONSEQUENTIAL DAMAGES (INCLUDING, BUT NOT LIMITED TO, PROCUREMENT OF SUBSTITUTE GOODS OR SERVICES; LOSS OF USE, DATA, OR PROFITS; OR BUSINESS INTERRUPTION) HOWEVER CAUSED AND ON ANY THEORY OF LIABILITY, WHETHER IN CONTRACT, STRICT LIABILITY, OR TORT (INCLUDING NEGLIGENCE OR OTHERWISE) ARISING IN ANY WAY OUT OF THE USE OF THIS SOFTWARE, EVEN IF ADVISED OF THE POSSIBILITY OF SUCH DAMAGE.

The following applies only to products supporting PIXUS Cloud Link, PIXMA Cloud Link, or MAXIFY Cloud Link.

THE BASIC LIBRARY FUNCTIONS

Written by: Philip Hazel
Email local part: ph10
Email domain: cam.ac.uk
University of Cambridge Computing Service, Cambridge, England.
Copyright (c) 1997-2012 University of Cambridge
All rights reserved.

PCRE JUST-IN-TIME COMPILATION SUPPORT

Written by: Zoltan Herczeg
Email local part: hzmester
Emain domain: freemail.hu
Copyright(c) 2010-2012 Zoltan Herczeg
All rights reserved.

STACK-LESS JUST-IN-TIME COMPILER

Written by: Zoltan Herczeg
Email local part: hzmester
Emain domain: freemail.hu
Copyright(c) 2009-2012 Zoltan Herczeg
All rights reserved.

THE C++ WRAPPER FUNCTIONS

Contributed by: Google Inc.
Copyright (c) 2007-2012, Google Inc.
All rights reserved.

THE "BSD" LICENCE

----------Redistribution and use in source and binary forms, with or without modification, are permitted provided that the following conditions are met:

* Redistributions of source code must retain the above copyright notice, this list of conditions and the following disclaimer.

* Redistributions in binary form must reproduce the above copyright notice, this list of conditions and the following disclaimer in the documentation and/or other materials provided with the distribution.

* Neither the name of the University of Cambridge nor the name of Google Inc. nor the names of their contributors may be used to endorse or promote products derived from this software without specific prior written permission.

THIS SOFTWARE IS PROVIDED BY THE COPYRIGHT HOLDERS AND CONTRIBUTORS "AS IS" AND ANY EXPRESS OR IMPLIED WARRANTIES, INCLUDING, BUT NOT LIMITED TO, THE IMPLIED WARRANTIES OF MERCHANTABILITY AND FITNESS FOR A PARTICULAR PURPOSE ARE DISCLAIMED. IN NO EVENT SHALL THE COPYRIGHT OWNER OR CONTRIBUTORS BE LIABLE FOR ANY DIRECT, INDIRECT, INCIDENTAL, SPECIAL, EXEMPLARY, OR CONSEQUENTIAL DAMAGES (INCLUDING, BUT NOT LIMITED TO, PROCUREMENT OF SUBSTITUTE GOODS OR SERVICES; LOSS OF USE, DATA, OR PROFITS; OR BUSINESS INTERRUPTION) HOWEVER CAUSED AND ON ANY THEORY OF LIABILITY, WHETHER IN CONTRACT, STRICT LIABILITY, OR TORT (INCLUDING NEGLIGENCE OR OTHERWISE) ARISING IN ANY WAY OUT OF THE USE OF THIS SOFTWARE, EVEN IF ADVISED OF THE POSSIBILITY OF SUCH DAMAGE.

This software is based in part on the work of the Independent JPEG Group.

Handling Paper, Ink Tanks, etc.

- Loading Paper
- Refilling Ink Tanks

Loading Paper

- Loading Photo Paper / Plain Paper
- Loading Envelopes

Loading Photo Paper / Plain Paper

You can load photo paper or plain paper.

1. Prepare paper.

Align the edges of paper. If paper is curled, flatten it.

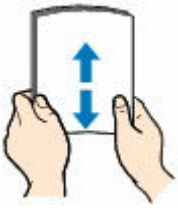

Note

- Align the edges of paper neatly before loading. Loading paper without aligning the edges may cause paper jams.
- If paper is curled, hold the curled corners and gently bend them in the opposite direction until the paper becomes completely flat.

  For more details on handling curled paper, see Check 3 in Paper Is Smudged/Printed Surface Is Scratched/Ink Blots/Paper Curl.
- When using Photo Paper Plus Semi-gloss SG-201, even if the sheet is curled, load one sheet at a time as it is. If you roll up this paper to flatten, this may cause cracks on the surface of the paper and reduce the print quality.

2. Open the paper support (A).

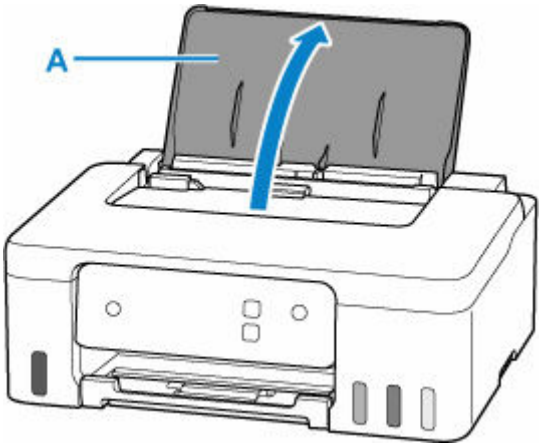

3. Slide right paper guide (B) to open both paper guides.

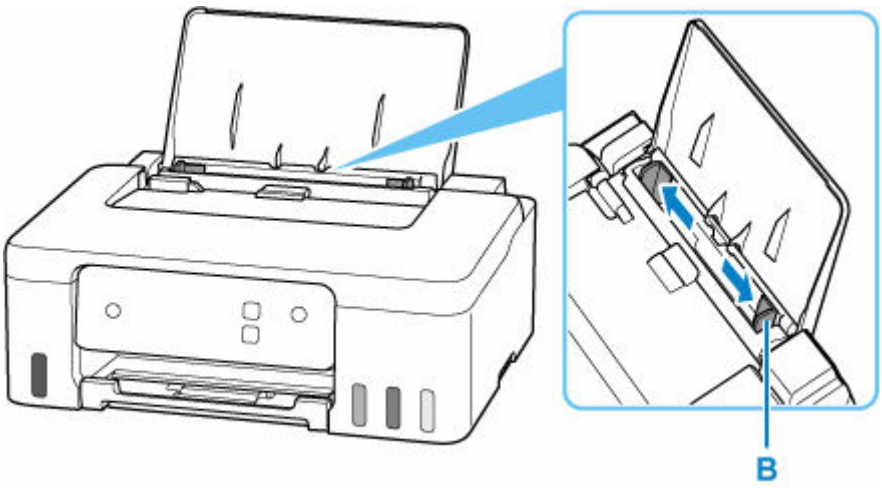

4. Load paper stack in portrait orientation WITH THE PRINT SIDE FACING UP.

After loading paper on the rear tray, the **Paper** lamp flashes.

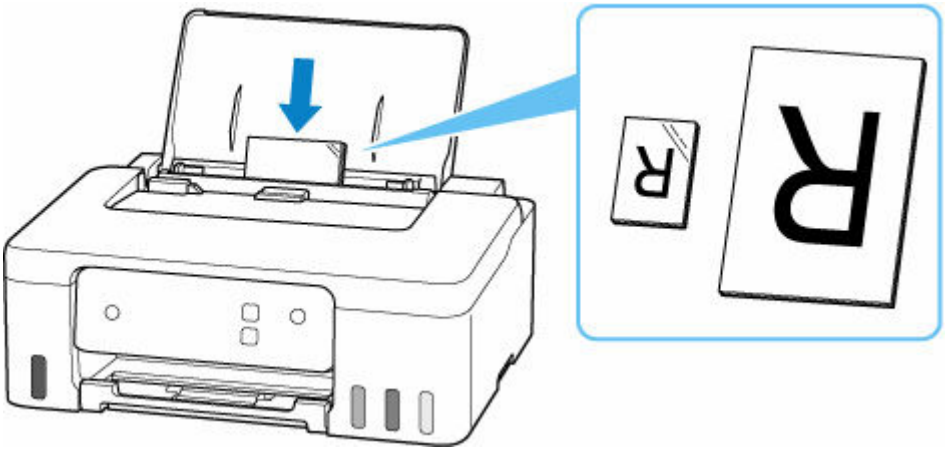

Important

- Always load paper in portrait orientation (C). Loading paper in landscape orientation (D) can cause paper jams.

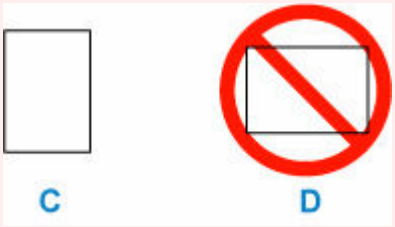

Note

- Check that the tip of paper comes up against the inner part of a feed slot when you load long-length paper. Depending on the weight of the paper, the leading edge may rise and printing may be shifted. Make sure that the leading edge of the paper does not rise, such as by holding the part that protrudes from the rear tray.

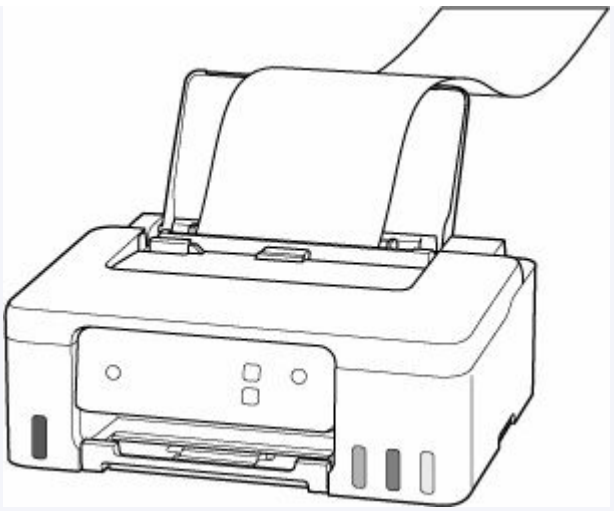

5. Move the right paper guide and adjust the guides to both edges of the paper stack.

Do not slide the paper guides too tightly against the paper. The paper may not be fed properly.

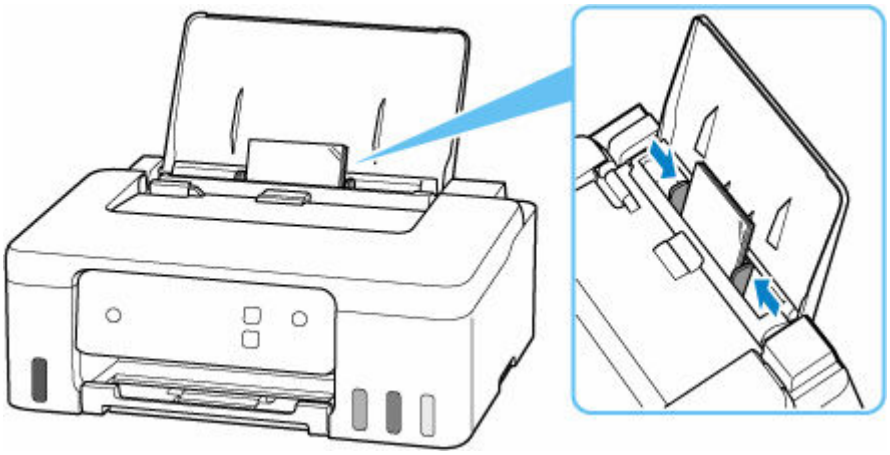

Note

- Do not load sheets of paper higher than the load limit mark (E).

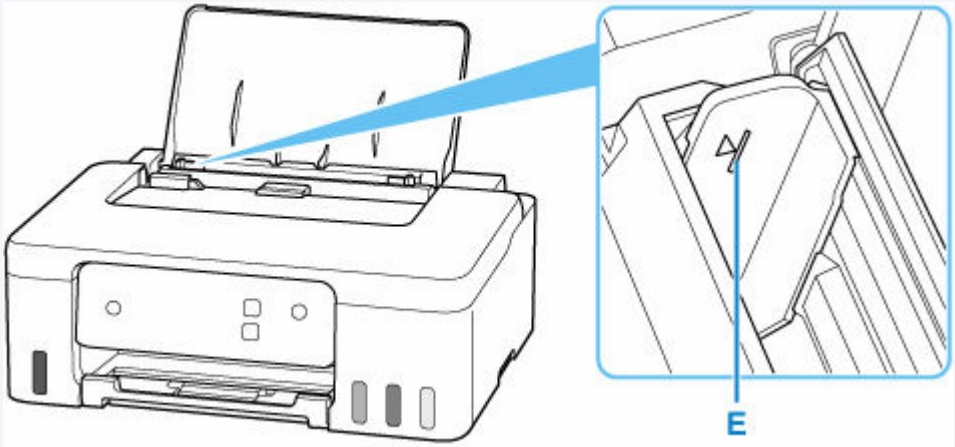

6. Press **Paper Select** button (F) to select ✱ and press **OK** button (G).

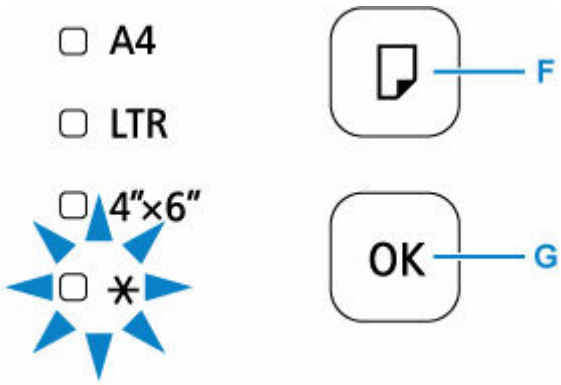

7. Pull out the paper output tray (H) and open the output tray extension (I).

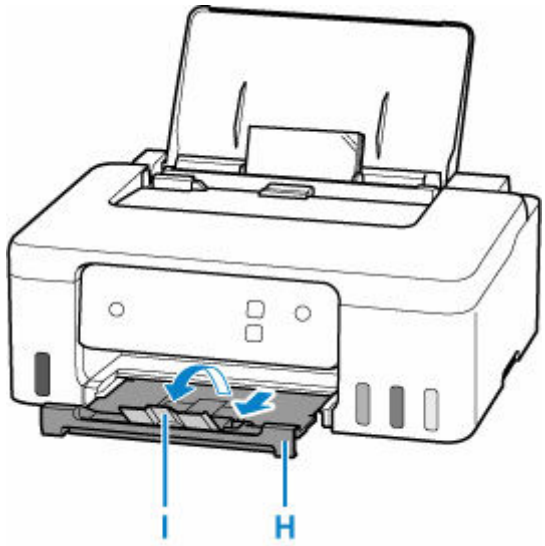

Note

- There are various types of paper, such as paper with a special surface coating for printing photos at optimal quality and paper suitable for documents. Each media type has specific preset settings (how ink is used and sprayed, distance from nozzles, etc.), that allow you to print to that type with optimal image quality. The wrong paper settings may cause poor printout color quality or scratches on the printed surface. If you notice blurring or uneven colors, increase the print quality setting and try printing again.
- To prevent incorrect printing, this printer has a function that detects whether the settings for the paper size loaded on the rear tray matches the paper settings. Before printing, make print settings in accordance with the paper size settings. When this function is enabled, the **Alarm** lamp flashes if these settings do not match to prevent incorrect printing. When the **Alarm** lamp flashes, check and correct the paper settings.
- When printing on long-length paper, support the output paper with your hands or use the printer in a place where the paper does not fall. If the paper falls, the printed side may become dirty or scratched. Also, when supporting the paper with hands, be sure not to pull the paper forcefully while printing.

Loading Envelopes

The address is automatically rotated and printed according to the envelope's direction by specifying with the printer driver properly.

Important

- Do not use the following envelopes. They could jam in the printer or cause the printer to malfunction.
  - Envelopes with an embossed or treated surface
  - Envelopes with a double flap
  - Envelopes whose gummed flaps are already moistened and adhesive

1. Prepare envelopes.

- Press down on all four corners and edges of the envelopes to flatten them.

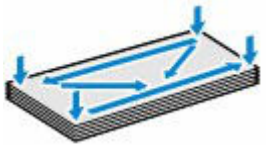

- If the envelopes are curled, hold the opposite corners and gently twist them in the opposite direction.

- If the corner of the envelope flap is folded, flatten it.
- Use a pen to press the leading edge in the inserting direction flat and sharpen the crease.

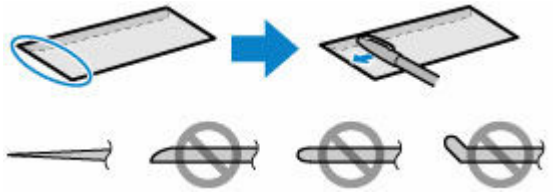

The figures above show a side view of the leading edge of the envelope.

Important

- The envelopes may jam in the printer if they are not flat or the edges are not aligned. Make sure that no curl or puff exceeds 0.12 in. (3 mm).

2. Open the paper support (A).

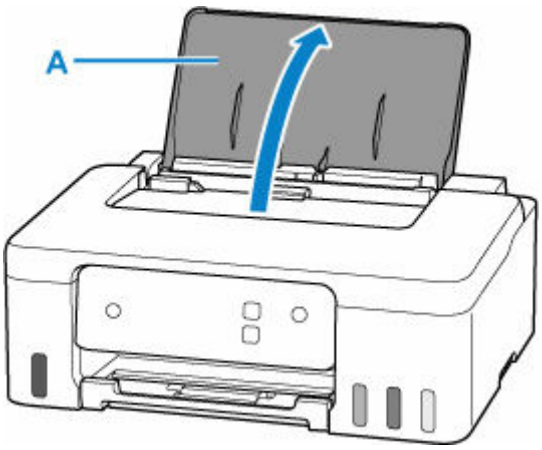

3. Slide right paper guide (B) to open both paper guides.

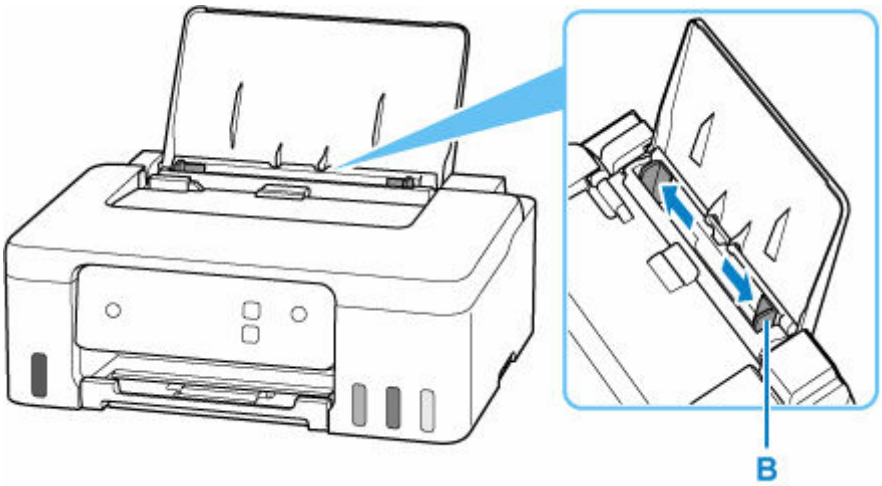

4. Load envelopes in portrait orientation WITH THE PRINT SIDE FACING UP.

   Up to 10 envelopes can be loaded at once.

   Fold flap of the envelope and load the envelope in portrait orientation with the address side facing up.

   After loading envelopes on the rear tray, the **Paper** lamp flashes.

5. Move the right paper guide and adjust the guides to both edges of the envelopes.

   Do not slide the paper guides too tightly against the envelopes. The envelopes may not be fed properly.

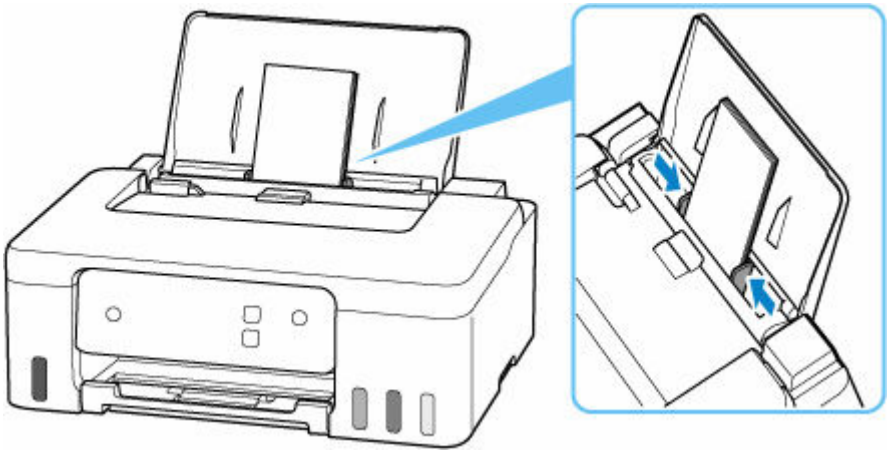

Note

- Do not load envelopes higher than the load limit mark (C).

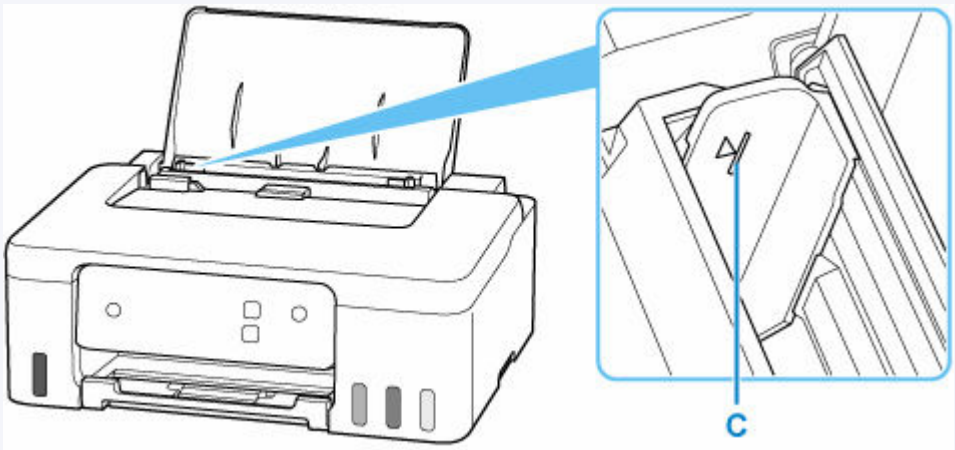

6. Press **Paper Select** button (D) to select ✱ and press **OK** button (E).

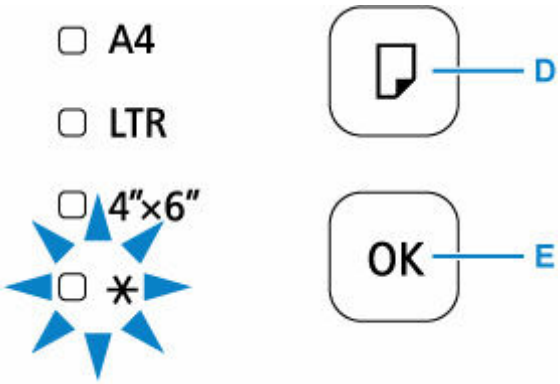

7. Pull out the paper output tray (F) and open the output tray extension (G).

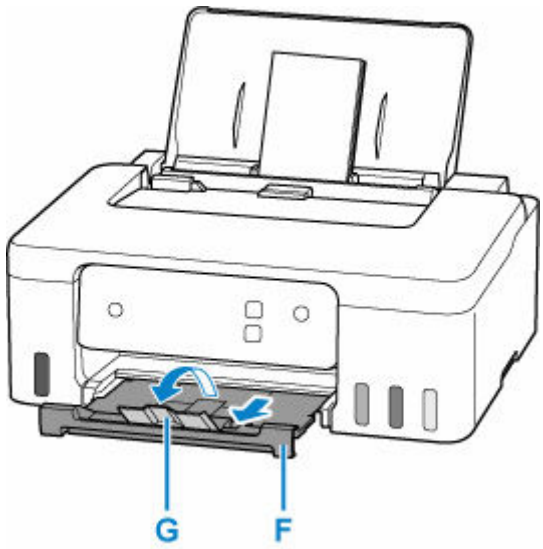

Note

- To prevent incorrect printing, this printer has a function that detects whether the settings for the paper size loaded on the rear tray matches the paper settings. Before printing, make print settings in accordance with the paper size settings. When this function is enabled, the **Alarm** lamp flashes if these settings do not match to prevent incorrect printing. When the **Alarm** lamp flashes, check and correct the paper settings.

Refilling Ink Tanks

- Refilling Ink Tanks
- Checking Ink Level
- Ink Tips

Refilling Ink Tanks

When remaining ink cautions or errors occur, the **Alarm** lamp lights to inform you of the error. In this state, the printer cannot print. Check the remaining ink level with the ink tank indicator on the front of the printer. If the ink level is near the lower limit line (A), refill the ink tank.

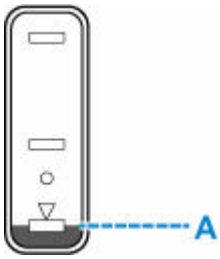

Important

- If the function for notifying the remaining ink level (remaining ink level notification function) is enabled, resetting the remaining ink level count is required after refilling ink tanks up to the upper limit line.

  If the remaining ink level count is reset when the ink tanks are not full, the printer cannot detect the ink level correctly.

  From the printer

  ➡ Ink level monitor

  From the computer

  ➡ Changing the remaining ink level notification setting
- If the remaining ink level notification function is disabled, visually inspect the remaining ink and refill the ink tanks as necessary. Continuing printing with ink below the lower limit line of an ink tank may prevent satisfactory print quality.

Note

- If print results become faint or streaks appear despite sufficient ink levels, see Maintenance Procedure.
- For precautionary notes on handling ink bottles, see Notes on ink bottles.

Refilling Procedure

When you refill ink tanks, follow the steps below.

Important

- Please ensure the printer remains flat after initial setup and is NOT turned upside down or on its side, as ink in the printer may leak.

1. Check that printer is turned on.

2. Open the top cover (B).

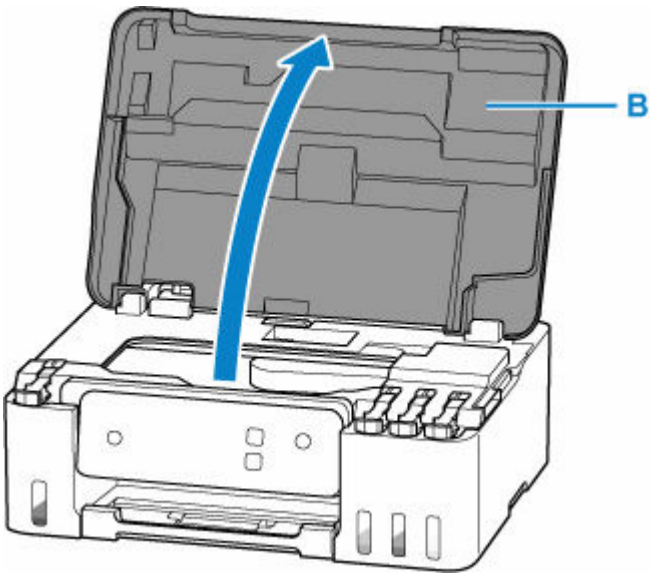

Important

- Do not touch tubes or other parts inside the printer. This can cause trouble with the printer.

3. Open the tank cap (C) of the ink tank to be refilled.

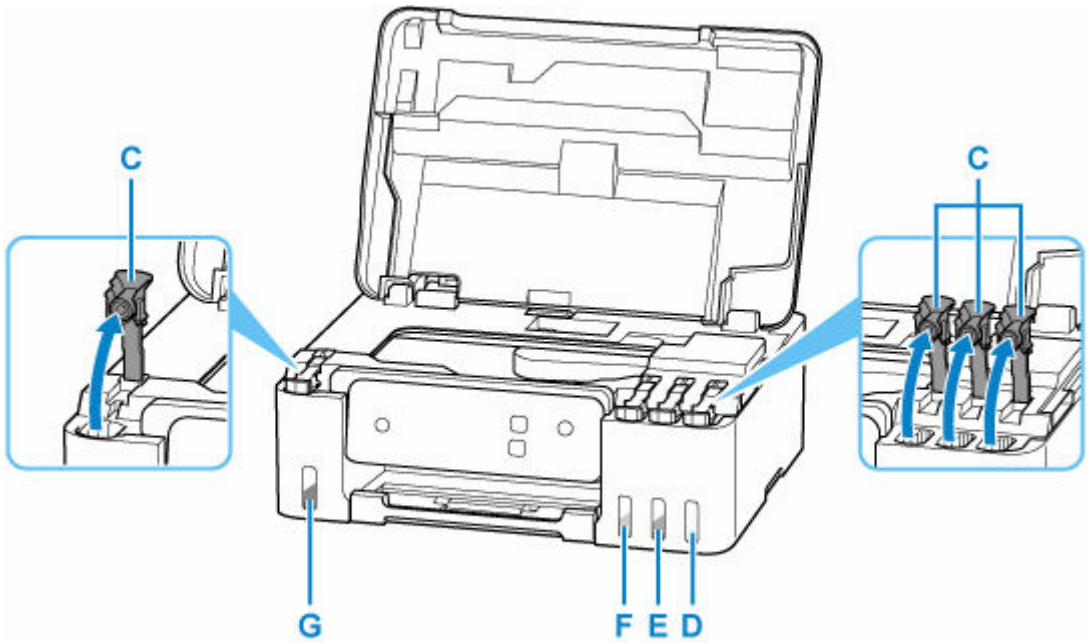

D: Yellow
E: Magenta
F: Cyan
G: Black

Important

- Carefully open the tank cap of the ink tank. Ink on the inside of the tank cap may spatter when opening it.

4. Hold the ink bottle upright and gently twist the bottle cap (H) to remove.

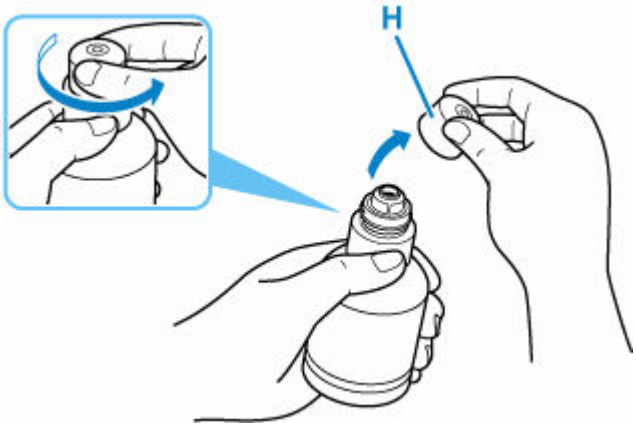

Important

- Do not shake the ink bottle. Ink may spatter when opening the cap.

5. Refill the ink tank.

Aligning the ink bottle's tip with the ink tank's inlet (I), slowly stand the bottle upside down, and push the bottle into the inlet.

The ink tank is refilled. Support the bottle with your hand so that it does not fall.

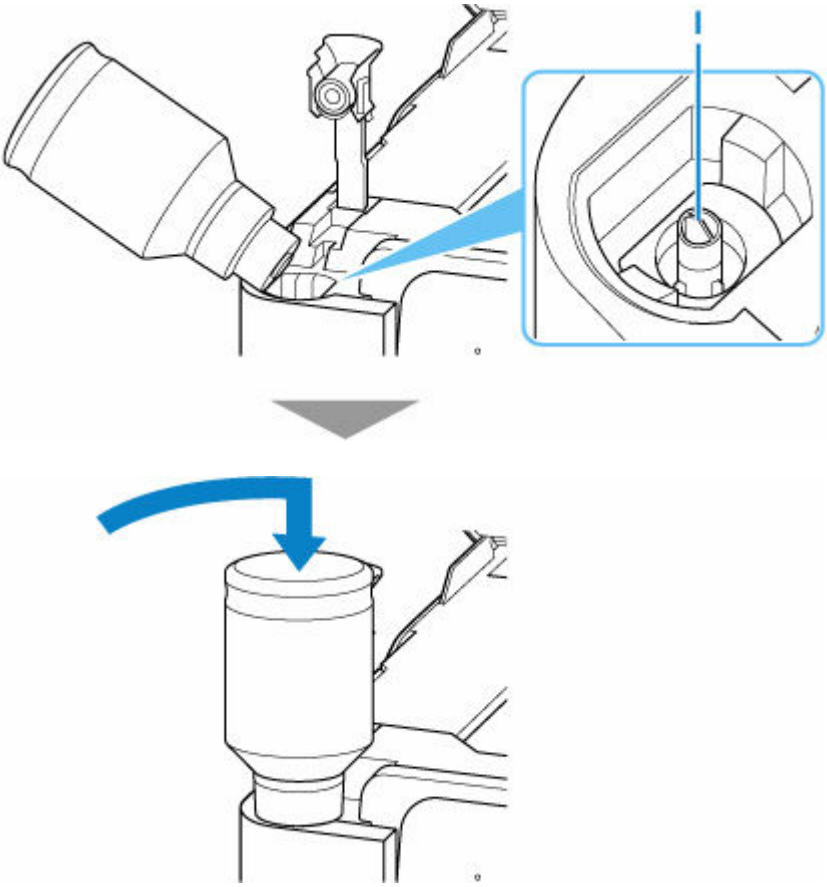

Important

- Make sure that each color of ink tanks is filled with corresponding color of ink bottles.

- If ink is not injected into the ink tank, slowly remove and insert the ink bottle.
- Make sure to refill the ink tank with ink up to the upper limit line (J) on the ink tank.

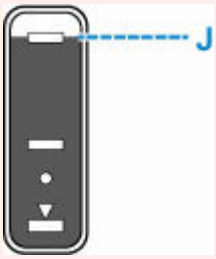

6. Once ink reaches the upper limit line, remove the ink bottle from the inlet.

Hold up the ink bottle slightly and remove the bottle from the inlet while slowly tilting it.

Important

- Do not leave ink bottles in ink tanks.
- Close the bottle cap of the ink bottle securely and store the ink bottle upright.

7. Close the tank cap of the ink tank.

Make sure the tank cap is completely inserted.

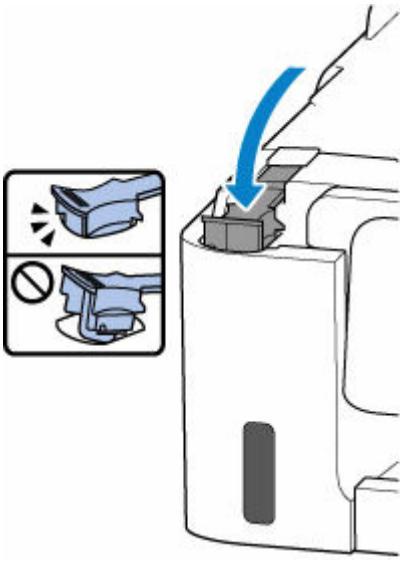

8. Close the top cover.

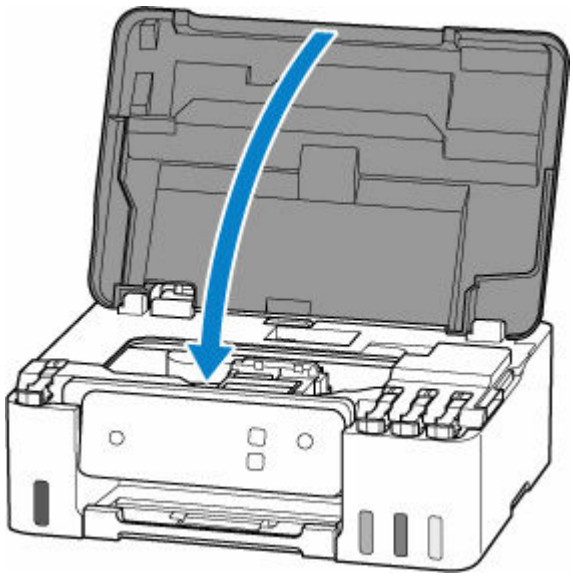

Notes on ink bottles

Important

- Keep out of reach of children.
- Do not drink ink.
- If ink is accidentally licked or swallowed, rinse out your mouth or drink one or two glasses of water and obtain medical advice immediately. If ink gets into your eyes, flush them with water right away, and obtain medical advice immediately.
- If ink gets on your skin, wash the area with soap and water immediately. If irritation to your skin persists, obtain medical advice immediately.
- When you store ink bottles, close bottle caps completely and place bottles in standing position. If the ink bottles are laid down, ink may leak.
- When refilling ink tanks, take sufficient care to prevent ink from spattering onto surroundings.
- Ink may stain clothes or other belongings permanently. Washing may not remove ink stains.
- Do not use ink bottles and ink contained therein except to refill tanks of printers specified by Canon.
- Do not leave ink bottles in areas exposed to high temperature, such as near fire or a heater or in a car. Bottles may warp and cause ink leakage or ink may become poor quality.
- Do not subject ink bottles to impacts. Ink bottles may be damaged or bottle caps may come off by such impact, and ink may leak.
- Do not transfer ink to other containers. This may result in accidental ingestion, inappropriate use, or poor ink quality.
- Do not mix ink with water or other ink. This may damage the printer.
- Once an ink bottle has been opened, do not leave it with bottle cap off. Ink will dry out, possibly preventing proper operation of the printer when an ink tank is refilled using this bottle.
- To obtain optimum print quality, we recommend to refill the ink tank with ink up to the upper limit line at least once a year.

Note

- Color ink may be consumed even when printing a black-and-white document or when black-and-white printing is specified. Every ink is also consumed in the standard cleaning and deep cleaning of the print head, which may be necessary to maintain the performance of the printer.

  When ink runs low, promptly refill it.

  ➡ Ink Tips

Checking Ink Level

Check ink level with the ink tank indicator on the front of the printer.

When ink reaches the upper limit line (A), ink is full.

When ink is near the lower limit line (B), ink is running low. Refill the ink tank.

Note

- To check the remaining ink level, visually inspect the remaining ink in the ink tank.

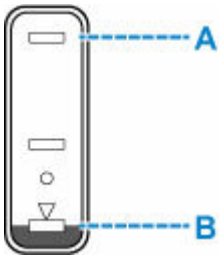

Important

- If printing is continued when the remaining ink level is below the lower limit line, the printer may consume a certain amount of ink to return to printable status.

Note

- This printer has a function for notifying the remaining ink level, called the remaining ink level notification function. If you refill the ink tank when the remaining ink level notification function is enabled or when a remaining ink error occurs, refill the ink tank until the ink reaches the upper limit line. If ink does not reach the upper limit line, the remaining ink level is not detected correctly.

  For details on the remaining ink level notification function, see below.

  ➡ Ink level monitor

- If a remaining ink error occurs, the **Alarm** lamp lights.

  ➡ When Error Occurred

- The remaining ink level notification function works from initial printing to the time when one of the inks reaches the lower limit line shown on the ink tank. For the remaining ink level notification function to work appropriately, each ink tank must be filled with entire contents of the corresponding color ink bottle bundled with the printer before printing. After the initial filling, if either of the ink tanks is refilled before the remaining ink level reaches the lower limit line, a significant error may occur in the accuracy of the remaining ink level notification function. If you want to refill an ink tank before the remaining ink level reaches the lower limit line, be sure to follow the procedure in the manual.
- To ensure you receive premium print quality and to help protect your print head, a certain amount of ink remains in the ink tank when the printer indicates to refill the ink tank. The estimated page yields of the ink bottle do not include this amount.
- Ink flows from the ink tanks to the inside of the printer. Ink may seem to run out fast due to this procedure when you start using the printer or after transporting it.

Ink Tips

How is ink used for various purposes other than printing?

Ink may be used for purposes other than printing.

During initial setup, some of the ink from the bundled ink bottles is used to fill the print head's nozzles to ensure the printer is print-ready.

Therefore, the page yield of the initial bundled set of ink bottles is lower than that of the subsequent sets of bottles.

To keep printer's performance, Canon printer performs cleaning automatically according to its condition. When the printer performs cleaning, a small amount of ink is consumed. In this case, all colors of ink may be consumed.

[Cleaning function]

The cleaning function helps the printer to suck air bubbles or ink itself from the nozzle and thus prevents print quality degradation or nozzle clogging.

Important

- The used ink is ejected into the maintenance cartridge. When the maintenance cartridge becomes full, replacement is necessary. If a message is displayed indicating that the maintenance cartridge is nearly full, replace the maintenance cartridge as soon as possible.

  ➡ Replacing the Maintenance Cartridge

Does black-and-white printing use color ink?

Black-and-white printing may use ink other than black ink depending on the type of printing paper or the settings of the printer driver. So, color ink is consumed even when printing in black-and-white.

Similarly, color inks are also consumed along with black ink during print head cleaning when Black is specified for cleaning.

If Printing Is Faint or Uneven

- Maintenance Procedure
- Printing the Nozzle Check Pattern
- Examining the Nozzle Check Pattern
- Cleaning the Print Head

Maintenance Procedure

If print results are blurred, colors are not printed correctly, or print results are unsatisfactory (e.g. misaligned printed ruled lines), perform the maintenance procedure below.

Important

- Do not rinse or wipe the print head. This can cause trouble with the print head.

Note

- Check if ink remains in the ink tanks.
  - ➡ Checking Ink Level
- For Windows, increasing the print quality in the printer driver settings may improve the print result.
  - ➡ Set Media Type, Quality, etc. (Media/Quality Tab)

When the Print Results Are Blurred or Uneven:

Step 1 Print the nozzle check pattern.

From the printer

➡ Printing the Nozzle Check Pattern

From the computer

- For Windows:
  - ➡ Printing a Nozzle Check Pattern
- For macOS:
  - ➡ Printing a Nozzle Check Pattern

Step 2 Examine the nozzle check pattern.

If there are missing lines or horizontal streaks in the pattern:

Step 3 Clean the print head.

From the printer

➡ Cleaning the Print Head

From the computer

- For Windows:
  - ➡ Cleaning the Print Heads
- For macOS:
  - ➡ Cleaning the Print Heads

After cleaning the print head, print and examine the nozzle check pattern: ➡ Step 1

If the problem is not resolved after performing from step 1 to step 3 twice:

Step 4 Clean the print head deeply.

- For Windows:
  - ➡ Cleaning the Print Heads
- For macOS:
  - ➡ Cleaning the Print Heads

After deep print head cleaning, print and examine the nozzle check pattern: ➡ Step 1

When you have performed the procedure until step 4 and the problem has not been resolved, turn off the power and clean the print head deeply again after 24 hours.

If the problem is still not resolved, replace ink in print head.

Important

- Replace ink in print head consumes a great amount of ink. Frequent replace ink in print head can rapidly consume ink, so replace ink in print head only when necessary.
- Be sure to check the remaining ink level before replacing ink in print head.

➡ Replace Ink in Print Head

If the nozzle check pattern is not printed correctly even after replacing ink in print head, see Check Installation of Print Head.

When the Print Results Are Not Even such as the Ruled Lines Are Misaligned:

Step Align the print head.

- For Windows:
  - ➡ Adjusting Print Head Position
- For macOS:
  - ➡ Adjusting Print Head Position

Printing the Nozzle Check Pattern

Print the nozzle check pattern to determine whether the ink ejects properly from the print head nozzle.

Note

- If the remaining ink level is low, the nozzle check pattern will not be printed correctly. Refill the ink tanks whose ink is low.

You need to prepare: a sheet of A4 or Letter-sized plain paper

1. Check that printer is turned on.

2. Load a sheet of A4 or Letter-sized plain paper in the rear tray.

   ➡ Loading Photo Paper / Plain Paper

3. Press and hold the **Stop** button and release it when the **Alarm** lamp flashes 2 times.

   The nozzle check pattern will be printed.

   Do not perform any other operations until the printer completes the printing of the nozzle check pattern.

4. Examine the nozzle check pattern.

Examining the Nozzle Check Pattern

Examine the nozzle check pattern, and clean the print head if necessary.

Check if there are missing lines in the pattern A or horizontal streaks in the pattern B.

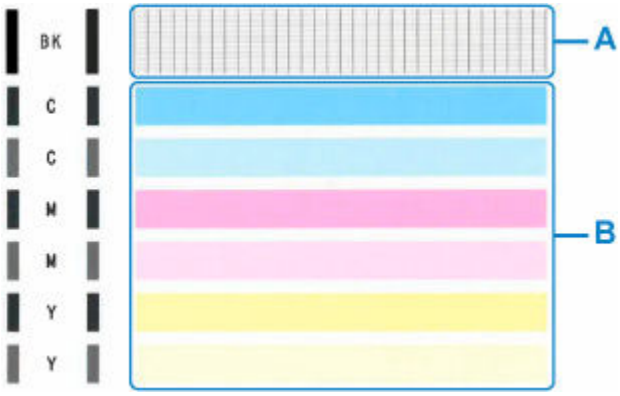

If there are missing lines in the pattern A:

C: Good
D: Bad (lines are missing)

If there are horizontal streaks in the pattern B:

E: Good
F: Bad (horizontal streaks are present)

If any color in the pattern A or the pattern B is not printed:

(Example: Magenta pattern is not printed)

If one of the above is applied, cleaning the print head is required.

Cleaning the Print Head

Clean the print head if lines are missing or if horizontal streaks are present in the printed nozzle check pattern. Cleaning unclogs the nozzles and restores the print head condition. Cleaning the print head consumes ink, so clean the print head only when necessary.

1. Check that printer is turned on.

2. Press and hold the **Stop** button and release it when the **Alarm** lamp flashes once.

   The printer starts cleaning the print head.

   The cleaning will be complete when the **ON** lamp lights after flashing.

   Do not perform any other operations until the printer completes the cleaning of the print head. This takes about 1 to 2 minutes.

3. Check the print head condition.

   To check the print head condition, print the nozzle check pattern.

Note

- If the problem is not resolved after cleaning the print head twice, clean the print head deeply.
  - Cleaning the Print Heads (Windows)
  - Cleaning the Print Heads (macOS)

Performing Maintenance Functions from Your Computer (macOS)

- Opening Remote UI for Maintenance
- Cleaning the Print Heads
- Adjusting Print Head Position

Opening Remote UI for Maintenance

You can perform maintenance of printer and change the settings from a Remote UI.
The following is the procedure to open a Remote UI.

1. Open **System Preferences**, and select **Printers & Scanners**

2. Select your model from the printer list, and click **Options & Supplies...**

3. Click **Show Printer Webpage...** in **General** tab

   Remote UI starts.

   Note

   - The password may have to be entered after Remote UI starts. In such a case, enter the password and click **OK**. In case you do not know the password, see "Passwords and cookies."

Related Topics

- Cleaning the Print Heads
- Adjusting Print Head Position
- Printing a Nozzle Check Pattern
- Managing the Printer Power
- Changing the Printer Operation Mode
- Reducing the Printer Noise

Cleaning the Print Heads

The print head Cleaning and Deep Cleaning functions allow you to clear up clogged print head nozzles. Perform print head Cleaning if printing results are not satisfactory or if a specific color fails to print, even though there is enough ink.

Cleaning

1. Select **Utilities** from Remote UI

2. Click **Cleaning**

   Before performing Cleaning, check that the printer power is on.
   Check the following. Then, if necessary, perform Cleaning.

   - Is there ink remaining?

3. Perform Cleaning

   Click **Yes**.

   Print head Cleaning starts.

4. Complete Cleaning

   Next, the message for Nozzle Check pattern printing is displayed.

5. Check the results

   To check whether the print quality has improved, click **Yes**. To cancel the check process, click **No**.

   If cleaning the head once does not resolve the print head problem, clean it once more.

Important

- **Cleaning** consumes a small amount of ink.
  Cleaning the print head frequently will rapidly deplete your printer's ink supply. Perform Cleaning only when necessary.

Deep Cleaning

Deep Cleaning is more thorough than Cleaning. Perform Deep Cleaning when two **Cleaning** attempts do not resolve the print head problem.

1. Select **Utilities** from Remote UI

2. Click **Deep Cleaning**

   Before performing Deep Cleaning, check that the printer power is on.
   Check the following. Then, if necessary, perform Deep Cleaning.

   - Is there ink remaining?

3. Perform Deep Cleaning

   Click **Yes**.

   Print head Deep Cleaning starts.

4. Complete Deep Cleaning

   Next, the message for Nozzle Check pattern printing is displayed.

5. Check the results

   To check whether the print quality has improved, click **Yes**. To cancel the check process, click **No**.

Important

- **Deep Cleaning** consumes a larger amount of ink than **Cleaning**.
  Cleaning the print head frequently will rapidly deplete your printer's ink supply. Perform Deep Cleaning only when necessary.
- If print results do not improve even after performing **Deep Cleaning**, turn off the power, wait 24 hours without pulling out the power plug, and then perform **Deep Cleaning** again. If print results still do not improve, perform **Replace Ink in Print Head**.
  Replace Ink in Print Head uses a large volume of ink.

Related Topic

➡ Printing a Nozzle Check Pattern

Adjusting Print Head Position

Any error in the print head installation position can cause color and line shifts. Adjusting the print head position improves print results.

Manual head alignment

1. Select **Utilities** from Remote UI

2. Click **Manual head alignment**

   A message appears.

3. Load paper in printer

   Load three sheets of A4 size or Letter size plain paper into the rear tray.

4. Run head position adjustment

   Check that the printer power is on, and then click **Yes**.
   Head alignment starts. Proceed with the operations in accordance with the messages on the screen.

   Important

   - Do not open the top cover while printing is in progress; otherwise, printing will stop.

Note

- You can print and check the current settings by clicking on **Print the head alignment value**.

Cleaning

- Cleaning Exterior Surfaces
- Cleaning Paper Feed Rollers
- Cleaning Inside the Printer (Bottom Plate Cleaning)

Cleaning Paper Feed Rollers

If a paper feed roller is dirty or paper powder is attached to it, paper may not be fed properly. In this case, perform Roller Cleaning. Cleaning will cause wear on rollers, so perform this only when necessary.

You need to prepare: three sheets of A4 or Letter-sized plain paper

1. Check that printer is turned on.

2. Remove any paper from the rear tray.

3. Press and hold the **Stop** button and release it when the **Alarm** lamp flashes 3 times.

   The paper feed rollers will rotate as they are cleaned without paper.

4. Make sure that the paper feed roller has stopped rotating, load three sheets of A4 or Letter-sized plain paper on the rear tray.

   ➡ Loading Photo Paper / Plain Paper

5. Press and hold the **Stop** button and release it when the **Alarm** lamp flashes 3 times.

   The printer starts cleaning. The cleaning will be complete when the paper is ejected.

If the problem is still not resolved with the operation described above, follow the operation below.

1. Turn off the power and then unplug the power cord.
2. Open the top cover.
3. While rotating the paper feed roller (A) located inside the rear tray more than two full turns, wipe it with a well wrung out damp cloth.

   Do not touch the roller with your fingers. Paper feeding performance may be degraded.

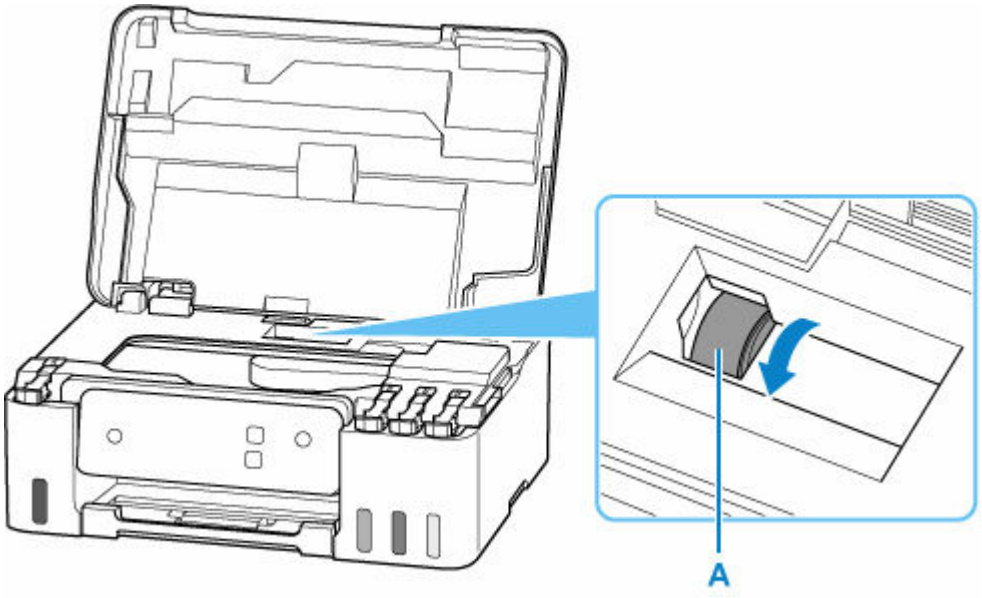

If the problem is not resolved after cleaning, contact Canon to request a repair.

Cleaning Inside the Printer (Bottom Plate Cleaning)

Remove stains from the inside of the printer. If the inside of the printer becomes dirty, printed paper may get dirty, so we recommend performing cleaning regularly.

You need to prepare: a sheet of A4 or Letter-sized plain paper*

* Be sure to use a new piece of paper.

1. Check that printer is turned on.

2. Remove any paper from the rear tray.

3. Fold a single sheet of A4 or Letter-sized plain paper in half widthwise, then unfold the paper.

4. Fold one side of the opened paper in another half, aligning the edge with the center crease, unfold the paper.

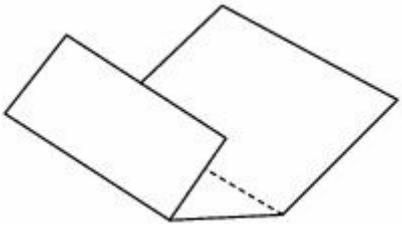

5. Load only this sheet of paper on the rear tray so that the wider folding margin is put down with the opened surface (valley fold) upward.

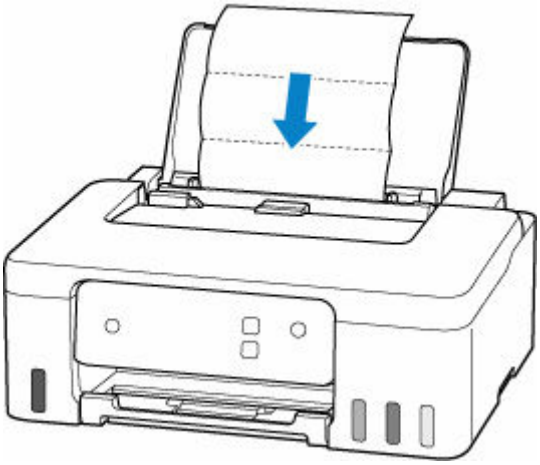

6. Pull out the paper output tray (A) and open the output tray extension (B).

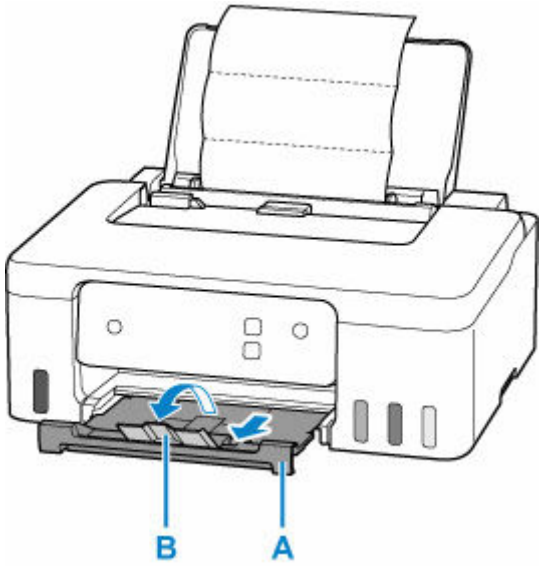

7. Press and hold the **Stop** button and release it when the **Alarm** lamp flashes 4 times.

   The paper cleans the inside of the printer as it feeds through the printer.

   Check the folded parts of the ejected paper. If they are smudged with ink, perform Bottom Plate Cleaning again.

   Note

   - When performing Bottom Plate Cleaning again, be sure to use a new piece of paper.

If the problem is not resolved after performing cleaning again, the protrusions inside the printer may be stained. Wipe off any ink from the protrusions using a cotton swab or the like.

Important

- Be sure to turn off the power and unplug the power cord before cleaning the printer.

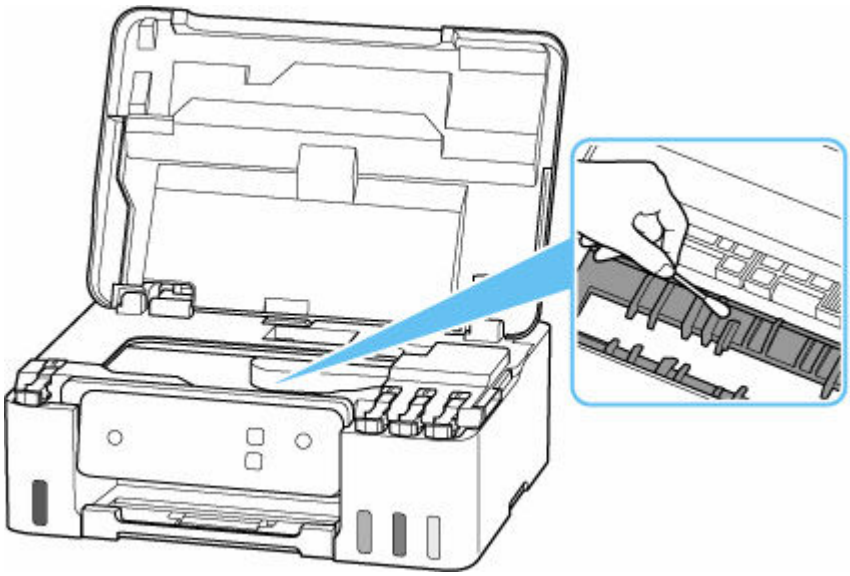

Replacing the Maintenance Cartridge

In case of cautions or errors concerning the maintenance cartridge, the **Alarm** lamp of the printer lights or flashes and a message is displayed on the computer screen. Check the **Alarm** lamp status and message and take appropriate action for the error.

➡ When Error Occurred

Important

- If a message is displayed indicating that the maintenance cartridge is nearly full, replace the maintenance cartridge as soon as possible. If the maintenance cartridge becomes full, an error message is displayed and the printer stops working until the cartridge is replaced with a new one.
- Do not touch the terminal (A) or opening (B) of the maintenance cartridge.

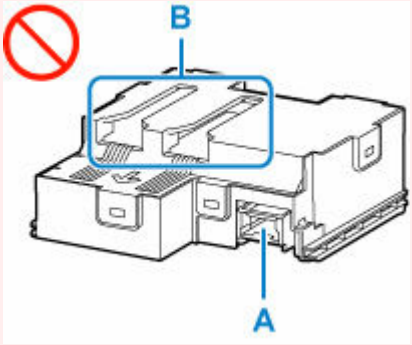

Note

- Use a maintenance cartridge with the model number below.

  Maintenance Cartridge MC-G04

1. Prepare a new maintenance cartridge.

   Remove the maintenance cartridge and the attached plastic bag from the package.

2. Turn the printer off.

3. Remove the coin screw from the maintenance cover (C).

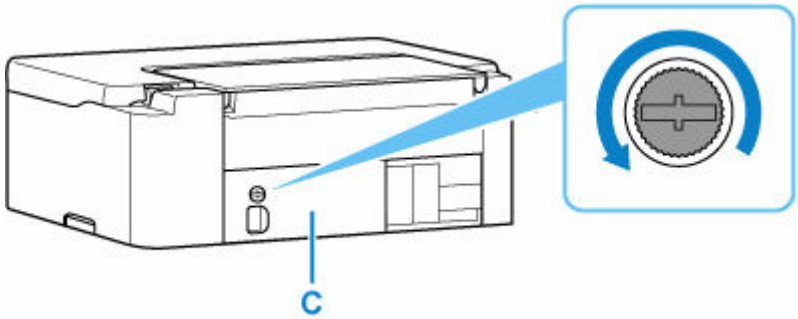

4. Remove the maintenance cover.

Put your finger on the hole of the maintenance cover and remove it.

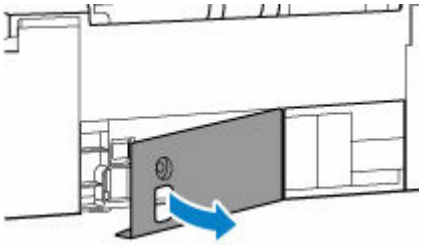

5. Pull out the maintenance cartridge until it stops.

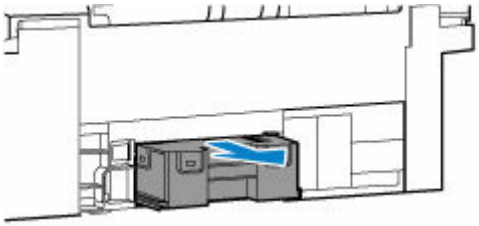

6. Lift the maintenance cartridge a little and pull it out.

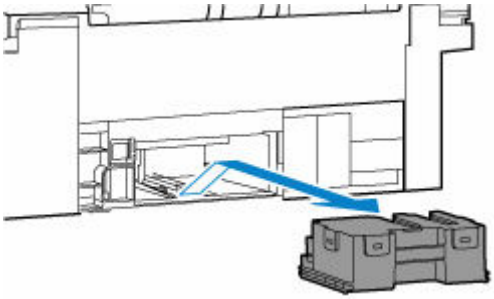

Important

- Do not drop the removed maintenance cartridge as ink may spill.

  Do not place the removed maintenance cartridge on a desk or other surface, as there may be ink on the bottom of the cartridge.

- To prevent ink from leaking, do not tilt the removed maintenance cartridge or turn it upside down.

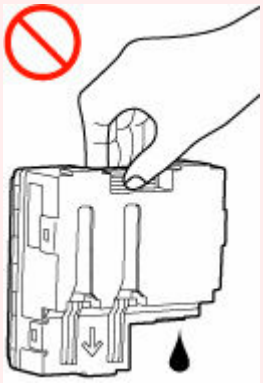

- Put the used one immediately into the plastic bag that came with the new maintenance cartridge and seal the bag by tying the opening tightly to prevent the ink from leaking.

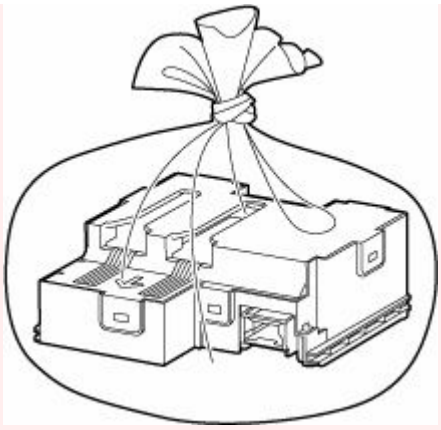

- Do not put your hands inside the printer, as ink may adhere to your hands.

7. Insert the new maintenance cartridge straight until it stops.

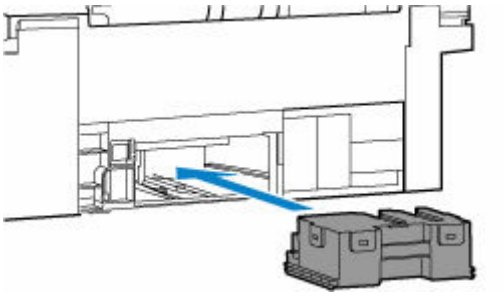

8. Attach the maintenance cover.

Align the tab on the back of the maintenance cover with the hole on the printer and close it.

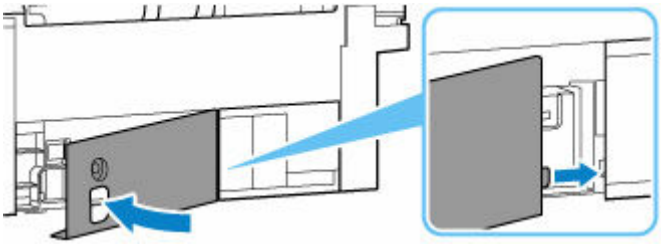

9. Secure with the coin screw.

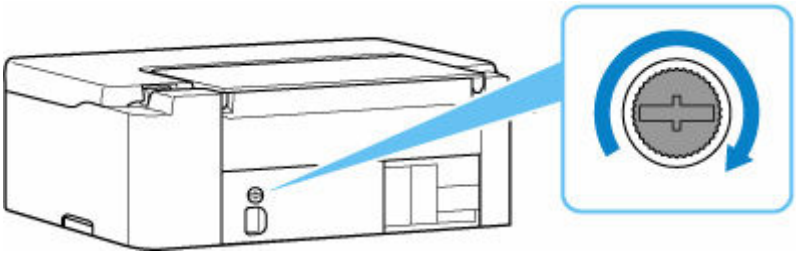

10. Turn the printer on.

Overview

- **Safety**
  - Safety Precautions
  - Regulatory Information
  - WEEE
- **Handling Precautions**
  - Canceling Print Jobs
  - Legal Restrictions on Printing
  - Printer Handling Precautions
  - Transporting Your Printer
  - When Repairing, Lending, or Disposing of the Printer
  - Keeping Print Quality High
- **Main Components and Their Use**
  - Main Components
  - Power Supply
- **Changing Settings**
  - Changing Printer Settings from Your Computer (Windows)
  - Changing Printer Settings from Your Computer (macOS)
  - Changing Settings from Operation Panel
  - Handling Printer Configuration Using the Web Browser
- **Specifications**

Safety

- Safety Precautions
- Regulatory Information
- WEEE

Safety Precautions

Safety Precautions

- This manual contains important notices and safety precautions about your printer.

  Do not use the printer in ways other than described in the accompanying manuals, as this may result in fire, electric shock or other unexpected accidents.

  Safety standard marks and declarations are only valid for the supported voltages and frequencies in the applicable countries or regions.

⚠ Warning

- Do not use the printer in the following cases:

  Stop use immediately, unplug the printer and call your local service representative to request repair.

  - Metal objects or liquids are spilt inside the printer.
  - The printer emits smoke, strange odors, or makes unusual noises.
  - The power cord or plug overheat or are broken, bent or damaged in any way.

- Failure to adhere to the following may result in fire, electric shock, or injury:
  - Do not place product close to the flammable solvents such as alcohol or thinner.
  - Do not open or modify the printer.
  - Use only the power cord/cables that came with your printer. Do not use these cables with other devices.
  - Do not plug in to voltages or frequencies other than those specified.
  - Plug the power cord into the socket completely.
  - Do not plug in or unplug the power cord with wet hands.
  - Do not damage the power cord or other cables by twisting, bundling, tying, pulling or excessively bending them.
  - Do not place heavy objects on the power cord.
  - Do not connect multiple power cords to a single electrical outlet. Do not use multiple extension cords.
  - Do not leave the printer plugged in during lightning storms.
  - Always unplug the power cord and cables when cleaning. Do not use flammable sprays or liquids such as alcohol or thinners for cleaning.
  - Unplug the power cord once a month to check that it is not overheating, rusted, bent, scratched, split, or otherwise damaged.

⚠ Caution

- Do not put your hands inside the printer while printing.
- Do not touch the metal parts of the print head immediately after printing.
- Ink bottles
  - Keep out of reach of children.
  - Do not drink ink.
    If ink is accidentally licked or swallowed, rinse out your mouth or drink one or two glasses of water and obtain medical advice immediately.
    If ink gets into your eyes, flush them with water right away, and obtain medical advice immediately.

- If ink gets on your skin, wash the area with soap and water immediately. If irritation to your skin persists, obtain medical advice immediately.
- When you store ink bottles, close bottle caps completely and place bottles in standing position. If the ink bottles are laid down, ink may leak.
- When refilling ink tanks, take sufficient care to prevent ink from spattering onto surroundings.
- Ink may stain clothes or other belongings permanently. Washing may not remove ink stains.
- Do not leave ink bottles in areas exposed to high temperature, such as near fire or a heater or in a car. Bottles may warp and cause ink leakage or ink may become poor quality.
- Do not subject ink bottles to impacts. Ink bottles may be damaged or bottle caps may come off by such impact, and ink may leak.
- Do not transfer ink to other containers. This may result in accidental ingestion, inappropriate use, or poor ink quality.

• Moving the printer
  - Hold the printer by its sides and carry it with both hands.

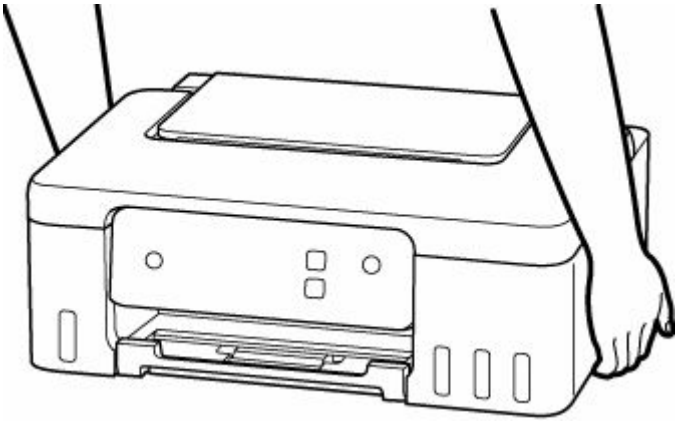

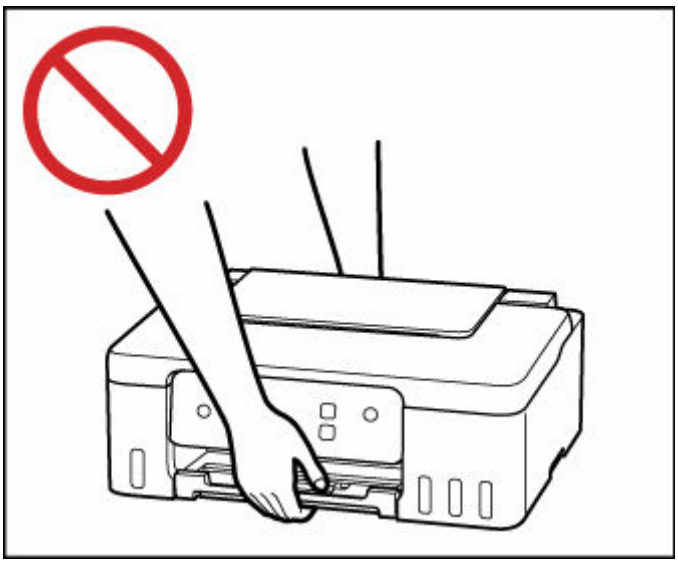

General Notices

Choosing a Location

Refer to "Specifications" in the Online manual for details on operating environment.

- Do not install the printer in a location that is unstable or subject to excessive vibration.
- Do not install the printer in locations that get very hot (direct sunlight, or close to a heating source), very humid or dusty locations, or outdoors.
- Do not place the printer on a thick rug or carpet.
- Do not place the printer flush against a wall.

Power Supply

- Keep the area around the power outlet clear at all times so you can easily unplug the power cord if necessary.
- Never remove the plug by pulling on the cord.

General Notices

- Do not tilt the printer, stand it on end, or turn it upside down. This may cause ink to leak.
- Do not place anything on top of the printer. Be especially careful to avoid metal objects such as paper clips and staples, and containers holding flammable liquids such as alcohol or thinner.
- Modifying or dismantling the print head or ink bottles, such as by putting holes in them, could cause the ink to leak out and cause a malfunction. We recommend that you do not modify or dismantle them.
- Do not put the print head or ink bottles into a fire.

Regulatory Information

Users in the U.S.A.

FCC Notice (U.S.A. Only)
For 120V, 60Hz model
Model Number: K10557

This device complies with Part 15 of the FCC Rules. Operation is subject to the following two conditions: (1) This device may not cause harmful interference, and (2) this device must accept any interference received, including interference that may cause undesired operation.

Note: This equipment has been tested and found to comply with the limits for a Class B digital device, pursuant to Part 15 of the FCC Rules. These limits are designed to provide reasonable protection against harmful interference in a residential installation. This equipment generates, uses and can radiate radio frequency energy and, if not installed and used in accordance with the instructions, may cause harmful interference to radio communications.
However, there is no guarantee that interference will not occur in a particular installation. If this equipment does cause harmful interference to radio or television reception, which can be determined by turning the equipment off and on, the user is encouraged to try to correct the interference by one or more of the following measures:

- Reorient or relocate the receiving antenna.
- Increase the separation between the equipment and receiver.
- Connect the equipment into an outlet on a circuit different from that to which the receiver is connected.
- Consult the dealer or an experienced radio/TV technician for help.

Use of a shielded cable is required to comply with Class B limits in Subpart B of Part 15 of the FCC Rules.

Do not make any changes or modifications to the equipment unless otherwise specified in the manual. If such changes or modifications should be made, you could be required to stop operation of the equipment.

Canon U.S.A., Inc.
One Canon Park
Melville, New York 11747
1-800-652-2666

Users in Europe

Product Information for the requirement of COMMISSION REGULATION (EU)

The power consumption in Off Mode or network standby and the transition time to Off or network standby are as follows:
https://www.canon-europe.com/consumer/lot26/

Interference

Do not use the printer around medical equipment or other electronic devices. Signals from the printer may interfere with the correct operation of these devices.

WEEE

Only for the United Kingdom

This symbol indicates that this product is not to be disposed of with your household waste, according to the UK Waste Electrical and Electronic Equipment Regulations. This product should be handed over to a designated collection point, e.g., on an authorized one-for-one basis when you buy a new similar product or to an authorized collection site for recycling waste electrical and electronic equipment (EEE). Improper handling of this type of waste could have a possible negative impact on the environment and human health due to potentially hazardous substances that are generally associated with EEE. At the same time, your cooperation in the correct disposal of this product will contribute to the effective usage of natural resources. For more information about where you can drop off your waste equipment for recycling, please contact your local city office, waste authority, approved WEEE scheme or your household waste disposal service. For more information regarding return and recycling of WEEE products, please visit www.canon-europe.com/sustainability/approach/.

Only for European Union and EEA (Norway, Iceland and Liechtenstein)

This symbol indicates that this product is not to be disposed of with your household waste, according to the WEEE Directive (2012/19/EU) and national legislation. This product should be handed over to a designated collection point, e.g., on an authorized one-for-one basis when you buy a new similar product or to an authorized collection site for recycling waste electrical and electronic equipment (EEE). Improper handling of this type of waste could have a possible negative impact on the environment and human health due to potentially hazardous substances that are generally associated with EEE. At the same time, your cooperation in the correct disposal of this product will contribute to the effective usage of natural resources. For more information about where you can drop off your waste equipment for recycling, please contact your local city office, waste authority, approved WEEE scheme or your household waste disposal service. For more information regarding return and recycling of WEEE products, please visit www.canon-europe.com/weee.

Nur für Europäische Union und EWR (Norwegen, Island und Liechtenstein)

Dieses Symbol weist darauf hin, dass dieses Produkt gemäß der EU-Richtlinie über Elektro- und Elektronik-Altgeräte (2012/19/EU) und nationalen Gesetzen nicht über den Hausmüll entsorgt werden

darf. Dieses Produkt muss bei einer dafür vorgesehenen Sammelstelle abgegeben werden. Dies kann z. B. durch Rückgabe beim Kauf eines ähnlichen Produkts oder durch Abgabe bei einer autorisierten Sammelstelle für die Wiederaufbereitung von Elektro- und Elektronik-Altgeräten geschehen. Der unsachgemäße Umgang mit Altgeräten kann aufgrund potentiell gefährlicher Stoffe, die generell mit Elektro- und Elektronik-Altgeräten in Verbindung stehen, negative Auswirkungen auf die Umwelt und die menschliche Gesundheit haben. Durch die umweltgerechte Entsorgung dieses Produkts tragen Sie außerdem zu einer effektiven Nutzung natürlicher Ressourcen bei. Informationen zu Sammelstellen für Altgeräte erhalten Sie bei Ihrer Stadtverwaltung, dem öffentlich-rechtlichen Entsorgungsträger, einer autorisierten Stelle für die Entsorgung von Elektro- und Elektronik-Altgeräten oder Ihrem örtlichen Entsorgungsunternehmen. Weitere Informationen zur Rückgabe und Entsorgung von Elektro- und Elektronik-Altgeräten finden Sie unter www.canon-europe.com/weee.

Zusatzinformationen für Deutschland:

Dieses Produkt kann durch Rückgabe an den Händler unter den in der Verordnung des Elektro- und Elektronikgerätegesetzes beschriebenen Bedingungen abgegeben werden.
Als Endbenutzer und Besitzer von Elektro- oder Elektronikgeräten sind Sie verpflichtet:

- diese einer vom unsortierten Siedlungsabfall getrennten Erfassung zuzuführen,
- Altbatterien und Altakkumulatoren, die nicht von Altgerät umschlossen sind, sowie Lampen, die zerstörungsfrei aus dem Altgerät entnommen werden können, vor der Abgabe an einer Erfassungsstelle vom Altgerät zerstörungsfrei zu trennen,
- personenbezogener Daten auf den Altgeräten vor der Entsorgung zu löschen.

Die Bedeutung von dem Symbol der durchgestrichenen Abfalltonne auf Rädern finden Sie oben in dieser Beschreibung.

Die Vertreiber von Elektro- oder Elektronikgeräten haben die Pflicht zur unentgeltlichen Rücknahme von Altgeräten. Die Vertreiber haben die Endnutzer über die von ihnen geschaffenen Möglichkeiten der Rückgabe von Altgeräten zu informieren.

Union Européenne, Norvège, Islande et Liechtenstein uniquement.

Ce symbole indique que ce produit ne doit pas être jeté avec les ordures ménagères, conformément à la directive DEEE (2012/19/UE) et à la réglementation de votre pays. Ce produit doit être confié au distributeur à chaque fois que vous achetez un produit neuf similaire, ou à un point de collecte mis en place par les collectivités locales pour le recyclage des Déchets des Équipements Électriques et Électroniques (DEEE). Le traitement inapproprié de ce type de déchet risque d'avoir des répercussions sur l'environnement et la santé humaine, du fait de la présence de substances potentiellement dangereuses généralement associées aux équipements électriques et électroniques. Parallèlement, votre entière coopération dans le cadre de la mise au rebut correcte de ce produit favorisera une meilleure utilisation des ressources naturelles. Pour plus d'informations sur les points de collecte des équipements à recycler, contactez vos services municipaux, les autorités locales compétentes, le plan DEEE approuvé ou le service d'enlèvement des ordures ménagères. Pour plus d'informations sur le retour et le recyclage des produits DEEE, consultez le site: www.canon-europe.com/weee.

Uitsluitend bestemd voor de Europese Unie en EER (Noorwegen, IJsland en Liechtenstein)

Dit symbool geeft aan dat dit product in overeenstemming met de AEEA-richtlijn (2012/19/EU) en de nationale wetgeving niet mag worden afgevoerd met het huishoudelijk afval. Dit product moet worden ingeleverd bij een aangewezen, geautoriseerd inzamelpunt, bijvoorbeeld wanneer u een nieuw gelijksoortig product aanschaft, of bij een geautoriseerd inzamelpunt voor hergebruik van elektrische en elektronische apparatuur (EEA). Een onjuiste afvoer van dit type afval kan leiden tot negatieve effecten op het milieu en de volksgezondheid als gevolg van potentieel gevaarlijke stoffen die veel voorkomen in elektrische en elektronische apparatuur (EEA). Bovendien werkt u door een juiste afvoer van dit product mee aan het effectieve gebruik van natuurlijke hulpbronnen. Voor meer informatie over waar u uw afgedankte apparatuur kunt inleveren voor recycling kunt u contact opnemen met het gemeentehuis in uw woonplaats, de reinigingsdienst, of het afvalverwerkingsbedrijf. U kunt ook het schema voor de afvoer van afgedankte elektrische en elektronische apparatuur (AEEA) raadplegen. Ga voor meer informatie over het inzamelen en recyclen van afgedankte elektrische en elektronische apparatuur naar www.canon-europe.com/weee.

Sólo para la Unión Europea y el Área Económica Europea (Noruega, Islandia y Liechtenstein)

Este símbolo indica que este producto no debe desecharse con los desperdicios domésticos, de acuerdo con la directiva RAEE (2012/19/UE) y con la legislación nacional. Este producto debe entregarse en uno de los puntos de recogida designados, como por ejemplo, entregándolo en el lugar de venta al comprar un producto similar o depositándolo en un lugar de recogida autorizado para el reciclado de residuos de aparatos eléctricos y electrónicos (RAEE). La manipulación inapropiada de este tipo de desechos podría tener un impacto negativo en el entorno y la salud humana, debido a las sustancias potencialmente peligrosas que normalmente están asociadas con los RAEE. Al mismo tiempo, su cooperación a la hora de desechar correctamente este producto contribuirá a la utilización eficazde los recursos naturales. Para más información sobre cómo puede eliminar el equipo para su reciclado, póngase en contacto con las autoridades locales, con las autoridades encargadas de los desechos, con un sistema de gestión RAEE autorizado o con el servicio de recogida de basuras doméstico. Si desea más información acerca de la devolución y reciclado de RAEE, visite la web www.canon-europe.com/weee.

Només per a la Unió Europea i a l'Espai Econòmic Europeu (Noruega, Islàndia i Liechtenstein)

Aquest símbol indica que aquest producte no s'ha de llençar a les escombraries de la llar, d'acord amb la Directiva RAEE (2012/19/UE) i la legislació nacional. Aquest producte s'hauria de lliurar en un dels punts de recollida designats, com per exemple, intercanviant-lo un per un en comprar un producte similar o lliurant-lo en un lloc de recollida autoritzat per al reciclatge de residus d'aparells elèctrics i electrònics (AEE). La manipulació inadequada d'aquest tipus de residus podria tenir un impacte negatiu en l'entorn i en la salut humana, a causa de les substàncies potencialment perilloses que normalment estan associades als AEE. Així mateix, la vostra cooperació a l'hora de llençar correctament aquest producte contribuirà a la utilització efectiva dels recursos naturals. Per a més informació sobre els punts on podeu lliurar aquest producte per procedir al seu reciclatge, adreceu-vos a la vostra oficina municipal, a les autoritats encarregades dels residus, al pla de residus homologat per la RAEE o al servei de recollida de deixalles domèstiques de la vostra localitat. Per a més informació sobre la devolució i el reciclatge de productes RAEE, visiteu www.canon-europe.com/weee.

Solo per Unione Europea e SEE (Norvegia, Islanda e Liechtenstein)

Questo simbolo indica che il prodotto deve essere oggetto di raccolta separata in conformità alla Direttiva RAEE (2012/19/UE) e alla normativa locale vigente. Il prodotto deve essere smaltito presso un centro di raccolta differenziata, un distributore autorizzato che applichi il principio dell'"uno contro uno", ovvero del ritiro della vecchia apparecchiatura elettrica al momento dell'acquisto di una nuova, o un impianto autorizzato al riciclaggio dei rifiuti di apparecchiature elettriche ed elettroniche. La gestione impropria di questo tipo di rifiuti può avere un impatto negativo sull'ambiente e sulla salute umana causato dalle sostanze potenzialmente pericolose che potrebbero essere contenute nelle apparecchiature elettriche ed elettroniche. Un corretto smaltimento di tali prodotti contribuirà inoltre a un uso efficace delle risorse naturali ed eviterà di incorrere nelle sanzioni amministrative di cui all'art. 255 e successivi del Decreto Legislativo n. 152/06. Per ulteriori informazioni sullo smaltimento e il recupero dei Rifiuti di Apparecchiature Elettriche ed Elettroniche, consultare la Direttiva RAEE, rivolgersi alle autorità competenti, oppure visitare il sito www.canon-europe.com/weee.

Apenas para a União Europeia e AEE (Noruega, Islândia e Liechtenstein)

Este símbolo indica que o produto não deve ser colocado no lixo doméstico, de acordo com a Directiva REEE (2012/19/UE) e a legislação nacional. Este produto deverá ser colocado num ponto de recolha designado, por exemplo, num local próprio autorizado quando adquirir um produto semelhante novo ou num local de recolha autorizado para reciclar resíduos de equipamentos eléctricos e electrónicos (EEE). O tratamento inadequado deste tipo de resíduo poderá causar um impacto negativo no ambiente e na saúde humana devido às substâncias potencialmente perigosas normalmente associadas aos equipamentos eléctricos e electrónicos. Simultaneamente, a sua cooperação no tratamento correcto deste produto contribuirá para a utilização eficaz dos recursos naturais. Para mais informações sobre os

locais onde o equipamento poderá ser reciclado, contacte os serviços locais, a autoridade responsável pelos resíduos, o esquema REEE aprovado ou o serviço de tratamento de lixo doméstico. Para mais informações sobre a devolução e reciclagem de produtos REEE, vá a www.canon-europe.com/weee.

Gælder kun i Europæiske Union og EØS (Norge, Island og Liechtenstein)

Dette symbol angiver, at det pågældende produkt ikke må bortskaffes sammen med dagrenovation jf. direktivet om affald af elektrisk og elektronisk udstyr (WEEE) (2012/19/EU) og gældende national lovgivning. Det pågældende produkt skal afleveres på et nærmere specificeret indsamlingssted, f.eks. i overensstemmelse med en godkendt én-til-én-procedure, når du indkøber et nyt tilsvarende produkt, eller produktet skal afleveres på et godkendt indsamlingssted for elektronikaffald. Forkert håndtering af denne type affald kan medføre negative konsekvenser for miljøet og menneskers helbred på grund af de potentielt sundhedsskadelige stoffer, der generelt kan forefindes i elektrisk og elektronisk udstyr. Når du foretager korrekt bortskaffelse af det pågældende produkt, bidrager du til effektiv brug af naturressourcerne. Yderligere oplysninger om, hvor du kan bortskaffe dit elektronikaffald med henblik på genanvendelse, får du hos de kommunale renovationsmyndigheder. Yderligere oplysninger om returnering og genanvendelse af affald af elektrisk og elektronisk udstyr får du ved at besøge www.canon-europe.com/weee.

Μόνο για την Ευρωπαϊκή Ένωση και τον ΕΟΧ (Νορβηγία, Ισλανδία και Λιχτενστάιν)

Αυτό το σύμβολο υποδηλώνει ότι αυτό το προϊόν δεν πρέπει να απορρίπτεται μαζί με τα οικιακά απορρίμματα, σύμφωνα με την Οδηγία σχετικά με τα Απόβλητα Ηλεκτρικού και Ηλεκτρονικού Εξοπλισμού (ΑΗΗΕ) (2012/19/ΕΕ) και την εθνική σας νομοθεσία. Αυτό το προϊόν πρέπει να παραδίδεται σε καθορισμένο σημείο συλλογής, π.χ. σε μια εξουσιοδοτημένη βάση ανταλλαγής όταν αγοράζετε ένα νέο παρόμοιο προϊόν ή σε μια εξουσιοδοτημένη θέση συλλογής για την ανακύκλωση των αποβλήτων Ηλεκτρικού και Ηλεκτρονικού Εξοπλισμού (ΗΗΕ). Ο ακατάλληλος χειρισμός αυτού του τύπου αποβλήτων μπορεί να έχει αρνητικό αντίκτυπο στο περιβάλλον και την υγεία του ανθρώπου, λόγω δυνητικώς επικίνδυνων ουσιών που γενικά συνδέονται με τον ΗΗΕ. Ταυτόχρονα, η συνεργασία σας όσον αφορά τη σωστή απόρριψη αυτού του προϊόντος θα συμβάλει στην αποτελεσματική χρήση των φυσικών πόρων. Για περισσότερες πληροφορίες σχετικά με τα σημεία όπου μπορείτε να απορρίψετε τον εξοπλισμό σας για ανακύκλωση, επικοινωνήστε με το τοπικό γραφείο της πόλης σας, την υπηρεσία απορριμμάτων, το εγκεκριμένο σχήμα ΑΗΗΕ ή την υπηρεσία απόρριψης οικιακών αποβλήτων. Για περισσότερες πληροφορίες σχετικά με την επιστροφή και την ανακύκλωση των προϊόντων ΑΗΗΕ, επισκεφθείτε την τοποθεσία www.canon-europe.com/weee.

Gjelder kun den europeiske union og EØS (Norge, Island og Liechtenstein)

Dette symbolet indikerer at dette produktet ikke skal kastes sammen med husholdningsavfall, i henhold til WEEE-direktiv (2012/19/EU) og nasjonal lov. Produktet må leveres til et dertil egnet innsamlingspunkt, det vil si på en autorisert en-til-en-basis når du kjøper et nytt lignende produkt, eller til et autorisert innsamlingssted for resirkulering av avfall fra elektrisk og elektronisk utstyr (EE-utstyr). Feil håndtering av denne typen avfall kan være miljø- og helseskadelig på grunn av potensielt skadelige stoffer som ofte brukes i EE-utstyr. Samtidig bidrar din innsats for korrekt avhending av produktet til effektiv bruk av naturressurser. Du kan få mer informasjon om hvor du kan avhende utrangert utstyr til resirkulering ved å kontakte lokale myndigheter, et godkjent WEEE-program eller husholdningens renovasjonsselskap. Du finner mer informasjon om retur og resirkulering av WEEE-produkter på www.canon-europe.com/weee.

Vain Euroopan unionin sekä ETA:n (Norja, Islanti ja Liechtenstein) alueelle.

Tämä tunnus osoittaa, että sähkö- ja elektroniikkalaiteromua koskeva direktiivi (SER-direktiivi, 2012/19/EU) sekä kansallinen lainsäädäntö kieltävät tuotteen hävittämisen talousjätteen mukana. Tuote on vietävä asianmukaiseen keräyspisteeseen, esimerkiksi kodinkoneliikkeeseen uutta vastaavaa tuotetta ostettaessa tai viralliseen sähkö- ja elektroniikkalaiteromun keräyspisteeseen. Sähkö- ja elektroniikkalaiteromun virheellinen käsittely voi vahingoittaa ympäristöä ja ihmisten terveyttä, koska laitteet saattavat sisältää ympäristölle ja terveydelle haitallisia aineita. Lisäksi tuotteen asianmukainen hävittäminen säästää luonnonvaroja. Lisätietoja sähkö- ja elektroniikkalaiteromun keräyspisteistä saat kaupunkien ja kuntien tiedotuksesta, jätehuoltoviranomaisilta, sähkö- ja elektroniikkalaiteromun kierrätysjärjestelmän ylläpitäjältä ja jätehuoltoyhtiöltä. Lisätietoja sähkö- ja elektroniikkalaiteromun keräyksestä ja kierrätyksestä on osoitteessa www.canon-europe.com/weee.

Endast för Europeiska unionen och EES (Norge, Island och Liechtenstein)

Den här symbolen visar att produkten enligt WEEE-direktivet (2012/19/EU) och nationell lagstiftning inte får sorteras och slängas som hushållsavfall. Den här produkten ska lämnas in på en därför avsedd insamlingsplats, t.ex. på en återvinningsstation auktoriserad att hantera elektrisk och elektronisk utrustning (EE-utrustning) eller hos handlare som är auktoriserade att byta in varor då nya, motsvarande köps (en mot en). Olämplig hantering av avfall av den här typen kan ha en negativ inverkan på miljön och

människors hälsa på grund av de potentiellt farliga ämnen som kan återfinnas i elektrisk och elektronisk utrustning. Din medverkan till en korrekt avfallshantering av den här produkten bidrar dessutom till en effektiv användning av naturresurserna. Kontakta ditt lokala kommunkontor, berörd myndighet, företag för avfallshantering eller ta del av en godkänd WEEE-organisation om du vill ha mer information om var du kan lämna den kasserade produkten för återvinning. För mer information om inlämning och återvinning av WEEE-produkter, se www.canon-europe.com/weee.

Pouze Evropská unie a EHP (Norsko, Island a Lichtenštejnsko)

Tento symbol znamená, že podle směrnice o OEEZ (2012/19/EU) a podle vnitrostátních právních předpisů nemá být tento výrobek likvidován s odpadem z domácností. Tento výrobek má být vrácen do sběrného místa, např. v rámci autorizovaného systému odběru jednoho výrobku za jeden nově prodaný podobný výrobek nebo v autorizovaném sběrném místě pro recyklaci odpadních elektrických a elektronických zařízení (OEEZ). Nevhodné nakládání s tímto druhem odpadu by mohlo mít negativní dopad na životní prostředí a lidské zdraví, protože elektrická a elektronická zařízení zpravidla obsahují potenciálně nebezpečné látky. Vaše spolupráce na správné likvidaci tohoto výrobku současně napomůže efektivnímu využívání přírodních zdrojů. Další informace o místech sběru vašeho odpadního zařízení k recyklaci vám sdělí místní úřad vaší obce, správní orgán vykonávající dozor nad likvidací odpadu, sběrny OEEZ nebo služba pro odvoz komunálního odpadu. Další informace týkající se vracení a recyklace OEEZ naleznete na adrese www.canon-europe.com/weee.

Csak az Európai Unió és az EGT (Norvégia, Izland és Liechtenstein) országaiban

Ez a szimbólum azt jelzi, hogy a helyi törvények és a WEEE-irányelv (2012/19/EU) szerint a termék nem kezelhető háztartási hulladékként. A terméket a kijelölt nyilvános gyűjtőpontokon kell leadni, például hasonló cserekészülék vásárlásakor, illetve bármelyik, elektromos és elektronikai berendezésekből származó hulladék (WEEE) átvételére feljogosított gyűjtőponton. Az ilyen jellegű hulladékok a nem megfelelő kezelés esetén a bennük található veszélyes anyagok révén ártalmasak lehetnek a környezetre és az emberek egészségére. Továbbá, a termékből származó hulladék megfelelő kezelésével hozzájárulhat a természetes nyersanyagok hatékonyabb hasznosításához. A berendezésekből származó, újrahasznosítható hulladékok elhelyezésére vonatkozó további tudnivalókért forduljon a helyi önkormányzathoz, a közterület-fenntartó vállalathoz, a háztartási hulladék begyűjtését végző vállalathoz, illetve a hivatalos WEEE-képviselethez. További tudnivalókat a WEEE-termékek visszajuttatásáról és újrahasznosításáról a www.canon-europe.com/weee.

Tylko dla krajów Unii Europejskiej oraz EOG (Norwegia, Islandia i Liechtenstein)

Ten symbol oznacza, że zgodnie z dyrektywą WEEE dotyczącą zużytego sprzętu elektrycznego i elektronicznego (2012/19/UE) oraz przepisami lokalnymi nie należy wyrzucać tego produktu razem z odpadami gospodarstwa domowego. Produkt należy przekazać do wyznaczonego punktu gromadzenia odpadów, np. firmie, od której kupowany jest nowy, podobny produkt lub do autoryzowanego punktu gromadzenia zużytego sprzętu elektrycznego i elektronicznego w celu poddania go recyklingowi. Usuwanie tego typu odpadów w nieodpowiedni sposób może mieć negatywny wpływ na otoczenie i zdrowie innych osób ze względu na niebezpieczne substancje stosowane w takim sprzęcie. Jednocześnie pozbycie się zużytego sprzętu w zalecany sposób przyczynia się do właściwego wykorzystania zasobów naturalnych. Aby uzyskać więcej informacji na temat punktów, do których można dostarczyć sprzęt do recyklingu, prosimy skontaktować się z lokalnym urzędem miasta, zakładem utylizacji odpadów, skorzystać z instrukcji zatwierdzonej dyrektywą WEEE lub skontaktować się z przedsiębiorstwem zajmującym się wywozem odpadów domowych. Więcej informacji o zwracaniu i recyklingu zużytego sprzętu elektrycznego i elektronicznego znajduje się w witrynie www.canon-europe.com/weee.

Platí len pre štáty Európskej únie a EHP (Nórsko, Island a Lichtenštajnsko)

Tento symbol znamená, že podľa Smernice 2012/19/EÚ o odpade z elektrických a elektronických zariadení (OEEZ) a podľa platnej legislatívy Slovenskej republiky sa tento produkt nesmie likvidovať spolu s komunálnym odpadom. Produkt je potrebné odovzdať do určenej zberne, napr. prostredníctvom výmeny za kúpu nového podobného produktu, alebo na autorizované zberné miesto, ktoré spracúva odpad z elektrických a elektronických zariadení (EEZ). Nesprávna manipulácia s takýmto typom odpadu môže mať negatívny vplyv na životné prostredie a ľudské zdravie, pretože elektrické a elektronické zariadenia obsahujú potenciálne nebezpečné látky. Spoluprácou na správnej likvidácii produktu prispejete k účinnému využívaniu prírodných zdrojov. Ďalšie informácie o mieste recyklácie opotrebovaných zariadení získate od miestneho úradu, úradu životného prostredia, zo schváleného plánu OEEZ alebo od spoločnosti, ktorá zaisťuje likvidáciu komunálneho odpadu. Viac informácií nájdete aj na webovej stránke: www.canon-europe.com/weee.

Üksnes Euroopa Liit ja EMP (Norra, Island ja Liechtenstein)

See sümbol näitab, et antud toodet ei tohi vastavalt elektri- ja elektroonikaseadmete jäätmeid käsitlevale direktiivile (2012/19/EL) ning teie riigis kehtivatele õigusaktidele utiliseerida koos olmejäätmetega. Antud

toode tuleb anda selleks määratud kogumispunkti, nt müügipunkt, mis on volitatud üks ühe vastu vahetama, kui ostate uue sarnase toote, või elektri- ja elektroonikaseadmete jäätmete ümbertöötlemiseks mõeldud kogumispunkti. Täiendava teabe saamiseks elektri- ja elektroonikaseadmetest tekkinud jäätmete tagastamise ja ümbertöötlemise kohta võtke ühendust kohaliku omavalitsusega, asjakohase valitsusasutusega, asjakohase tootjavastutusorganisatsiooniga või olmejäätmete käitlejaga. Lisateavet leitate ka Interneti-leheküljelt www.canon-europe.com/weee.

Tikai Eiropas Savienībai un EEZ (Norvēģijai, Islandei un Lihtenšteinai)

Šis simbols norāda, ka atbilstoši ES Direktīvai (2012/19/ES) par elektrisko un elektronisko iekārtu atkritumiem (EEIA) un vietējiem tiesību aktiem no šī izstrādājuma nedrīkst atbrīvoties, izmetot to kopā ar sadzīves atkritumiem. Šis izstrādājums ir jānodod piemērotā savākšanas vietā, piemēram, apstiprinātā veikalā, kur iegādājaties līdzīgu jaunu produktu un atstājat veco, vai apstiprinātā vietā izlietotu elektrisko un elektronisko iekārtu pārstrādei. Nepareiza šāda veida atkritumu apsaimniekošana var apdraudēt vidi un cilvēka veselību tādu iespējami bīstamu vielu dēļ, kas parasti ir elektriskajās un elektroniskajās iekārtās. Turklāt jūsu atbalsts pareizā šāda veida atkritumu apsaimniekošanā sekmēs efektīvu dabas resursu izmantošanu. Lai saņemtu pilnīgāku informāciju par vietām, kur izlietoto iekārtu var nodot pārstrādei, sazinieties ar vietējo pašvaldību, atkritumu savākšanas atbildīgo dienestu, pilnvarotu EEIA struktūru vai sadzīves atkritumu apsaimniekošanas iestādi. Lai saņemtu plašāku informāciju par elektrisko un elektronisko iekārtu nodošanu pārstrādei, apmeklējiet tīmekļa vietni www.canon-europe.com/weee.

Tik Europos Sąjungai ir EEE (Norvegijai, Islandijai ir Lichtenšteinui)

Šis ženklas reiškia, kad gaminio negalima išmesti su buitinėmis atliekomis, kaip yra nustatyta Direktyvoje (2012/19/ES) ir nacionaliniuose teisė aktuose dėl EĮ atliekų tvarkymo. Šį gaminį reikia atiduoti į tam skirtą surinkimo punktą, pvz., pagal patvirtintą keitimo sistemą, kai perkamas panašus gaminys, arba į elektros ir elektroninės įrangos (EĮ) atliekų perdirbimo punktą. Netinkamas tokios rūšies atliekų tvarkymas dėl elektros ir elektroninėje įrangoje esančių pavojingų medžiagų gali pakenkti aplinkai ir žmonių sveikatai. Padėdami užtikrinti tinkamą šio gaminio šalinimo tvarką, kartu prisidėsite prie veiksmingo gamtos išteklių naudojimo. Jei reikia daugiau informacijos, kaip šalinti tokias atliekas, kad jos būtų toliau perdirbamos, kreipkitės į savo miesto valdžios institucijas, atliekų tvarkymo organizacijas, patvirtintų EĮ atliekų sistemų arba jūsų buitinių atliekų tvarkymo įstaigų atstovus. Išsamesnės informacijos apie EĮ atliekų grąžinimo ir perdirbimo tvarką galite rasti apsilankę tinklalapyje www.canon-europe.com/weee.

Samo za Evropsko unijo in EGP (Norveška, Islandija in Lihtenštajn)

Ta simbol pomeni, da tega izdelka v skladu z direktivo OEEO (2012/19/EU) in državno zakonodajo ne smete odvreči v gospodinjske odpadke. Ta izdelek morate odložiti na ustrezno zbiralno mesto, na primer pri pooblaščenem prodajalcu, ko kupite podoben nov izdelek ali na zbiralno mesto za recikliranje električne in elektronske opreme. Neprimerno ravnanje s takšnimi odpadki lahko negativno vpliva na okolje in človekovo zdravje zaradi nevarnih snovi, ki so povezane z električno in elektronsko opremo. S pravilno odstranitvijo izdelka hkrati prispevate tudi k učinkoviti porabi naravnih virov. Če želite več informacij o tem, kje lahko odložite odpadno opremo za recikliranje, pokličite občinski urad, komunalno podjetje ali službo, ki skrbi za odstranjevanje odpadkov, ali si oglejte načrt OEEO. Če želite več informacij o vračanju in recikliranju izdelkov v skladu z direktivo OEEO, obiščite www.canon-europe.com/weee.

Само за Европейския съюз и ЕИП (Норвегия, Исландия и Лихтенщайн)

Този символ показва, че този продукт не трябва да се изхвърля заедно с битовите отпадъци, съгласно Директивата за ИУЕЕО (2012/19/ЕС) и Вашето национално законодателство. Този продукт трябва да бъде предаден в предназначен за целта пункт за събиране, например на база размяна, когато купувате нов подобен продукт, или в одобрен събирателен пункт за рециклиране на излязло от употреба електрическо и електронно оборудване (ИУЕЕО). Неправилното третиране на този тип отпадъци може да доведе до евентуални отрицателни последствия за околната среда и човешкото здраве поради потенциално опасните вещества, които обикновено са свързани с ЕЕО. В същото време Вашето съдействие за правилното изхвърляне на този продукт ще допринесе за ефективното използване на природните ресурси. Повече информация относно местата, където може да предавате излязло от употреба оборудване за рециклиране, може да получите от местните власти, от органа, отговорен за отпадъците и от одобрена система за излязло от употреба ЕЕО или от Вашата местна служба за битови отпадъци. За повече информация относно връщането и рециклирането на продукти от излязло от употреба ЕЕО посетете www.canon-europe.com/weee.

Doar pentru Uniunea Europeană şi EEA (Norvegia, Islanda şi Liechtenstein)

Acest simbol indică faptul că acest produs nu trebuie aruncat o dată cu reziduurile menajere, în conformitate cu Directiva DEEE (Directiva privind deşeurile de echipamente electrice şi electronice) (2012/19/UE) şi legile naţionale. Acest produs trebuie transportat la un punct de colectare special, de

exemplu un centru care preia produsele vechi atunci când achiziţionaţi un produs nou similar, sau la un punct de colectare autorizat pentru reciclarea deşeurilor provenite de la echipamentele electrice şi electronice (EEE). Mânuirea necorespunzătoare a acestor tipuri de deşeuri poate avea un impact negativ asupra mediului înconjurător şi sănătăţii indivizilor, din cauza substanţelor potenţial nocive care sunt în general asociate cu EEE. În acelaşi timp, cooperarea dvs. la reciclarea corectă a acestui produs va contribui la utilizarea efectivă a resurselor naturale. Pentru mai multe informaţii privind locurile de reciclare a deşeurilor provenite de la echipamente, contactaţi biroul primăriei locale, autoritatea responsabilă cu colectarea deşeurilor, schema DEEE aprobată sau serviciul de colectare a deşeurilor menajere. Pentru mai multe informaţii privind returnarea şi reciclarea produselor DEEE, vizitaţi www.canon-europe.com/weee.

Samo za Europsku uniju i EEZ (Norveška, Island i Lihtenštajn)

Ovaj simbol pokazuje da se ovaj proizvod ne smije odlagati s kućnim otpadom sukladno WEEE Direktivi (2012/19/EC) i vašem nacionalnom zakonu. Ovaj proizvod je potrebno predati na posebno mjesto za sakupljanje otpada, npr. na ovlašteno mjesto gdje možete zamijeniti staro za novo ukoliko kupujete novi sličan proizvod ili na ovlašteno mjesto za sakupljanje rabljene električne i elektroničke opreme (EEE) za recikliranje. Nepropisno rukovanje ovom vrstom otpada može imati negativan učinak na okolinu i zdravlje ljudi zbog supstanci koje su potencijalno opasne za zdravlje, a općenito se povezuju s EEE. Istovremeno, vaša će suradnja kroz propisno odlaganje ovog proizvoda doprinijeti efektivnoj uporabi prirodnih resursa. Za više informacija o tome gdje možete odložiti svoj otpad za recikliranje obratite se vašem lokalnom gradskom uredu, komunalnoj službi, odobrenom WEEE programu ili službi za odlaganje kućnog otpada. Ostale informacije o vraćanju i recikliranju WEEE proizvoda potražite na www.canon-europe.com/weee.

Korisnici u Srbiji

Ovaj simbol označava da ovaj proizvod ne sme da se odlaže sa ostalim kućnim otpadom, u skladu sa WEEE Direktivom (2012/19/EU) i nacionalnim zakonima. Ovaj proizvod treba predati određenom centru za prikupljanje, npr. na osnovi "jedan-za-jedan" kada kupujete sličan novi proizvod, ili ovlašćenom centru za prikupljanje za reciklažu istrošene električne i elektronske opreme (EEE). Nepravilno rukovanje ovom vrstom otpada može da ima moguće negativne posledice po životnu sredinu i ljudsko zdravlje usled potencijalno opasnih materijala koji se uglavnom vezuju za EEE. U isto vreme, vaša saradnja na ispravnom odlaganju ovog proizvoda će doprineti efikasnom korišćenju prirodnih resursa. Za više informacija o tome gde možete da predate vašu staru opremu radi recikliranje, vas molimo, da kontaktirate lokalne gradske vlasti, komunalne službe, odobreni plan reciklaže ili Gradsku čistoću. Za više informacija o vraćanju i recikliranju WEEE proizvoda, posetite stranicu www.canon-europe.com/weee.

Handling Precautions

- Canceling Print Jobs
- Legal Restrictions on Printing
- Printer Handling Precautions
- Transporting Your Printer
- When Repairing, Lending, or Disposing of the Printer
- Keeping Print Quality High

Legal Restrictions on Printing

Printing or modifying printed copies of the following may be punishable under law.

This list is non-exhaustive. When in doubt, check with a local legal representative.

- Paper money
- Money orders
- Certificates of deposit
- Postage stamps (canceled or uncanceled)
- Identification badges or insignia
- Selective service or draft papers
- Checks or drafts issued by governmental agencies
- Motor vehicle licenses and certificates of title
- Traveler's checks
- Food stamps
- Passports
- Immigration papers
- Internal revenue stamps (canceled or uncanceled)
- Bonds or other certificates of indebtedness
- Stock certificates
- Copyrighted works or works of art, without the owner's consent

Printer Handling Precautions

Do not place any object on the top cover!

Do not place any object on the top cover. It will fall into the rear tray when the top cover is opened and cause the printer to malfunction. Also, place the printer where objects will not fall on it.

Transporting Your Printer

When relocating the printer for changing your living place, make sure of the following.

Important

- You cannot take ink out of ink tanks.
- Check if the tank cap is completely inserted.
- Prepare for transporting the printer with the print head attached. This allows the printer to automatically cap the print head, thus preventing it from drying.
- Do not remove the print head. Ink may leak.
- If ink stains the inside of the printer, wipe them using a soft cloth dampened with water.
- When transporting the printer, pack the printer in a plastic bag so that ink does not leak.
- Pack the printer in a sturdy box so that it is placed with its bottom facing down, using sufficient protective material to ensure safe transport.
- Do not tilt the printer. Ink may leak.
- When a shipping agent is handling transport of the printer, have its box marked "THIS SIDE UP" to keep the printer with its bottom facing down. Mark also with "FRAGILE" or "HANDLE WITH CARE".

- Please handle with care and ensure the box remains flat and NOT turned upside down or on its side, as the printer may be damaged and ink in the printer may leak.

1. Turn the printer off.

2. Check that **ON** lamp is off and unplug power cord.

   ### Important

   - Do not unplug the printer while the **ON** lamp is lit or flashing, as it may cause malfunction or damage to the printer, making the printer unable to print.

3. Retract paper output tray.

4. Close paper support.

5. Unplug the printer cable from the computer and from the printer, then unplug the power cord from the printer.

6. Use adhesive tape to secure all the covers on the printer to keep them from opening during transportation. Then pack the printer in the plastic bag.

   Close and seal the opening of the bag with an object such as tape so as not to leak ink.

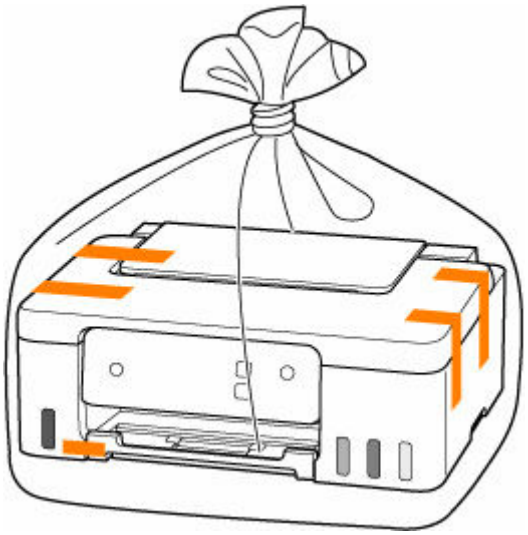

7. Attach the protective material to the printer when packing the printer in the box.

When Repairing, Lending, or Disposing of the Printer

If you have entered personal data, passwords and/or other security settings on the printer, such information may be stored in the printer.

To keep your personal information safe, please be sure to reset all printer settings when sending the printer for repair, lending or transferring the printer to another person, or disposing of the printer.

➡ Initializing Printer Settings

Keeping Print Quality High

The key to printing with the optimal printing quality is to prevent the print head from drying or clogging. Always observe the following rules for optimal printing quality.

Note

- Depending on the type of paper, ink may blur if you trace the printed area with a highlight pen or paint-stick, or bleed if water or sweat comes in contact with the printed area.

Never unplug the power cord until the power is turned off!

If you press the **ON** button to turn off the power, the printer caps the print head (nozzles) automatically to prevent from drying. If you unplug the power cord from the wall outlet before the **ON** lamp is turned off, the print head will not be capped properly and this will cause drying or clogging.

When unplugging the power cord, check that the **ON** lamp is not lit.

Print periodically!

Just as the tip of a felt pen becomes dry and unusable if it has not been used for a long time, even if it is capped, the print head too, may become dried or clogged if the printer has not been used for a long time. We recommend you to use the printer at least once a month.

Main Components and Their Use

- Main Components
- Power Supply

Main Components

- Front View
- Rear View
- Inside View
- Operation Panel

Front View

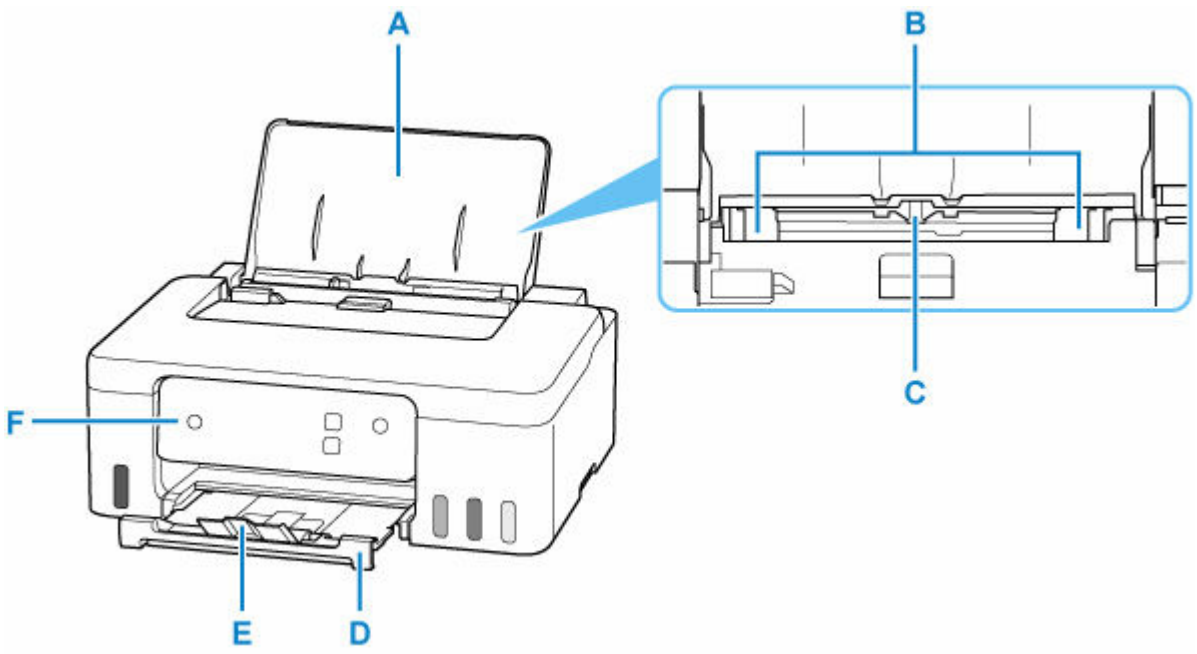

A: Paper Support

Open to load paper in the rear tray.

B: Paper Guides

Align with both sides of the paper stack.

C: Rear Tray

Two or more sheets of the same size and type of paper can be loaded at the same time, and fed automatically one sheet at a time.

➡ Loading Photo Paper / Plain Paper
➡ Loading Envelopes

D: Paper Output Tray

Printed paper is ejected. Pull out it before printing.

E: Output Tray Extension

Open to support ejected paper.

F: Operation Panel

Use to change the settings of the printer or to operate it.

➡ Operation Panel

Rear View

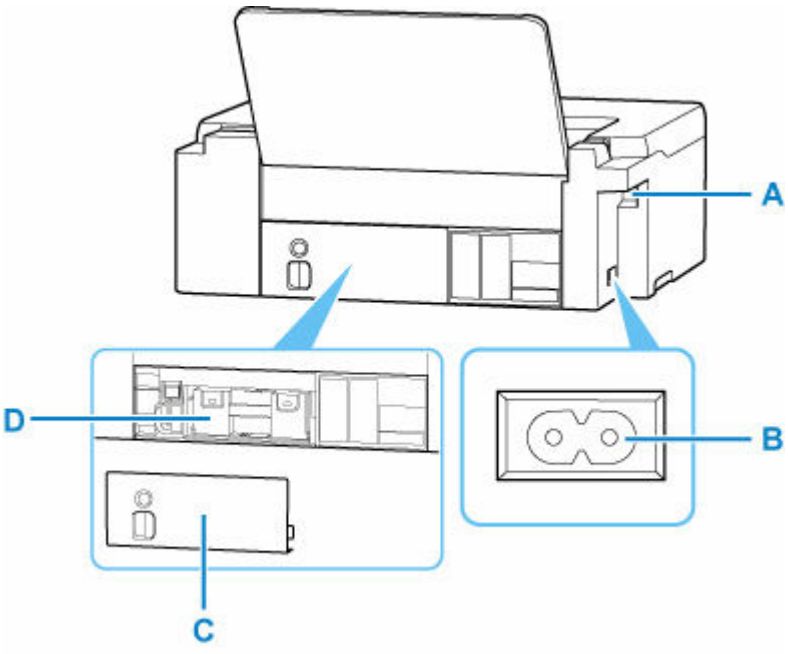

A: USB Port

Plug in the USB cable to connect the printer with a computer.

B: Power Cord Connector

Plug in the supplied power cord.

C: Maintenance Cover

Remove when replacing the maintenance cartridge.

D: Maintenance Cartridge

Absorbs ink used for cleaning.

➡ Replacing the Maintenance Cartridge

Important

- Do not touch the metal casing.
- Do not plug in or unplug the USB cable while the printer is printing with the computer. This can cause trouble.

Inside View

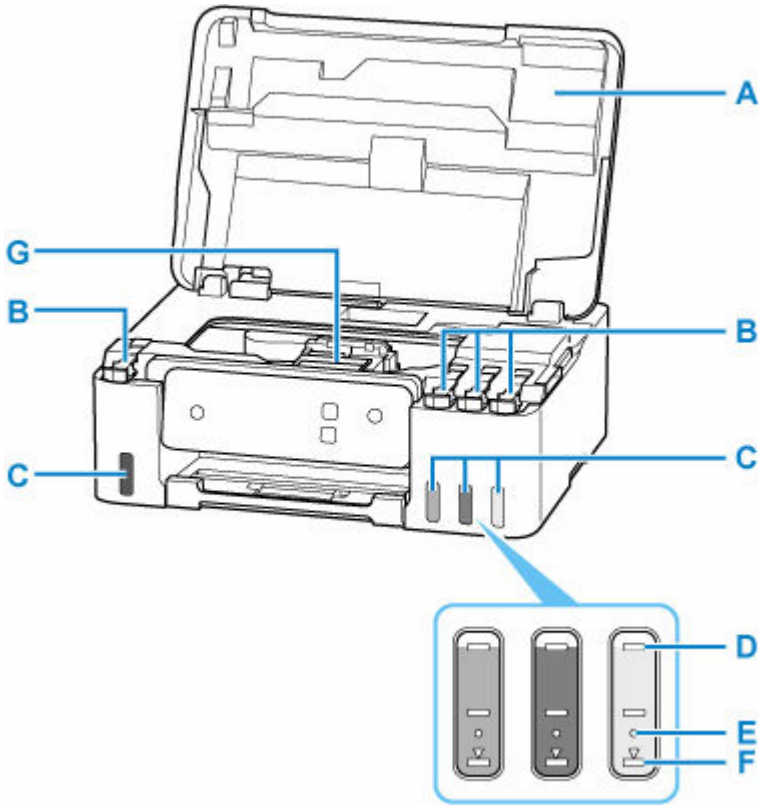

A: Top Cover

Open to refill ink tanks and to remove jammed paper.

B: Tank Caps

Open to refill ink tanks.

C: Ink Tanks

The black ink tank is on the left, and the color ink tanks (cyan, magenta, and yellow) are on the right.

If any ink levels are low, refill the low tanks.

➡ Refilling Ink Tanks

D: Upper Limit Line

Indicates the maximum capacity of the ink.

E: Single Dot

Indicates the amount of ink required when replacing ink in print head.

F: Lower Limit Line

Indicates the lower limit of the sufficient amount of ink to print. Refill the ink tank before the amount of ink is below this line.

G: Print Head Holder

The print head is pre-installed.

Operation Panel

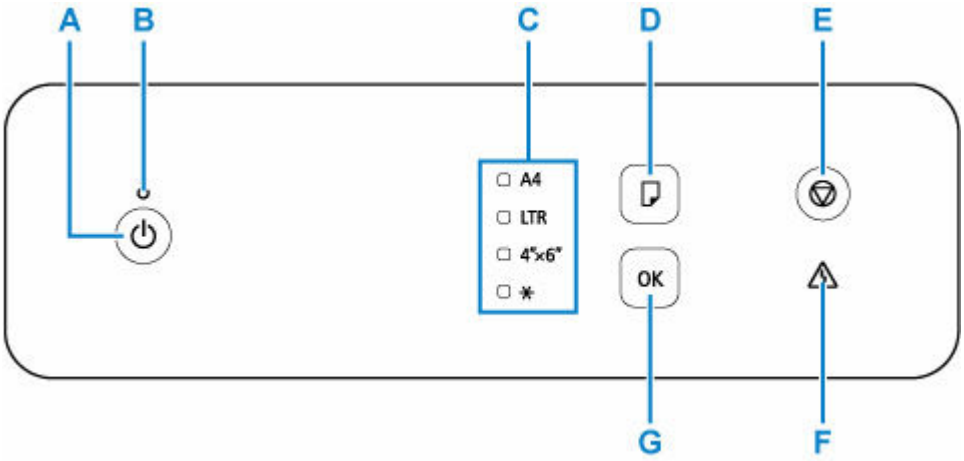

A: ON button

Turns the power on or off.

➡ Turning the Printer On and Off

B: ON lamp

Lights after flashing when the power is turned on.

C: Paper lamp

Lights depending on the current paper size.

D: Paper Select button

Select the paper size of the printer.

E: Stop button

Cancels operation when you press this button while printing is in progress. You can perform maintenance or printer's settings when you press and hold the **Stop** button.

F: Alarm lamp

Lights or flashes when an error occurs.

G: OK button

Finalizes the paper size. Also used to resolve errors.

Power Supply

- Checking that Power Is On
- Turning the Printer On and Off
- Unplugging the Printer

Checking that Power Is On

The **ON** lamp is lit when the printer is turned on.

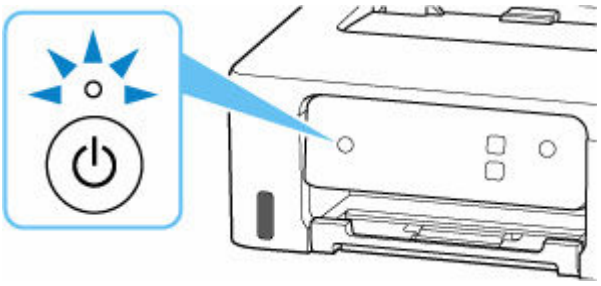

Note

- It may take a while for the printer to start printing immediately after you turn on the printer.

Turning the Printer On and Off

Turning on the printer

Press the ON button to turn on the printer.

The **ON** lamp flashes and then remains lit.

➡ Checking that Power Is On

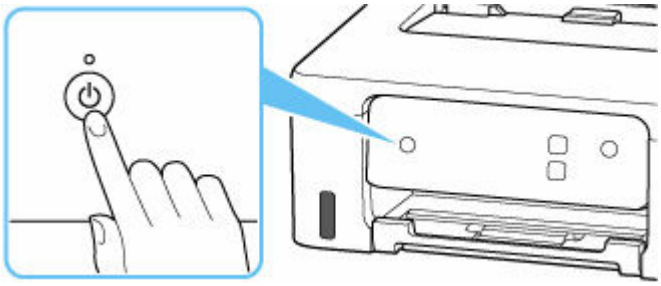

Note

- It may take a while for the printer to start printing immediately after you turn on the printer.
- If the **Alarm** lamp lights or flashes, see When Error Occurred.
- You can set the printer to automatically turn on when a print operation is performed from a computer. This feature is set to off by default.
  - For Windows:
    - ➡ Managing the Printer Power
  - For macOS:
    - ➡ Managing the Printer Power

Turning off the printer

Press the ON button to turn off the printer.

When the **ON** lamp stops flashing, the printer is turned off.

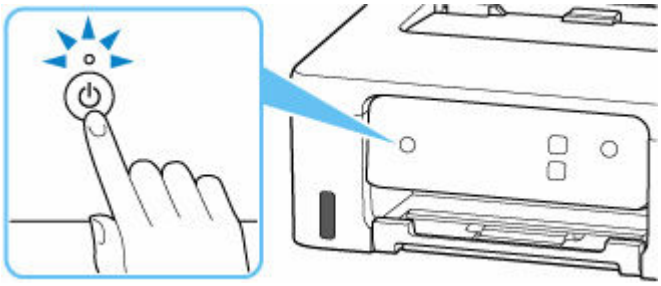

Important

- When you unplug the power cord after turning off the printer, be sure to confirm that the **ON** lamp is off.

Note

- You can set the printer to automatically turn off when no operations are performed or no print jobs are sent to the printer for a certain interval. This feature is set to on by default.

Unplugging the Printer

To unplug the power cord, follow the procedure below.

Important

- When you unplug the power cord, press the **ON** button, then confirm that the **ON** lamp is off. Unplugging the power cord while the **ON** lamp is lit or flashing may cause drying or clogging of the print head and print quality may be reduced.

1. Press the **ON** button to turn the printer off.

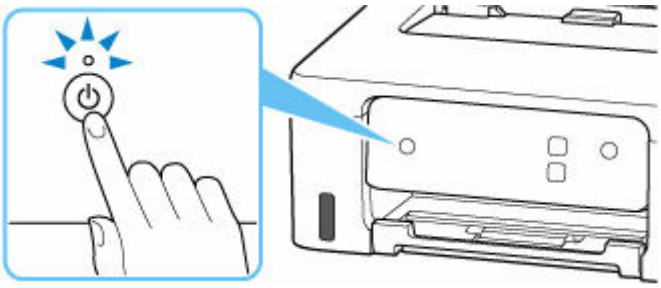

2. Confirm that the **ON** lamp is off.

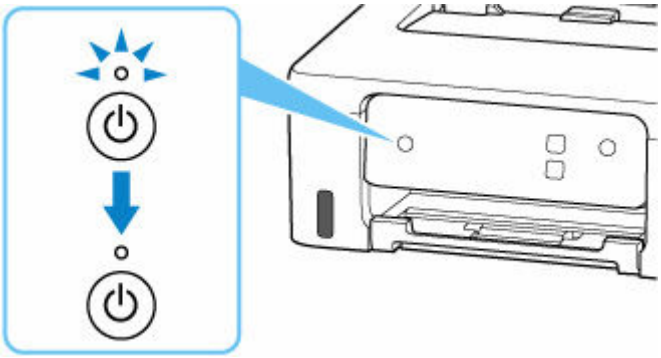

3. Unplug the power cord.

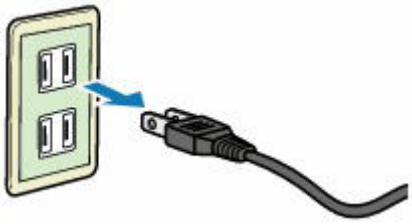

The specification of the power cord differs depending on the country or region of use.

Changing Settings

- Changing Printer Settings from Your Computer (Windows)
- Changing Printer Settings from Your Computer (macOS)
- Changing Settings from Operation Panel
- Handling Printer Configuration Using the Web Browser

Changing Printer Settings from Your Computer (Windows)

- Changing the Print Options
- Setting the Ink to be Used
- Managing the Printer Power
- Changing the Printer Operation Mode

Changing the Print Options

You can change the detailed printer driver settings for print data that is sent from an application software.

Specify this option if you encounter print failures such as part of an image data being cut off.

1. Open the printer driver setup window

2. Click **Print Options...** on the **Page Setup** tab

   The **Print Options** dialog box opens.

3. Change the individual settings

   If necessary, change the setting of each item, and then click **OK**.

   The **Page Setup** tab is displayed again.

Setting the Ink to be Used

This feature enables you to specify which ink to use when printing.

1. Open the printer driver setup window

2. Click **Print Options...** on the **Page Setup** tab

   The **Print Options** dialog box appears.

3. Select the ink to be used from **Print With**

   Select the ink to be used for printing and click **OK**.

4. Click **OK** on the **Page Setup** tab

   When you perform printing, the specified ink will be used.

Important

- When the following settings are specified, **Black Only** does not function because the printer uses an ink other than black to print documents.
  - Other than **Plain Paper**, **Envelope**, **Ink Jet Hagaki (A)**, **Hagaki K (A)**, **Hagaki (A)**, or **Hagaki** is selected for **Media Type** on the **Media/Quality** tab
  - A checkmark is added to **Borderless Printing** on the **Page Setup** tab
- Do not detach the print head that is not in use. Printing cannot be performed while either print head is detached.

Managing the Printer Power

This function allows you to manage the printer power from the Canon IJ Printer Assistant Tool.

Power Off

The **Power Off** function turns off the printer. When you use this function, you will not be able to turn the printer on from the Canon IJ Printer Assistant Tool.

1. Open Canon IJ Printer Assistant Tool

2. Perform power off

   Click **Power Off**. When the confirmation message appears, click **OK**.

   The printer power switches off.

Auto Power

Auto Power allows you to set **Auto Power On** and **Auto Power Off**.
The **Auto Power On** function automatically turns on the printer when data is received.
The **Auto Power Off** function automatically turns off the printer when there are no operations from the printer driver or the printer for a specified period of time.

1. Open the Canon IJ Printer Assistant Tool

2. Check that the printer is on and then click **Auto Power**

   The **Auto Power Settings** dialog box will open.

   Note

   - If the printer is off or if communication between the printer and the computer is disabled, an error message may appear because the computer cannot collect the printer status.
     If this happens, click **OK** to display the most recent settings specified on your computer.

3. If necessary, complete the following settings:

   Auto Power On

   Select the auto-power on setting.
   Select **Disable** to prevent the auto-power on feature from functioning.
   Check that the printer is on, and then click **OK** to change the printer settings.
   Select **Enable** to turn the printer on automatically when print data is sent to it.

   Auto Power Off

   Specify the time from the list. When this time lapses without any operations from the printer driver or the printer, the printer is turned off automatically.

Note

- Enabling auto power on, disabling auto power off, or extending the time for auto power off will increase power consumption.

4. Apply the settings

Click **OK**. When the confirmation message appears, click **OK**.

The setting is enabled after this. When you want to disable this function, select **Disable** from the list according to the same procedure.

Note

- When the printer is turned off, the Canon IJ Status Monitor message varies depending on the **Auto Power On** setting.
  When the setting is **Enable**, "Printer is standing by" is displayed. When the setting is **Disable**, "Printer is offline" is displayed.

Changing the Printer Operation Mode

If necessary, switch between various modes of printer operation.
If you want to change printer settings, open one of the following two Custom Settings Tab, and configure settings.

- **Custom Settings** in the **Maintenance** Tab
- **Custom Settings** in Canon IJ Printer Assistant Tool

For functions related to print settings, go to **Custom Settings** in the **Maintenance** Tab. For other settings, go to **Custom Settings** in Canon IJ Printer Assistant Tool.

Custom Settings in the Maintenance Tab

1. Open the **Maintenance** Tab

2. Check that the printer power is on, and click **Custom Settings**

   The **Custom Settings** dialog box opens.

   Note

   - If the printer is off or if communication between the printer and the computer is disabled, an error message may appear because the computer cannot collect the printer status.
     If this happens, click **OK** to display the most recent settings specified on your computer.

3. Configure settings

   If necessary, switch between various modes of printer operation.

4. Apply the settings

   Click **OK** and when the confirmation message appears, click **OK**.

   The printer operates with the modified settings hereafter.

Custom Settings in Canon IJ Printer Assistant Tool

1. Open the Canon IJ Printer Assistant Tool

2. Check that the printer is on and then click **Custom Settings**

   The **Custom Settings** dialog box opens.

   Note

   - If the printer is off or if communication between the printer and the computer is disabled, an error message may appear because the computer cannot collect the printer status.
     If this happens, click **OK** to display the most recent settings specified on your computer.

3. Configure settings

If necessary, switch between various modes of printer operation.

4. Apply the settings

Click **OK** and when the confirmation message appears, click **OK**.

The printer operates with the modified settings hereafter.

Changing Printer Settings from Your Computer (macOS)

- Managing the Printer Power
- Changing the Printer Operation Mode

Managing the Printer Power

Printer power supply is operated from Remote UI.

Energy saving settings

Energy saving settings allow you to set Auto power off and Auto power on.

Auto power off is the function wherein the printer automatically turns itself off, when data is not sent or the printer remains inactive for a certain period.
The Auto power on function automatically turns on the printer when data is received.

1. Selecting **Printer settings** from Remote UI

2. Click **Energy saving settings**

3. Complete the following settings:

   Auto power off
   Specify the time from the list. Printer automatically turns itself off, when data is not sent within the specified time or the printer has remained inactive.

   Auto power on
   When you check this check box, the printer automatically turns itself on when data is sent.

   Note

   - Enabling auto power on, disabling auto power off, or extending the time for auto power off will increase power consumption.

4. Apply the settings

   Click **OK**.
   The printer will operate with the changed settings hereafter.

Changing the Printer Operation Mode

If necessary, switch between various modes of printer operation.

1. Check whether the printer is on and select **Printer settings** from Remote UI

2. If necessary, complete the following settings:

   Print settings - Prevent paper abrasion

   The printer can increase the gap between the print head and the paper during high-density printing to prevent paper abrasion.
   Check this check box to prevent paper abrasion.

   Custom settings - Detect paper setting mismatch

   If the check box is deselected, at the time of printing from PC, you can continue to print without the message display even if the paper settings set in the Print dialog differs from the paper information configured on the printer.

   Ink drying wait time

   You can set the length of the printer rest time until printing of the next page begins. The wait time becomes longer as the value set in the list increases, and shorter as the value decreases.
   If the paper gets stained because the next page is ejected before the ink on the printed page dries, increase the ink drying wait time.

3. Apply the settings

   Click **OK**.

   The printer operates with the modified settings hereafter.

Changing Settings from Operation Panel

- Setting Items on Operation Panel
- Ink level monitor
- Checking the Total Number of Uses of Printer
- Initializing Printer Settings

Setting Items on Operation Panel

Number of Flashes of Alarm Lamp	Details
1	Cleaning
2	Nozzle Check
3	Roller cleaning
4	Bottom plate cleaning
5	Improving paper rubbing
6	Ink level notification: Enabled
7	Ink level notification: Disabled
8	Paper mismatch detection: Enabled
9	Paper mismatch detection: Disabled
10	Printing of usage statistics
11	Resetting all settings

Ink level monitor

Enabling the remaining ink level notification function / Resetting the remaining ink count

Important

- If the remaining ink count is reset when the ink tank is not full, the remaining ink level cannot be detected properly.

  After refilling the ink to the upper limit line of the ink tank, set a remaining ink level notification function to enable.

1. Check that printer is turned on.

2. Press and hold the **Stop** button and release it when the **Alarm** lamp flashes 6 times.

   The remaining ink level notification function is enabled, then remaining ink count is reset.

Disabling the remaining ink level notification function

Important

- If the remaining ink level notification function is disabled, visually inspect the remaining ink and refill the ink tanks as necessary. Continuing printing with ink below the lower limit line of an ink tank may prevent satisfactory print quality.

1. Check that printer is turned on.

2. Press and hold the **Stop** button and release it when the **Alarm** lamp flashes 7 times.

   The remaining ink level notification function is disabled.

Checking the Total Number of Uses of Printer

The total number of uses of printer can be printed and checked.

1. Check that printer is turned on.
2. Load A4 or Letter-sized plain paper.
3. Press and hold the **Stop** button and release it when the **Alarm** lamp flashes 10 times.

   The total number of uses of printer is printed.

Initializing Printer Settings

You can initialize the printer settings.

1. Check that printer is turned on.

2. Press and hold the **Stop** button and release it when the **Alarm** lamp flashes 11 times.

   All the printer settings are initialized.

Note

- You cannot set the following setting items back to the default:
  - The current position of the print head

Specifications

General Specifications

Interface	**USB port:** Hi-Speed USB * * A computer that complies with Hi-Speed USB standard is required. Since the Hi-Speed USB interface is fully upwardly compatible with USB 1.1, it can be used at USB 1.1.
Operating environment	**Temperature:** 41 to 95 °F (5 to 35 °C) **Humidity:** 10 to 90 % RH (no condensation) * The performance of the printer may be reduced under certain temperature and humidity conditions. Recommended conditions: **Temperature:** 59 to 86 °F (15 to 30 °C) **Humidity:** 10 to 80 % RH (no condensation) * For the temperature and humidity conditions of papers such as photo paper, refer to the paper's packaging or the supplied instructions.
Storage environment	**Temperature:** 32 to 104 °F (0 to 40 °C) **Humidity:** 5 to 95 % RH (no condensation)
Power supply	AC 100-240 V, 50/60 Hz (The supplied power cord is only for the country or region you purchased.)
Power consumption	**Printing:** 14 W or less *1 **Standby (minimum):** 0.6 W or less *1*2 **Standby (all ports connected):** 0.6 W or less **OFF:** 0.1 W or less *1 USB connection to a PC *2 The wait time for standby cannot be changed.
External dimensions (W x D x H)	Approx. 16.4 x 13 x 5.8 in. (Approx. 416 x 330 x 146 mm) * With the trays retracted.
Weight	Approx. 10.1 lb (Approx. 4.6 kg) * With the Print Head installed.

Minimum System Requirements

Conform to the operating system's requirements when higher than those given here.

Windows

Operating System	Windows 11, Windows 10, Windows 8.1, Windows 7 SP1 Note: Operation can only be guaranteed on a PC with pre-installed operating system. Printer driver and IJ Printer Assistant Tool support the following OS: Windows Server 2008 R2 SP1, Windows Server 2012 R2, Windows Server 2016, Windows Server 2019 and Windows Server 2022
Amount of hard disk space required for installing the driver	1.5 GB or more The necessary amount of hard disk space may be changed without notice.

macOS

Operating System	macOS Mojave 10.14.6 - macOS Monterey 12

Other Supported OS

Chrome OS Some functions may not be available with the supported OS. Refer to the Canon web site for details.

Information in this manual is subject to change without notice.

Information about Paper

- **Supported Media Types**
  - Paper Load Limit
- **Unsupported Media Types**
- **Handling Paper**
- **Print Area**

Supported Media Types

For best results, choose paper designed for how you are printing. A variety of paper for documents as well as photos or illustrations is available from Canon. Use genuine Canon paper to print important photos, when possible.

- Media Types
- Page Sizes
- Paper Weight

Media Types

Genuine Canon paper

Note

- For warnings on use of the non-printable side, see each product's usage information.
- Page sizes and media types differ depending on the country or region where the paper is sold. For details on page sizes and media types, access the Canon website.
- Genuine Canon paper is not available in some countries or regions. Note that in the United States, Canon paper is not sold by model number. Instead, purchase paper by name.

Paper for printing documents:

- Canon Red Label Superior <WOP111>
- Canon Océ Office Colour Paper <SAT213>
- High Resolution Paper <HR-101N>

Paper for printing photos:

- Glossy Photo Paper "Everyday Use" <GP-501/GP-508>
- Photo Paper Glossy <GP-701>
- Photo Paper Plus Glossy II <PP-201/PP-208/PP-301>
- Photo Paper Pro Luster <LU-101>
- Photo Paper Plus Semi-gloss <SG-201>
- Matte Photo Paper <MP-101>

Paper for making original goods:

- Photo Stickers (16 stickers per sheet) <PS-108>
- Photo Stickers (Free Cutting) <PS-208>
- Photo Stickers (Variety Pack) <PS-808>
- Restickable Photo Paper <RP-101>
- Removable Photo Stickers <PS-308R>
- Magnetic Photo Paper <MG-101/PS-508>
- **Light Fabric Iron-on Transfers** <LF-101>

- **Dark Fabric Iron-on Transfers** <DF-101>
- **Double sided Matte Paper** <MP-101D>

Paper other than genuine Canon paper

- Plain Paper (including recycled paper)
- Envelopes

➡ Paper Load Limit
➡ Paper Settings on the Printer Driver (Windows)

Page Sizes

You can use the following page sizes.

Note

- Page sizes and media types the printer supports differ depending on the OS you are using.

Standard sizes:

- Letter
- Legal
- Executive
- A6
- A5
- A4
- B5
- B-Oficio
- M-Oficio
- Foolscap
- Legal(India)
- KG/4"x6"(10x15)
- 5"x7"(13x18cm)
- 7"x10"(18x25cm)
- 8"x10"(20x25cm)
- L(89x127mm)
- 2L(127x178mm)
- Square 3.5"
- Square 5"
- Hagaki
- Hagaki 2

- Envelope Com 10
- Envelope DL
- Nagagata 3
- Nagagata 4
- Yougata 4
- Yougata 6
- Envelope C5
- Envelope Monarch
- Card 2.17"x3.58"

Special sizes

- Minimum size: 2.17 x 3.50 in. (55.0 x 89.0 mm)
- Maximum size: 8.50 x 47.24 in. (216.0 x 1200.0 mm) *

* When **Height** of **Page Size** is set to a value exceeding 26.61 in. (676 mm), **Media Type** is set to **Plain Paper**.

Paper Weight

You can use paper in the following weight range.

- Plain paper: From 17 to 28 lb (64 to 105 g /m^2)

Paper Load Limit

This section shows the paper load limits of the rear tray and the paper output tray.

- Paper Load Limits of Rear Tray
- Paper Load Limit of Paper Output Tray

Note

- Page sizes and media types differ depending on the country or region where the paper is sold. For details on page sizes and media types, access the Canon website.

Paper Load Limits of Rear Tray

Genuine Canon Paper

Paper for printing documents:

Media Name <Model No.>	Rear Tray
Canon Red Label Superior <WOP111>	Approx. 100 sheets
Canon Océ Office Colour Paper <SAT213>	Approx. 80 sheets
High Resolution Paper <HR-101N>*1	Approx. 80 sheets

Paper for printing photos:

Media Name <Model No.>	Rear Tray
Glossy Photo Paper "Everyday Use" <GP-501/GP-508>*2 Photo Paper Glossy <GP-701>*2 Photo Paper Plus Glossy II <PP-201/PP-208/PP-301>*2 Photo Paper Pro Luster <LU-101>*2 Photo Paper Plus Semi-gloss <SG-201>*2 Matte Photo Paper <MP-101>	A4, Letter, 5"x7"(13x18cm), 8"x10"(20x25cm), 2L(127x178mm): 10 sheets KG/4"x6"(10x15), L(89x127mm), Square 3.5", Square 5", Hagaki: 20 sheets

Paper for making original goods:

Media Name <Model No.>	Rear Tray
Photo Stickers (16 stickers per sheet) <PS-108> Photo Stickers (Free Cutting) <PS-208> Photo Stickers (Variety Pack) <PS-808> Restickable Photo Paper <RP-101> Removable Photo Stickers <PS-308R> Magnetic Photo Paper <MG-101/PS-508> **Light Fabric Iron-on Transfers** <LF-101> **Dark Fabric Iron-on Transfers** <DF-101>	1 sheet

Double sided Matte Paper <MP-101D>	

Paper other than Genuine Canon Paper

Common Name	Rear Tray
Plain Paper (including recycled paper)*1	Approx. 100 sheets (Legal, B-Oficio, M-Oficio, Foolscap, Legal(India): 10 sheets)
Envelopes	10 envelopes

*1 Normal feeding at maximum capacity may not be possible with some types of paper, or under very high or low temperature or humidity. In this case, load half the amount of paper or less.
*2 Feeding from a loaded stack of paper may leave marks on the printed side or prevent efficient feeding. In this case, load one sheet at a time.

Paper Load Limit of Paper Output Tray

Genuine Canon Paper

Paper for printing documents:

Media Name <Model No.>	Paper Output Tray
Canon Red Label Superior <WOP111> Canon Océ Office Colour Paper <SAT213> High Resolution Paper <HR-101N>	Approx. 50 sheets

Paper other than Genuine Canon Paper

Common Name	Paper Output Tray
Plain Paper (including recycled paper)	Approx. 50 sheets (Legal: 10 sheets)

When continuing printing with paper other than the above, we recommend removing already printed paper from the paper output tray to avoid smearing or discoloration.

Unsupported Media Types

Do not use the following types of paper. Using such paper will cause not only unsatisfactory results, but also the printer to jam or malfunction.

- Folded, curled, or wrinkled paper
- Damp paper
- Paper thinner than a postcard, including plain paper or notepad paper cut to a small size (when printing on paper smaller than A5)
- Picture postcards
- Postcards affixed with photos or stickers
- Envelopes with a double flap
- Envelopes with an embossed or treated surface
- Envelopes whose gummed flaps are already moistened and adhesive
- Any type of paper with holes
- Paper that is not rectangular
- Paper bound with staples or glue
- Paper with an adhesive surface on the back such as label seal
- Paper decorated with glitter, etc.

Handling Paper

- Be careful not to rub or scratch the surfaces of any types of paper when handling.
- Hold the paper as closely as possible to its edges and try not to touch the printing surface. The print quality may be degraded if the printing surface is smudged with sweat or oil that comes from your hands.
- Do not touch the printed surface until the ink is dried. Even when the ink is dried, be careful not to touch the printed surface as much as possible when handling. Due to the nature of the pigment ink, the ink on the printed surface may be removed when being rubbed or scratched.
- Take out only the necessary number of paper from the package, just before printing.
- To avoid curling, when you do not print, put unused paper back into the package and keep it on a level surface. And also, store it avoiding heat, humidity, and direct sunlight.

Economy Mode

By setting print quality to economy, the consumption of ink can be reduced. More printing is available compared with when print quality is set to standard.

- **Number of printable sheets (A4 plain paper)**

  Number of printable sheets per pigment black ink bottle

  Standard mode: 6,000 sheets

  Economy mode: 7,600 sheets

  Number of printable sheets per pigment color ink bottle

  Standard mode: 7,700 sheets

  Economy mode: 8,100 sheets

- **Measurement conditions**
  - Measurement images:

    Color printing: A4 color document ISO/IEC24712
  - Measurement method:

    Canon original
  - Paper type:

    Plain paper
  - Print driver setting:

    Setting to the default for plain paper (setting **Quality** to **Economy**).
  - Borderless printing:

    OFF

*The number of printable sheets is calculated based on the ink bottle filled from the second time on, instead of the ink bottle filled when the printer is used for the first time.

Printing

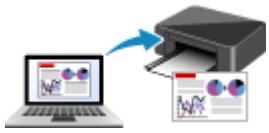

Printing from Computer

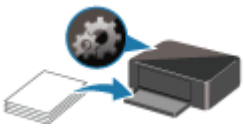

Paper Settings

Printing from Computer

- Printing from Application Software (Windows Printer Driver)
- Printing from Application Software (macOS)
- Printing Using Canon Application Software
- Printing from Chrome OS

Printing from Application Software (Windows Printer Driver)

- Basic Printing Setup Basic
- Main Controls (Basic Settings Tab)
- Set Media Type, Quality, etc. (Media/Quality Tab)
- Set the Layout of Printed Documents (Page Setup Tab)
- Overview of the Printer Driver
- Updating the Driver
- Sharing the Printer on a Network

Basic Printing Setup

In the **Basic Settings** tab, you can print in various ways according to your purpose.

1. Check that printer is turned on

2. Open printer driver's setup screen

3. Select Profile (A)

   Select the print settings according to your purpose in **Profiles** on the **Basic Settings** tab.
   If you select a print setting, **Paper Size** and **Media Type** will change automatically.

   Note

   - When the paper size to be printed is selected from **Printer Paper Size**, the zoom level is automatically set according to the selected paper size.
     To select a zoom level of your choice, add a checkmark to **Zoom** and enter a number.

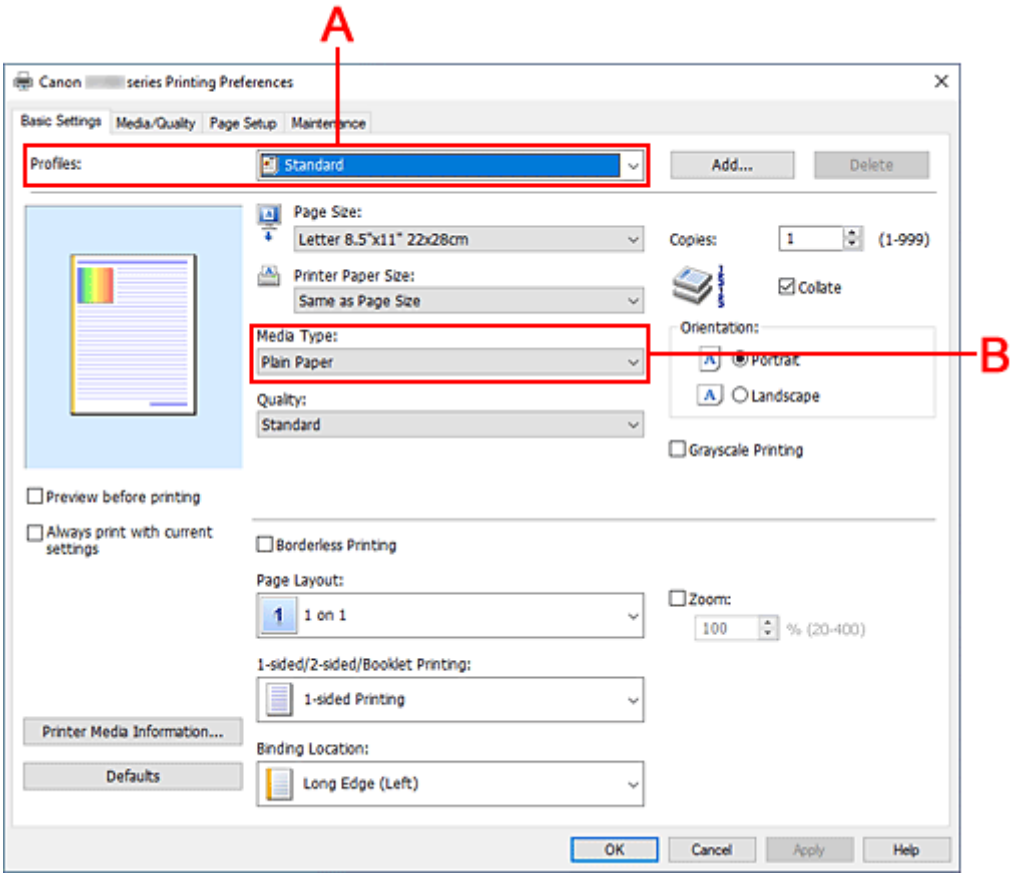

4. Select Media Type (B) According to Requirements

5. Set Paper

6. Click **OK**

Note

- For details about the paper information to be registered on the printer, see the following:
  - Paper Settings on the Printer Driver

Main Controls (Basic Settings Tab)

- Basic Settings Tab Description
- Paper Settings on the Printer Driver

Basic Settings Tab Description

The **Basic Settings** tab is for registering commonly used print settings. When you select a registered setting, the printer automatically switches to the preset items.

- Profiles
- Settings Preview
- Preview before printing
- Always print with current settings
- Page Size
- Printer Paper Size
- Media Type
- Quality
- Copies
- Collate
- Orientation
- Grayscale Printing
- Borderless Printing
- Page Layout
- Zoom
- 1-sided/2-sided/Booklet Printing
- Binding Location

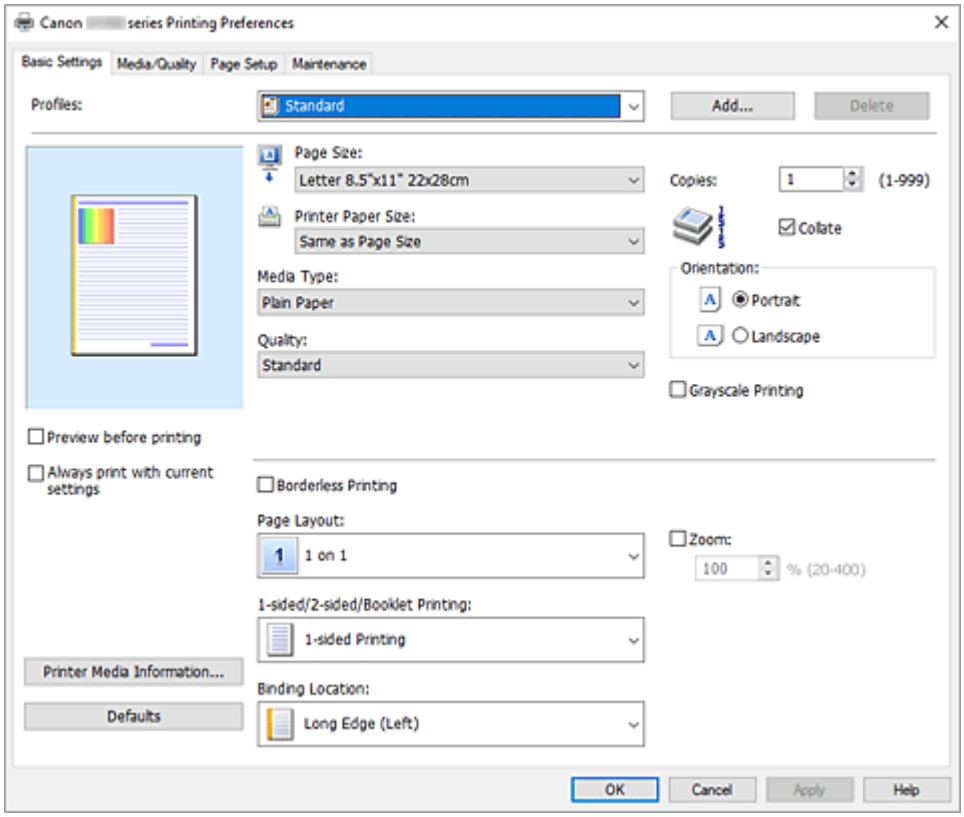

Profiles

The names and icons of frequently used printing profiles are registered. When you select a printing profile according to the purpose of the document, settings that match the purpose are applied.

You can also change a printing profile and register it under a new name. You can delete the registered printing profile.

Standard

These are the factory settings.

If **Page Size**, **Orientation**, and **Copies** were set from the application software, those settings have priority.

Photo Printing

If you select this setting when printing a photo, the photo paper and photo size generally used are set. The **Borderless Printing** check box is checked automatically.

If **Orientation** and **Copies** were set from the application software, those settings have priority.

Business Document

Select this setting when printing a general document.

If **Page Size**, **Orientation**, and **Copies** were set from the application software, those settings have priority.

Paper Saving

Select this setting to save paper when printing a general document. **Page Layout** is set to **2 on 1**, and **1-sided/2-sided/Booklet Printing** is set to **2-sided Printing (Manual)**.

If **Page Size**, **Orientation**, and **Copies** were set from the application software, those settings have priority.

Greeting Card

When selected for printing a greeting card, the **Media Type** is automatically set to **Inkjet Greeting Card**. The **Quality** is also set to **High**, and a check-mark is added to **Borderless Printing**.

Note

- You cannot change the order of print settings.

Add...

Displays the **Add to Profiles** dialog box.

Click this button when you want to save the information that you set on the **Basic Settings**, **Media/Quality**, and **Page Setup** tabs to **Profiles**.

Delete

Deletes a registered printing profile.

Select the name of the setting to be deleted from **Profiles**, and click **Delete**. When a confirmation message is displayed, click **OK** to delete the specified printing profile.

Note

- Printing profiles that are registered in the initial settings cannot be deleted.

Settings Preview

The paper illustration shows how the original will be laid out on a sheet of paper.

You can check an overall image of the layout.

Preview before printing

Shows what the print result will look like before you actually print the data.

Check this check box to display a preview before printing.

Uncheck this check box if you do not want to display a preview.

Always print with current settings

Prints documents with the current settings starting from the next print execution.

When you select this function and then close the printer driver setup window, the information that you set on the **Basic Settings**, **Media/Quality**, and **Page Setup** tabs are saved and printing with the same settings is possible starting from the next print execution.

Important

- If you log on with a different user name, the settings that were set when this function was enabled are not reflected in the print settings.
- If a setting was specified on the application software, it has priority.

Page Size

Selects a page size.

Ensure that you select the same page size as you selected within the application.

If you select **Custom...**, the **Custom Paper Size** dialog box opens and allows you to specify any vertical and horizontal dimensions for the paper size.

Printer Paper Size

Selects the size of paper actually loaded into the printer.

Normally, it will appear as **Same as Page Size**, and the document is printed with no scaling.

If you select a paper size that is smaller than the **Page Size**, the document size will be reduced. If you select a paper size that is larger, the document size will be enlarged.

Also if you select **Custom...**, the **Custom Paper Size** dialog box opens and allows you to specify any vertical and horizontal dimensions for the paper size.

Media Type

Selects a type of printing paper.

Select a media type that matches the paper that is loaded in the printer. This ensures that printing is carried out properly for the specified paper.

Quality

Selects your desired printing quality.

Select one of the following to set the print quality level that is appropriate for the purpose.

To set the print quality level individually, click the **Media/Quality** tab, and for **Quality**, select **Custom**. The **Set...** becomes enabled. Click **Set...** to open the **Custom** dialog box, and then specify the desired settings.

High

Gives priority to print quality over printing speed.

Standard

Prints with average speed and quality.

Economy

Reduces the amount of ink used when printing.

Note

- Selecting **Economy** in **Quality** reduces ink consumption. This means that you can print more than if you have **Standard** selected.
  For details on Economy Mode, see "Economy Mode."

Copies

Specifies the number of copies you want to print. You can specify a value from 1 to 999.

Important

- When the application software that you used to create the document has the same function, specify the settings on the printer driver. However, if the print results are not acceptable, specify the function settings on the application software.

Collate

Check this check box to group together the pages of each copy when you want to print multiple copies. Uncheck this check box when you want to print with all pages of the same page number grouped together.

Important

- When the application software that you used to create the document has the same function, give priority to the printer driver settings. However, if the print results are not acceptable, specify the function settings on the application software. When you specify the number of copies and the printing order with both the application and this printer driver, the number of copies may be multiplied numbers of the two settings or the specified printing order may not be enabled.

Orientation

Selects the printing orientation.

If the application used to create your document has a similar function, select the same orientation that you selected in that application.

Portrait

Prints the document so that its top and bottom positions are unchanged relative to the paper feed direction. This is the default setting.

Landscape

Prints the document by rotating it 90 degrees relative to the paper feed direction.

You can change the rotation direction by going to the **Maintenance** tab, opening the **Custom Settings** dialog box, and then using **Rotate 90 degrees left when orientation is [Landscape]** check box.

To rotate the document 90 degrees to the left when printing, select the **Rotate 90 degrees left when orientation is [Landscape]** check box.

Grayscale Printing

This function converts the data to monochrome data when printing your document.

Borderless Printing

Performs borderless printing without any margins on the paper.

With the borderless printing function, the document to be printed is enlarged, so that it extends slightly off the paper. In other words, the document is printed without any margin.

To adjust the amount that the document extends beyond the paper, click the **Page Setup** tab, add a checkmark to **Borderless Printing**, and enter the value in **Amount of Extension**.

Page Layout

Selects the size of the document you want to print and the type of printing.

1 on 1 to 16 on 1

Multiple pages of document can be printed on one sheet of paper.

To change the page order, click **Preferences...**. In the **Page Layout Printing** dialog box that appears, specify **Page Order**.

Poster (1 x 2) to Poster (4 x 4)

This function enables you to enlarge the image data and divide the enlarged data into several pages to be printed. You can also glue together these sheets of paper to create large printed matter, such as a poster.

Preferences...

Opens the **Poster Printing** dialog box.

Click this button to set details on tiling/poster printing.

Zoom

Specifies an enlargement or reduction ratio for the document you want to print.

1-sided/2-sided/Booklet Printing

1-sided Printing

Select when performing single-sided printing.

2-sided Printing (Manual)

Select when performing duplex printing.

Booklet Printing

The booklet printing function allows you to print data for a booklet. Data is printed on both sides of the paper. This type of printing ensures that pages can be collated properly, in page number order, when the printed sheets are folded and stapled at the center.

Preferences...

Opens the **Booklet Printing** dialog box.

Click this button to set details on booklet printing.

Binding Location

Selects the stapling margin position. The printer analyzes the **Orientation** and **Page Layout** settings, and automatically selects the best stapling margin position. Check **Binding Location**, and select from the list to change it.

To specify the width of the binding margin, set it from the **Page Setup** tab.

Printer Media Information...

Displays **Printer Media Information** dialog box.

You can check the printer settings and apply the checked settings to the printer driver.

Defaults

Restores all the settings you have changed to their default values.

Click this button to return all settings on the **Basic Settings**, **Media/Quality**, and **Page Setup** tabs to their default values (factory settings).

Add to Profiles dialog box

This dialog box allows you to save the information that you set on the **Basic Settings**, **Media/Quality**, and **Page Setup** tabs and add the information to the **Profiles** list on the **Basic Settings** tab.

Name

Enter the name for the printing profile you wish to save.

Up to 255 characters can be entered.

The name appears, with its associated icon, in the **Profiles** list on the **Basic Settings** tab.

Options...

Opens the **Add to Profiles** dialog box.

Changes the details of printing profile to be saved.

Add to Profiles dialog box

Select the icons of the printing profiles to be registered to **Profiles**, and change the items to be saved in the printing profiles.

Icon

Select the icon for the printing profile you wish to save.

The selected icon appears, with its name, in the **Profiles** list on the **Basic Settings** tab.

Save the paper size setting

Saves the paper size to the printing profile in **Profiles**.

To apply the saved paper size when the printing profile is selected, check this check box.

If this check box is unchecked, the paper size is not saved, and consequently the paper size setting is not applied when the printing profile is selected. Instead the printer prints with the paper size specified with the application software.

Save the orientation setting

Saves the **Orientation** to the printing profile in **Profiles**.

To apply the saved print orientation when the printing profile is selected, check this check box.

If this check box is unchecked, the print orientation is not saved, and consequently the **Orientation** setting is not applied when the printing profile is selected. Instead the printer prints with the print orientation specified with the application software.

Save the copies setting

Saves the **Copies** setting to the printing profile in **Profiles**.

To apply the saved copies setting when the printing profile is selected, check this check box.

If this check box is unchecked, the copies setting is not saved, and consequently the **Copies** setting is not applied when the printing profile is selected. Instead the printer prints with the copies setting specified with the application software.

Custom Paper Size dialog box

This dialog box allows you to specify the size (width and height) of the custom paper.

Units

Select the unit for entering a user-defined paper size.

Paper Size

Specifies the **Width** and the **Height** of the custom paper. Measurement is shown according to the units specified in **Units**.

Page Layout Printing dialog box

1This dialog box allows you to select the number of document pages to be placed on one sheet of paper, the page order, and whether a page border line is to be printed around each document page. The settings specified in this dialog box can be confirmed in the settings preview on the printer driver.

Page Order

Specifies the document orientation to be printed on a sheet of paper.

Page Border

Prints a page border line around each document page. Check this check box to print the page border line.

Poster Printing dialog box

This dialog box allows you to select the size of the image to be printed. You can also make settings for cut lines and paste markers which are convenient for pasting together the pages into a poster.
The settings specified in this dialog box can be confirmed in the settings preview on the printer driver.

Print "Cut/Paste" in margins

Specifies whether to print the words "Cut" and "Paste" in the margins. These words serve as guidelines for pasting together the pages into a poster. Check this check box to print the words.

Note

- Depending on the environment of the printer driver you are using, this function may not be available.

Print "Cut/Paste" lines in margins

Specifies whether to print cut lines that serve as guidelines for pasting together the pages into a poster. Check this check box to print the cut lines.

Print page range

Specifies the printing range. Select **All** under normal circumstances.
Select **Pages** to specify a specific page or range.

Note

- If some of the pages have not been printed well, specify the pages that do not need to be printed by clicking them in the settings preview of the **Page Setup** tab. Only the pages shown on the screen will be printed this time.

Booklet Printing dialog box

This dialog box allows you to set how to bind the document as a booklet. Printing only on one side and printing a page border, can also be set in this dialog box.
The settings specified in this dialog box can be confirmed in the settings preview on the printer driver.

Preview Icon

Shows the settings made on the **Booklet Printing** dialog box.
You can check what the document will look like when printed as a booklet.

Margin for stapling

Specifies which side of the booklet is to be stapled.

Insert blank page

Selects whether to print the document on one side or both sides of the booklet.
Check this check box to print the document on one side of the booklet and select the side to be left blank from the list.

Margin

Specifies the width of the stapling margin.

The specified width becomes the stapling margin from the center of the sheet.

Page Border

Prints a page border line around each document page.

Check this check box to print the page border line.

Printer Media Information dialog box

This dialog box allows you to check the printer settings and apply the checked settings to the printer driver.

Paper Source

The paper source of the media is being displayed.

Media Type

Displays the **Media Type** that is currently set on the printer.

To apply the displayed setting to the printer driver, click **Set**.

Page Size

Displays the **Page Size** that is currently set on the printer.

To apply the displayed setting to the printer driver, click **Set**.

Paper Settings on the Printer Driver

When you use this printer, selecting a media type that matches the print purpose will help you achieve the best print results.
Depending on the media type you are using, specify the media type settings on the printer driver as described below.

Canon genuine papers (Document Printing)

Media name <Model No.>	Media Type in the printer driver
Canon Red Label Superior <WOP111>	**Plain Paper**
Canon Océ Office Colour Paper <SAT213>	**Plain Paper**
High Resolution Paper <HR-101N>	**High Resolution Paper**

Canon genuine papers (Photo Printing)

Media name <Model No.>	Media Type in the printer driver
Photo Paper Plus Glossy II <PP-201/PP-208/PP-301>	**Photo Paper Plus Glossy II**
Photo Paper Pro Luster <LU-101>	**Photo Paper Pro Luster**
Photo Paper Plus Semi-gloss <SG-201>	**Photo Paper Plus Semi-gloss**
Glossy Photo Paper "Everyday Use" <GP-501/GP-508>	**Glossy Photo Paper**
Photo Paper Glossy <GP-701>	**Glossy Photo Paper**
Matte Photo Paper <MP-101>	**Matte Photo Paper**

Canon genuine papers (Original Product)

Media name <Model No.>	Media Type in the printer driver
Restickable Photo Paper <RP-101>	**Glossy Photo Paper**
Removable Photo Stickers <PS-308R>	**Glossy Photo Paper**
Magnetic Photo Paper <MG-101/PS-508>	**Glossy Photo Paper**
Light Fabric Iron-on Transfers <LF-101>	**Light Fabric Iron-on Transfers**
Dark Fabric Iron-on Transfers <DF-101>	**Dark Fabric Iron-on Transfers**
Double sided Matte Paper <MP-101D>	**Matte Photo Paper**

Commercially available papers

Media name	Media Type in the printer driver
Plain Paper (including recycled paper)	**Plain Paper**
Envelopes	**Envelope**
Greeting Cards	**Inkjet Greeting Card**
Card Stock	**Card Stock**

Printing on Postcards

1. Load postcard on the printer

2. Open the printer driver setup window

3. Select commonly used settings

   Display the **Basic Settings** tab, and for **Profiles**, select **Standard**.

4. Select the paper size

   For **Printer Paper Size**, select **Hagaki 100x148mm** or **Hagaki 2 200x148mm**.

   Important

   - Return postcards can be used only when you print them from the computer.
   - When printing a return postcard, always set the paper size to **Hagaki 2 200x148mm** from your application software or the printer driver.
   - Do not fold the return postcard. If a crease is formed, the printer will not be able to feed the postcard properly, and this condition will cause line shifts or a paper jam.
   - With return postcards, borderless printing cannot be used.

5. Select the media type

   Select the Hagaki you want to use from **Hagaki** in **Media Type**.

   Important

   - This printer cannot print on postcards that have photos or stickers attached.
   - You will get cleaner printing if you print the message side first and then print the address side.
   - The paper settings on the printer driver are different, depending on whether you are printing on the address side or the message side.

6. Set the print orientation

   To print the address horizontally, set **Orientation** to **Landscape**.

7. Select the print quality

   For **Quality**, select the quality according to your purpose.

8. Click **OK**

   When you perform printing, the data will be printed onto the postcard.

Setting Up Envelope Printing

1. Load envelope on the printer

2. Open the printer driver setup window

3. Select the media type

   Select **Envelope** from **Media Type**.

4. Select the paper size

   When the **Envelope Size Setting** dialog box is displayed, select the envelope size you want to use, and then click **OK**.

5. Set the orientation

   To print the addressee horizontally, select **Landscape** for **Orientation**.

   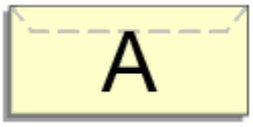

   Note

   - If **Envelope Com 10**, **Envelope DL**, **Yougata 4 4.13"x9.25"**, **Yougata 6 3.86"x7.48"**, **Envelope C5**, or **Envelope Monarch 3.88"x7.5" 98.4x190.5mm** is selected for **Printer Paper Size**, the printer rotates the paper 90 degrees to the left to print, regardless of the **Rotate 90 degrees left when orientation is [Landscape]** setting for **Custom Settings** in the **Maintenance** tab.

6. Select the print quality

   For **Quality**, select the quality according to your purpose.

7. Click **OK**

   When you perform print, the information is printed on the envelope.

Important

- When you perform envelope printing, guide messages are displayed.
  To hide the guide messages, check the **Do not show this message again** check box.
  To show the guide again, click the **View Printer Status** button on the **Maintenance** tab, and start the Canon IJ Status Monitor.
  Then click **Envelope Printing** from **Display Guide Message** of the **Option** menu to enable the setting.

Registering a Frequently Used Printing Profile

You can register the frequently used printing profile to **Profiles** on the **Basic Settings** tab. Unnecessary printing profiles can be deleted at any time.

Registering a Printing Profile

1. Open the printer driver setup window

2. Set the necessary items

   From **Profiles** on the **Basic Settings** tab, select the printing profile to be used and if necessary, change each of the settings.
   You can also register necessary items on the **Media/Quality** and **Page Setup** tabs.

3. Click **Add...**

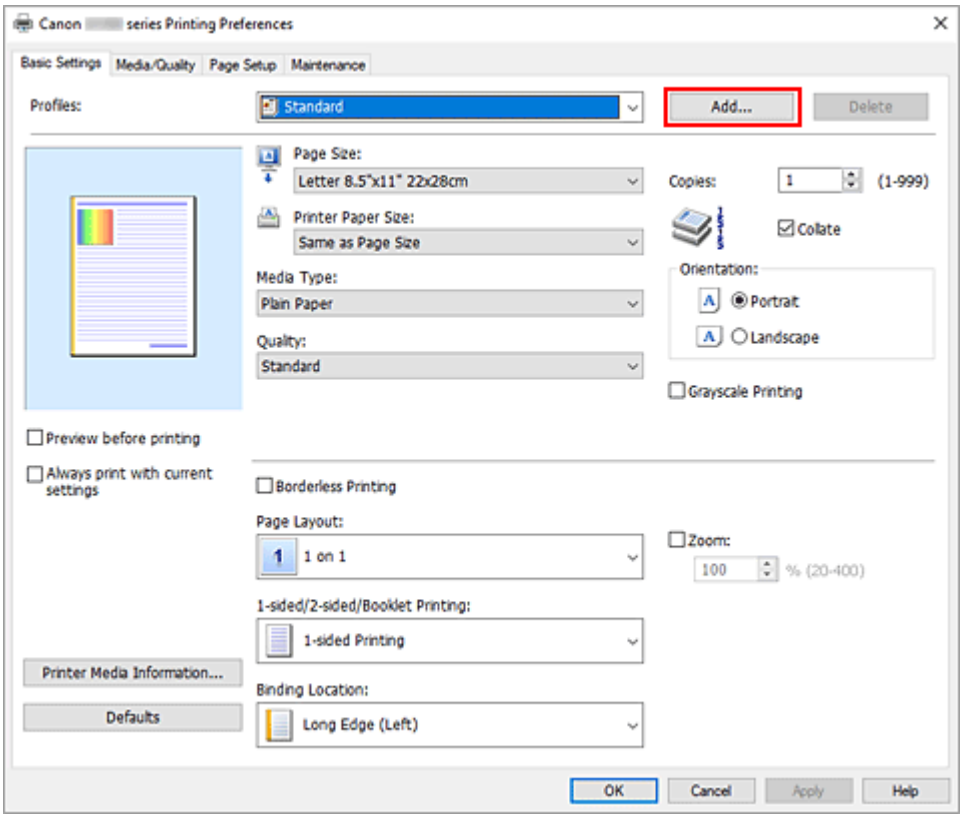

   The **Add to Profiles** dialog box opens.

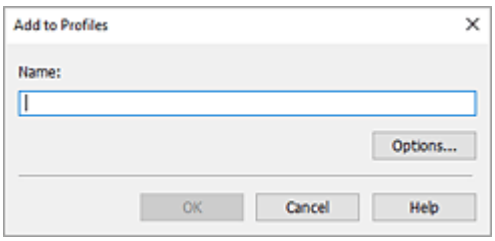

4. Save the settings

   Enter a name for the print settings to register in the **Name** field. If necessary, click **Options...**, set the items, and then click **OK**.
   In the **Add to Profiles** dialog box, click **OK** to save the print settings and return to the **Basic Settings** tab.
   The name and icon are displayed in **Profiles**.

Important

- To save the page size, orientation, and number of copies that was set in each sheet, click **Options...**, and check each item.

Note

- When you re-install the printer driver or upgrade the printer driver version, the print settings that are already registered will be deleted from **Profiles**.
  Registered print settings cannot be saved and preserved. If a profile is deleted, register the print settings again.

Deleting Unnecessary Printing Profile

1. Select the printing profile to be deleted

   Select the printing profile you want to delete from the **Profiles** list on the **Basic Settings** tab.

2. Delete the printing profile

   Click **Delete**. When the confirmation message appears, click **OK**.
   The selected printing profile is deleted from the **Profiles** list.

Note

- Printing profiles that are registered in the initial settings cannot be deleted.

Set Media Type, Quality, etc. (Media/Quality Tab)

- **Media/Quality Tab Description**
- **Adjust Colors**
- **Specifying Color Correction**
  - Optimal Photo Printing of Image Data
  - Adjusting Colors with the Printer Driver
  - Printing with ICC Profiles

Media/Quality Tab Description

The **Media/Quality** tab allows you to create a basic print setup in accordance with the media type. You can also adjust the print quality and color tones.

- Settings Preview
- Media Type
- Paper Source
- Quality
- Color/Intensity
- Grayscale Printing
- Preview before printing

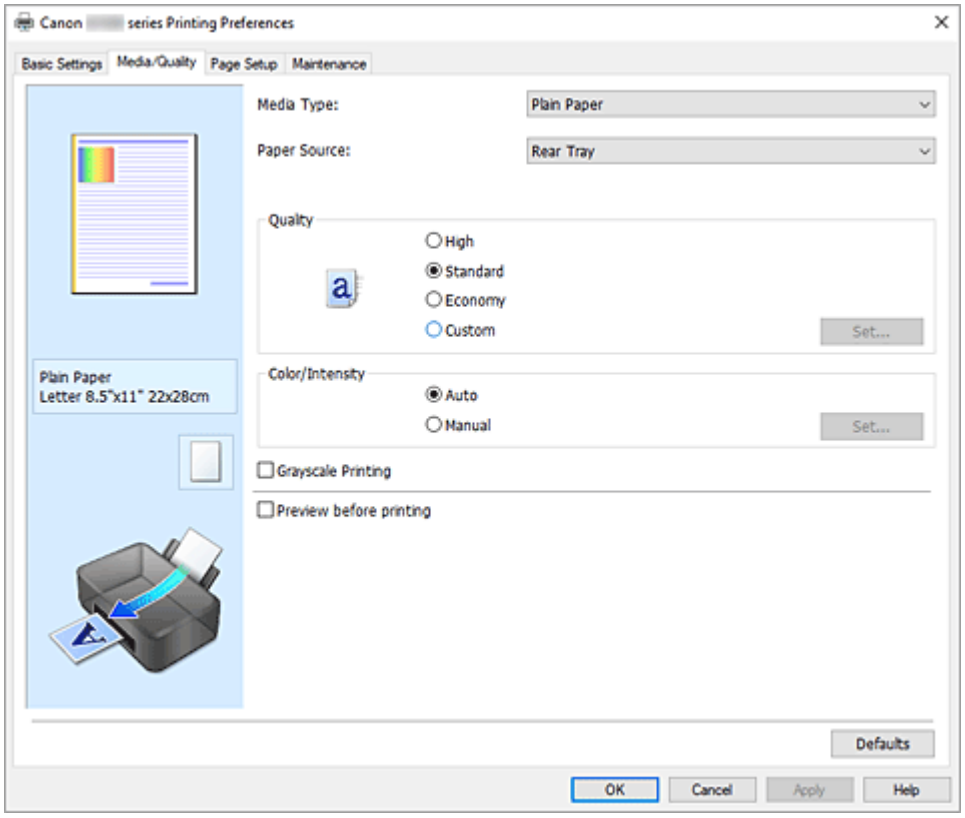

Settings Preview

The paper illustration shows how the original will be laid out on a sheet of paper.
You can check an overall image of the layout.

Media Type

Selects a type of printing paper.
Select a media type that matches the paper that is loaded in the printer. This ensures that printing is carried out properly for the specified paper.

Paper Source

Shows the source from which paper is supplied.

Rear Tray

Paper is always supplied from the rear tray.

Quality

Selects your desired printing quality.

Select one of the following to set the print quality level that is appropriate for the purpose.

Important

- Depending on the **Media Type** settings, the same print results may be produced even if the **Quality** is changed.

High

Gives priority to print quality over printing speed.

Standard

Prints with average speed and quality.

Economy

Reduces the amount of ink used when printing.

Note

- Selecting **Economy** in **Quality** reduces ink consumption. This means that you can print more than if you have **Standard** selected.
  For details on Economy Mode, see "Economy Mode."

Custom

Select this to set the print quality level individually.

Set...

Select **Custom** in **Quality** to make it clickable.

Open the **Custom** dialog box to set individual print quality levels.

Color/Intensity

Selects color adjustment method.

Auto

Cyan, **Magenta**, **Yellow**, **Brightness**, **Contrast**, and so on are adjusted automatically.

Manual

Select when you set the individual settings such as **Cyan**, **Magenta**, **Yellow**, **Brightness**, **Contrast**, etc. and **Color Correction** method.

Set...

Select **Manual** for **Color/Intensity** to enable this button.

In the **Manual Color Adjustment** dialog box, you can adjust individual color settings such as **Cyan**, **Magenta**, **Yellow**, **Brightness**, and **Contrast** on the **Color Adjustment** tab, and select the **Color Correction** method on the **Matching** tab.

Note

- If you want to use an ICC profile to adjust colors, use the **Manual Color Adjustment** dialog box to set the profile.

Grayscale Printing

This function converts the data to monochrome data when printing your document.

Check this check box to print a color document in monochrome.

Preview before printing

Shows what the print result will look like before you actually print the data.

Check this check box to display a preview before printing.

Defaults

Restores all the settings you have changed to their default values.
Clicking this button restores all the settings on the current screen to their default values (factory settings).

Custom dialog box

Set the quality level, and select the desired print quality.

Quality

You can use the slider bar to adjust the print quality level.

Important

- Certain print quality levels cannot be selected depending on the settings of **Media Type**.

Note

- The **High**, **Standard**, or **Economy** print quality modes are linked with the slider bar. Therefore when the slider bar is moved, the corresponding quality and value are displayed on the left. This is the same as when the corresponding radio button is selected for **Quality** on the **Media/Quality** tab.

Color Adjustment Tab

This tab allows you to adjust the color balance by changing the settings of the **Cyan**, **Magenta**, **Yellow**, **Brightness**, and **Contrast** options.

Preview

Shows the effect of color adjustment.
The color and brightness change when each item is adjusted.

Note

- The graphic is in monochrome when the **Grayscale Printing** check box is checked.

View Color Pattern

Displays a pattern for checking color changes produced by color adjustment.
If you want to display the preview image with a color pattern, check this check box.

Cyan / Magenta / Yellow

Adjusts the strengths of **Cyan**, **Magenta**, and **Yellow**.
Moving the slider to the right makes a color stronger, and moving the slider to the left makes a color weaker.
You can also directly enter a value linked to the slider. Enter a value in the range from -50 to 50.
This adjustment changes the relative amount of ink of each color used, which alters the total color balance of the document. Use your application if you want to change the total color balance significantly. Use the printer driver only if you want to adjust the color balance slightly.

Brightness

Adjusts the brightness of your print. You cannot change the levels of pure white and black. However, the brightness of the colors between white and black can be changed. Moving the slider to the right brightens (dilutes) the colors, and moving the slider to the left darkens (intensifies) the colors. You

can also directly enter brightness values that are linked to the slider bar. Enter a value in the range from -50 to 50.

Contrast

Adjusts the contrast between light and dark in the image to be printed.
Moving the slider to the right increases the contrast, moving the slider to the left decreases the contrast.
You can also directly enter a value linked to the slider. Enter a value in the range from -50 to 50.

Matching Tab

Allows you to select the method for adjusting colors to match the type of document to be printed.

Color Correction

Allows you to select **Driver Matching**, **ICM**, or **None** to match the purpose of the print operation.

Driver Matching

With Canon Digital Photo Color, you can print sRGB data with color tints that most people prefer.

ICM

Adjusts the colors by using an ICC profile when printing.

Important

- If the application software is set so that ICM is disabled, **ICM** is unavailable for **Color Correction** and the printer may not be able to print the image data properly.

None

Disables color adjustment with the printer driver. Select this value when you are specifying an individually created printing ICC profile in an application software to print data.

Set the Layout of Printed Documents (Page Setup Tab)

- Page Setup Tab Description
- Setting the Number of Copies and Printing Order
- Perform Borderless Printing

Page Setup Tab Description

The **Page Setup** tab allows you to determine how a document is to be arranged on the paper. Also, this tab allows you to set the number of copies and the order of printing. If the application which created the document has a similar function, set them with the application.

- Settings Preview
- Page Size
- Printer Paper Size
- Copies
- Print from Last Page
- Collate
- Orientation
- Rotate 180 degrees
- Borderless Printing
- Page Layout
- Zoom
- 1-sided/2-sided/Booklet Printing
- Binding Location
- Specify Margin
- Print Options
- Stamp/Background

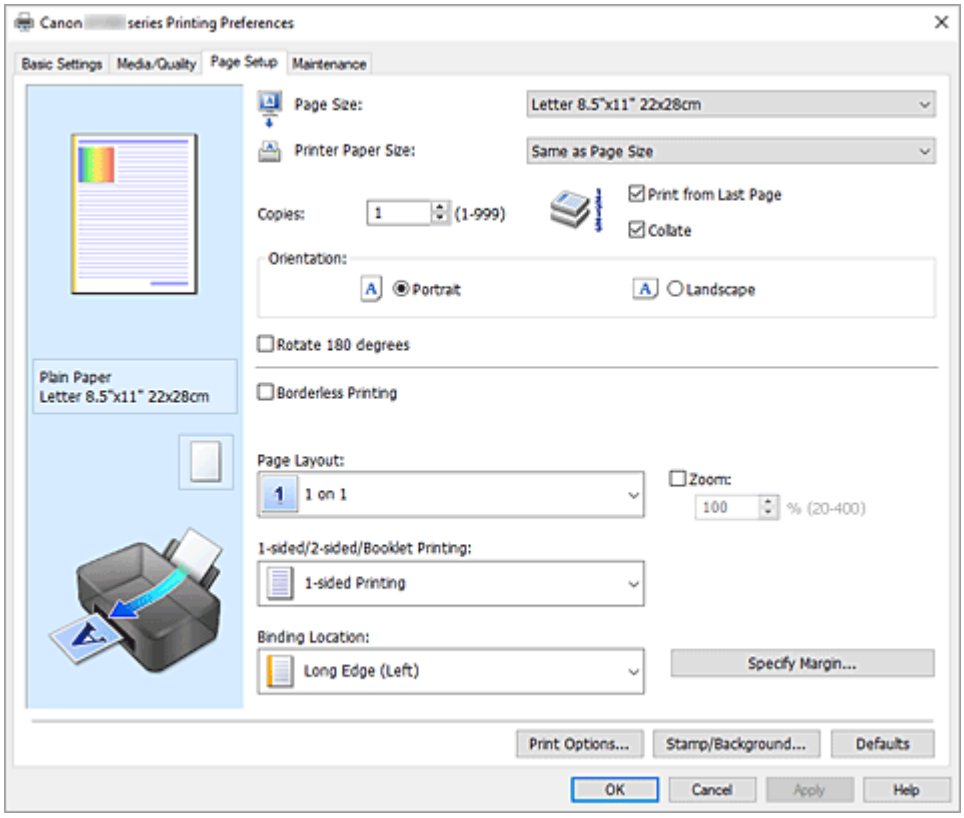

Settings Preview

The paper illustration shows how the original will be laid out on a sheet of paper.
You can check an overall image of the layout.

Page Size

Selects a page size.

Ensure that you select the same page size as you selected within the application.

If you select **Custom...**, the **Custom Paper Size** dialog box opens and allows you to specify any vertical and horizontal dimensions for the paper size.

Printer Paper Size

Selects the size of paper actually loaded into the printer.

The default setting is **Same as Page Size** to perform normal-sized printing.

If you select a paper size that is smaller than the **Page Size**, the document size will be reduced. If you select a paper size that is larger, the document size will be enlarged.

Also if you select **Custom...**, the **Custom Paper Size** dialog box opens and allows you to specify any vertical and horizontal dimensions for the paper size.

Copies

Specifies the number of copies you want to print. You can specify a value from 1 to 999.

Important

- If the application used to create your document has a similar function, specify the number of copies with the application without specifying it here.

Print from Last Page

Check this check box when you want to print from the last page in order. If you do this, you do not need to sort the pages into their correct order after printing.

Uncheck this check box to print your document in normal order, starting from the first page.

Collate

Check this check box to group together the pages of each copy when you want to print multiple copies.

Uncheck this check box when you want to print with all pages of the same page number grouped together.

Important

- When the application software that you used to create the document has the same function, give priority to the printer driver settings. However, if the print results are not acceptable, specify the function settings on the application software. When you specify the number of copies and the printing order with both the application and this printer driver, the number of copies may be multiplied numbers of the two settings or the specified printing order may not be enabled.

Orientation

Selects the printing orientation.

If the application used to create your document has a similar function, select the same orientation that you selected in that application.

Portrait

Prints the document so that its top and bottom positions are unchanged relative to the paper feed direction. This is the default setting.

Landscape

Prints the document by rotating it 90 degrees relative to the paper feed direction.

You can change the rotation direction by going to the **Maintenance** tab, opening the **Custom Settings** dialog box, and then using **Rotate 90 degrees left when orientation is [Landscape]** check box.

To rotate the document 90 degrees to the left when printing, select the **Rotate 90 degrees left when orientation is [Landscape]** check box.

Rotate 180 degrees

Prints the document by rotating it 180 degrees against the paper feed direction.

The width of print area and the amount of extension that are configured in other application software will be reversed vertically and horizontally.

Borderless Printing

Chooses whether you are printing on a full page without any page margins or printing with page margins.

In borderless printing, originals are enlarged to extend slightly off the paper. Thus, printing can be performed without any margins (border).

Use **Amount of Extension** to adjust how much of the document extends off the paper during borderless printing.

Amount of Extension

Adjusts how much of the document extends off the paper during borderless printing.

Moving the slider to the right increases the amount of extension and allows you to perform borderless printing with no problems.

Moving the slider to the left reduces the amount of extension and expands the range of the document to print.

Page Layout

Selects the size of the document you want to print and the type of printing.

1 on 1 to 16 on 1

Multiple pages of document can be printed on one sheet of paper. To change the page order, click **Preferences...**. In the **Page Layout Printing** dialog box that appears, specify **Page Order**.

Poster (1 x 2) to Poster (4 x 4)

This function enables you to enlarge the image data and divide the enlarged data into several pages to be printed.

You can also glue together these sheets of paper to create large printed matter, such as a poster.

Preferences...

Opens the **Poster Printing** dialog box.

Click this button to set details on tiling/poster printing.

Zoom

Specifies an enlargement or reduction ratio for the document you want to print.

1-sided/2-sided/Booklet Printing

1-sided Printing

Select when performing single-sided printing.

2-sided Printing (Manual)

Select when performing duplex printing.

Booklet Printing

The booklet printing function allows you to print data for a booklet. Data is printed on both sides of the paper. This type of printing ensures that pages can be collated properly, in page number order, when the printed sheets are folded and stapled at the center.

Preferences...

Opens the **Booklet Printing** dialog box. Click this button to set details on booklet printing.

Binding Location

Selects the stapling margin position.

The printer analyzes the **Orientation** and **Page Layout** settings, and automatically selects the best stapling margin position. Check **Binding Location**, and select from the list to change it. To specify the width of the binding margin, set it from the **Page Setup** tab.

Specify Margin...

Opens the **Specify Margin** dialog box. You can specify the width of the margin.

Print Options...

Opens the **Print Options** dialog box.

Changes detailed printer driver settings for print data that is sent from applications.

Stamp/Background...

Opens the **Stamp/Background** dialog box.

The **Stamp** function allows you to print a stamp text or a bitmap over or behind document data. It also allows you to print date, time and user name. The **Background** function allows you to print a light illustration behind the document data.

Depending on the environment, **Stamp** and **Background** may not be available.

Defaults

Restores all the settings you have changed to their default values.

Clicking this button restores all the settings on the current screen to their default values (factory settings).

Custom Paper Size dialog box

This dialog box allows you to specify the size (width and height) of the custom paper.

Units

Select the unit for entering a user-defined paper size.

Paper Size

Specifies the **Width** and the **Height** of the custom paper. Measurement is shown according to the units specified in **Units**.

Page Layout Printing dialog box

This dialog box allows you to select the number of document pages to be placed on one sheet of paper, the page order, and whether a page border line is to be printed around each document page.

The settings specified in this dialog box can be confirmed in the settings preview on the printer driver.

Page Order

Specifies the document orientation to be printed on a sheet of paper.

Page Border

Prints a page border line around each document page.

Check this check box to print the page border line.

Poster Printing dialog box

This dialog box allows you to select the size of the image to be printed. You can also make settings for cut lines and paste markers which are convenient for pasting together the pages into a poster.
The settings specified in this dialog box can be confirmed in the settings preview on the printer driver.

Print "Cut/Paste" in margins

Specifies whether to print the words "Cut" and "Paste" in the margins. These words serve as guidelines for pasting together the pages into a poster.
Check this check box to print the words.

Note

- Depending on the environment of the printer driver you are using, this function may not be available.

Print "Cut/Paste" lines in margins

Specifies whether to print cut lines that serve as guidelines for pasting together the pages into a poster.
Check this check box to print the cut lines.

Print page range

Specifies the printing range. Select **All** under normal circumstances.
Select **Pages** to specify a specific page or range.

Note

- If some of the pages have not been printed well, specify the pages that do not need to be printed by clicking them in the settings preview of the **Page Setup** tab. Only the pages shown on the screen will be printed this time.

Booklet Printing dialog box

This dialog box allows you to set how to bind the document as a booklet. Printing only on one side and printing a page border, can also be set in this dialog box.
The settings specified in this dialog box can be confirmed in the settings preview on the printer driver.

Preview Icon

Shows the settings made on the **Booklet Printing** dialog box.
You can check what the document will look like when printed as a booklet.

Margin for stapling

Specifies which side of the booklet is to be stapled.

Insert blank page

Selects whether to print the document on one side or both sides of the booklet.
Check this check box to print the document on one side of the booklet and select the side to be left blank from the list.

Margin

Specifies the width of the stapling margin.
The specified width becomes the stapling margin from the center of the sheet.

Page Border

Prints a page border line around each document page.
Check this check box to print the page border line.

Specify Margin dialog box

This dialog box allows you to specify the margin width for the side to be stapled. If a document does not fit on one page, the document is reduced when printed.

Margin

Specifies the width of the stapling margin.
The width of the side specified by **Binding Location** becomes the stapling margin.

Print Options dialog box

Makes changes to print data that is sent to the printer.

Depending on the environment, this function may not be available.

Disable ICM required from the application software

Disables the ICM function required from the application software.
When an application software uses Windows ICM to print data, unexpected colors may be produced or the printing speed may decrease. If these problems occur, checking this check box may resolve the problems.

Important

- Uncheck this check box under normal circumstances.
- This function does not work when **ICM** is selected for **Color Correction** on the **Matching** tab of the **Manual Color Adjustment** dialog box.

Disable the color profile setting of the application software

Checking this check box disables information in the color profile that was set on the application software.
When the information in the color profile set on the application software is output to the printer driver, the print result may contain unexpected colors. If this happens, checking this check box may resolve the problem.

Important

- Uncheck this check box under normal circumstances.
- Even when this check box is checked, only some of the information in the color profile is disabled, and the color profile can still be used for printing.

Ungroup Papers

Sets the display method of **Media Type**, **Page Size**, and **Printer Paper Size**.
To display the items separately, select the check box.
To display the items as a group, clear the check box.

Do not allow application software to compress print data

Compression of the application software print data is prohibited.
If the print result has missing image data or unintended colors, selecting this check box may improve the condition.

Important

- Uncheck this check box under normal circumstances.

Print after creating print data by page

The print data is created in page units, and printing starts after the processing of one page of print data is complete.

If a printed document contains unintended results such as streaks, selecting this check box may improve the results.

Important

- Uncheck this check box under normal circumstances.

Prevention of Print Data Loss

You can reduce the size of the print data that was created with the application software and then print the data.

Depending on the application software being used, the image data may be cut off or may not be printed properly. In such cases, select **On**. If you will not be using this function, select **Off**.

Important

- When using this function, the print quality may drop depending on the print data.

Unit of Print Data Processing

Selects the processing unit of the print data to be sent to the printer.

Select **Recommended** under normal circumstances.

Important

- A large amount of memory may be used for certain settings.
  Do not change the setting if your computer has a small amount of memory.

Print With

Specify the ink to be used when printing.

Select from **All Colors (Default)** and **Black Only**.

Important

- When the following settings are specified, **Black Only** does not function because the printer uses an ink other than black to print documents.
  - Other than **Plain Paper**, **Envelope**, **Ink Jet Hagaki (A)**, **Hagaki K (A)**, **Hagaki (A)**, or **Hagaki** is selected for **Media Type** on the **Media/Quality** tab
  - A checkmark is added to **Borderless Printing** on the **Page Setup** tab
- Do not detach the print head that is not in use. Printing cannot be performed while either print head is detached.

Stamp/Background dialog box

Depending on the environment, **Stamp** and **Background** may not be available.

The **Stamp/Background** dialog box allows you to print a stamp and/or background over or behind the document pages. In addition to the pre-registered ones, you can register and use your original stamp or background.

Stamp

Stamp printing is a function that prints a stamp over a document.
Check this check box and select a title from the list to print a stamp.

Define Stamp...

Opens the **Stamp Settings** dialog box.
You can check the details of a selected stamp or save a new stamp.

Place stamp over text

Sets how the stamp is to be printed over the document.
Check the **Stamp** check box to enable this.
Check this check box to print a stamp over the printed document page. The printed data may be hidden behind the stamp.
Uncheck this check box to print the document data over the stamp. The printed data will not be hidden behind the stamp. However, the sections of the stamp that are overlapped by the document may be hidden.

Stamp first page only

Selects whether the stamp is to be printed on the first page only or on all pages when the document has two or more pages.
Check the **Stamp** check box to enable this.
Check this check box to print a stamp on the first page only.

Background

Background printing is a function that allows you to print an illustration or a similar object (bitmap) behind the document.
Check this check box to print a background and select a title from the list.

Select Background...

Opens the **Background Settings** dialog box.
You can register a bitmap as a background, and change layout method and intensity of the selected background.

Background first page only

Selects whether to print the background on the first page only or print on all pages when the document has two or more pages.
Check the **Background** check box to enable this.
Check this check box to print a background on the first page only.

Stamp Tab

The Stamp tab allows you to set the text and bitmap file (.bmp) to be used for a stamp.

Preview Window

Shows the status of the stamp configured in each tab.

Stamp Type

Specifies the stamp type.
Select **Text** to create a stamp with characters. Select **Bitmap** to create with a bitmap file. Select **Date/Time/User Name** to display the creation date/time and user name of the printed document.
The setting items in the **Stamp** tab change depending on the selected type.

- For **Text** registration, the characters must already be entered in **Stamp Text**. If necessary, change the **TrueType Font**, **Style**, **Size**, and **Outline** settings. You can select the color of the stamp by clicking **Select Color...**.
- For **Bitmap**, click **Select File...** and select the bitmap file (.bmp) to be used. If necessary, change the settings of the **Size** and **Transparent white area**.
- For **Date/Time/User Name**, the creation date/time and user name of the printed object are displayed in **Stamp Text**. If necessary, change the settings of **TrueType Font**, **Style**, **Size**, and **Outline**. You can select the color of the stamp by clicking **Select Color...**.

When **Stamp Type** is **Text** or **Date/Time/User Name**

Stamp Text

Specifies the stamp text string.
Up to 64 characters can be entered.
For **Date/Time/User Name**, the creation date/time and user name of the printed object are displayed in **Stamp Text**.

TrueType Font

Selects the font for the stamp text string.

Style

Selects the font style for the stamp text string.

Size

Selects the font size for the stamp text string.

Outline

Selects a frame that encloses the stamp text string.
If a large font size is selected for **Size**, characters may extend outside of the stamp border.

Color/Select Color...

Shows the current color for the stamp.
To select a different color, click **Select Color...** to open the **Color** dialog box, and select or create a color you wish to use as a stamp.

When **Stamp Type** is **Bitmap**

File

Specifies the name of the bitmap file to be used as the stamp.

Select File...

Opens the dialog box to open a file.
Click this button to select a bitmap file to be used as a stamp.

Size

Adjusts the size of the bitmap file to be used as a stamp.
Moving the slider to the right increases the size, moving the slider to the left decreases the size.

Transparent white area

Specifies whether to make white-filled areas of the bitmap transparent.
Check this check box to make white-filled areas of the bitmap transparent.

Note

- Click **Defaults** to set **Stamp Type** to text, **Stamp Text** to blank, **TrueType Font** to Arial, **Style** to Regular, **Size** to 36 points, **Outline** unchecked, and **Color** to gray with the RGB values (192, 192, 192).

Placement Tab

The Placement tab allows you to set the position where the stamp is to be printed.

Preview Window

Shows the status of the stamp configured in each tab.

Position

Specifies the stamp position on the page.
Selecting **Custom** from the list allows you to enter values for the **X-Position** and **Y-Position** coordinates directly.
You can also change the stamp position by dragging the stamp in the preview window.

Rotation

Specifies the angle of rotation for the stamp. The angle can be set by entering the number of degrees.
Negative values rotate the stamp clockwise.

Note

- **Rotation** is enabled only when **Text** or **Date/Time/User Name** is selected for **Stamp Type** on the **Stamp** tab.

Note

- Click **Defaults** to set the stamp position to **Center** and the rotation to "0."

Save settings Tab

The **Save settings** tab allows you to register a new stamp or delete an unnecessary stamp.

Title

Enter the title to save the stamp you created.
Up to 64 characters can be entered.

Note

- Spaces, tabs, and returns cannot be entered at the beginning or end of a title.

Stamps

Shows a list of saved stamp titles.
Specify a title to display the corresponding stamp in **Title**.

Save/Save overwrite

Saves the stamp.
Enter a title in **Title**, and then click this button.

Delete

Deletes an unnecessary stamp.
Specify the title of an unnecessary stamp from the **Stamps** list, and click this button.

Background Tab

The Background tab allows you to select a bitmap file (.bmp) to be used as a background or determine how to print the selected background.

Preview Window

Shows the status of the bitmap set on the **Background** tab.

File

Specifies the name of the bitmap file to be used as the background.

Select File...

Opens the dialog box to open a file.
Click this button to select a bitmap file (.bmp) to be used as the background.

Layout Method

Specifies how the background image is to be placed on the paper.
When **Custom** is selected, you can set coordinates for **X-Position** and **Y-Position**.
You can also change the background position by dragging the image in the preview window.

Intensity

Adjusts the intensity of the bitmap to be used as a background.
Moving the slider to the right increases the intensity, and moving the slider to the left decreases the intensity. To print the background at the original bitmap intensity, move the slider to the rightmost position.

Note

- Depending on the environment, this function may not be available.
- Click **Defaults** to set **File** to blank, **Layout Method** to **Fill page**, and the **Intensity** slider to the middle.

Save settings Tab

The **Save settings** tab allows you to register a new background or delete an unnecessary background.

Title

Enter the title to save the background image you specified.
Up to 64 characters can be entered.

Note

- Spaces, tabs, and returns cannot be entered at the beginning or end of a title.

Backgrounds

Shows a list of registered background titles.
Specify a title to display the corresponding background in **Title**.

Save/Save overwrite

Saves the image data as a background.
After inserting the **Title**, click this button.

Delete

Deletes an unnecessary background.

Specify the title of an unnecessary background from the **Backgrounds** list, and then click this button.

Setting the Number of Copies and Printing Order

You can also set the number of copies on the **Basic Settings** tab.

1. Open the printer driver setup window

2. Specify the number of copies to be printed

   For **Copies** on the **Page Setup** tab, specify the number of copies to be printed.

3. Specify the print order

   Check the **Print from Last Page** check box when you want to print from the last page in order, and uncheck the check box when you want to print from the first page.
   Check the **Collate** check box when you are printing multiple copies of a document and want to print out all pages in each copy together. Uncheck this check box when you want to print all pages with the same page number together.

   - **Print from Last Page**: ☑ /**Collate**: ☑

     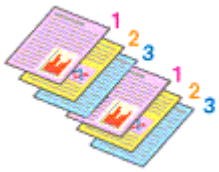

   - **Print from Last Page**: ☐ /**Collate**: ☑

     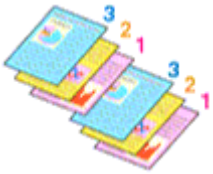

   - **Print from Last Page**: ☑ /**Collate**: ☐

     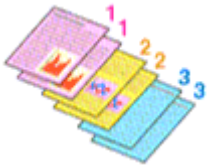

   - **Print from Last Page**: ☐ /**Collate**: ☐

4. Click **OK**

   When you perform print, the specified number of copies will be printed with the specified printing order.

Important

- When the application software that you used to create the document has the same function, specify the settings on the printer driver. However, if the print results are not acceptable, specify the function settings on the application software. When you specify the number of copies and the printing order with both the application software and this printer driver, the number of copies may be multiplied numbers of the two settings or the specified printing order may not be enabled.

Note

- By setting both **Print from Last Page** and **Collate**, you can perform printing so that papers are collated one by one starting from the last page.

Perform Borderless Printing

The borderless printing function allows you to print data without any margin by enlarging the data so that it extends slightly off the paper. In standard printing, margins are created around the document area. However, in borderless printing function, these margins are not created. When you want to print data such as a photo without providing any margin around it, set borderless printing.

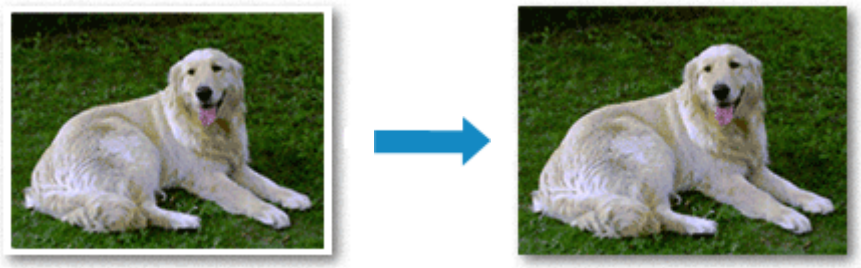

You can also set borderless printing on the **Basic Settings** Tab.

Setting Borderless Printing

1. Open the printer driver setup window

2. Set borderless printing

   Add a checkmark to **Borderless Printing** on the **Page Setup** tab.

   Click **OK** when the confirmation message appears.
   When a message prompting you to change the media type appears, select a media type from the list and click **OK**.

3. Check the paper size

   Check the **Page Size** list. When you want to change it, select another page size from the list. The list displays only sizes that can be used for borderless printing.

4. Adjust the amount of extension from the paper

   If necessary, adjust the amount of extension using the **Amount of Extension** slider.
   Moving the slider to the right increases the amount extending off the paper, and moving the slider to the left decreases the amount.
   It is recommended to set the slider at the second position from the right for most cases.

Important

- When the **Amount of Extension** slider is set to the rightmost position, the back side of the paper may become smudged.

5. Click **OK**

When you perform print, the data is printed without any margins on the paper.

Important

- When a page size that cannot be used for borderless printing is selected, the size is automatically changed to the valid page sizes for borderless printing.
- Depending on the type of the media used during borderless printing, the print quality may deteriorate at the top and bottom of the sheet or stains may form.
- When the ratio of the height to the width differs from the image data, a portion of the image may not be printed depending on the size of the media used.
  In this case, crop the image data with an application software according to the paper size.

Note

- When **Plain Paper** is selected for **Media Type** on the **Media/Quality** tab, borderless printing is not recommended. Therefore, the message for media selection appears.
  When you are using plain paper for test printing, select **Plain Paper**, and click **OK**.

Expanding the Range of the Document to Print

Setting a large amount of extension allows you to perform borderless printing with no problems. However, the portion of the document extending off the paper range will not be printed and for this reason, the subjects around the perimeter of a photo may not be printed.

When you are not satisfied with the result of borderless printing, reduce the amount of extension. The extension amount decreases as the **Amount of Extension** slider is moved to the left.

Important

- When the amount of extension is decreased, an unexpected margin may be produced on the print, depending on the size of the paper.

Note

- When the **Amount of Extension** slider is set to the leftmost position, image data will be printed in the full size. If you set this when printing the address side of a postcard, the postal code of the sender is printed in the correct position.
- When **Preview before printing** is checked on the **Media/Quality** tab, you can confirm whether there will be no margin before printing.

Page Layout Printing

The page layout printing function allows you to print more than one page image on a single sheet of paper.

1. Open the printer driver setup window

2. Set page layout printing

   Select a page layout number from **1 on 1** to **16 on 1** from the **Page Layout** list on the **Page Setup** tab.
   The current settings are displayed in the settings preview on the left side of the printer driver.

3. Select the print paper size

   Select the size of the paper loaded in the printer from the **Printer Paper Size** list.

4. Set the number of pages to be printed on one sheet and the page order

   If necessary, click **Preferences...**, specify the following settings in the **Page Layout Printing** dialog box, and click **OK**.

   Page Order
   To change the page arrangement order, select a placement method from the list.

   Page Border
   To print a page border around each document page, check this check box.

5. Complete the setup

   Click **OK** on the **Page Setup** tab.
   When you perform print, the specified number of pages will be arranged on each sheet of paper in the specified order.

Duplex Printing

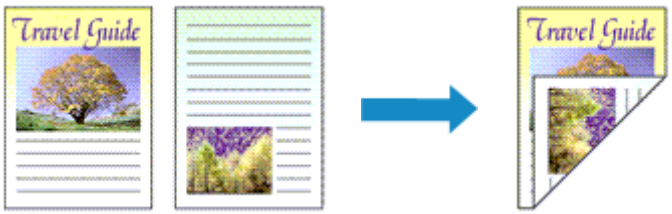

You can also set duplex printing in the **Media/Quality** tab.

1. Open the printer driver setup window

2. Set duplex printing

   Select **2-sided Printing (Manual)** from **1-sided/2-sided/Booklet Printing** on the **Page Setup** tab.

3. Select the layout

   Select the layout you want to use from the **Page Layout** list.

4. Specify the side to be stapled

   The best **Binding Location** is selected automatically from the **Orientation** and **Page Layout** settings.
   To change the setting, select another stapling side from the **Binding Location** list.

5. Set the margin width

   If necessary, click **Specify Margin...** and set the margin width, and then click **OK**.

6. Complete the setup

   Click **OK** on the **Page Setup** tab.
   When you perform print, the document is first printed on one side of a sheet of paper. After one side is printed, reload the paper correctly according to the message.
   Press the **OK** button on the printer to print the opposite side.

Note

- If the back side of the paper becomes smudged during duplex printing, perform **Bottom Plate Cleaning** in the Canon IJ Printer Assistant Tool.

Overview of the Printer Driver

- **Canon IJ Printer Driver**
  - Opening Printer Driver's Setup Screen
- **Canon IJ Status Monitor**
- **Instructions for Use (Printer Driver)**

Canon IJ Printer Driver

The Canon IJ printer driver (simply called printer driver below) is software that you install onto your computer so that it can communicate with the printer.

The printer driver converts the print data created by your application software into data that your printer can understand, and sends the converted data to the printer.

Because different models support different print data formats, you need a printer driver for the specific model you are using.

Installing the Printer Driver

To install the printer driver, install the driver from the Setup CD-ROM or our website.

Specifying the Printer Driver

To specify the printer driver, open the **Print** dialog box of the application software you are using, and select "Canon XXX" (where "XXX" is your model name).

Displaying the Manual from the Printer Driver

To display the description of a setup tab from the printer driver's setup screen, click **Help** on that tab.

Related Topic

➡ Opening Printer Driver's Setup Screen

Opening Printer Driver's Setup Screen

You can display the printer driver's setup screen from your application software or by clicking the printer icon.

Displaying the Printer Driver's Setup Screen from Your Application Software

Perform this procedure to set up the print settings during printing.

1. Select print command from application software

   The **Print** command can generally be found in the **File** menu.

2. Select your printer model, and click **Preferences** (or **Properties**)

   The printer driver's setup screen appears.

Note

- Depending on the application software you are using, the command and menu names, and the number of steps may vary. For details, refer to the operating instructions of your application software.

Displaying the Printer Driver's Setup Screen by Clicking the Printer Icon

From the setup screen you can perform printer maintenance operations such as print head cleaning, or set print settings to be shared by all application software.

1. Select **Control Panel** -> **Hardware and Sound** -> **Devices and Printers**

2. Right-click the icon of your model. When the menu appears, select **Printing preferences**

   The printer driver's setup screen appears.

Important

- Opening the printer driver setup window through **Printer properties** displays such tabs regarding the Windows functions as the **Ports** (or **Advanced**) tab. Those tabs do not appear when opening through **Printing preferences** or application software. For tabs regarding Windows functions, refer to the user's manual for the Windows.

Canon IJ Status Monitor

The Canon IJ Status Monitor displays the printer status and the printing progress. The printer status is shown by the icons and messages in the status monitor.

Launching the Canon IJ Status Monitor

The Canon IJ Status Monitor launches automatically when print data is sent to the printer. When launched, the Canon IJ Status Monitor appears as a button on the task bar.

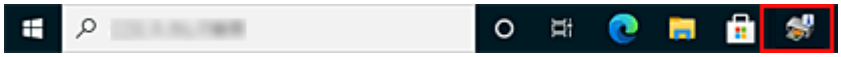

Click the button of the status monitor displayed on the task bar. The Canon IJ Status Monitor appears.

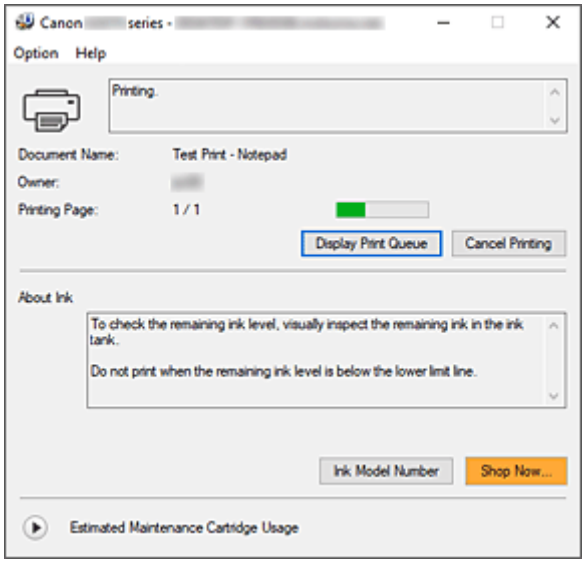

Note

- To open the Canon IJ Status Monitor when the printer is not printing, open the printer driver setup window and click **View Printer Status** on the **Maintenance** tab.
- The information displayed on the Canon IJ Status Monitor may differ depending on the country or region where you are using your printer.

When Errors Occur

The Canon IJ Status Monitor is automatically displayed if an error occurs (e.g., if the printer runs out of paper or if the ink is low).

In such cases, take the appropriate action as described.

Related Topic

➡ Canon IJ Status Monitor Description

Instructions for Use (Printer Driver)

This printer driver is subject to the following restrictions. Keep the following points in mind when using the printer driver.

Restrictions on the Printer Driver

- With some applications, the **Copies** setting in the **Page Setup** tab of the printer driver may not be enabled.
  In this case, use the copies setting in the **Print** dialog box of the application software.
- If the selected **Language** in the **About** dialog box of the **Maintenance** tab does not match the operating system interface language, the printer driver setup window may not be displayed properly.
- Do not change the **Advanced** tab items of the printer properties. If you change any of the items, you will not be able to use the following functions correctly.
  Also, if **Print to file** is selected in the **Print** dialog box of the application software and with applications that prohibit EMF spooling, the following functions will not operate.
  - **Preview before printing** on the **Media/Quality** tab
  - **Prevention of Print Data Loss** in the **Print Options** dialog box on the **Page Setup** tab
  - **Booklet Printing** in **1-sided/2-sided/Booklet Printing** on the **Page Setup** tab
  - **Print from Last Page**, **Collate**, **Specify Margin...**, and **Stamp/Background...** on the **Page Setup** tab
- Since the resolution in the preview display differs from the printing resolution, text and lines in the preview display may appear different from the actual print result.
- With some applications, the printing is divided into multiple print jobs.
  To cancel printing, delete all divided print jobs.
- If image data is not printed correctly, display the **Print Options** dialog box from the **Page Setup** tab and change the setting of **Disable ICM required from the application software**. This may solve the problem.
- If you are using a model that has a card slot, the card slot of the printer may become inaccessible. In such cases, restart the printer or turn it off and reconnect the USB cable.

Points to Note About Applications with Restrictions

- There are following restrictions in Microsoft Word (Microsoft Corporation).
  - When Microsoft Word has the same printing functions as the printer driver, use Word to specify them.
  - When a setting from **2 on 1** to **16 on 1** or **Zoom** is used for **Page Layout** on the **Page Setup** tab of the printer driver, the document may not print normally in certain versions of Word.
  - When **Page Size** in Word is set to "XXX Enlarge/Reduce," the document may not print normally in certain versions of Word.
    If this happens, follow the procedure below.
    1. Open Word's **Print** dialog box.
    2. Open the printer driver setup window, and on the **Page Setup** tab, set **Page Size** to the same paper size that you specified in Word.
    3. Set **Booklet Printing** in **Page Layout** or **1-sided/2-sided/Booklet Printing** according to your requirements.

4. Click OK to close the window.
5. Without starting printing, close the **Print** dialog box.
6. Open Word's **Print** dialog box again.
7. Open the printer driver setup window and click **OK**.
8. Start printing.

- If bitmap printing is enabled in Adobe Illustrator (Adobe Incorporated), printing may take time or some data may not be printed. Print after unchecking the **Bitmap Printing** check box in the **Print** dialog box.

Maintenance Tab Description

The **Maintenance** tab allows you to start the Canon IJ Printer Assistant Tool or check the status of the printer.

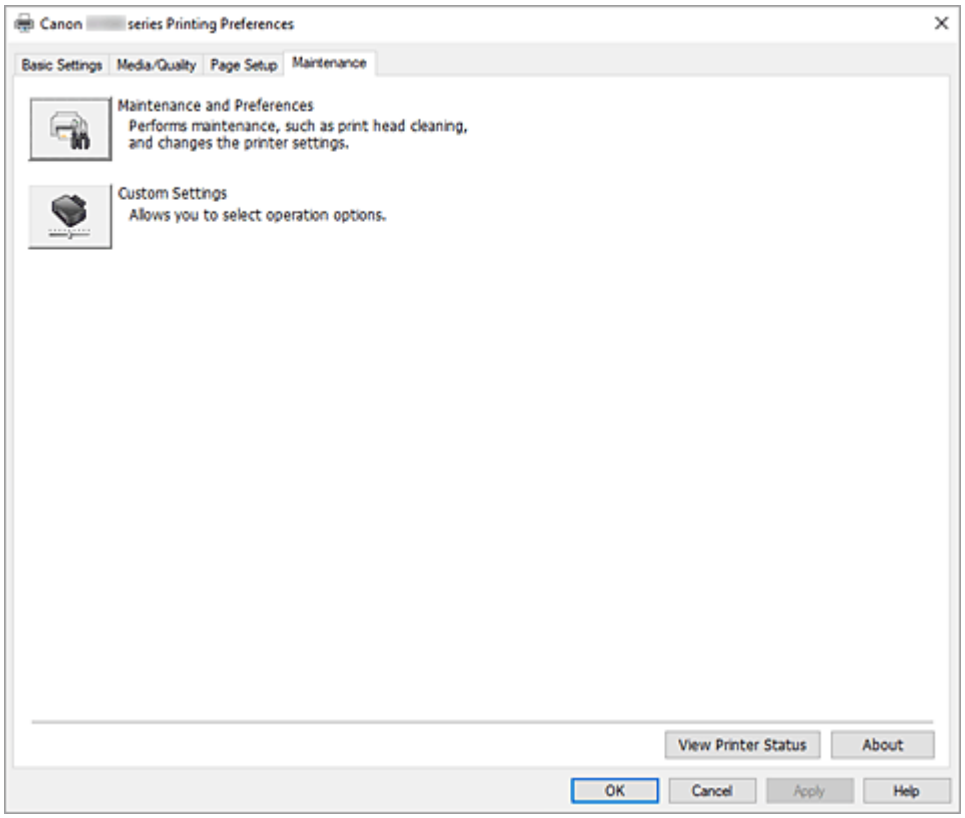

Maintenance and Preferences

Canon IJ Printer Assistant Tool is started.

You can perform printer maintenance or change the settings of the printer.

Custom Settings

Opens the **Custom Settings** dialog box.

Perform this function to change the settings of this printer.

Note

- If the printer is off or if communication between the printer and the computer is disabled, an error message may appear because the computer cannot collect the printer status.
  If this happens, click **OK** to display the most recent settings specified on your computer.

View Printer Status

Starts the Canon IJ Status Monitor.

Perform this function when you want to check the printer status and how a print job is proceeding.

About

Opens the **About** dialog box.
The version of the printer driver, plus a copyright notice, can be checked.
In addition, the language to be used can be switched.

Custom Settings dialog box

When you click **Custom Settings**, the **Custom Settings** dialog box is displayed.
If necessary, switch between various modes of printer operation.

Rotate 90 degrees left when orientation is [Landscape]

On the **Page Setup** tab, you can change the rotation direction of the **Landscape** in the **Orientation**.
To rotate the print data 90 degrees to the left during printing, check this check box.

Important

- Do not change this setting while the print job is displayed in the print wait list. Otherwise, characters may be omitted or the layout may become corrupt.

Note

- If **Envelope Com 10**, **Envelope DL**, **Yougata 4 4.13"x9.25"**, **Yougata 6 3.86"x7.48"**, **Envelope C5**, or **Envelope Monarch 3.88"x7.5" 98.4x190.5mm** is selected for **Page Size** on the **Page Setup** tab, the printer rotates the paper 90 degrees to the left to print, regardless of the **Rotate 90 degrees left when orientation is [Landscape]** setting.

Do not detect mismatched paper settings when printing from a computer

When you print documents from your computer, the paper loaded in the printer and the paper size setting on the printer driver do not match, this setting disables the message display and allows you to continue printing.
To enable detection of paper setting mismatches, uncheck this check box.

About dialog box

When you click **About**, the **About** dialog box is displayed.
This dialog box displays the version, copyright, and module list of the printer driver. You can select the language to be used and switch the language displayed in the setup window.

Modules

Lists the printer driver modules.

Language

Specifies the language you wish to use in the printer driver setup window.

Important

- If the font for displaying the language of your choice is not installed in your system, the characters will be garbled.

Allow Google Analytics to send information

To stop sending information, uncheck this check box.

The check box appears only if a user with administrator privileges is logged on. If information is not provided, the check box will not appear.

Canon IJ Status Monitor Description

The Canon IJ Status Monitor displays the printer status and the printing progress. The printer status is shown by the icons and messages in the status monitor.

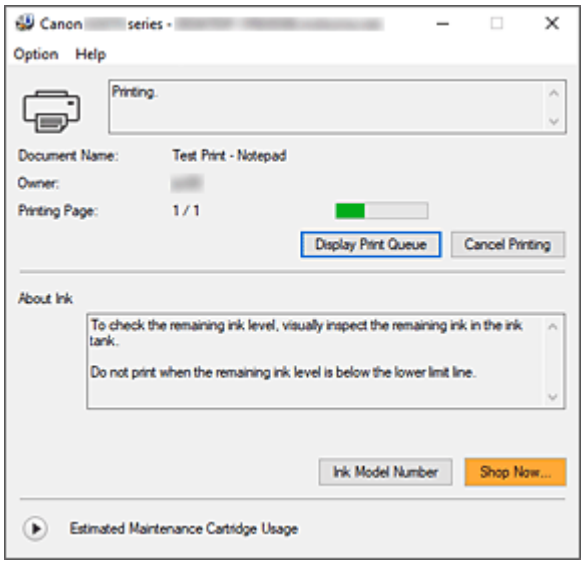

Features of the Canon IJ Status Monitor

The Canon IJ Status Monitor has the following functions:

Onscreen display of printer status

The status monitor displays the printer status in real-time.
You can check the progress of each document to be printed (print job).

Display of error content and correction procedure

The status monitor displays information on any errors that occur on the printer.
You can then immediately check what sort of action to perform.

Overview of the Canon IJ Status Monitor

The Canon IJ Status Monitor displays icons and messages related to printer status and ink.
During printing, you can check information about the document being printed and the print progress.
If an error occurs, the status monitor displays the error content and instructions on how to correct the error. Follow the message instructions.

Printer

Canon IJ Status Monitor shows an icon when a warning or error occurs to the printer.

: There is a warning.

: There has been an operator error.

: There is a notice about something other than a warning or an error.

: There has been an error which requires a service.

Document Name

Name of the document being printed.

Owner

Owner's name of the document being printed.

Printing Page

Page number of current page and the total page count.

Display Print Queue

The print queue, which controls the current document and documents waiting to be printed.

Cancel Printing

Cancels printing.

About Ink

Displays messages about ink.

Ink Model Number

You can look up the correct ink model number for your printer.

Estimated Maintenance Cartridge Usage

Displays icons to report that the available space in the maintenance cartridge is low or the cartridge is full.

Click (the disclosure triangle) to display a pictorial representation of the estimated usage amount in the maintenance cartridge.

Option Menu

If a printer message appears, select **Enable Status Monitor** to start the Canon IJ Status Monitor.

Select **Enable Status Monitor** to use the following commands:

Always Display Current Job

Displays the Canon IJ Status Monitor whenever a document is being printed.

Always Display on Top

Displays the Canon IJ Status Monitor in front of other windows.

Display Guide Message

Displays guide messages for complicated paper setting operations.

Envelope Printing

Displays a guide message when envelope printing starts.

To hide this guide message, select the **Do not show this message again** check box.

To display the guide message again, open the **Option** menu, select **Display Guide Message**, click **Envelope Printing**, and enable this setting.

Display Warning Automatically

When a Maintenance Cartridge Warning Occurs

When a maintenance cartridge remaining space warning occurs, the Canon IJ status monitor starts automatically and appears in front of all other windows.

Start when Windows is Started

Automatically starts the Canon IJ Status Monitor when Windows is started.

Help Menu

Select this menu to display Help information for the Canon IJ Status Monitor including version and copyright information.

Related Topic

➡ Canon IJ Status Monitor

Updating the Driver

Drivers include a printer driver and MP Drivers. The MP Drivers include a printer driver, ScanGear (scanner driver), and fax driver.
By updating the Driver to the latest version of the Driver, unresolved problems may be solved.

Important

- Check the following if you want to install or delete drivers.
  - Log on as a user who has the administrator account.
  - Terminate all running applications.

- Installing the Driver
- Deleting the Unnecessary Driver

Installing the Driver

1. Turn on the printer

2. Start the installer

   Double-click the icon of the downloaded file.
   The installation program starts.

3. Install the driver

   Take the appropriate action as described on the screen.

4. Complete the installation

   Click **Exit**.

   Depending on the environment you are using, a message prompting you to restart the computer may be displayed. To complete the installation properly, restart the computer.

Important

- You can download the driver for free, but any Internet access charges incurred are your responsibility.

Deleting the Unnecessary Driver

The printer driver which you no longer use can be deleted.

1. Start the uninstaller

   Select **Control Panel** -> **Programs** -> **Programs and Features**.
   From the program list, select "Canon XXX Printer Driver" (where "XXX" is your model name) and then click Uninstall.

   The confirmation window for uninstalling the model appears.

2. Perform the uninstaller

Click **Start**. When the confirmation message appears, click **Yes**.
When all the files have been deleted, click **Complete**.

The deletion of the Driver is complete.

Printing from Application Software (macOS)

- Printing Basic
- Printing on Postcards
- How to Open Printer Settings Screen
- Displaying the Printing Status Screen
- Deleting the Undesired Print Job
- Removing Printer That Is No Longer Required from List of Printers

Printing

With this printer, you can start printing right away after connecting it to your Mac without installing any special software.

Checking Your Environment

First, check your environment.

- Operating environment
  Mac running the latest version of OS
- Requirement
  USB connection between your Mac and the printer

Print from a Mac

1. Check that printer is turned on

   Note

   - If **Auto power on** is enabled, printer automatically turns itself on when receiving a print job.

2. Load paper in printer

   Register the set paper size in **Paper Select** button on the printer.
   The paper type will be set automatically according to the set paper size.

3. Start printing from your application software

   The Print dialog opens.

4. Select printer

   Select your model from the **Printer** list in the Print dialog.

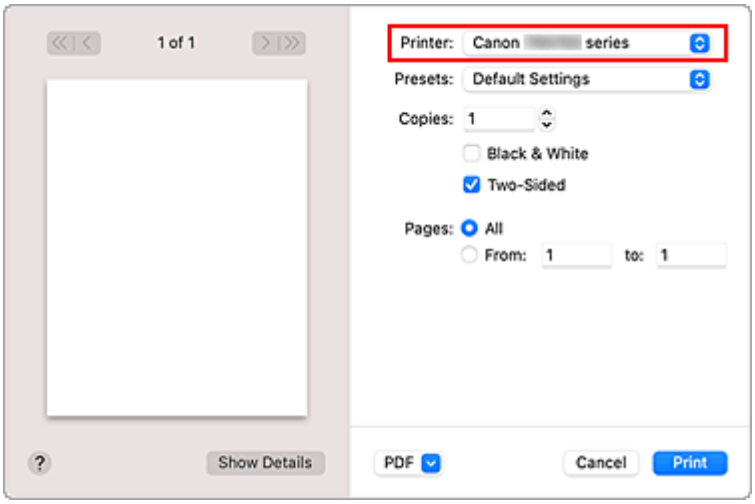

Note

- Click **Show Details** to switch the setup window to the detailed display.

5. Check print settings

Set items such as **Paper Size** to the appropriate size, as well as **Media Type** from **Media & Quality** of the pop-up menu.

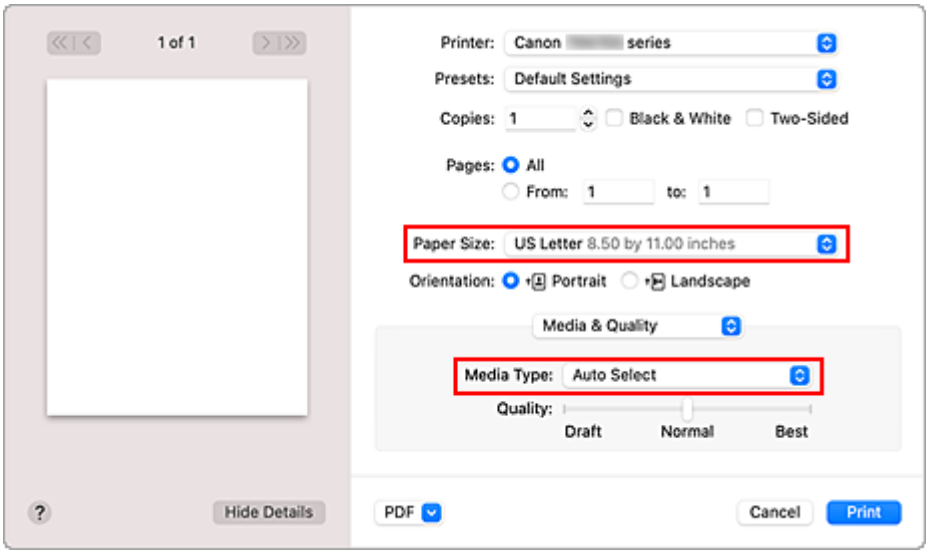

Important

- An error may occur if the paper size set in the print dialog is different from the paper size configured on the printer. Select the correct items on the print dialog and the printer that correspond to the paper being printed.

Note

- Use the Print dialog to set general print settings such as the layout and the print sequence. For information about print settings, refer to macOS help.

6. Click **Print**

The printer prints according to the specified settings.

Important

- If you are performing large-format printing, make sure that there is plenty of remaining ink.
- If you set a custom paper size in **Paper Size** and set it to a length longer than the specified length, the data will be printed with the "Media Type: Plain Paper, Print Quality: Standard" setting.

Note

- The display of the settings screen may differ depending on the application software you are using.

Printing of Envelopes

For printing on the envelope from Mac, refer to the following.

Print result image	Orientation of print data	Orientation of loading envelope
	 The print data is rotated by 180 degrees against the print result image.	 Load the envelope in vertically with the address side facing up so that the folded flap of the envelope will be faced down on the right side.

Printing on Postcards

This section describes the procedure for printing on postcards.

1. Load postcards in printer

2. Select paper size from printer

   Set * with the **Paper Select** button on the printer.

3. Select **Paper Size** and **Media Type** from the print dialog

   Select **Postcard** or **Postcard Borderless** for **Paper Size** from the print dialog. When you print on the address side, select **Postcard**.
   Select the Hagaki you want to use for **Media Type** from the print dialog.

   Important

   - This printer cannot print on postcards that have photos or stickers attached.
   - You will get cleaner printing if you print the message side first and then print the address side.

4. Click **Print**

   The printer prints according to the specified settings.

How to Open Printer Settings Screen

The settings screen of the printer can be displayed from your application software.

Opening the Page Setup Dialog

Use this procedure to set the page (paper) settings before printing.

1. Select **Page Setup...** from the **File** menu of the application software

   The Page Setup dialog opens.

Opening the Print Dialog

Use this procedure to set the print settings before printing.

1. Select **Print...** from the **File** menu of the application software

   The Print dialog opens.

Displaying the Printing Status Screen

Check the print progress according to the following procedure:

1. Launch the printing status screen

- If the print data has been sent to the printer
  The printing status screen opens automatically. To display the printing status screen, click the printer icon displayed on the Dock.
- If the print data has not been sent to the printer
  Open **System Preferences**, and select **Printers & Scanners**.
  To display the printing status screen, select your printer model from the printer list, and then click **Open Print Queue...**.

2. Check the printing status

You can check the name of the file being printed or ready for being printed.

Deletes the specified print job.

Stops printing the specified document.

Resumes printing the specified document.

Stops printing all documents.

Displayed only when printing of all documents is being stopped, and resumes printing all documents.

Important

- If an error occurs, an error message will appear on the printing progress confirmation screen.
- The content of the error message may differ depending on the OS version.
- The printer part names in the error message may differ from what is listed in this manual.
- If the content of the error message is difficult to understand, check how many times the error indicator on the printer flashes, and check the corresponding support number.
  For details on the number of times the error indicator flashes and the support numbers, see "When Error Occurred."

Deleting the Undesired Print Job

If the printer does not start printing, canceled or failed print job data may be remaining.
Delete unnecessary print jobs from the print status check screen.

1. Open **System Preferences**, and select **Printers & Scanners**

2. Select your model, and then click **Open Print Queue...**

   The print status check screen appears.

3. Select the unnecessary print job and click (Delete)

   The selected print jobs will be deleted.

Removing Printer That Is No Longer Required from List of Printers

The printer that is no longer in use can be removed from the list of printers.
Before removing the printer, remove the cable connecting the printer and PC.

You cannot remove the printer if you are not logged on as the administrator. For information about an administrative user, see **Users & Groups** from **System Preferences**.

1. Open **System Preferences**, and select **Printers & Scanners**

2. Delete printer from list of printers

   Select the printer you wish to remove from the list of printers and click **-**.

   Click **Delete Printer** when the confirmation message appears.

Printing Using Canon Application Software

- **Easy-PhotoPrint Editor Guide**

Paper Settings

By registering the paper size, you can prevent the printer from misprinting by flashing the **Alarm** lamp before printing starts when the paper size of the loaded paper differs from the print settings.

When you load paper on the rear tray

The **Paper** lamp flashes.

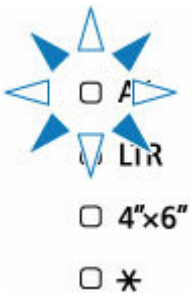

Register the paper size according to the loaded paper.

Media type is set depending on the paper size.

Paper size	Media type
A4, LTR	Plain paper
4"x6"	Photo paper
✱ (Optional)	Optional

Note

- The ✱ setting is registered so that it can be used for all paper size and types by default.

When the paper size setting for printing is different from the paper size setting set to the printer

Ex:

- Paper size setting for printing: A5
- Paper size setting set to the printer: A4

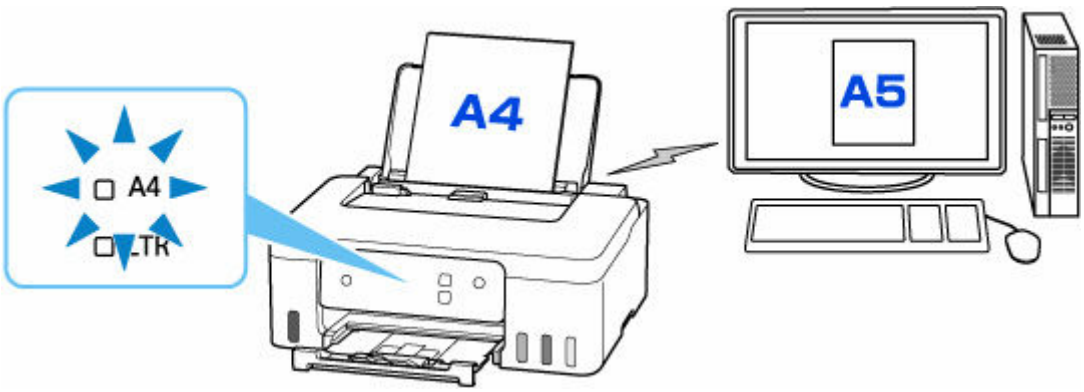

When you start printing, the **Alarm** lamp and the **Paper** lamp for the paper size set when printing will flash.

Select one of the operations below.

Print on set paper

You print on the paper loaded without changing the paper size setting. Press the **OK** button.

For example, when the paper size setting for printing is A5 and the paper size setting set to A4 on the printer, the printer starts printing with A5 on the paper loaded.

Printing after replacing paper

You print after replacing paper loaded on the rear tray.

For example, when the paper size setting for printing is A5 and the paper size setting set to A4 on the printer, you load A5 sized paper before you start printing.

Cancel printing

Press the **Stop** button to cancel printing and change the paper size setting specified for printing. Try printing again.

Frequently Asked Questions

Top 6

- Loading Paper >
- When Error Occurred >
- Ink Does Not Come Out >
- Cannot Proceed Beyond Printer Connection Screen (Cannot Find Printer Connected via USB) >
- What to Do When Paper Is Jammed >
- Printer Does Not Print >

Search by Category

Error

- List of Support Codes for Printer Errors
- When Error Occurred
- Message Is Displayed

Printing

- What to Do When Paper Is Jammed
- Printer Does Not Print
- Printout (Copy) Results Are Unsatisfactory
- Blurry or Fuzzy
- Inaccurate or Bleeding Colors
- Lines Are Misaligned/Distorted

Other

- Failed to MP Drivers (Printer Driver) Installation (Windows)
- Replace Ink in Print Head
- Refilling Ink Tanks
- Repairing Your Printer
- Cannot Proceed Beyond Printer Connection Screen (Cannot Find Printer Connected via USB)
- USB Connection Problems

Questions not Listed Above

Error

- Cannot Use Previous Applications

Printing

- Cannot Print from macOS
- Printing (Copying) Stops
- Printer Does Not Pick Up or Feed the Paper/"No Paper" Error

Other

- Printer Turns Off Unexpectedly or Repeatedly

Operation Problems

Printing Problems

- Printer Does Not Print
- Printer Does Not Pick Up or Feed the Paper/"No Paper" Error
- Printout (Copy) Results Are Unsatisfactory
- Change to Offline (Windows)

Q

Printer Does Not Print

A

Check1 Make sure printer is turned on.

If not, make sure the printer is securely plugged in and press **ON** button to turn on.

The **ON** lamp flashes while the printer is initializing. Wait until the **ON** lamp stops flashing and remains lit.

Note

- If you are printing large data such as photos or other graphics, printing may take longer to start. The **ON** lamp flashes while the computer is processing data and sending it to the printer. Wait until printing starts.

Check2 Make sure printer is properly connected to computer.

If you are using a USB cable, make sure it is securely connected to both the printer and the computer. When the USB cable is securely plugged in, check the following:

- If you are using a relay device such as a USB hub, disconnect it, connect the printer directly to the computer, and retry the printing. If printing starts normally, there is a problem with the relay device. Contact the vendor of the relay device.
- There could also be a problem with the USB cable. Replace the USB cable and retry the printing.

Check3 Check to see the **Alarm** lamp is lit or Flashing.

If the **Alarm** lamp is lit or Flashing, follow the instruction on the computer and resolve the error.

➡ Loading Paper

➡ Refilling Ink Tanks

If the **Alarm** lamp still does not go off, check the following item.

➡ When Error Occurred

Check4 Make sure paper settings match information set for rear tray.

If the paper settings do not match the information set for the rear tray, an error message appears on the computer. Follow the instructions on the computer to solve the problem.

Note

- You can select whether the message which prevents misprinting is displayed.
  - To change the message view setting when printing using the printer driver:

    ➡ Changing the Printer Operation Mode (Windows)
    ➡ Changing the Printer Operation Mode (macOS)

Check5 If printing from a computer, delete unnecessary print jobs.

- **For Windows:**

  ➡ Deleting the Undesired Print Job

- **For macOS:**

  ➡ Deleting the Undesired Print Job

Check6 Is your printer's printer driver selected when printing?

The printer will not print properly if you are using a printer driver for a different printer.

- **For Windows:**

  Make sure "Canon XXX series" (where "XXX" is your printer's name) is selected in the Print dialog box.

  Note

  - If multiple printers are registered to your computer, set your printer as default printer to make the one selected by default.

    ➡ Default Printer Keeps Changing (Windows)

- **For macOS:**

  Make sure your printer's name is selected in **Printer** in the Print dialog.

  Note

  - If multiple printers are registered to your computer, select **Set as Default Printer** from **System Preferences** > **Printers & Scanners** for a printer to make the one selected by default.

Check7 Are you trying to print a large data file? (Windows)

If you are trying to print a large data file, it takes a long time to start printing.

If the printer does not start printing after a certain period of time, select **On** for **Prevention of Print Data Loss** on the **Print Options** dialog box.

For details, refer to Page Setup Tab Description.

Important

- Selecting **On** for **Prevention of Print Data Loss** may reduce print quality.
- After printing is completed, select **Off** for **Prevention of Print Data Loss**.

Check8 If printing from your computer, restart the computer.

Restart the computer and try printing again.

Important

- For Windows:

  To restart your computer, choose **Restart** instead of **Shut down**.

Q

Printer Does Not Pick Up or Feed the Paper/"No Paper" Error

A

Check1 Make sure paper is loaded in the rear tray.

➡ Loading Paper

Check2 When loading paper, consider the following.

- When loading two or more sheets of paper, align the edges of the sheets before loading the paper.
- When loading two or more sheets of paper, make sure the paper stack does not exceed the paper load limit.

  However, paper may not feed correctly at the maximum capacity, depending on the type of paper or environmental conditions (very high or low temperature and humidity). In such cases, reduce the amount of paper you load at a time to less than half of the paper load limit.
- Always load the paper in portrait orientation, regardless of the printing orientation.
- When you load the paper on the rear tray, place the print side facing UP and align the right and left paper guides with the paper stack.

  ➡ Loading Paper

Check3 Is paper too thick or curled?

➡ Unsupported Media Types

Check4 When loading envelopes, consider the following.

When printing on envelopes, see Loading Envelopes, and prepare the envelopes before printing.

Once you have prepared the envelopes, load them in portrait orientation. If the envelopes are placed in landscape orientation, they will not feed properly.

Check5 Make sure media type and paper size settings match with loaded paper.

Check6 Make sure that there are not any foreign objects in the rear tray.

If the paper tears in the rear tray, see What to Do When Paper Is Jammed to remove it.

If a foreign object is inside the rear tray, remove it according to the following procedure.

1. Turn off the power of the printer and disconnect the power plug from the outlet.

2. Fold one A4 sheet in half and insert it horizontally into the rear tray.

   Insert the paper so that your hand does not directly touch the part in the center of the rear tray when removing the foreign object.

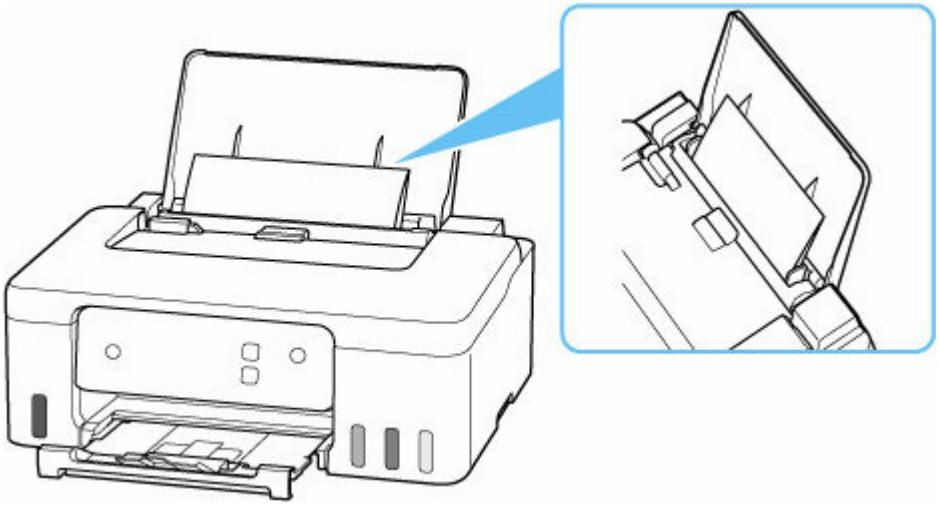

3. Remove foreign object by hand with paper inserted.

   Put your hand between the paper you inserted and the rear tray to remove the foreign object.

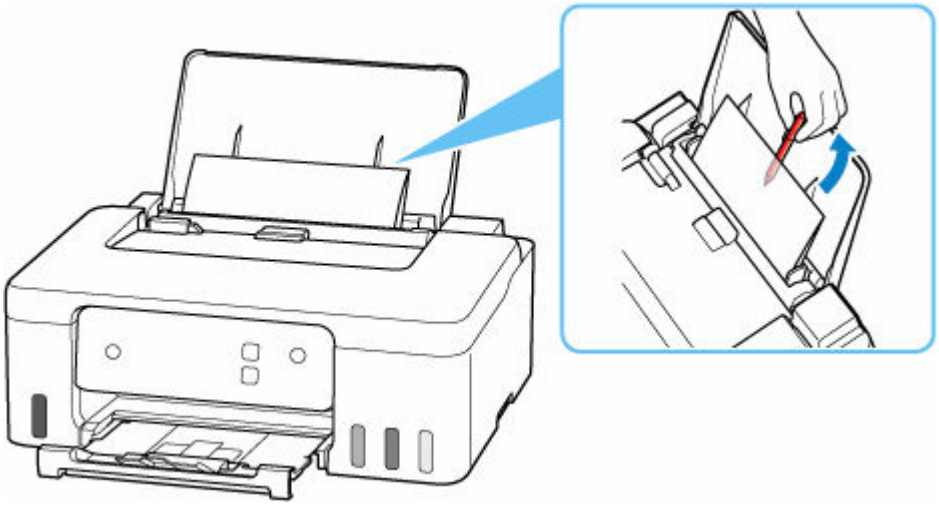

4. Remove the folded paper inserted in step 2.

Important

- Do not tilt the printer or do not it upside down. Doing so may cause the ink to leak.

Check7 Clean Paper Feed Roller.

➡ Cleaning Paper Feed Rollers

Note

- Cleaning the paper feed roller abrades it, so do this only when necessary.

If the measures above do not solve the problem, contact your nearest Canon service center to request a repair.

Important

- Do not tilt the printer when moving it since the ink may leak out.
- When transporting the printer for repairing it, see Repairing Your Printer.

Printout (Copy) Results Are Unsatisfactory

If the print results are unsatisfactory due to white streaks, misaligned/distorted lines, or uneven colors, check the paper and print quality settings first.

Check1 Do page size and media type settings match size and type of loaded paper?

If these settings do not match, it is not possible to obtain the proper result.

If you are printing a photograph or an illustration, an incorrect paper type setting may reduce the quality of the printout color.

Also, if you print with an incorrect paper type setting, the printed surface may be scratched.

In borderless printing, uneven coloring may occur depending on the combination of the paper type setting and the loaded paper.

The method for checking the paper and print quality settings differs depending on what you are using your printer for.

- **Printing from your computer**

  Check the settings using the printer driver.

  ➡ Basic Printing Setup

Check2 Make sure appropriate print quality is selected (see list above).

Select a print quality suited to the paper and to what you are printing. If you notice blurs or uneven colors, increase the print quality setting and retry the printing.

Check3 If problem is not resolved, click on illustration that corresponds to problem.

Ink Does Not Come Out

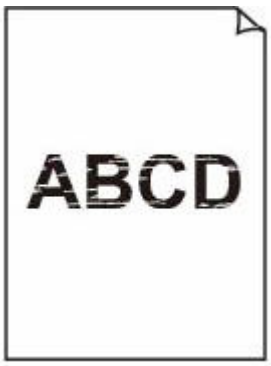

Blurry or Fuzzy

Inaccurate or Bleeding Colors

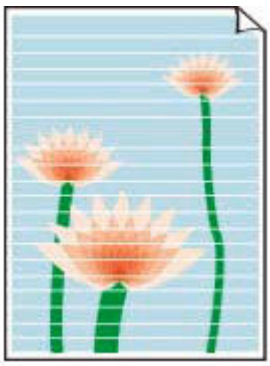

Streaks

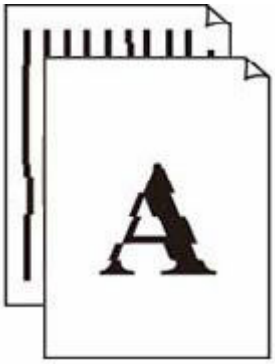

Lines Are Misaligned/Distorted

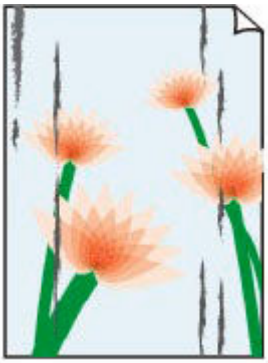

Paper Is Smudged/ Printed Surface Is Scratched

Ink Blots/Paper Curl

Vertical Line Next to Image

Images Incomplete/ Cannot Complete Printing

	Tokyo	London
Jan.	12,000	10,500
Feb.	11,500	10,800
Mar.	13,800	12,800
Apr.	12,000	10,500
May.	11,500	10,800
June	13,800	12,800

Lines Incomplete or Missing (Windows)

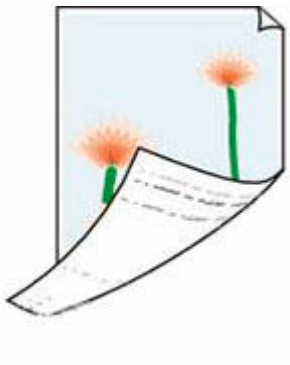

Back of Paper Is Smudged

Uneven Colors

Streaked Colors

Note

- Depending on the specifications of the printer you are using, some of the features described (scanner/ copy, etc.) may not apply.

  For details about the functions of your printer, see Specifications.

Q

Ink Does Not Come Out/Blurry or Fuzzy/Inaccurate or Bleeding Colors/Streaks

Ink Does Not Come Out

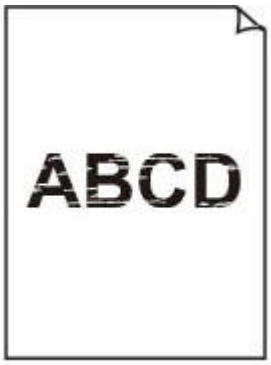

Blurry or Fuzzy

Inaccurate or Bleeding Colors

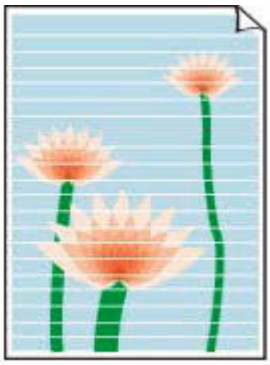

Streaks

A

Note

- If printouts are blank, black does not print, is faint, or has a blue or red tint, refer to this web page.

Check1 Check paper and print quality settings.

➡ Printout (Copy) Results Are Unsatisfactory

Check2 Are the print head nozzles clogged?

Print the nozzle check pattern to determine whether the ink ejects properly from the print head nozzles.

Step1 Print the nozzle check pattern.

After printing the nozzle check pattern, examine the pattern.

- From the printer
  - ➡ Printing the Nozzle Check Pattern
- From the computer
  - **For Windows:**
    - ➡ Printing a Nozzle Check Pattern
  - **For macOS:**
    - ➡ Printing a Nozzle Check Pattern

If the pattern is not printed correctly, go to the next step.

Step2 Clean the print head.

After cleaning the print head, print the nozzle check pattern and check the result.

- From the printer

➡ Cleaning the Print Head

- From the computer
  - **For Windows:**
    ➡ Clean the print head
  - **For macOS:**
    ➡ Clean the print head

If it still does not improve, go to the next step.

Step3 Clean the print head again.

After cleaning the print head again, print the nozzle check pattern and check the result.

If it still does not improve, go to the next step.

Step4 Clean the print head deeply.

After cleaning the print head deeply, print the nozzle check pattern and check the result.

- From the computer
  - **For Windows:**
    ➡ Clean the print head deeply
  - **For macOS:**
    ➡ Clean the print head deeply

If it does not improve, turn off the printer, wait for more than 24 hours without unplugging the power supply, and go to the next step.

Step5 Clean the print head deeply again.

After cleaning the print head deeply again, print the nozzle check pattern and check the result.

For details on printing the nozzle check pattern, print head cleaning, and print head deep cleaning, see If Printing Is Faint or Uneven.

Check3 When using paper with one printable surface, check the correct printable side of the paper.

Printing on the wrong side of such paper may cause unclear prints or prints with reduced quality.

When you load paper on the rear tray, load paper with the printable side facing up.

Refer to the instruction manual supplied with the paper for detailed information on the printable side.

Check4 If the ink still does not come out.

➡ Replace Ink in Print Head

Note

- Although some air may enter the ink tube, it is not a malfunction. No problem if the nozzle check pattern is printed correctly.

Q

Lines Are Misaligned/Distorted

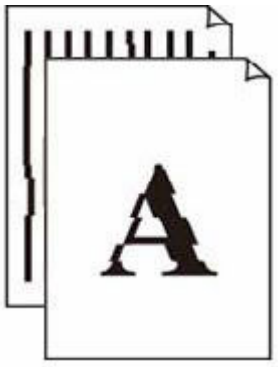

A

Note

- For the case of misaligned or distortion, refer to this web page.

Check1 Check paper and print quality settings.

➡ Printout (Copy) Results Are Unsatisfactory

Check2 Perform print head alignment.

If printed lines are misaligned/distorted or print results are otherwise unsatisfactory, adjust the print head position.

➡ Adjusting Print Head Position

Check3 Increase print quality and try printing again.

Increasing the print quality from computer may improve the print result.

Q

Paper Is Smudged/Printed Surface Is Scratched/Ink Blots/Paper Curl

---

A

Check1 Check paper and print quality settings.

➡ Printout (Copy) Results Are Unsatisfactory

Check2 Check paper type.

Make sure you are using the right paper for what you are printing. To print data with high color saturation such as photographs or images with dark colors, we recommend that you use Photo Paper Plus Glossy II or other Canon specialty paper.

➡ Supported Media Types

Check3 Correct curl before loading paper.

When using Photo Paper Plus Semi-gloss, even if the sheet is curled, load one sheet at a time as it is. Rolling this paper in the opposite direction to flatten it may crack the paper surface and reduce the print quality.

We recommend putting unused paper back into the package and storing it flat.

- **Plain Paper**

  Turn the paper over and reload it to print on the other side.

- **Other Paper such as envelope**

  If the paper corners curl more than 0.1 in. / 3 mm (A) in height, the paper may smudge or may not feed properly. Follow the instructions below to correct the paper curl.

1. Roll up paper in opposite direction to paper curl as shown below.

2. Check that paper is now flat.

   We recommend printing curl-corrected paper one sheet at a time.

Note

- Depending on paper type, the paper may smudge or may not feed properly even if it is not curled inward. Follow the instructions below to curl the paper outward up to 0.1 in. / 3 mm (C) in height before printing. This may improve the print result.

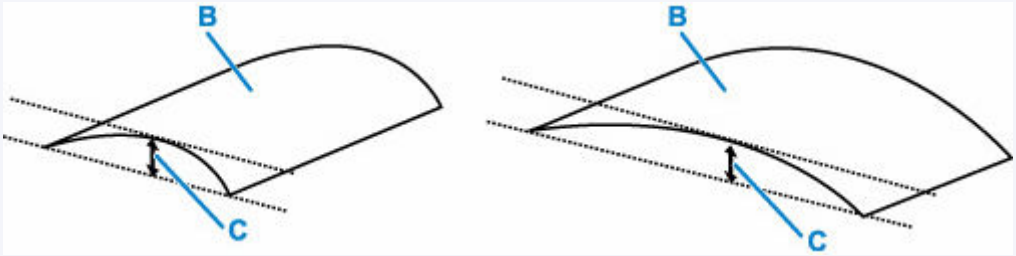

(B) Print side

We recommend feeding paper that has been curled outward one sheet at a time.

Check4 Set printer to prevent paper abrasion.

Adjusting the setting to prevent paper abrasion will widen the clearance between the print head and the paper. If you notice abrasion even with the media type set correctly to match the paper, set the printer to prevent paper abrasion using the operation panel or the computer.

This may reduce the print speed.

* This setting will be disabled by turning off the printer.

Press and hold the **Stop** button on the operation panel and release it when the **Alarm** lamp flashes 5 times to set the printer to prevent paper abrasion.

Check5 If brightness is set low, increase brightness setting and try printing again.

If you are printing with a low brightness setting on plain paper, the paper may absorb too much ink and become wavy, causing paper abrasion.

- Printing from your computer (Windows)

  Check the brightness setting in the printer driver.

  ➡ Changing settings of print option

Check6 Is paper feed roller dirty?

Clean paper feed roller.

➡ Cleaning Paper Feed Rollers

Note

- Cleaning the paper feed roller abrades it, so do this only when necessary.

Check7 Is inside of printer dirty?

During duplex printing, ink may stain the inside of the printer, smudging the printout.

Perform bottom plate cleaning to clean inside of printer.

➡ Cleaning Inside the Printer (Bottom Plate Cleaning)

Note

- To prevent staining inside the printer, be sure to set the correct paper size.

Check8 Set longer ink drying time.

This allows the printed surface to dry, preventing smudges and scratches.

- **For Windows:**

  Set the waiting time using Canon IJ Printer Assistant Tool.

  ➡ Changing the Printer Operation Mode

- **For macOS:**

  Set the waiting time using Remote UI.

  ➡ Opening Remote UI for Maintenance

Q

Vertical Line Next to Image

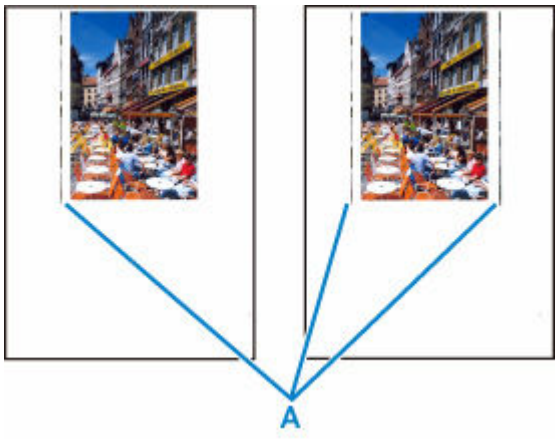

A

Check Is loaded paper size correct?

If the loaded paper is larger than the size you specified, vertical lines (A) may appear in the left margin or the both margins.

Set the paper size to match the loaded paper.

➡Printout (Copy) Results Are Unsatisfactory

Note

- The direction or pattern of the vertical lines (A) may vary depending on the image data or the print setting.
- This printer performs automatic cleaning when necessary to keep printouts clean. A small amount of ink is ejected for cleaning.

  Although the ink is normally ejected onto the ink absorber at the outer edge of the paper, it may get onto the paper if the loaded paper is larger than the set size.

Q

Images Incomplete/Cannot Complete Printing

A

If the printing of photos, images, stops in the middle of printing and cannot be printed to the end, check the following items.

Check1 Select setting not to compress printing data. (Windows)

If you select the setting not to compress the printing data with an application software you are using, the printing result may be improved.

Click **Print Options** on **Page Setup** sheet of the printer driver. Select the **Do not allow application software to compress print data** check box and click **OK**.

Important

- Clear the check box once printing is complete.

Check2 Are you trying to print a large data file? (Windows)

If you are trying to print a large data file, printing may not be performed properly due to missing print data.

Select **On** for **Prevention of Print Data Loss** on the **Print Options** dialog box of the printer driver.

For details, refer to Page Setup Tab Description.

Important

- Selecting **On** for **Prevention of Print Data Loss** may reduce print quality.
- After printing is completed, select **Off** for **Prevention of Print Data Loss**.

Check3 Your hard disk may not have sufficient free space to store job.

Delete unnecessary files to free up disk space.

Lines Incomplete or Missing (Windows)

	Tokyo	London
Jan.	12,000	10,500
Feb.	11,500	10,800
Mar.	13,800	12,800
Apr.	12,000	10,500
May.	11,500	10,800
June	13,800	12,800

Check1 Are you using Page Layout Printing or Binding Margin function?

When the Page Layout Printing or Binding margin function is in use, thin lines may not be printed. Try thickening the lines in the document.

Check2 Are you trying to print a large data file? (Windows)

If you are trying to print a large data file, printing may not be performed properly due to missing print data.

Select **On** for **Prevention of Print Data Loss** on the **Print Options** dialog box of the printer driver.

For details, refer to Page Setup Tab Description.

Important

- Selecting **On** for **Prevention of Print Data Loss** may reduce print quality.
- After printing is completed, select **Off** for **Prevention of Print Data Loss**.

Q

Back of Paper Is Smudged

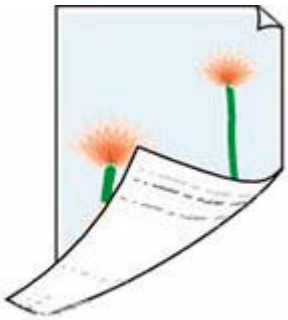

A

Check1 Check paper and print quality settings.

➡ Printout (Copy) Results Are Unsatisfactory

Check2 Perform bottom plate cleaning to clean inside of printer.

➡ Cleaning Inside the Printer (Bottom Plate Cleaning)

Note

- During borderless printing, duplex printing, or too much printing, ink may stain the inside of the printer.

Uneven or Streaked Colors

Check1 Increase print quality and try printing again.

Increasing the print quality from computer may improve the print result.

Check2 Perform print head alignment.

➡ Adjusting Print Head Position

Change to Offline (Windows)

If the printer cannot communicate with the computer, an error message "Offline" may be displayed when printing. To bring the printer back online, try the following.

1. Check the connection (USB/Wi-Fi/Wired LAN).

   For USB connection:

   Make sure that the USB-connected printer is recognized by the computer.

   For Wi-Fi/Wired LAN connections:

   Make sure that or icon appears on the printer's touch screen.

2. Turn off printer and then turn it on again.

   Confirm that the offline mode has been disabled. If the printer is still offline, proceed to the next step.

3. Check the name of the printer driver.

   Check the names of the printer and printer driver match and set the using printer as default.

   ➡ Default Printer Keeps Changing (Windows)

   Confirm that the offline mode has been disabled. If the printer is still offline, proceed to the next step.

4. Make sure that printer is not set to **Use Printer Offline** mode.

   1. Start up Canon IJ Printer Assistant Tool.

      ➡ Opening the Maintenance Tool (Canon IJ Printer Assistant Tool)

      Note

      - If the printer selection screen is displayed, select the appropriate printer.

   2. Click **View Printer Status** on the lower left of the Canon IJ Printer Assistant Tool.

      The viewing Printer Status screen is displayed.

   3. Click **Display Print Queue** of the viewing printer status screen.

   4. Click **Printer** menu in the window displayed.

      Make sure **Use Printer Offline** is not selected.

      If it is selected, click **Use Printer Offline** to deselect it.

Confirm that the offline mode has been disabled. If the printer is still offline, proceed to the next step.

5. Uninstall printer driver and reinstall printer driver.

   If your printer driver version is old or not installed correctly, you may not be able to print.

   Confirm that the offline mode has been disabled. If the printer is still offline, proceed to the next step.

6. Restart computer.

   The computer may be unstable for some reason. Restart the computer and try to print.

   Important

   - When restarting the computer, choose **Restart** instead of **Shut down**.

Mechanical Problems

- Printer Does Not Turn On
- Printer Turns Off Unexpectedly or Repeatedly
- USB Connection Problems
- Printer Status Monitor Not Displayed (Windows)

Printer Does Not Turn On

Check1 Press **ON** button.

➡ Power Supply

Check2 Make sure power plug is securely connected to printer, and then turn on again.

Check3 Unplug printer, leave it for at least 2 minutes, and then plug it back in and turn on again.

If this does not solve the problem, contact your nearest Canon service center to request a repair.

Q

Printer Turns Off Unexpectedly or Repeatedly

A

Check If printer is set to turn off automatically after a certain time, disable this setting.

If you have set the printer to turn off automatically after a specified time, the power will shut off by itself once that time has elapsed.

1. Display the information of the printer in your web browser.

   ➡ Configuration Changes / Display Printer Status Using Web Browser

2. Select **Printer settings**.

3. Select **Energy saving settings**.

4. Select **Auto power off**.

5. Select **OFF**.

6. Select **OK**.

   The setting to shut off the power automatically is disabled.

Note

- If this setting is changed, power consumption may increase.

USB Connection Problems

If the printer connected to the computer via USB is not recognized, check the following items.

➡ USB Connection Not Recognized

The following problems may occur even though the USB connection is recognized.

- Printing (scanning) is slow.
- Hi-Speed USB connection does not work.
- A message such as "**This device can perform faster**" appears. (Windows)

If the above is the case, check the following.

➡ USB Connection Does Not Work Properly

Note

- If your system environment does not support Hi-Speed USB, the printer operates at the slower speed of Full-Speed or Low-Speed. In this case, the printer works properly but printing (scanning) speed may slow down due to the communication speed.

USB Connection Not Recognized

Check1 Check that printer is turned on.

Check2 Unplug the USB cable from the printer and the computer, and then connect it again.

As the illustration below, the USB port is at the back of the printer.

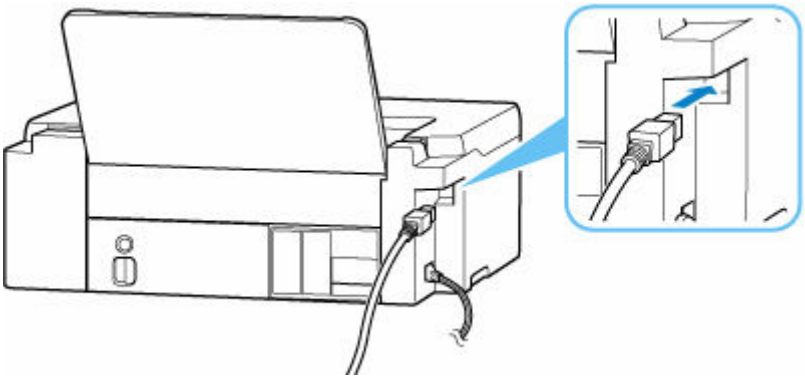

Important

- Check the orientation of the "Type-B" connector and connect to the printer. For details, refer to the instruction manual supplied with the USB cable.

Check3 Check that **Enable bidirectional support** is selected in **Ports** sheet of **Printer properties** dialog box. (Windows)

If not, select it to enable bidirectional support.

➡ Opening Printer Driver's Setup Screen

USB Connection Does Not Work Properly

Check Check following to make sure your system environment supports Hi-Speed USB connection.

- The types of USB cables that can be used differ depending on your printer. Check the shape of the USB cable connection of the printer.

  ➡ What Is USB Cable?

- Does the USB port on your computer support Hi-Speed USB connection?
- Does the USB cable or the USB hub support Hi-Speed USB connection?

  Be sure to use a certified Hi-Speed USB cable. We recommend that the USB cable be no longer than 10 feet / 3 meters or so.

- Is the Hi-Speed USB driver working properly on your computer?

  Make sure the latest Hi-Speed USB driver is working properly and install the latest version of the Hi-Speed USB driver for your computer, if necessary.

Important

- For more information, contact the manufacturer of your computer, USB cable, or USB hub.

Installation and Download Problems

- Failed to MP Drivers (Printer Driver) Installation (Windows)
- Cannot Proceed Beyond Printer Connection Screen (Cannot Find Printer Connected via USB)
- Disable Function to Send Usage Information of Printer

Failed to MP Drivers (Printer Driver) Installation (Windows)

If the MP Drivers (Printer Driver) were not installed correctly, make sure that all **Windows Updates** have been applied. If all **Windows Updates** have not been applied, apply all **Windows Updates**.

After confirming **Windows Update**, perform the following operations to install the MP Drivers (Printer Driver).

1. Open screen to uninstall MP Drivers (Printer Driver).

   For Windows 11:

   Select **Settings** > **Apps**.

   Select **Apps & features**.

   For Windows 10:

   Select **Settings** > **Apps**.

   For Windows 8.1 / Windows 7:

   Select **Control Panel** > **Programs and Features**.

2. Check if there is "**Canon XXX series Driver**" or "**Canon XXX series Printer Driver**" you want to install in list.

   "XXX" is the model name.

3. If you find MP Drivers (Printer Driver) for printer you want to install, uninstall it.

   If not found, proceed to the next step.

4. Restart computer.

   After restarting, install the latest MP Drivers (Printer Driver).

   Important

   - For Windows:

     To restart your computer, choose **Restart** instead of **Shut down**.

Cannot Proceed Beyond Printer Connection Screen (Cannot Find Printer Connected via USB)

If you cannot proceed beyond the **Printer Connection** screen, check the following.

Check1 Make sure USB cable is securely plugged in to printer and computer.

Connect the printer and the computer using a USB cable as the illustration below. The USB port is located at the back of the printer.

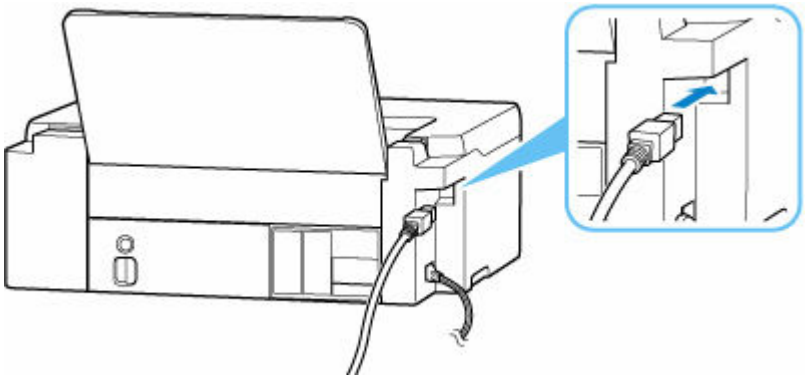

Important

- Check the orientation of the "Type-B" connector and connect to the printer. For details, refer to the instruction manual supplied with the USB cable.

Check2 Follow procedure below to connect printer and computer again.

Important

- For macOS, make sure the lock icon is on the lower left of the **Printers & Scanners** screen.

  If the icon (locked) is displayed, click the icon to unlock. (The administrator name and the password are necessary to unlock.)

1. Unplug USB cable from printer and computer and connect it again.
2. Make sure no printer operation is in progress and turn off.
3. Turn on printer.

Check3 Follow the steps below to install MP Drivers (Printer Driver) again.

1. Download the latest MP Drivers (Printer Driver).

2. Turn off printer.

3. Restart computer.

   After restarting, install the latest MP Drivers (Printer Driver) downloaded in step 1.

Important

- When installing the MP Drivers (Printer Driver), make sure you select the correct printer name.
- For Windows:

  To restart your computer, choose **Restart** instead of **Shut down**.

Errors and Messages

- When Error Occurred
- Message Is Displayed

When Error Occurred

If an error occurs while printing, for example, if the paper runs out or jams, the printer's **Alarm** lamp and/or **ON** lamp will flash, and a troubleshooting message will be displayed on the computer screen.

If you are using Windows, the support code (error number) may be displayed with the message.

If you are using macOS, you can check the support code (error number) on the Remote UI.

Take the appropriate action described in the message.

When a Support Code and a Message are displayed on the Computer Screen (Windows):

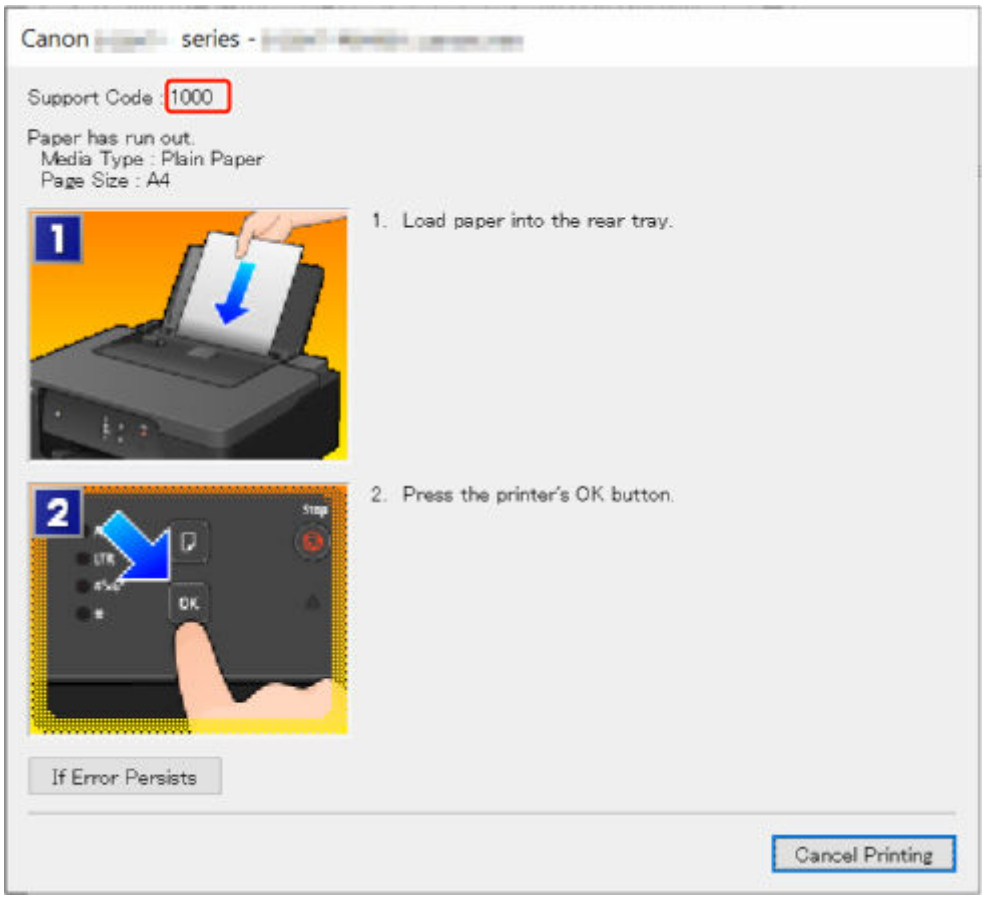

For details on how to resolve errors with Support Codes, see List of Support Codes for Printer Errors.

For details on how to resolve errors without Support Codes, see Message Is Displayed.

When the Alarm lamp and/or ON lamp flashes:

The flash pattern and number of flashes vary depending on the cause of the error.

The **Alarm** lamp will flash/light when an error occurs that has a clear cause and remedy, such as when no paper is loaded or the paper is jammed.

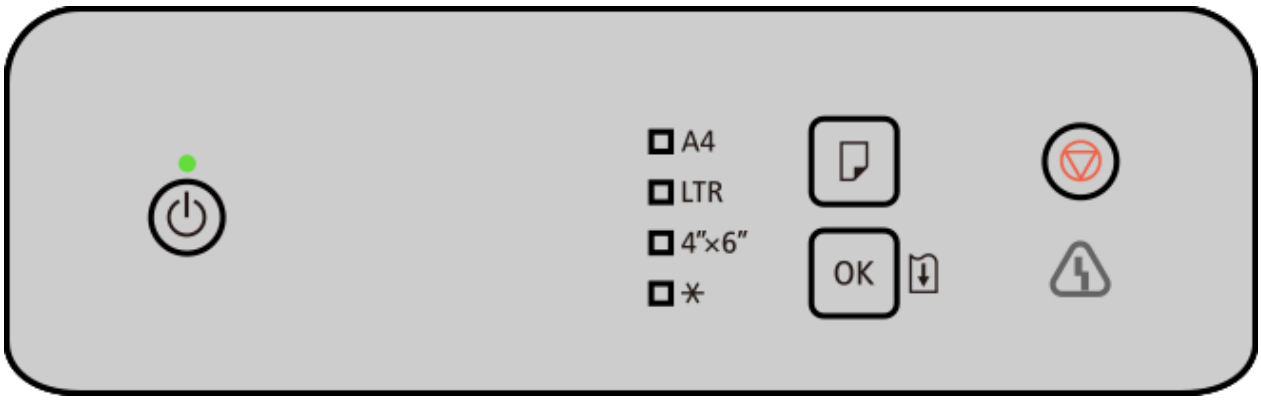

When an error occurs that may require repair, the **Alarm** lamp and **ON** lamp will flash alternately.

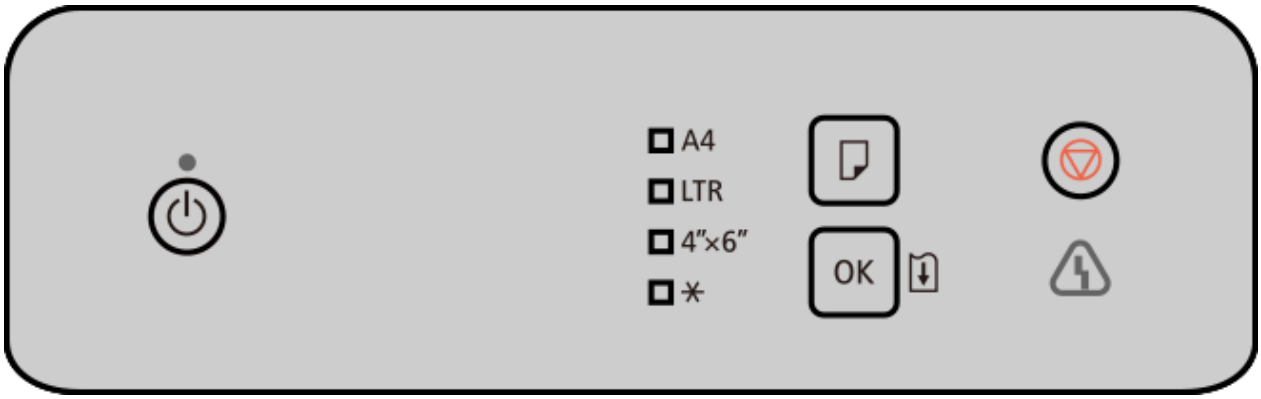

See **Alarm** Lamp and **ON** Lamp in the Event of an Error for the flashing/lighting of the lamps when an error occurs.

Message Is Displayed

This section describes some of the messages that will be displayed on the computer screen.

- Error Regarding Power Cord Being Unplugged Is Displayed (Windows)
- Writing Error/Output Error/Communication Error (Windows)
- Other Error Messages (Windows)

Error Regarding Power Cord Being Unplugged Is Displayed (Windows)

The printer may have been unplugged while it was on.

Check the error message displayed on the computer and click **OK**.

The printer starts printing.

See Unplugging the Printer to unplug the printer correctly.

Writing Error/Output Error/Communication Error (Windows)

Check 1 If the **ON** lamp is off, make sure printer is plugged in and turn on.

The **ON** lamp flashes while the printer is initializing. Wait until the **ON** lamp stops flashing and remains lit.

Check 2 Make sure printer is properly connected to computer.

Make sure it is securely connected to both the printer and the computer. When the USB cable is securely plugged in, check the following:

- If you are using a relay device such as a USB hub, disconnect it, connect the printer directly to the computer, and retry the printing. If printing starts normally, there is a problem with the relay device. Contact the vendor of the relay device.
- There could also be a problem with the USB cable. Replace the USB cable and retry the printing.

Check 3 Make sure printer driver is installed correctly.

Refer to Updating the Driver to uninstall unnecessary driver and install the latest driver.

Check 4 Check device status from your computer.

Follow the procedure below to check the device status.

1. Select **Control Panel** > **Hardware and Sound** > **Device Manager**.

   Note

   - If the **User Account Control** screen is displayed, select **Yes**.

2. Open **USB Printing Support Properties**.

   Double-click **Universal Serial Bus controllers** and **USB Printing Support**.

Note

- If the **USB Printing Support Properties** screen is not displayed, make sure the printer is correctly connected to the computer.

  Check 2 Make sure printer is properly connected to computer.

3. Click **General** tab and check for a device problem.

   If a device error is shown, see Windows Help to resolve it.

Other Error Messages (Windows)

Check If an error message is displayed somewhere other than printer status monitor, check the following:

- **"Could not spool successfully due to insufficient disk space"**

  Delete any unnecessary files to increase the amount of free space on the disk.

- **"Could not spool successfully due to insufficient memory"**

  Close other applications to increase the available memory.

  If you still cannot print, restart your computer and retry the printing.

- **"Printer driver could not be found"**

  Refer to Updating the Driver to uninstall unnecessary drivers and install the latest drivers.

- **"Could not print Application name** - File name"

  Try printing again once the current job is complete.

List of Support Codes for Printer Errors

When errors occur, support codes are displayed on your computer screen and the **Alarm** lamp and/or **ON** lamp flashes/lights.

A "support code" is an error number, and is displayed along with an error message.

When an error occurs, check the support code and take the appropriate action in response.

Support Codes Displayed on Computer Screen

- **1000 to 1ZZZ**

  1000 1070 1071 1072 1073 1200 1215 1300 1368 1372 1431 1432
  1470 1471 1472 1473 1476 1496 15A0 1640 1717 1718 1719 171A
  1723 1724 1725 1726 1727

- **2000 to 2ZZZ**

  2114 2116 2123 2200

- **3000 to 3ZZZ**

  3252 3442 3443 3444 3445

- **4000 to 4ZZZ**

  4103 4104 410D

- **5000 to 5ZZZ**

  5100 5107 5200 5205 5206 5400 5C02 5C30

- **6000 to 6ZZZ**

  6000 6006 6500 6800 6801 6930 6931 6932 6933 6940 6941 6942
  6943 6944 6945 6946 6D01

- **7000 to 7ZZZ**

  7500 7600 7700 7800

- **A000 to ZZZZ**

  B20B

Alarm Lamp and ON Lamp in the Event of an Error

The number of times the **Alarm** lamp flashes and the number of times the **Alarm** lamp and **ON** lamp alternately flash can be used to determine the appropriate action.

Number of times the Alarm lamp flashes and what to do

Number of flashes	Cause	What to Do
2	**During manual duplex printing:**	Follow the instructions on the computer screen to prepare the other side for printing.
	Other:	Refer to the page corresponding to the support code displayed on your computer screen. ➡ 1000 ➡ 1070 ➡ 2114 ➡ 2116
3	Paper is jammed.	➡ What to Do When Paper Is Jammed
4	Print head is not installed properly.	➡ 1470
5	The print head may not be installed properly or may not be compatible with this printer.	➡ 1431 ➡ 1432 ➡ 1471 ➡ 1476
6	Business card-sized paper was loaded horizontally, which caused it to jam.	➡ What to Do When Paper Is Jammed While Printing Business Cards
8	Possible causes include the following. • Maintenance cartridge is not installed. • The maintenance cartridge is not installed properly. • The maintenance cartridge may not be compatible with this printer.	Refer to the page corresponding to the support code displayed on your computer screen. ➡ 1496 ➡ 1723 ➡ 1725
9	There may be paper left inside the printer.	➡ What to Do When Paper Is Jammed While Printing Business Cards
10	Unable to proceed with print head replacement because the maintenance cartridge is almost full.	➡ 1372
11	Cannot perform printing with current print settings.	Refer to the page corresponding to the support code displayed on your computer screen. ➡ 4103

		➡ 4104 ➡ 410D
12	Business card-sized paper is not loaded.	➡ What to Do When Paper Is Jammed While Printing Business Cards
14	The print head may not be installed properly or may not be compatible with this printer.	➡ 1473
15	The print head may not be installed properly or may not be compatible with this printer.	➡ 1472
17	The maintenance cartridge is almost full.	➡ 1727
18	The maintenance cartridge is full.	➡ 1726
20	Maintenance cartridge that has been installed in another printer is installed.	➡ 1724
22	The ink absorber for borderless printing is almost full.	➡ 1719 ➡ 171A
25	An internal part will need replacing soon.	➡ 2200
28	The ink absorber for borderless printing is full.	➡ 1717 ➡ 1718
Lights	**During Replace Ink in Print Head:**	➡ 1368
	Other:	➡ 1640

Number of times the ON lamp and Alarm lamp alternately flash and what to do

Number of flashes	Cause	What to Do
2	Printer error has occurred.	➡ 5100
8	Printer error has occurred.	➡ 5200
10 14	An error requiring a repair has occurred.	Turn off the printer and unplug it. Contact your nearest Canon service center to request a repair. **Important** • Do not tilt the printer when moving it since the ink may leak out. • When transporting the printer for repairing it, see Repairing Your Printer.
Other	Printer error has occurred.	Turn off the printer and unplug it. Plug in the printer again and turn it back on.

		If this does not solve the problem, contact your nearest Canon service center to request a repair. **Important** • Do not tilt the printer when moving it since the ink may leak out. • When transporting the printer for repairing it, see Repairing Your Printer.

Note

- If no support code is displayed but the paper is not fed or output normally, see What to Do If Paper Is Not Fed/Output Normally.

What to Do When Paper Is Jammed

If a paper jam occurs during printing (when the support code 1300 is displayed), follow the procedure below.

Note

- If the paper is not jammed (no support code displayed) but the paper is not fed or output normally, see What to Do If Paper Is Not Fed/Output Normally.

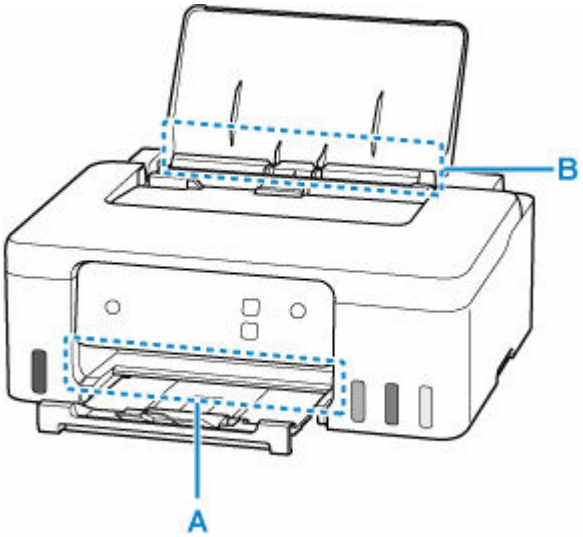

Important

- When checking the paper output slot / feed slot or removing any foreign objects, do not turn the printer upside down or tilt it. The ink may leak out.

Check 1 Did you try to print on a small paper size such as **4"x6" 10x15cm** or **Card** size?

➡ What to Do When Small Paper Sizes Are Jammed

Check 2 Is the jammed paper visible in the paper output slot (A)?

➡ Removing Jammed Paper through Paper Output Slot

Check 3 Are there any foreign objects in the feed slot of the rear tray (B)?

➡ What to Do If Paper Is Not Fed/Output Normally

Check 4 Is the jammed paper visible in the feed slot (B)?

Remove any paper other than the jammed paper on the rear tray, and then check if the jammed paper is visible in the feed slot.

➡ Removing Jammed Paper through Feed Slot

Check 5 If the jammed paper is not visible in the paper output slot or the feed slot.

➡ Removing Jammed Paper inside Printer

Removing Jammed Paper through Paper Output Slot

1. Hold jammed paper firmly with both hands and pull it out slowly.

   Slowly pull out the paper so as not to tear it.

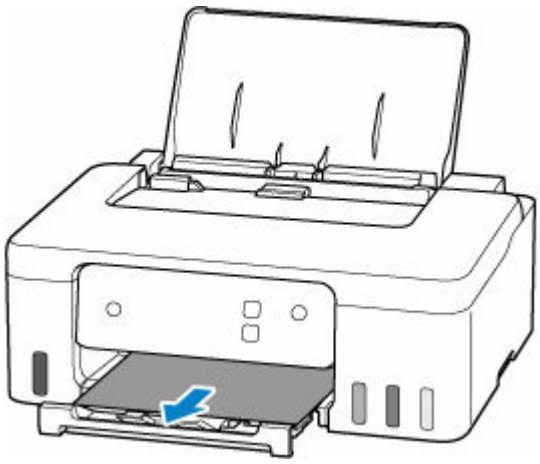

Note

- If you cannot pull out the paper, turn the printer back on without pulling forcibly. The paper may be ejected automatically.

  Press the printer's **Stop** button to stop printing, and then turn off the printer.

- If the paper cannot be pulled out or is torn, open the printer's top cover and remove jammed paper inside the printer.

  ➡ Removing Jammed Paper inside Printer

2. Press printer's **OK** button.

   The printer resumes printing. Reprint the page you were printing if it was not printed properly due to the paper jam.

   If you turned off the printer in step 1, all jobs in the print queue are canceled. Redo the printing.

Note

- When reloading the paper, make sure you are using suitable paper and loading it correctly.
- We recommend using paper sizes other than A5 to print documents with photos or graphics. A5 paper may curl and jam as it leaves the printer.

If the measures above do not solve the problem, a bit of paper may remain in the printer. See Removing Jammed Paper inside Printer.

Removing Jammed Paper through Feed Slot

1. Hold jammed paper firmly with both hands and pull it out slowly.

   Slowly pull out the paper so as not to tear it.

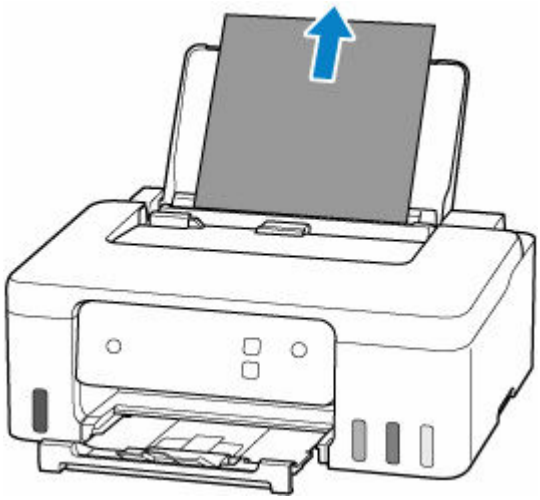

Note

- If the paper cannot be pulled out or is torn, open the top cover and remove the jammed paper inside the printer.

  ➡ Removing Jammed Paper inside Printer

2. Load paper in rear tray.

➡ Loading Photo Paper / Plain Paper
➡ Loading Envelopes

Note

- Make sure you are using suitable paper and loading it correctly.
- We recommend using paper sizes other than A5 to print documents with photos or graphics. A5 paper may curl and jam as it leaves the printer.

3. Press printer's **OK** button.

The printer resumes printing. Reprint the page you were printing if it was not printed properly due to the paper jam.

If the measures above do not solve the problem, a bit of paper may remain in the printer. See Removing Jammed Paper inside Printer.

Removing Jammed Paper inside Printer

1. Press printer's **Stop** button.

2. Turn off printer and unplug it.

3. Open top cover.

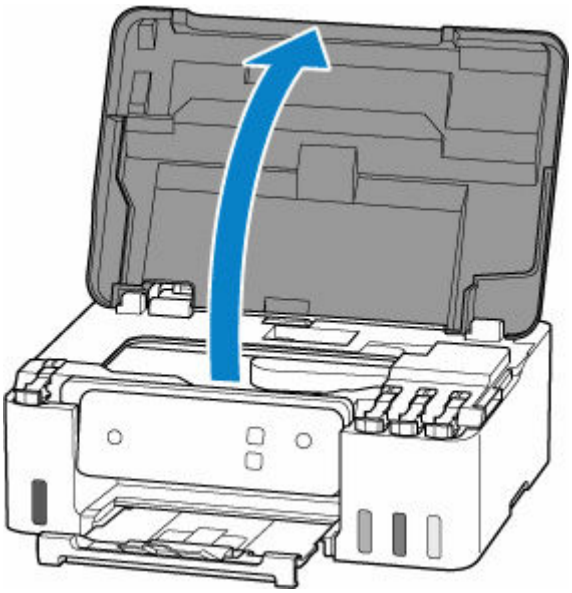

Important

- Do not touch the clear film (A), white belt (B), or tubes (C).

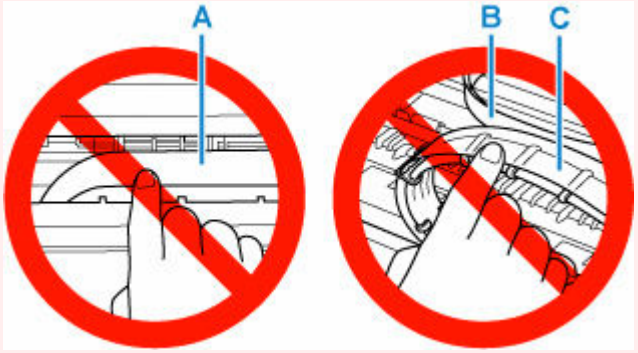

If you soil or scratch this part by touching it with paper or your hand, it could damage the printer.

4. Check if jammed paper is under print head holder.

If the jammed paper is under the print head holder, move the print head holder to the far right or left, whichever makes it easier to remove the paper.

When moving the print head holder, hold the print head holder and slide it slowly to the far right or left.

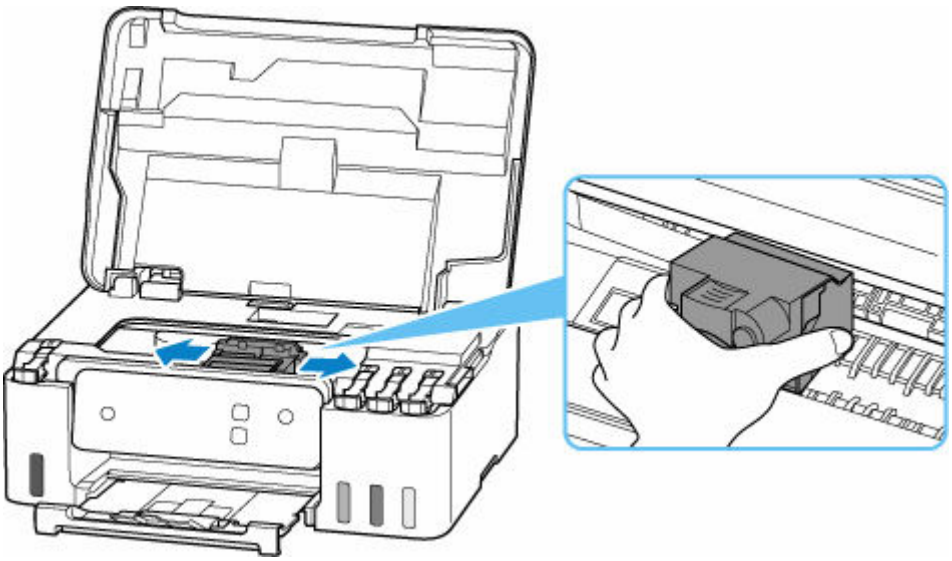

5. Hold jammed paper firmly with both hands.

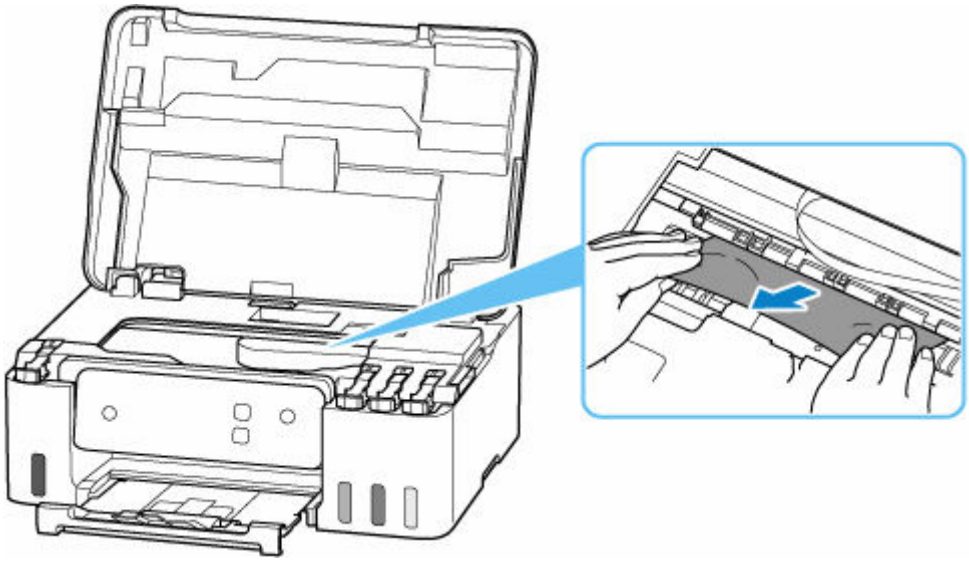

If the paper is rolled up, pull it out and grasp the edges of the paper.

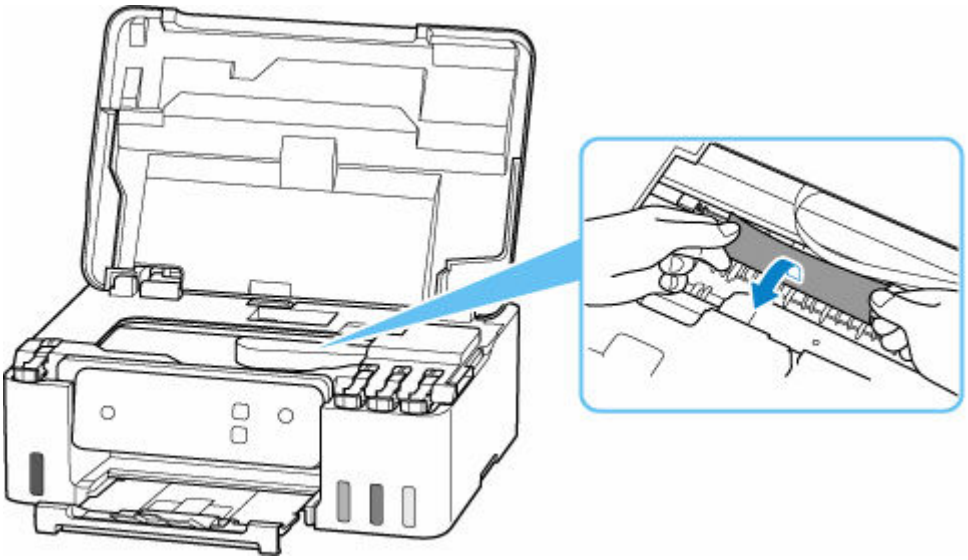

6. Slowly pull out jammed paper so as not to tear it.

Pull out the paper at an angle of about 45 degrees.

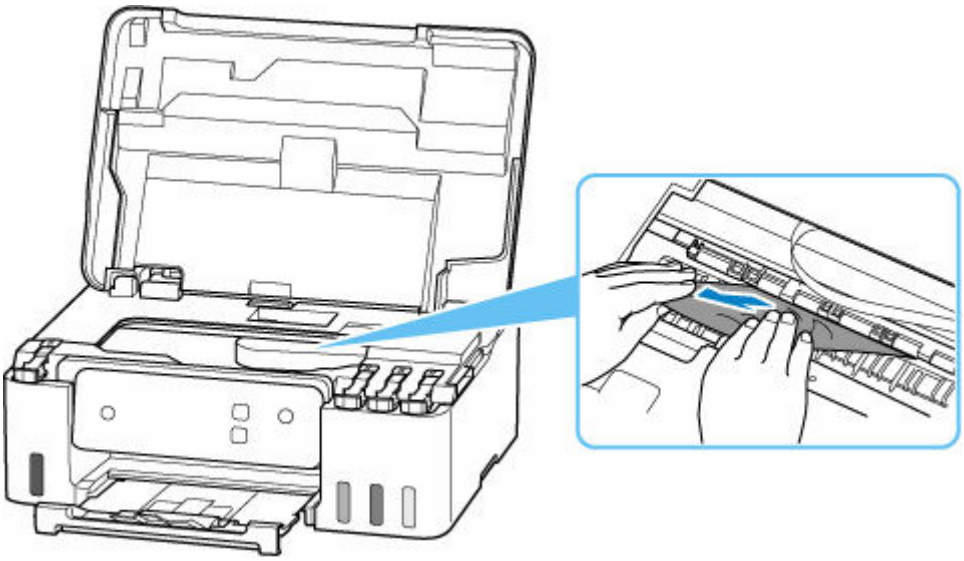

7. Make sure all jammed paper is removed.

If the paper tears when you pull out it, a bit of paper may remain in the printer. Check the following and remove any remaining paper.

- Any paper left under the print head holder?
- Any small bits of paper left in the printer?
- Any paper left in the left and right empty spaces (D) in the printer?

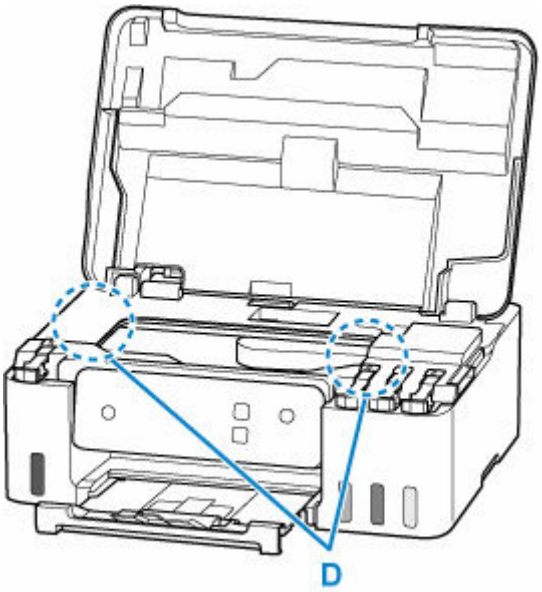

8. Close top cover gently.

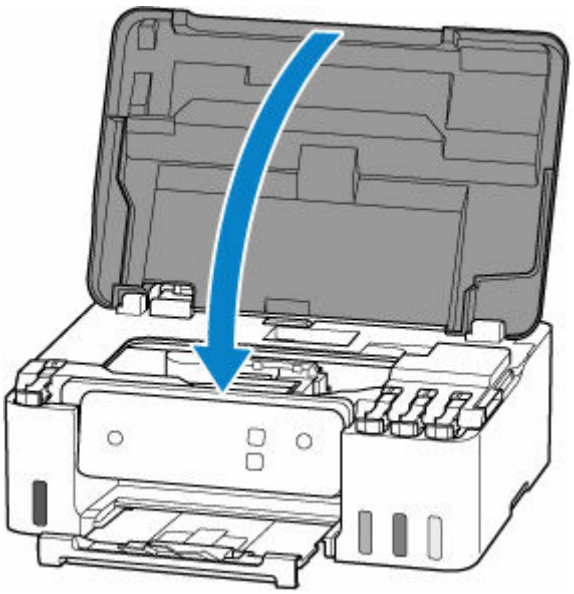

9. Plug printer back in and turn printer back on.

10. Load paper.

    - Loading Photo Paper / Plain Paper
    - Loading Envelopes

    Note

    - Make sure you are using suitable paper and loading it correctly.
    - We recommend using paper sizes other than A5 to print documents with photos or graphics. A5 paper may curl and jam as it leaves the printer.

11. Redo printing.

    All jobs in the print queue are canceled. Redo the printing.

    Note

    - If the 1300 error recurs, check the feed slot of the rear tray again. If a foreign object is in the rear tray, refer to Check 1 in What to Do If Paper Is Not Fed/Output Normally and take appropriate action.

If the measures above do not solve the problem, contact your nearest Canon service center to request a repair.

Important

- Do not tilt the printer when moving it since the ink may leak out.
- When transporting the printer for repairing it, see Repairing Your Printer.

1000

Cause

Possible causes include the following.

- There is no paper in the rear tray.
- Paper is not loaded in the rear tray properly.
- There are any foreign objects in the rear tray.

What to Do

- After loading the paper in the rear tray correctly, press the printer's **OK** button to cancel the error.

  ➡ Loading Photo Paper / Plain Paper
  ➡ Loading Envelopes

- If a foreign object is in the rear tray, refer to Check 1 in What to Do If Paper Is Not Fed/Output Normally and take appropriate action.

1200

Cause

Top cover is open.

What to Do

Close the top cover and wait for a while.

Make sure to close the top cover after refilling ink or other operations.

1368

Cause

Replace Ink in Print Head cannot be performed because the maintenance cartridge is almost full.

What to Do

To perform Replace Ink in Print Head, first turn off the printer and then replace the maintenance cartridge.

➡ Replacing the Maintenance Cartridge

Press the printer's **OK** button to cancel the error.

1496

Cause

The maintenance cartridge may not be installed properly or may not be compatible with this printer.

What to Do

Remove the maintenance cartridge, and then reinstall it correctly.

Refer to Replacing the Maintenance Cartridge for details on removing and installing the maintenance cartridge.

1640

Cause

The remaining ink level in one of the ink tanks may have reached the lower limit line shown on the ink tank.

What to Do

To check the remaining ink level, visually inspect the remaining ink in the ink tank.

If printing is continued when the remaining ink level is below the lower limit line, the printer may consume a certain amount of ink to return to printable status.

- To resume printing after refilling the ink tanks:

  Refill each color of ink to the upper limit line shown on the ink tank and press the printer's **OK** button for at least 5 seconds. If any ink tank is not refilled to the upper limit line, a significant error may occur in the accuracy of the remaining ink level notification function.

- To resume printing without refilling the ink tanks:

  Press the printer's **OK** button. Printing will restart.

  Note

  - The remaining ink level notification function will be disabled.

Please be advised that Canon shall not be liable for any malfunction or trouble caused by using non-genuine Canon ink.

1723

Cause

The maintenance cartridge is not installed.

What to Do

Install the maintenance cartridge.

Refer to Replacing the Maintenance Cartridge for details on installing the maintenance cartridge.

1724

Cause

The currently installed maintenance cartridge cannot be used.

This printer cannot use maintenance cartridges that have been installed in other printers.

What to Do

Replace with a new maintenance cartridge.

➡ Replacing the Maintenance Cartridge

1725

Cause

The maintenance cartridge may not be installed properly or may not be compatible with this printer.

What to Do

Remove the maintenance cartridge, and then reinstall it correctly.

Refer to Replacing the Maintenance Cartridge for details on removing and installing the maintenance cartridge.

1726

Cause

The maintenance cartridge is full.

What to Do

Turn off the printer and then replace the maintenance cartridge.

➡ Replacing the Maintenance Cartridge

Note

- The condition of the maintenance cartridge when this error is displayed will depend on where and how the printer is used.

  When this message is displayed, you must replace the maintenance cartridge.

1727

Cause

The maintenance cartridge is almost full.

What to Do

The printer will not be able to print with a full maintenance cartridge.

Press the printer's **OK** button to cancel the error and then prepare a new maintenance cartridge.

For details on the maintenance cartridge, see Replacing the Maintenance Cartridge.

2114

Cause

The paper setting specified at the time of printing is different from the paper information registered in the printer.

Note

- To disable notifications for this error, disable the function to detect paper setting mismatch.

What to Do

Press the printer's **Stop** button to cancel printing.

Match the paper loaded in the rear tray with the paper information registered in the printer using the printer's **Paper Select** button.

In the paper settings specified at the time of printing, specify the paper information registered in the printer, and retry printing.

Note

- To continue printing without changing printer settings, press the printer's **OK** button.
- See below for paper information (paper size and paper type) that can be registered in the printer using the printer's **Paper Select** button.

  ➡ Paper Settings

2116

Cause

The paper setting specified at the time of printing is different from the paper information registered in the printer.

Note

- To disable notifications for this error, disable the function to detect paper setting mismatch.

What to Do

Press the printer's **Stop** button to cancel printing.

Match the paper loaded in the rear tray with the paper information registered in the printer using Web browser (**Remote UI**).

➡ Configuration Changes / Display Printer Status Using Web Browser

In the paper settings specified at the time of printing, specify the paper information registered in the printer, and retry printing.

Note

- To continue printing without changing printer settings, press the printer's **OK** button. This may cause the printed surface to be smudged or dirty.

2200

Cause

An internal part will need replacing soon.

What to Do

Press the printer's **OK** button to cancel the error.

You cannot replace the internal parts of the printer yourself. Contact your nearest Canon service center to request a repair as soon as possible.

Important

- Do not tilt the printer when moving it since the ink may leak out.
- When transporting the printer for repair, see Repairing Your Printer.

3252

Cause

The maintenance cartridge is almost full.

What to Do

The printer will not be able to print with a full maintenance cartridge.

Press the printer's **OK** button to clear the error message.

4103

Cause

Cannot perform printing with current print settings.

What to Do

Press the printer's **Stop** button to cancel printing.

Change the print settings specified when printing and retry printing.

5100

Cause

Printer error has occurred.

What to Do

Cancel printing and turn off the printer.

Check the following:

- Make sure print head holder motion is not impeded by protective material, jammed paper, etc.

  Remove any impediment.

  Important

  - When clearing an impediment to print head holder motion, be careful not to touch clear film (A), white belt (B), or tubes (C).

    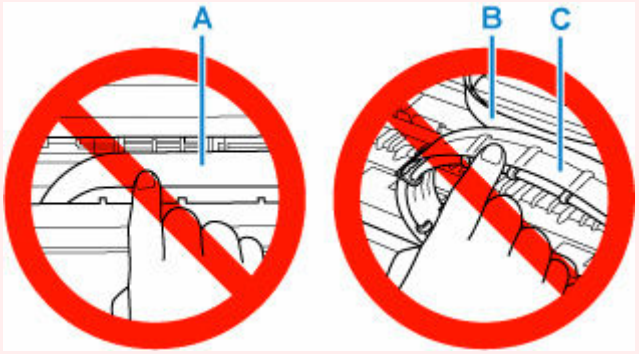

    If you soil or scratch this part by touching it with paper or your hand, it could damage the printer.

Turn the printer back on.

If this does not solve the problem, contact your nearest Canon service center to request a repair.

Important

- Do not tilt the printer when moving it since the ink may leak out.
- When transporting the printer for repairing it, see Repairing Your Printer.

5200

Cause

Printer error has occurred.

What to Do

Important

- Perform all of the following steps in order.

  Changing the order or omitting steps may cause other problems.

1. Check the remaining ink level, and then refill the ink tanks if necessary.
2. Turn off printer and unplug it.
3. Plug in printer again and turn it back on.
4. Perform **Replace Ink in Print Head**.

   ➡ Replace Ink in Print Head

If the error recurs after taking the above actions, you may be able to resolve it by replacing the print heads.

For details, click here.

Important

- If the error recurs after replacing the print heads, contact your nearest Canon service center to request a repair.
- Do not tilt the printer when moving it since the ink may leak out.
- When transporting the printer for repairing it, see Repairing Your Printer.

6000

Cause

Printer error has occurred.

What to Do

Turn off the printer and unplug it.

Plug in the printer again and turn it back on.

If this does not solve the problem, contact your nearest Canon service center to request a repair.

Important

- Do not tilt the printer when moving it since the ink may leak out.
- When transporting the printer for repairing it, see Repairing Your Printer.