Canon

TS6100 series

Online Manual

Basic Operation
Network
Maintenance
Overview of the Machine
Information about Paper
Printing
Copying
Scanning
Frequently Asked Questions
List of Support Code for Error

English

Contents

Using Online Manual. 9

Symbols Used in This Document. 10

Touch-enabled Device Users (Windows). 11

Trademarks and Licenses. 12

Basic Operation. 23

Printing Photos from a Computer. 24

Printing Photos from a Smartphone/Tablet. 29

Copying. 32

Network. 36

Restrictions. 38

Network Connection Tips. 40

Default Network Settings. 41

Another Printer Found with Same Name. 43

Connecting to Another Computer via LAN/Changing from USB to LAN Connection. 44

Printing Network Settings. 45

Changing Wireless LAN Connection Method. 50

Handling Paper, Originals, Ink Tanks, etc.. 51

Loading Paper. 52

Paper Sources. 53

Loading Paper in the Rear Tray. 54

Loading Paper in the Cassette. 59

Loading Envelopes. 64

Loading Originals. 68

Loading Originals on the Platen Glass. 69

Loading Based on Use. 71

Supported Originals. 74

How to Detach / Attach the Document Cover. 75

Replacing Ink Tanks. 77

Replacing Ink Tanks. 78

Checking Ink Status on the Touch Screen. 83

Ink Tips. 84

Maintenance. 85
If Printing Is Faint or Uneven. 86
Maintenance Procedure. 87
Printing the Nozzle Check Pattern. 89
Examining the Nozzle Check Pattern. 91
Cleaning the Print Head. 93
Deep Print Head Cleaning. 95
Aligning the Print Head. 97
Performing Maintenance Functions from Your Computer (Mac OS). 100
Opening Remote UI for Maintenance. 101
Cleaning the Print Heads. 102
Adjusting Print Head Position. 104
Checking Ink Status from Your Computer. 105
Cleaning. 106
Cleaning Paper Feed Rollers. 107
Cleaning Inside the Printer (Bottom Plate Cleaning). 109
Overview. 112
Safety. 113
Safety Precautions. 114
Regulatory Information. 115
WEEE (EU&EEA). 118
Handling Precautions. 128
Legal Restrictions on Scanning/Copying. 129
Printer Handling Precautions. 130
Transporting Your Printer. 131
When repairing, lending, or disposing of the printer. 132
Keeping Print Quality High. 133
Main Components and Their Use. 134
Main Components. 135
Front View. 136
Rear View. 138
Inside View. 139
Operation Panel. 140

Power Supply. 141
Confirming that the Power Is On. 142
Turning the Printer On and Off. 143
Checking the Power Plug/Power Cord. 145
Unplugging the Printer. 146
Using the Operation Panel. 147
Changing Settings. 151
Changing Printer Settings from Your Computer (Mac OS). 152
Managing the Printer Power. 153
Changing the Printer Operation Mode. 154
Changing Settings from Operation Panel. 155
Changing Settings from Operation Panel. 156
Setting Items on Operation Panel. 158
Print settings. 159
LAN settings. 160
Device user settings. 165
Language selection. 167
Firmware update. 168
Feed settings. 169
Reset setting. 170
Web service setup. 171
System information. 172
ECO settings. 173
Quiet setting. 175
Specifications. 176
Information about Paper. 180
Supported Media Types. 181
Paper Load Limit. 183
Unsupported Media Types. 185
Handling Paper. 186
Printing. 187
Printing from Computer. 188
Printing from Application Software (AirPrint). 189

Printing Using AirPrint. 190
Adding AirPrint Printer. 193
How to Open AirPrint Printer Settings Screen. 194
Display the Printing Status Screen. 195
Deleting the Undesired Print Job. 196
Removing AirPrint Printer That Is No Longer Required from List of Printers. 197
Printing from Smartphone/Tablet. 198
Printing from iOS Device (AirPrint). 199
Printing/Scanning with Wireless Direct. 203
Printing Using Operation Panel. 208
Printing Templates Such as Lined or Graph Paper. 209
Paper Settings. 213
Copying. 217
Making Copies. 218
Setting Items for Copying. 222
Scanning. 225
Scanning from Computer (AirPrint). 226
Scanning According to Item Type or Purpose (IJ Scan Utility Lite). 227
IJ Scan Utility Lite Features. 228
Scanning Easily (Auto Scan). 230
Scanning Documents and Photos. 232
Scanning Tips. 233
Positioning Originals (Scanning from Computer). 234
Frequently Asked Questions. 237
Network Settings and Common Problems. 239
Network Communication Problems. 241
Cannot Find Printer on Network. 242
Cannot Find Printer on Check Printer Settings Screen During Setup (Windows). 243
Cannot Find Printer on Check Printer Settings Screen During Wireless LAN Setup (Windows)-Checking Power Status. 244
Cannot Find Printer on Check Printer Settings Screen During Wireless LAN Setup (Windows)-Checking PC Network Connection. 245

Cannot Find Printer on Check Printer Settings Screen During Wireless LAN Setup (Windows)-Checking Printer's Wireless LAN Settings. 246
Cannot Find Printer on Check Printer Settings Screen During Wireless LAN Setup (Windows)-Checking Wireless LAN Environment. 247
Cannot Find Printer on Check Printer Settings Screen During Wireless LAN Setup (Windows)-Checking Printer's IP Address. 249
Cannot Find Printer on Check Printer Settings Screen During Wireless LAN Setup (Windows)-Checking Security Software Settings. 250
Cannot Find Printer on Check Printer Settings Screen During Wireless LAN Setup (Windows)-Checking Wireless Router Settings. 251
Cannot Proceed beyond Printer Connection Screen. 252
Cannot Find Printer while Using Wireless LAN. 254
Network Connection Problems. 257
Printer Suddenly Cannot Be Used. 258
Network Key Unknown. 263
Printer Cannot Be Used After Replacing Wireless Router or Changing Its Settings. 265
Other Network Problems. 267
Checking Network Information. 268
Restoring to Factory Defaults. 271
Printing Problems. 272
Printing Does Not Start. 273
No Ink Comes Out. 275
Paper Does Not Feed Properly/"No Paper" Error. 276
Print Results Are Unsatisfactory. 279
Paper Is Blank/Printing Is Blurry/Colors Are Wrong/White Streaks Appear. 281
Lines Are Misaligned. 284
Paper Is Smudged / Printed Surface Is Scratched. 285
Vertical Line Next to Image. 289
Scanning Problems (Mac OS). 290
Scanning Problems. 291
Scanner Does Not Work. 292
Scanner Driver Does Not Start. 293
Mechanical Problems. 294
Power Does Not Come On. 295
Power Shuts Off By Itself. 296
USB Connection Problems. 297

Cannot Communicate with Printer via USB. 298
Installation and Download Problems. 299
Cannot Install MP Drivers (Windows). 300
Updating MP Drivers in Network Environment (Windows). 302
Errors and Messages. 303
An Error Occurs. 304
Message (Support Code) Appears. 305
List of Support Code for Error. 312
List of Support Code for Error (Paper Jams). 314
1300. 315
1303. 317
1304. 318
1313. 319
Paper Is Jammed inside Printer. 320
Removing Jammed Paper from Rear Side. 323
1000. 327
1003. 328
1200. 329
1401. 330
1600. 331
1660. 332
1688. 333
1689. 334
1700. 335
1890. 336
2110. 337
2900. 340
2901. 341
4103. 342
5011. 343
5012. 344
5100. 345

5200. 346
5B00. 347
6000. 348
C000. 349

Using Online Manual

- Operating Environment
- Symbols Used in This Document
- Touch-enabled Device Users (Windows)
- Printing Online Manual
- Trademarks and Licenses
- Screenshots in This Manual

Symbols Used in This Document

⚠ Warning

Instructions that, if ignored, could result in death or serious personal injury caused by incorrect operation of the equipment. These must be observed for safe operation.

⚠ Caution

Instructions that, if ignored, could result in personal injury or material damage caused by incorrect operation of the equipment. These must be observed for safe operation.

Important

Instructions including important information. To avoid damage and injury or improper use of the product, be sure to read these indications.

Note

Instructions including notes for operation and additional explanations.

Basics

Instructions explaining basic operations of your product.

Note

- Icons may vary depending on your product.

Touch-enabled Device Users (Windows)

For touch actions, you need to replace "right-click" in this document with the action set on the operating system. For example, if the action is set to "press and hold" on your operating system, replace "right-click" with "press and hold."

Trademarks and Licenses

- Microsoft is a registered trademark of Microsoft Corporation.
- Windows is a trademark or registered trademark of Microsoft Corporation in the U.S. and/or other countries.
- Windows Vista is a trademark or registered trademark of Microsoft Corporation in the U.S. and/or other countries.
- Internet Explorer is a trademark or registered trademark of Microsoft Corporation in the U.S. and/or other countries.
- Mac, Mac OS, AirPort, App Store, AirPrint, the AirPrint logo, Safari, Bonjour, iPad, iPhone and iPod touch are trademarks of Apple Inc., registered in the U.S. and other countries. macOS is a trademarks of Apple Inc.
- IOS is a trademark or registered trademark of Cisco in the U.S. and other countries and is used under license.
- Google Cloud Print, Google Chrome, Chrome OS, Chromebook, Android, Google Play, Google Drive, Google Apps and Google Analytics are either registered trademarks or trademarks of Google Inc.
- Adobe, Flash, Photoshop, Photoshop Elements, Lightroom, Adobe RGB and Adobe RGB (1998) are either registered trademarks or trademarks of Adobe Systems Incorporated in the United States and/or other countries.
- Bluetooth is a trademark of Bluetooth SIG, Inc., U.S.A. and licensed to Canon Inc.
- Autodesk and AutoCAD are registered trademarks or trademarks of Autodesk, Inc., and/or its subsidiaries and/or affiliates in the USA and/or other countries.

Note

- The formal name of Windows Vista is Microsoft Windows Vista operating system.

Copyright (c) 2003-2015 Apple Inc. All rights reserved.

Redistribution and use in source and binary forms, with or without modification, are permitted provided that the following conditions are met:

1. Redistributions of source code must retain the above copyright notice, this list of conditions and the following disclaimer.
2. Redistributions in binary form must reproduce the above copyright notice, this list of conditions and the following disclaimer in the documentation and/or other materials provided with the distribution.
3. Neither the name of Apple Inc. ("Apple") nor the names of its contributors may be used to endorse or promote products derived from this software without specific prior written permission.

THIS SOFTWARE IS PROVIDED BY APPLE AND ITS CONTRIBUTORS "AS IS" AND ANY EXPRESS OR IMPLIED WARRANTIES, INCLUDING, BUT NOT LIMITED TO, THE IMPLIED WARRANTIES OF MERCHANTABILITY AND FITNESS FOR A PARTICULAR PURPOSE ARE DISCLAIMED. IN NO EVENT SHALL APPLE OR ITS CONTRIBUTORS BE LIABLE FOR ANY DIRECT, INDIRECT, INCIDENTAL, SPECIAL, EXEMPLARY, OR CONSEQUENTIAL DAMAGES (INCLUDING, BUT NOT LIMITED TO, PROCUREMENT OF SUBSTITUTE GOODS OR SERVICES; LOSS OF USE, DATA, OR PROFITS; OR BUSINESS INTERRUPTION) HOWEVER CAUSED AND ON ANY THEORY OF LIABILITY, WHETHER IN CONTRACT, STRICT LIABILITY, OR TORT (INCLUDING NEGLIGENCE OR OTHERWISE) ARISING IN ANY WAY OUT OF THE USE OF THIS SOFTWARE, EVEN IF ADVISED OF THE POSSIBILITY OF SUCH DAMAGE.

Apache License

Version 2.0, January 2004

http://www.apache.org/licenses/

TERMS AND CONDITIONS FOR USE, REPRODUCTION, AND DISTRIBUTION

1. Definitions.

   "License" shall mean the terms and conditions for use, reproduction, and distribution as defined by Sections 1 through 9 of this document.

   "Licensor" shall mean the copyright owner or entity authorized by the copyright owner that is granting the License.

   "Legal Entity" shall mean the union of the acting entity and all other entities that control, are controlled by, or are under common control with that entity. For the purposes of this definition, "control" means (i) the power, direct or indirect, to cause the direction or management of such entity, whether by contract or otherwise, or (ii) ownership of fifty percent (50%) or more of the outstanding shares, or (iii) beneficial ownership of such entity.

   "You" (or "Your") shall mean an individual or Legal Entity exercising permissions granted by this License.

   "Source" form shall mean the preferred form for making modifications, including but not limited to software source code, documentation source, and configuration files.

   "Object" form shall mean any form resulting from mechanical transformation or translation of a Source form, including but not limited to compiled object code, generated documentation, and conversions to other media types.

   "Work" shall mean the work of authorship, whether in Source or Object form, made available under the License, as indicated by a copyright notice that is included in or attached to the work (an example is provided in the Appendix below).

   "Derivative Works" shall mean any work, whether in Source or Object form, that is based on (or derived from) the Work and for which the editorial revisions, annotations, elaborations, or other modifications represent, as a whole, an original work of authorship. For the purposes of this License, Derivative Works shall not include works that remain separable from, or merely link (or bind by name) to the interfaces of, the Work and Derivative Works thereof.

   "Contribution" shall mean any work of authorship, including the original version of the Work and any modifications or additions to that Work or Derivative Works thereof, that is intentionally submitted to Licensor for inclusion in the Work by the copyright owner or by an individual or Legal Entity authorized to submit on behalf of the copyright owner. For the purposes of this definition, "submitted" means any form of electronic, verbal, or written communication sent to the Licensor or its representatives, including but not limited to communication on electronic mailing lists, source code control systems, and issue tracking systems that are managed by, or on behalf of, the Licensor for the purpose of discussing and improving the Work, but excluding communication that is conspicuously marked or otherwise designated in writing by the copyright owner as "Not a Contribution."

   "Contributor" shall mean Licensor and any individual or Legal Entity on behalf of whom a Contribution has been received by Licensor and subsequently incorporated within the Work.

2. Grant of Copyright License. Subject to the terms and conditions of this License, each Contributor hereby grants to You a perpetual, worldwide, non-exclusive, no-charge, royalty-free, irrevocable copyright license to reproduce, prepare Derivative Works of, publicly display, publicly perform, sublicense, and distribute the Work and such Derivative Works in Source or Object form.
3. Grant of Patent License. Subject to the terms and conditions of this License, each Contributor hereby grants to You a perpetual, worldwide, non-exclusive, no-charge, royalty-free, irrevocable (except as stated in this section) patent license to make, have made, use, offer to sell, sell, import, and otherwise transfer the Work, where such license applies only to those patent claims licensable by such Contributor that are necessarily infringed by their Contribution(s) alone or by combination of their Contribution(s) with the Work to which such Contribution(s) was submitted. If You institute patent litigation against any entity (including a cross-claim or counterclaim in a lawsuit) alleging that the Work or a Contribution incorporated within the Work constitutes direct or contributory patent infringement, then any patent licenses granted to You under this License for that Work shall terminate as of the date such litigation is filed.
4. Redistribution. You may reproduce and distribute copies of the Work or Derivative Works thereof in any medium, with or without modifications, and in Source or Object form, provided that You meet the following conditions:

    1. You must give any other recipients of the Work or Derivative Works a copy of this License; and
    2. You must cause any modified files to carry prominent notices stating that You changed the files; and
    3. You must retain, in the Source form of any Derivative Works that You distribute, all copyright, patent, trademark, and attribution notices from the Source form of the Work, excluding those notices that do not pertain to any part of the Derivative Works; and
    4. If the Work includes a "NOTICE" text file as part of its distribution, then any Derivative Works that You distribute must include a readable copy of the attribution notices contained within such NOTICE file, excluding those notices that do not pertain to any part of the Derivative Works, in at least one of the following places: within a NOTICE text file distributed as part of the Derivative Works; within the Source form or documentation, if provided along with the Derivative Works; or, within a display generated by the Derivative Works, if and wherever such third-party notices normally appear. The contents of the NOTICE file are for informational purposes only and do not modify the License. You may add Your own attribution notices within Derivative Works that You distribute, alongside or as an addendum to the NOTICE text from the Work, provided that such additional attribution notices cannot be construed as modifying the License.

    You may add Your own copyright statement to Your modifications and may provide additional or different license terms and conditions for use, reproduction, or distribution of Your modifications, or for any such Derivative Works as a whole, provided Your use, reproduction, and distribution of the Work otherwise complies with the conditions stated in this License.

5. Submission of Contributions. Unless You explicitly state otherwise, any Contribution intentionally submitted for inclusion in the Work by You to the Licensor shall be under the terms and conditions of this License, without any additional terms or conditions. Notwithstanding the above, nothing herein shall supersede or modify the terms of any separate license agreement you may have executed with Licensor regarding such Contributions.
6. Trademarks. This License does not grant permission to use the trade names, trademarks, service marks, or product names of the Licensor, except as required for reasonable and customary use in describing the origin of the Work and reproducing the content of the NOTICE file.

7. Disclaimer of Warranty. Unless required by applicable law or agreed to in writing, Licensor provides the Work (and each Contributor provides its Contributions) on an "AS IS" BASIS, WITHOUT WARRANTIES OR CONDITIONS OF ANY KIND, either express or implied, including, without limitation, any warranties or conditions of TITLE, NON-INFRINGEMENT, MERCHANTABILITY, or FITNESS FOR A PARTICULAR PURPOSE. You are solely responsible for determining the appropriateness of using or redistributing the Work and assume any risks associated with Your exercise of permissions under this License.
8. Limitation of Liability. In no event and under no legal theory, whether in tort (including negligence), contract, or otherwise, unless required by applicable law (such as deliberate and grossly negligent acts) or agreed to in writing, shall any Contributor be liable to You for damages, including any direct, indirect, special, incidental, or consequential damages of any character arising as a result of this License or out of the use or inability to use the Work (including but not limited to damages for loss of goodwill, work stoppage, computer failure or malfunction, or any and all other commercial damages or losses), even if such Contributor has been advised of the possibility of such damages.
9. Accepting Warranty or Additional Liability. While redistributing the Work or Derivative Works thereof, You may choose to offer, and charge a fee for, acceptance of support, warranty, indemnity, or other liability obligations and/or rights consistent with this License. However, in accepting such obligations, You may act only on Your own behalf and on Your sole responsibility, not on behalf of any other Contributor, and only if You agree to indemnify, defend, and hold each Contributor harmless for any liability incurred by, or claims asserted against, such Contributor by reason of your accepting any such warranty or additional liability.
END OF TERMS AND CONDITIONS

---- Part 1: CMU/UCD copyright notice: (BSD like) -----

Copyright 1989, 1991, 1992 by Carnegie Mellon University

Derivative Work - 1996, 1998-2000

Copyright 1996, 1998-2000 The Regents of the University of California

All Rights Reserved

Permission to use, copy, modify and distribute this software and its documentation for any purpose and without fee is hereby granted, provided that the above copyright notice appears in all copies and that both that copyright notice and this permission notice appear in supporting documentation, and that the name of CMU and The Regents of the University of California not be used in advertising or publicity pertaining to distribution of the software without specific written permission.

CMU AND THE REGENTS OF THE UNIVERSITY OF CALIFORNIA DISCLAIM ALL WARRANTIES WITH REGARD TO THIS SOFTWARE, INCLUDING ALL IMPLIED WARRANTIES OF MERCHANTABILITY AND FITNESS. IN NO EVENT SHALL CMU OR THE REGENTS OF THE UNIVERSITY OF CALIFORNIA BE LIABLE FOR ANY SPECIAL, INDIRECT OR CONSEQUENTIAL DAMAGES OR ANY DAMAGES WHATSOEVER RESULTING FROM THE LOSS OF USE, DATA OR PROFITS, WHETHER IN AN ACTION OF CONTRACT, NEGLIGENCE OR OTHER TORTIOUS ACTION, ARISING OUT OF OR IN CONNECTION WITH THE USE OR PERFORMANCE OF THIS SOFTWARE.

---- Part 2: Networks Associates Technology, Inc copyright notice (BSD) -----

Copyright (c) 2001-2003, Networks Associates Technology, Inc

All rights reserved.

Redistribution and use in source and binary forms, with or without modification, are permitted provided that the following conditions are met:

* Redistributions of source code must retain the above copyright notice, this list of conditions and the following disclaimer.
* Redistributions in binary form must reproduce the above copyright notice, this list of conditions and the following disclaimer in the documentation and/or other materials provided with the distribution.
* Neither the name of the Networks Associates Technology, Inc nor the names of its contributors may be used to endorse or promote products derived from this software without specific prior written permission.

THIS SOFTWARE IS PROVIDED BY THE COPYRIGHT HOLDERS AND CONTRIBUTORS ``AS IS'' AND ANY EXPRESS OR IMPLIED WARRANTIES, INCLUDING, BUT NOT LIMITED TO, THE IMPLIED WARRANTIES OF MERCHANTABILITY AND FITNESS FOR A PARTICULAR PURPOSE ARE DISCLAIMED. IN NO EVENT SHALL THE COPYRIGHT HOLDERS OR CONTRIBUTORS BE LIABLE FOR ANY DIRECT, INDIRECT, INCIDENTAL, SPECIAL, EXEMPLARY, OR CONSEQUENTIAL DAMAGES (INCLUDING, BUT NOT LIMITED TO, PROCUREMENT OF SUBSTITUTE GOODS OR SERVICES; LOSS OF USE, DATA, OR PROFITS; OR BUSINESS INTERRUPTION) HOWEVER CAUSED AND ON ANY THEORY OF LIABILITY, WHETHER IN CONTRACT, STRICT LIABILITY, OR TORT (INCLUDING NEGLIGENCE OR OTHERWISE) ARISING IN ANY WAY OUT OF THE USE OF THIS SOFTWARE, EVEN IF ADVISED OF THE POSSIBILITY OF SUCH DAMAGE.

---- Part 3: Cambridge Broadband Ltd. copyright notice (BSD) -----

Portions of this code are copyright (c) 2001-2003, Cambridge Broadband Ltd.

All rights reserved.

Redistribution and use in source and binary forms, with or without modification, are permitted provided that the following conditions are met:

* Redistributions of source code must retain the above copyright notice, this list of conditions and the following disclaimer.
* Redistributions in binary form must reproduce the above copyright notice, this list of conditions and the following disclaimer in the documentation and/or other materials provided with the distribution.
* The name of Cambridge Broadband Ltd. may not be used to endorse or promote products derived from this software without specific prior written permission.

THIS SOFTWARE IS PROVIDED BY THE COPYRIGHT HOLDER ``AS IS'' AND ANY EXPRESS OR IMPLIED WARRANTIES, INCLUDING, BUT NOT LIMITED TO, THE IMPLIED WARRANTIES OF MERCHANTABILITY AND FITNESS FOR A PARTICULAR PURPOSE ARE DISCLAIMED. IN NO EVENT SHALL THE COPYRIGHT HOLDER BE LIABLE FOR ANY DIRECT, INDIRECT, INCIDENTAL, SPECIAL, EXEMPLARY, OR CONSEQUENTIAL DAMAGES (INCLUDING, BUT NOT LIMITED TO, PROCUREMENT OF SUBSTITUTE GOODS OR SERVICES; LOSS OF USE, DATA, OR PROFITS; OR BUSINESS INTERRUPTION) HOWEVER CAUSED AND ON ANY THEORY OF LIABILITY, WHETHER IN CONTRACT, STRICT LIABILITY, OR TORT (INCLUDING NEGLIGENCE OR OTHERWISE) ARISING IN ANY WAY OUT OF THE USE OF THIS SOFTWARE, EVEN IF ADVISED OF THE POSSIBILITY OF SUCH DAMAGE.

---- Part 4: Sun Microsystems, Inc. copyright notice (BSD) -----

Copyright c 2003 Sun Microsystems, Inc., 4150 Network Circle, Santa Clara, California 95054, U.S.A. All rights reserved.

Use is subject to license terms below.

This distribution may include materials developed by third parties.

Sun, Sun Microsystems, the Sun logo and Solaris are trademarks or registered trademarks of Sun Microsystems, Inc. in the U.S. and other countries.

Redistribution and use in source and binary forms, with or without modification, are permitted provided that the following conditions are met:

* Redistributions of source code must retain the above copyright notice, this list of conditions and the following disclaimer.
* Redistributions in binary form must reproduce the above copyright notice, this list of conditions and the following disclaimer in the documentation and/or other materials provided with the distribution.
* Neither the name of the Sun Microsystems, Inc. nor the names of its contributors may be used to endorse or promote products derived from this software without specific prior written permission.

THIS SOFTWARE IS PROVIDED BY THE COPYRIGHT HOLDERS AND CONTRIBUTORS ``AS IS'' AND ANY EXPRESS OR IMPLIED WARRANTIES, INCLUDING, BUT NOT LIMITED TO, THE IMPLIED WARRANTIES OF MERCHANTABILITY AND FITNESS FOR A PARTICULAR PURPOSE ARE DISCLAIMED. IN NO EVENT SHALL THE COPYRIGHT HOLDERS OR CONTRIBUTORS BE LIABLE FOR ANY DIRECT, INDIRECT, INCIDENTAL, SPECIAL, EXEMPLARY, OR CONSEQUENTIAL DAMAGES (INCLUDING, BUT NOT LIMITED TO, PROCUREMENT OF SUBSTITUTE GOODS OR SERVICES; LOSS OF USE, DATA, OR PROFITS; OR BUSINESS INTERRUPTION) HOWEVER CAUSED AND ON ANY THEORY OF LIABILITY, WHETHER IN CONTRACT, STRICT LIABILITY, OR TORT (INCLUDING NEGLIGENCE OR OTHERWISE) ARISING IN ANY WAY OUT OF THE USE OF THIS SOFTWARE, EVEN IF ADVISED OF THE POSSIBILITY OF SUCH DAMAGE.

---- Part 5: Sparta, Inc copyright notice (BSD) -----

Copyright (c) 2003-2012, Sparta, Inc

All rights reserved.

Redistribution and use in source and binary forms, with or without modification, are permitted provided that the following conditions are met:

* Redistributions of source code must retain the above copyright notice, this list of conditions and the following disclaimer.
* Redistributions in binary form must reproduce the above copyright notice, this list of conditions and the following disclaimer in the documentation and/or other materials provided with the distribution.
* Neither the name of Sparta, Inc nor the names of its contributors may be used to endorse or promote products derived from this software without specific prior written permission.

THIS SOFTWARE IS PROVIDED BY THE COPYRIGHT HOLDERS AND CONTRIBUTORS ``AS IS'' AND ANY EXPRESS OR IMPLIED WARRANTIES, INCLUDING, BUT NOT LIMITED TO, THE IMPLIED WARRANTIES OF MERCHANTABILITY AND FITNESS FOR A PARTICULAR PURPOSE ARE DISCLAIMED. IN NO EVENT SHALL THE COPYRIGHT HOLDERS OR CONTRIBUTORS BE LIABLE FOR ANY DIRECT, INDIRECT, INCIDENTAL, SPECIAL, EXEMPLARY, OR CONSEQUENTIAL DAMAGES (INCLUDING, BUT NOT LIMITED TO, PROCUREMENT OF SUBSTITUTE GOODS OR SERVICES; LOSS OF USE, DATA, OR PROFITS; OR BUSINESS INTERRUPTION) HOWEVER CAUSED AND ON ANY THEORY OF LIABILITY, WHETHER IN CONTRACT, STRICT LIABILITY, OR

TORT (INCLUDING NEGLIGENCE OR OTHERWISE) ARISING IN ANY WAY OUT OF THE USE OF THIS SOFTWARE, EVEN IF ADVISED OF THE POSSIBILITY OF SUCH DAMAGE.

---- Part 6: Cisco/BUPTNIC copyright notice (BSD) -----

Copyright (c) 2004, Cisco, Inc and Information Network Center of Beijing University of Posts and Telecommunications.

All rights reserved.

Redistribution and use in source and binary forms, with or without modification, are permitted provided that the following conditions are met:

* Redistributions of source code must retain the above copyright notice, this list of conditions and the following disclaimer.
* Redistributions in binary form must reproduce the above copyright notice, this list of conditions and the following disclaimer in the documentation and/or other materials provided with the distribution.
* Neither the name of Cisco, Inc, Beijing University of Posts and Telecommunications, nor the names of their contributors may be used to endorse or promote products derived from this software without specific prior written permission.

THIS SOFTWARE IS PROVIDED BY THE COPYRIGHT HOLDERS AND CONTRIBUTORS ``AS IS'' AND ANY EXPRESS OR IMPLIED WARRANTIES, INCLUDING, BUT NOT LIMITED TO, THE IMPLIED WARRANTIES OF MERCHANTABILITY AND FITNESS FOR A PARTICULAR PURPOSE ARE DISCLAIMED. IN NO EVENT SHALL THE COPYRIGHT HOLDERS OR CONTRIBUTORS BE LIABLE FOR ANY DIRECT, INDIRECT, INCIDENTAL, SPECIAL, EXEMPLARY, OR CONSEQUENTIAL DAMAGES (INCLUDING, BUT NOT LIMITED TO, PROCUREMENT OF SUBSTITUTE GOODS OR SERVICES; LOSS OF USE, DATA, OR PROFITS; OR BUSINESS INTERRUPTION) HOWEVER CAUSED AND ON ANY THEORY OF LIABILITY, WHETHER IN CONTRACT, STRICT LIABILITY, OR TORT (INCLUDING NEGLIGENCE OR OTHERWISE) ARISING IN ANY WAY OUT OF THE USE OF THIS SOFTWARE, EVEN IF ADVISED OF THE POSSIBILITY OF SUCH DAMAGE.

---- Part 7: Fabasoft R&D Software GmbH & Co KG copyright notice (BSD) -----

Copyright (c) Fabasoft R&D Software GmbH & Co KG, 2003 oss@fabasoft.com

Author: Bernhard Penz <bernhard.penz@fabasoft.com>

Redistribution and use in source and binary forms, with or without modification, are permitted provided that the following conditions are met:

* Redistributions of source code must retain the above copyright notice, this list of conditions and the following disclaimer.
* Redistributions in binary form must reproduce the above copyright notice, this list of conditions and the following disclaimer in the documentation and/or other materials provided with the distribution.
* The name of Fabasoft R&D Software GmbH & Co KG or any of its subsidiaries, brand or product names may not be used to endorse or promote products derived from this software without specific prior written permission.

THIS SOFTWARE IS PROVIDED BY THE COPYRIGHT HOLDER ``AS IS'' AND ANY EXPRESS OR IMPLIED WARRANTIES, INCLUDING, BUT NOT LIMITED TO, THE IMPLIED WARRANTIES OF MERCHANTABILITY AND FITNESS FOR A PARTICULAR PURPOSE ARE DISCLAIMED. IN NO EVENT SHALL THE COPYRIGHT HOLDER BE LIABLE FOR ANY DIRECT, INDIRECT, INCIDENTAL,

SPECIAL, EXEMPLARY, OR CONSEQUENTIAL DAMAGES (INCLUDING, BUT NOT LIMITED TO, PROCUREMENT OF SUBSTITUTE GOODS OR SERVICES; LOSS OF USE, DATA, OR PROFITS; OR BUSINESS INTERRUPTION) HOWEVER CAUSED AND ON ANY THEORY OF LIABILITY, WHETHER IN CONTRACT, STRICT LIABILITY, OR TORT (INCLUDING NEGLIGENCE OR OTHERWISE) ARISING IN ANY WAY OUT OF THE USE OF THIS SOFTWARE, EVEN IF ADVISED OF THE POSSIBILITY OF SUCH DAMAGE.

---- Part 8: Apple Inc. copyright notice (BSD) -----

Copyright (c) 2007 Apple Inc. All rights reserved.

Redistribution and use in source and binary forms, with or without modification, are permitted provided that the following conditions are met:

1. Redistributions of source code must retain the above copyright notice, this list of conditions and the following disclaimer.
2. Redistributions in binary form must reproduce the above copyright notice, this list of conditions and the following disclaimer in the documentation and/or other materials provided with the distribution.
3. Neither the name of Apple Inc. ("Apple") nor the names of its contributors may be used to endorse or promote products derived from this software without specific prior written permission.

THIS SOFTWARE IS PROVIDED BY APPLE AND ITS CONTRIBUTORS "AS IS" AND ANY EXPRESS OR IMPLIED WARRANTIES, INCLUDING, BUT NOT LIMITED TO, THE IMPLIED WARRANTIES OF MERCHANTABILITY AND FITNESS FOR A PARTICULAR PURPOSE ARE DISCLAIMED. IN NO EVENT SHALL APPLE OR ITS CONTRIBUTORS BE LIABLE FOR ANY DIRECT, INDIRECT, INCIDENTAL, SPECIAL, EXEMPLARY, OR CONSEQUENTIAL DAMAGES (INCLUDING, BUT NOT LIMITED TO, PROCUREMENT OF SUBSTITUTE GOODS OR SERVICES; LOSS OF USE, DATA, OR PROFITS; OR BUSINESS INTERRUPTION) HOWEVER CAUSED AND ON ANY THEORY OF LIABILITY, WHETHER IN CONTRACT, STRICT LIABILITY, OR TORT (INCLUDING NEGLIGENCE OR OTHERWISE) ARISING IN ANY WAY OUT OF THE USE OF THIS SOFTWARE, EVEN IF ADVISED OF THE POSSIBILITY OF SUCH DAMAGE.

---- Part 9: ScienceLogic, LLC copyright notice (BSD) -----

Copyright (c) 2009, ScienceLogic, LLC

All rights reserved.

Redistribution and use in source and binary forms, with or without modification, are permitted provided that the following conditions are met:

* Redistributions of source code must retain the above copyright notice, this list of conditions and the following disclaimer.
* Redistributions in binary form must reproduce the above copyright notice, this list of conditions and the following disclaimer in the documentation and/or other materials provided with the distribution.
* Neither the name of ScienceLogic, LLC nor the names of its contributors may be used to endorse or promote products derived from this software without specific prior written permission.

THIS SOFTWARE IS PROVIDED BY THE COPYRIGHT HOLDERS AND CONTRIBUTORS "AS IS" AND ANY EXPRESS OR IMPLIED WARRANTIES, INCLUDING, BUT NOT LIMITED TO, THE IMPLIED WARRANTIES OF MERCHANTABILITY AND FITNESS FOR A PARTICULAR PURPOSE ARE DISCLAIMED. IN NO EVENT SHALL THE COPYRIGHT HOLDERS OR CONTRIBUTORS BE LIABLE

FOR ANY DIRECT, INDIRECT, INCIDENTAL, SPECIAL, EXEMPLARY, OR CONSEQUENTIAL DAMAGES (INCLUDING, BUT NOT LIMITED TO, PROCUREMENT OF SUBSTITUTE GOODS OR SERVICES; LOSS OF USE, DATA, OR PROFITS; OR BUSINESS INTERRUPTION) HOWEVER CAUSED AND ON ANY THEORY OF LIABILITY, WHETHER IN CONTRACT, STRICT LIABILITY, OR TORT (INCLUDING NEGLIGENCE OR OTHERWISE) ARISING IN ANY WAY OUT OF THE USE OF THIS SOFTWARE, EVEN IF ADVISED OF THE POSSIBILITY OF SUCH DAMAGE.

LEADTOOLS

Copyright (C) 1991-2009 LEAD Technologies, Inc.

CMap Resources

Copyright 1990-2009 Adobe Systems Incorporated.
All rights reserved.

Copyright 1990-2010 Adobe Systems Incorporated.
All rights reserved.

Redistribution and use in source and binary forms, with or without modification, are permitted provided that the following conditions are met:

Redistributions of source code must retain the above copyright notice, this list of conditions and the following disclaimer.

Redistributions in binary form must reproduce the above copyright notice, this list of conditions and the following disclaimer in the documentation and/or other materials provided with the distribution.

Neither the name of Adobe Systems Incorporated nor the names of its contributors may be used to endorse or promote products derived from this software without specific prior written permission.

THIS SOFTWARE IS PROVIDED BY THE COPYRIGHT HOLDERS AND CONTRIBUTORS "AS IS" AND ANY EXPRESS OR IMPLIED WARRANTIES, INCLUDING, BUT NOT LIMITED TO, THE IMPLIED WARRANTIES OF MERCHANTABILITY AND FITNESS FOR A PARTICULAR PURPOSE ARE DISCLAIMED. IN NO EVENT SHALL THE COPYRIGHT HOLDER OR CONTRIBUTORS BE LIABLE FOR ANY DIRECT, INDIRECT, INCIDENTAL, SPECIAL, EXEMPLARY, OR CONSEQUENTIAL DAMAGES (INCLUDING, BUT NOT LIMITED TO, PROCUREMENT OF SUBSTITUTE GOODS OR SERVICES; LOSS OF USE, DATA, OR PROFITS; OR BUSINESS INTERRUPTION) HOWEVER CAUSED AND ON ANY THEORY OF LIABILITY, WHETHER IN CONTRACT, STRICT LIABILITY, OR TORT (INCLUDING NEGLIGENCE OR OTHERWISE) ARISING IN ANY WAY OUT OF THE USE OF THIS SOFTWARE, EVEN IF ADVISED OF THE POSSIBILITY OF SUCH DAMAGE.

MIT License

Copyright (c) 1998, 1999, 2000 Thai Open Source Software Center Ltd

Permission is hereby granted, free of charge, to any person obtaining a copy of this software and associated documentation files (the "Software"), to deal in the Software without restriction, including without limitation the rights to use, copy, modify, merge, publish, distribute, sublicense, and/or sell copies of the Software, and to permit persons to whom the Software is furnished to do so, subject to the following conditions:

The above copyright notice and this permission notice shall be included in all copies or substantial portions of the Software.

THE SOFTWARE IS PROVIDED "AS IS", WITHOUT WARRANTY OF ANY KIND, EXPRESS OR IMPLIED, INCLUDING BUT NOT LIMITED TO THE WARRANTIES OF MERCHANTABILITY, FITNESS FOR A PARTICULAR PURPOSE AND NONINFRINGEMENT. IN NO EVENT SHALL THE AUTHORS OR COPYRIGHT HOLDERS BE LIABLE FOR ANY CLAIM, DAMAGES OR OTHER LIABILITY, WHETHER IN AN ACTION OF CONTRACT, TORT OR OTHERWISE, ARISING FROM, OUT OF OR IN CONNECTION WITH THE SOFTWARE OR THE USE OR OTHER DEALINGS IN THE SOFTWARE.

Written by Joel Sherrill <joel@OARcorp.com>.

COPYRIGHT (c) 1989-2000.

On-Line Applications Research Corporation (OAR).

Permission to use, copy, modify, and distribute this software for any purpose without fee is hereby granted, provided that this entire notice is included in all copies of any software which is or includes a copy or modification of this software.

THIS SOFTWARE IS BEING PROVIDED "AS IS", WITHOUT ANY EXPRESS OR IMPLIED WARRANTY. IN PARTICULAR, THE AUTHOR MAKES NO REPRESENTATION OR WARRANTY OF ANY KIND CONCERNING THE MERCHANTABILITY OF THIS SOFTWARE OR ITS FITNESS FOR ANY PARTICULAR PURPOSE.

(1) Red Hat Incorporated

Copyright (c) 1994-2009 Red Hat, Inc. All rights reserved.

This copyrighted material is made available to anyone wishing to use, modify, copy, or redistribute it subject to the terms and conditions of the BSD License. This program is distributed in the hope that it will be useful, but WITHOUT ANY WARRANTY expressed or implied, including the implied warranties of MERCHANTABILITY or FITNESS FOR A PARTICULAR PURPOSE. A copy of this license is available at http://www.opensource.org/licenses. Any Red Hat trademarks that are incorporated in the source code or documentation are not subject to the BSD License and may only be used or replicated with the express permission of Red Hat, Inc.

(2) University of California, Berkeley

Copyright (c) 1981-2000 The Regents of the University of California.

All rights reserved.

Redistribution and use in source and binary forms, with or without modification, are permitted provided that the following conditions are met:

* Redistributions of source code must retain the above copyright notice, this list of conditions and the following disclaimer.
* Redistributions in binary form must reproduce the above copyright notice, this list of conditions and the following disclaimer in the documentation and/or other materials provided with the distribution.
* Neither the name of the University nor the names of its contributors may be used to endorse or promote products derived from this software without specific prior written permission.

THIS SOFTWARE IS PROVIDED BY THE COPYRIGHT HOLDERS AND CONTRIBUTORS "AS IS" AND ANY EXPRESS OR IMPLIED WARRANTIES, INCLUDING, BUT NOT LIMITED TO, THE IMPLIED WARRANTIES OF MERCHANTABILITY AND FITNESS FOR A PARTICULAR PURPOSE ARE DISCLAIMED. IN NO EVENT SHALL THE COPYRIGHT OWNER OR CONTRIBUTORS BE LIABLE FOR ANY DIRECT, INDIRECT, INCIDENTAL, SPECIAL, EXEMPLARY, OR CONSEQUENTIAL DAMAGES (INCLUDING, BUT NOT LIMITED TO, PROCUREMENT OF SUBSTITUTE GOODS OR SERVICES; LOSS OF USE, DATA, OR PROFITS; OR BUSINESS INTERRUPTION) HOWEVER CAUSED AND ON ANY THEORY OF LIABILITY, WHETHER IN CONTRACT, STRICT LIABILITY, OR TORT (INCLUDING NEGLIGENCE OR OTHERWISE) ARISING IN ANY WAY OUT OF THE USE OF THIS SOFTWARE, EVEN IF ADVISED OF THE POSSIBILITY OF SUCH DAMAGE.

The following applies only to products supporting Wi-Fi.

(c) 2009-2013 by Jeff Mott. All rights reserved.

Redistribution and use in source and binary forms, with or without modification, are permitted provided that the following conditions are met:

* Redistributions of source code must retain the above copyright notice, this list of conditions, and the following disclaimer.
* Redistributions in binary form must reproduce the above copyright notice, this list of conditions, and the following disclaimer in the documentation or other materials provided with the distribution.
* Neither the name CryptoJS nor the names of its contributors may be used to endorse or promote products derived from this software without specific prior written permission.

THIS SOFTWARE IS PROVIDED BY THE COPYRIGHT HOLDERS AND CONTRIBUTORS "AS IS," AND ANY EXPRESS OR IMPLIED WARRANTIES, INCLUDING, BUT NOT LIMITED TO, THE IMPLIED WARRANTIES OF MERCHANTABILITY AND FITNESS FOR A PARTICULAR PURPOSE, ARE DISCLAIMED. IN NO EVENT SHALL THE COPYRIGHT HOLDER OR CONTRIBUTORS BE LIABLE FOR ANY DIRECT, INDIRECT, INCIDENTAL, SPECIAL, EXEMPLARY, OR CONSEQUENTIAL DAMAGES (INCLUDING, BUT NOT LIMITED TO, PROCUREMENT OF SUBSTITUTE GOODS OR SERVICES; LOSS OF USE, DATA, OR PROFITS; OR BUSINESS INTERRUPTION) HOWEVER CAUSED AND ON ANY THEORY OF LIABILITY, WHETHER IN CONTRACT, STRICT LIABILITY, OR TORT (INCLUDING NEGLIGENCE OR OTHERWISE) ARISING IN ANY WAY OUT OF THE USE OF THIS SOFTWARE, EVEN IF ADVISED OF THE POSSIBILITY OF SUCH DAMAGE.

Basic Operation

- Printing Photos from a Computer
- Printing Photos from a Smartphone/Tablet
- Copying

Printing Photos from a Computer

This section describes how to print photos with My Image Garden.

1. Open the rear tray cover (A) and then pull up the paper support (B).

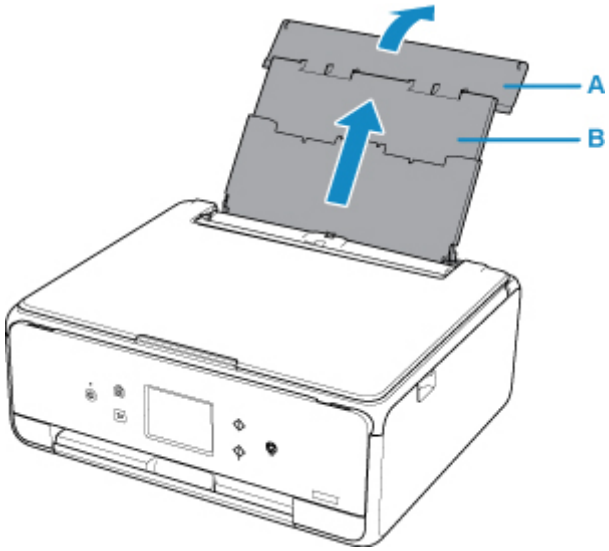

2. Open the feed slot cover (C).

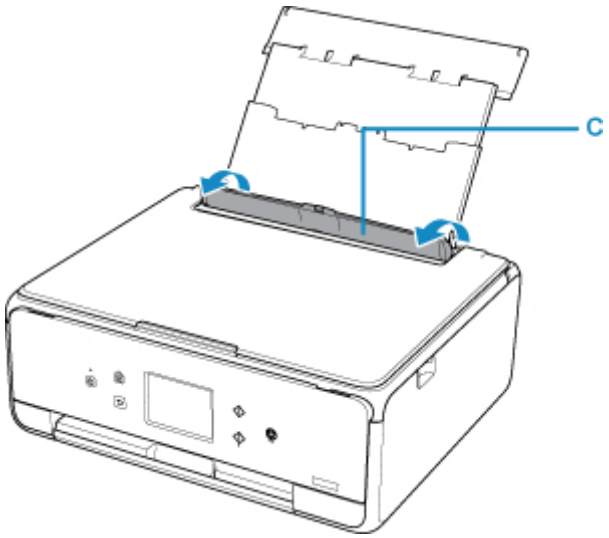

3. Load paper vertically WITH THE PRINT SIDE FACING UP.

4. Align the paper guides (D) with the paper width.

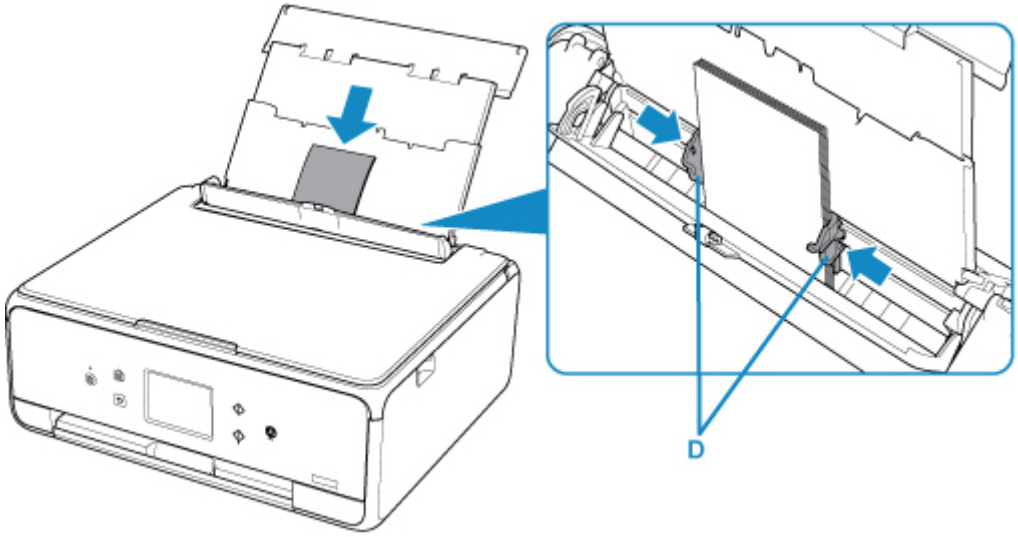

5. Close the feed slot cover (E) gently.

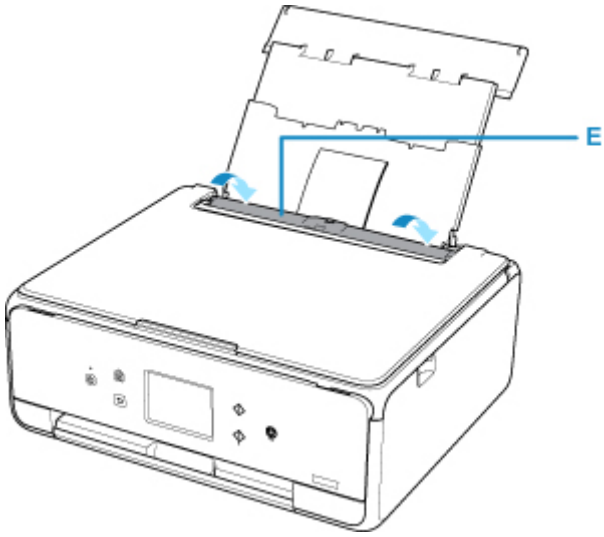

After closing the feed slot cover, the paper information registration screen for the rear tray is displayed on the touch screen.

6. Select the size and type of the loaded paper in the rear tray at **Page size** and **Type**, and then select **Register**.

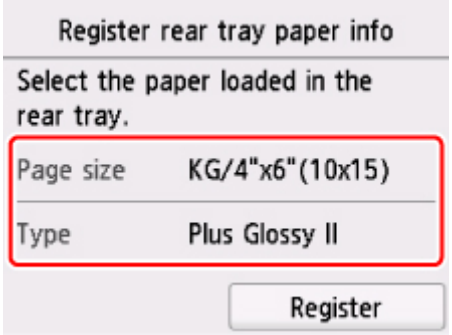

7. Open the operation panel (F), pull out the paper output tray (G) and paper output support (H), and open the output tray extension (I).

   Be sure to open the operation panel before printing. If the operation panel is close, the printer does not start printing.

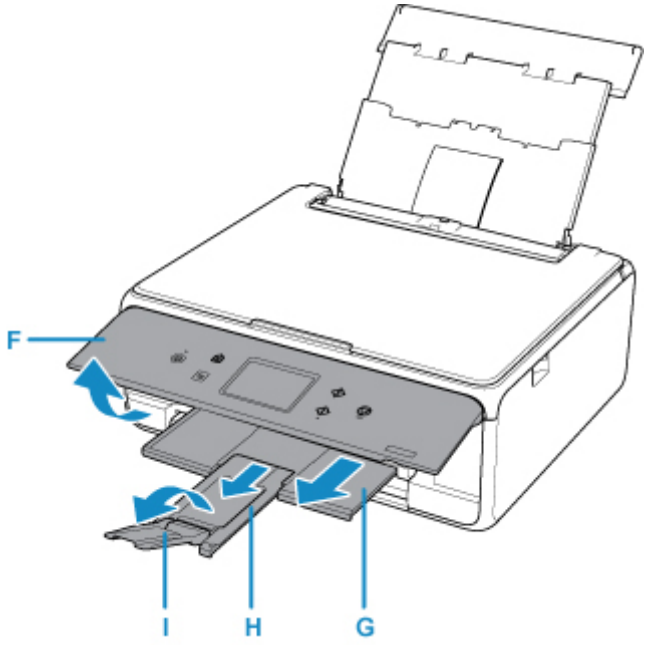

8. Click the My Image Garden icon (J) in Quick Menu.

   The **Guide Menu** screen is displayed.

Note

- The number and types of icons displayed vary depending on your region, the registered printer/scanner and the installed applications.

9. Click the **Photo Print** icon (K).

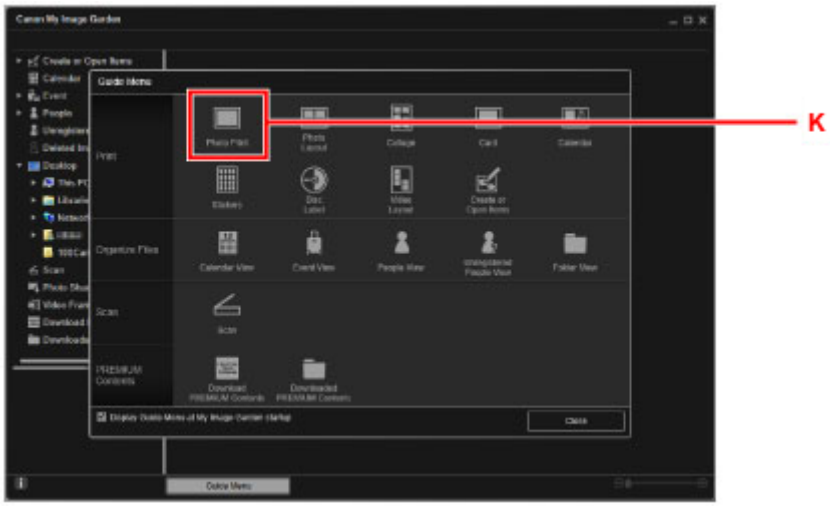

10. Click the folder (L) with photos you want to print.

11. Click the photos (M) you want to print.

    For Windows:

    To select two or more photos at a time, click photos while pressing the Ctrl key.

    For Mac OS:

    To select two or more photos at a time, click photos while pressing the command key.

12. Click **Print** (N).

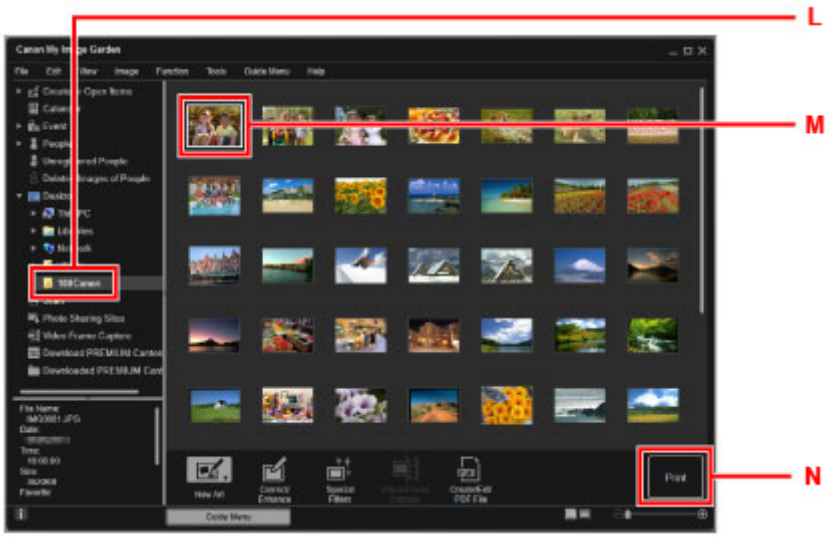

13. Specify the number of copies, etc.

    For Windows:

    Specify the number of copies, your printer name, media type, etc.

For Mac OS:

Specify the number of copies.

14. Start printing.

For Windows:

Click **Print**.

For Mac OS:

Click **Print**.

When the Print dialog starts, specify your printer name, paper size, etc., then click **Print**.

Note

- My Image Garden lets you use images on your computer, such as photos taken with a digital camera, in a number of ways.
  - For Windows:
    - My Image Garden Guide
  - For Mac OS:
    - My Image Garden Guide
- If your printer is not displayed on Mac OS, the AirPrint setting in My Image Garden may not be correct. For details on how to set correctly, refer to a heading for AirPrint-enabled Printer on below page.
  - Making Settings According to Printer Status

Printing Photos from a Smartphone/Tablet

This section describes how to print photos with Canon PRINT Inkjet/SELPHY.

For details on how to download Canon PRINT Inkjet/SELPHY, see below.

■ Print Easily from a Smartphone or Tablet with Canon PRINT Inkjet/SELPHY

1. Open the rear tray cover (A) and then pull up the paper support (B).

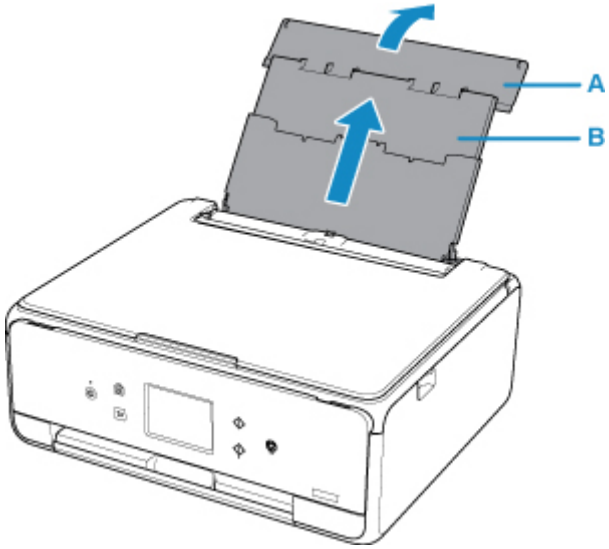

2. Open the feed slot cover (C).

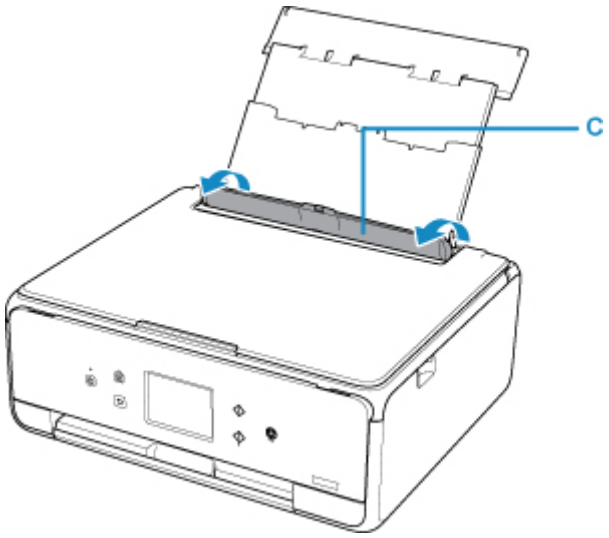

3. Load paper vertically WITH THE PRINT SIDE FACING UP.

4. Align the paper guides (D) with the paper width.

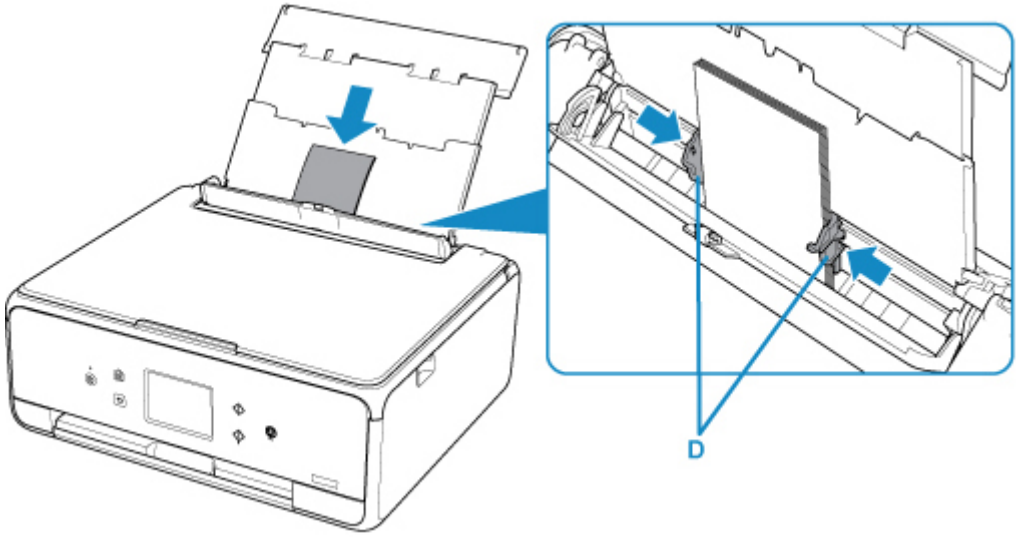

5. Close the feed slot cover (E) gently.

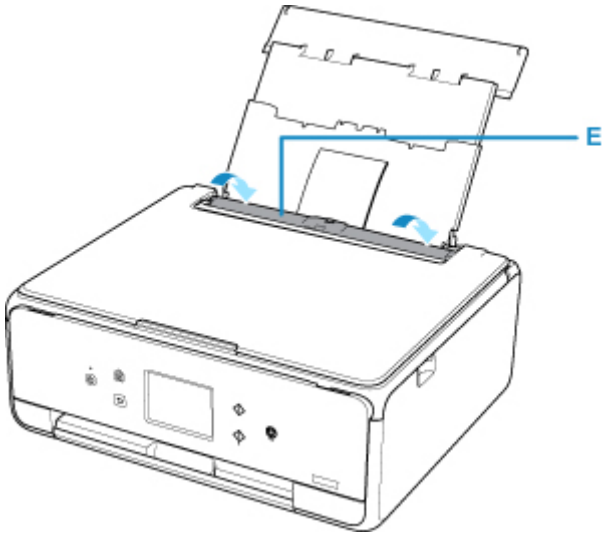

After closing the feed slot cover, the paper information registration screen for the rear tray is displayed on the LCD.

6. Select the size and type of the loaded paper in the rear tray at **Page size** and **Type**, and then select **Register**.

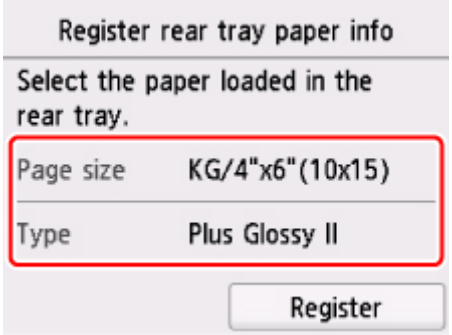

7. Open the operation panel (F), pull out the paper output tray (G) and paper output support (H), and open the output tray extension (I).

   Be sure to open the operation panel before printing. If the operation panel is close, the printer does not start printing.

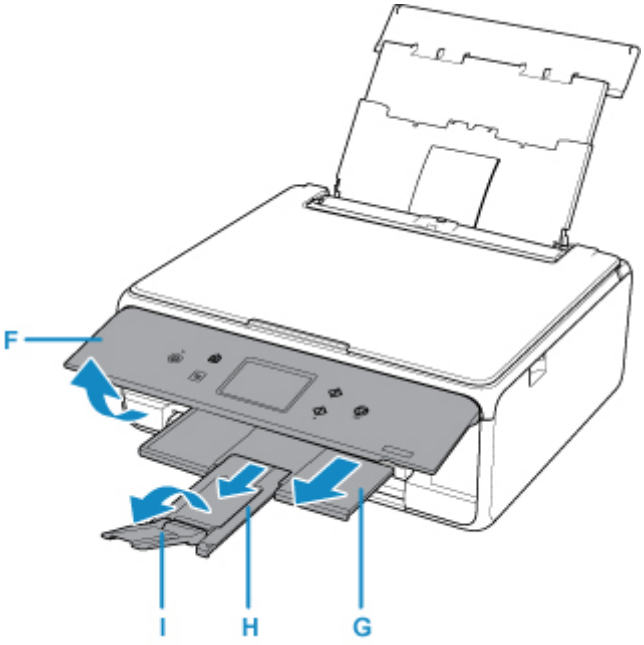

8. Start (Canon PRINT Inkjet/SELPHY) from your smartphone/tablet.

9. Select **Photo Print** on Canon PRINT Inkjet/SELPHY.

   The list of photos saved on your smartphone/tablet is displayed.

10. Select a photo.

    You can also select multiple photos at once.

11. Specify the number of copies, paper size, etc.

12. Select **Print**.

Copying

This section describes how to load originals and copy them to plain paper loaded in the cassette.

1. Pull out the cassette (A) from the printer.

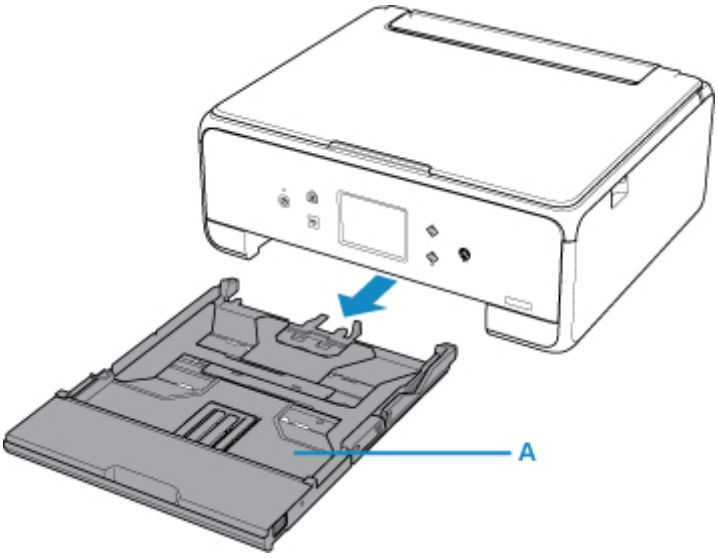

2. Remove the cassette cover (B).

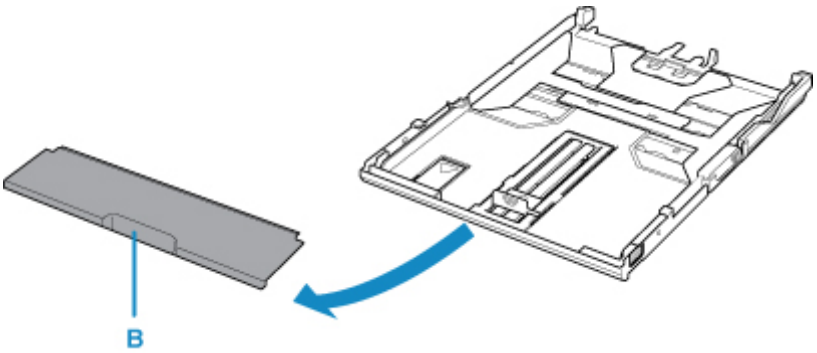

3. Load the paper stack WITH THE PRINT SIDE FACING DOWN.

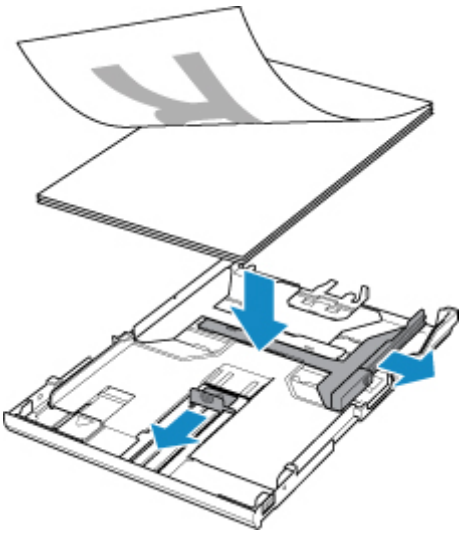

4. Align the paper guides (C) with the paper length and width.

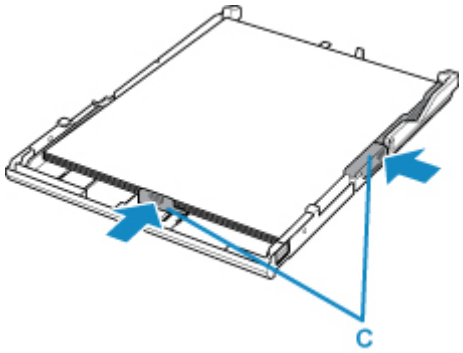

5. Mount the cassette cover, and then insert the cassette into the printer.

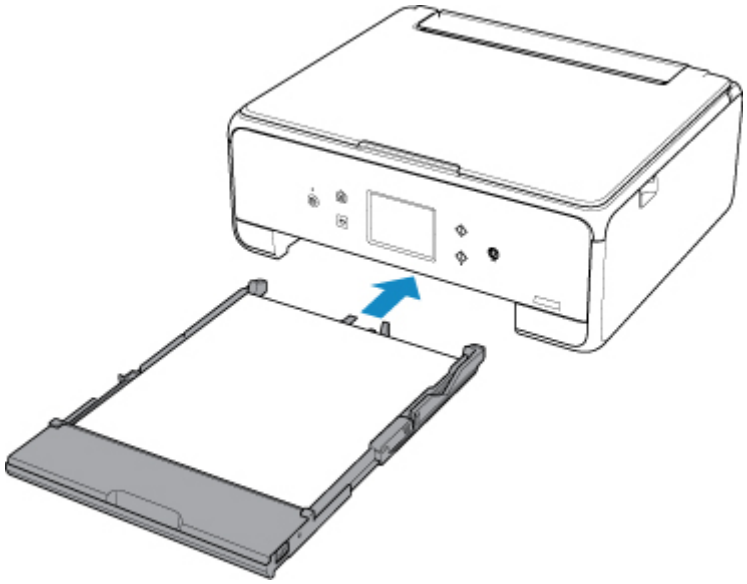

After inserting the cassette into the printer, the paper information registration screen for the cassette is displayed on the touch screen.

6. Select the size of the loaded paper in the cassette at **Page size**, and then select **Register**.

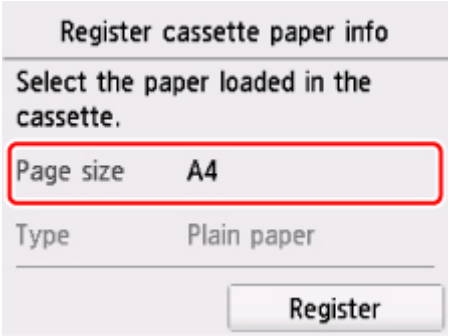

7. Open the operation panel (D), pull out the paper output tray (E) and paper output support (F), and open the output tray extension (G).

Be sure to open the operation panel before printing. If the operation panel is close, the printer does not start printing.

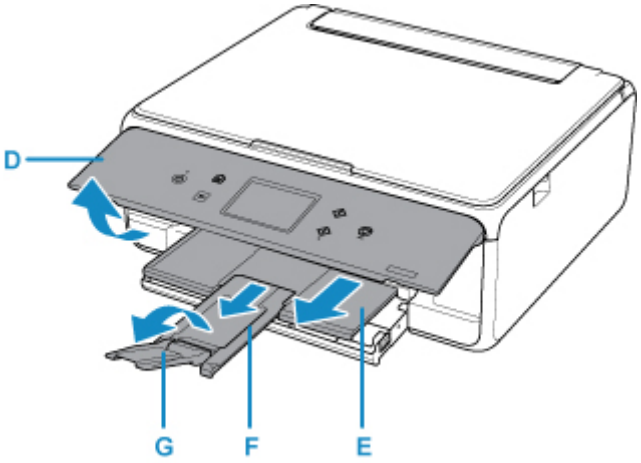

8. Press the **HOME** button (H).

9. Select **Copy** (I).

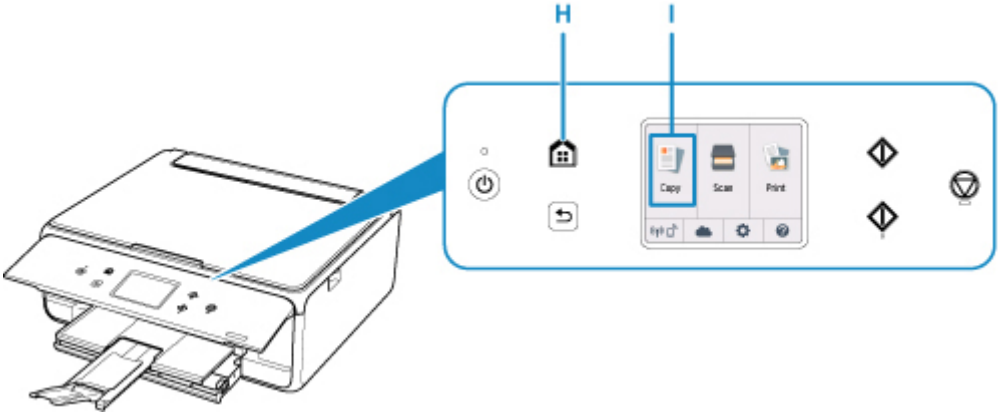

10. Select **Standard copy**.

11. Open the document cover (J).

12. Load the original WITH THE SIDE TO COPY FACING DOWN and align it with the alignment mark (K).

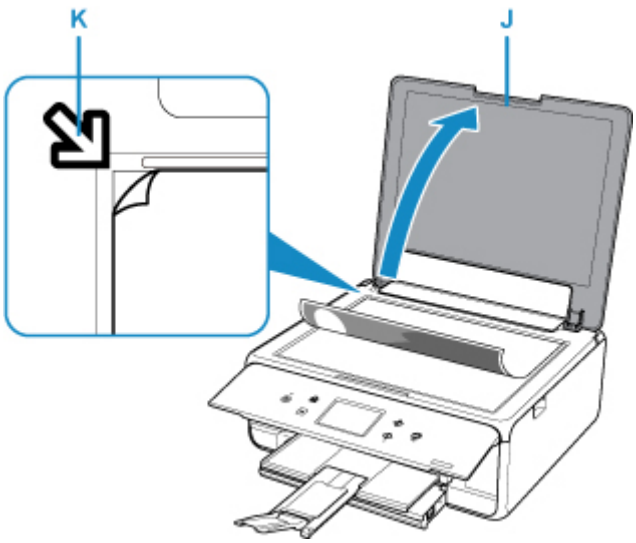

13. Close the document cover.

14. Confirm the paper settings, then press the **Black** button (L) or **Color** button (M).

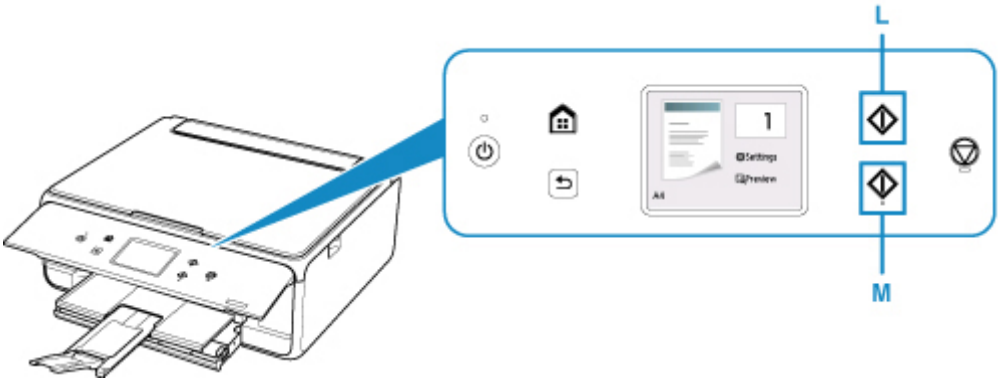

Important

- Do not open the document cover until copying is complete.

Note

- Your printer is equipped with many other convenient copy features.

  Copying

Network

Available Connection Methods

The following connection methods are available on the printer.

- Wireless Connection
  Connect the printer and devices (e.g. computer/smartphone/tablet) using a wireless router.

  If you have a wireless router, we recommend you use one for wireless connection.

  - Connection methods vary depending on the wireless router type.
  - You can change network settings such as the SSID and security protocol on the printer.
  - When the connection between a device and a wireless router is completed and (Wi-Fi icon) is displayed in the device's screen, you can connect the device to the printer using the wireless router.
- Wireless Direct
  Connect the printer and devices (e.g. computer/smartphone/tablet) without using a wireless router.

  - While you are using the printer with Wireless Direct, Internet connection from the printer becomes unavailable. In that case, web services for the printer cannot be used.
  - If you connect a device connected to the Internet via a wireless router to the printer that is in the Wireless Direct, the connection between the device and wireless router will be disabled. In that case, the connection of the device may switch to a mobile data connection automatically depending on your device. Transmission fees for connecting to the Internet using a mobile data connection apply.
  - In the Wireless Direct, you can connect up to five devices at the same time. If you try to connect a sixth device while five devices are already connected, an error will appear. If an error appears, disconnect a device you do not use and configure settings again.
  - Network settings such as the SSID and security protocol are specified automatically.

Note

- You can connect the printer and computer using a USB cable (USB connection). Prepare a USB cable. For details, see Connecting to Another Computer via LAN/Changing from USB to LAN Connection.

Network Connection Settings/Setup

Perform connection setup for the printer and computer/smartphone/tablet.

For more on setup procedure, click here.

Changing Network Settings

See below for changing connection settings for the printer and computer/smartphone/tablet.

- To change network connection method:

- Changing Wireless LAN Connection Method
- Changing Connection Mode

- To add computer/smartphone/tablet to the printer:
  - Connecting to Another Computer via LAN/Changing from USB to LAN Connection
- To use Wireless Direct temporarily:
  - Printing/Scanning with Wireless Direct

IJ Network Device Setup Utility

IJ Network Device Setup Utility checks or diagnoses the settings of the printer and those of computer and restores the status of them if anything is wrong with network connection. Select either link below to download IJ Network Device Setup Utility.

- For Windows
- For Mac OS

- Performing/Changing Network Settings (Windows)

  For Windows, you can perform network settings using IJ Network Device Setup Utility.

  - IJ Network Device Setup Utility (Windows)
- Diagnosing and Repairing Network Settings (Windows/Mac OS)

  You can diagnose or repair network settings using IJ Network Device Setup Utility.

  - For Windows:
    - IJ Network Device Setup Utility (Windows)
  - For Mac OS:
    - IJ Network Device Setup Utility (Mac OS)

Network Connection Tips

See below for tips on using the printer via network connection.

- Network Connection Tips
- Changing Printer's Setting Using Web Browser

Troubleshooting

See Network Settings and Common Problems for troubleshooting on network connection.

Notice/Restriction

See below for details.

- Restrictions on network settings:
  - Restrictions
- Notices when printing using web service:
  - Notice for Web Service Printing

Restrictions

When connecting another device while a device (such as a smartphone) is already connected to the printer, connect it using the same connection method as the connected device.
If you connect using a different connection method, the connection to the device in use will be disabled.

Connect via wireless router

- Make sure your device and the wireless router are connected. For details on checking these settings, see the manual supplied with the wireless router or contact its manufacturer.
  As for a device already connected to the printer without using a wireless router, reconnect it via a wireless router.
- Configuration, router functions, setup procedures and security settings of network devices vary depending on the system environment. For details, see the manual for your network device or contact its manufacturer.
- This printer does not support IEEE802.11ac, IEEE802.11a, or IEEE802.11n (5 GHz). Check if your device supports IEEE802.11n (2.4 GHz), IEEE802.11g or IEEE802.11b.
- If your device is set to the "IEEE802.11n only" mode, WEP or TKIP cannot be used as a security protocol. Change the security protocol for your device to something other than WEP and TKIP or change the setting to something other than "IEEE802.11n only."
  The connection between your device and the wireless router will be temporarily disabled while the setting is changed. Do not proceed to the next screen of this guide until setup is complete.
- For office use, consult your network administrator.
- Note that if you connect to a network with no security protection, your personal information could be disclosed to a third party.

Wireless Direct

Important

- If a device is connected to the Internet via a wireless router, and you then connect it to a printer in Wireless Direct mode, the existing connection between the device and wireless router will be disabled. In that case, the connection of the device may switch to a mobile data connection automatically depending on your device. When you connect to the Internet using a mobile data connection, charges may apply depending on your contract.
  - When you connect a device and the printer using Wireless Direct, the connection information will be saved to Wi-Fi settings. The device may be connected to the printer automatically even after disconnecting it or connecting it to another wireless router.
  - To prevent automatic connection to the printer in Wireless Direct mode, change the connection mode after using the printer, or set not to connect automatically in the Wi-Fi settings of the device.
    For details on checking or changing wireless router settings, see the router manual or contact its manufacturer.

- If you connect a device and the printer using Wireless Direct, Internet connection may become unavailable depending on your environment. In that case, web services for the printer cannot be used.

- In Wireless Direct mode, you can connect up to five devices at the same time. If you try to connect a sixth device while five devices are already connected, an error will appear.
  If an error appears, disconnect a device that does not use the printer, then configure settings again.
- Devices connected to the printer using Wireless Direct cannot communicate with each other.
- Firmware updates for the printer are not available while using Wireless Direct.
- When a device has been connected to the printer without using a wireless router and you want to set it up again using the same connection method, disconnect it first. Disable the connection between the device and printer in the Wi-Fi setting screen.

Network Connection Tips

- Default Network Settings
- Another Printer Found with Same Name
- Connecting to Another Computer via LAN/Changing from USB to LAN Connection
- Printing Network Settings
- Changing Wireless LAN Connection Method

Default Network Settings

LAN Connection Defaults

Item	Default
WLAN active/inactive	**Inactive**
SSID	BJNPSETUP
Wireless LAN security	**Disable**
IP address (**IPv4**)	**Auto setup**
IP address (**IPv6**)	**Auto setup**
Set printer name*	XXXXXXXXXXXX
Enable/disable IPv6	**Enable**
Enable/disable WSD	**Enable**
Timeout setting	**15 minutes**
Enable/disable Bonjour	**Enable**
Service name	Canon TS6100 series
LPR protocol setting	**Enable**
RAW protocol	**Enable**
LLMNR	**Active**
PictBridge communication	**Enable**

("XX" represents alphanumeric characters.)

* Default value depends on printer. To check value, use operation panel.

LAN settings

Wireless Direct Defaults

Item	Default
SSID (Identifier for wireless direct)	DIRECT-abXX-TS6100series *1
Password	YYYYYYYYYY *2
Wireless LAN security	**WPA2-PSK (AES)**
Wireless Direct device name	DIRECT-abXX-TS6100series *1
Connection request confirmation	Displayed

*1 "ab" is specified at random and "XX" represents last two digits of printer's MAC address. (The value is specified when the printer is turned on for the first time.)

*2 The password is specified automatically when the printer is turned on for the first time.

Another Printer Found with Same Name

When the printer is found during setup, other printers with the same name may appear on the results screen.

Select a printer with checking the printer settings against those on detection result screen.

- For Windows:

  Check the printer's MAC address or serial to select the correct printer from the results.

- For Mac OS:

  The printer names appear with the MAC address added at the end or as the printer name specified by Bonjour.

  Check identifiers such as the MAC address, the printer name specified by Bonjour, and the printer's serial number to select the printer from among those that appear.

Note

- Serial number may not appear on result screen.

Check the printer's MAC address and the serial number by one of the following methods.

- Display on the touch screen.

  MAC address

  LAN settings

  Serial number

  System information

- Print the network settings.

  Printing Network Settings

Connecting to Another Computer via LAN/Changing from USB to LAN Connection

- For Windows:
- For Mac OS:

For Windows:

To add a computer to connect to the printer on a LAN or to change from USB to LAN connection, perform setup using the Setup CD-ROM or from the web page.

For Mac OS:

To connect an additional computer to the printer via LAN, or to change from USB to LAN connection, perform setup from the web page.

Printing Network Settings

Use the operation panel to print the printer's current network settings.

Important

- The network settings printout contains important information about your network. Handle it with care.

1. Make sure printer is turned on.

2. Load three sheets of A4 or Letter-sized plain paper.

3. Select "**Network status**" on the touch screen.

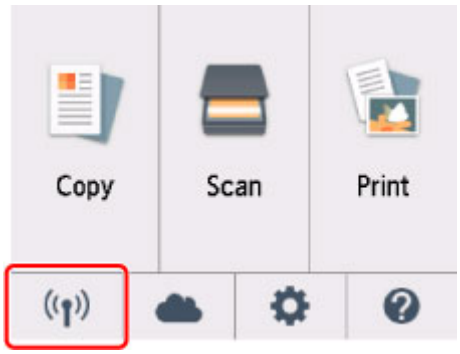

Using the Operation Panel

4. Check message and select **Yes**.

5. Select **Print details**.

6. Select **Yes**.

   The printer starts printing the network setting information.

   The following information on the printer's network setting is printed out. (Some setting values are not displayed depending on the printer settings.)

Item Number	Item	Description	Setting
1	Product Information	Product information	–
1-1	Product Name	Product name	XXXXXXXX
1-2	ROM Version	ROM version	XXXXXXXX
1-3	Serial Number	Serial number	XXXXXXXX
2	Network Diagnostics	Network diagnostics	—
2-1	Diagnostic Result	Diagnostic result	XXXXXXXX

2-2	Result Codes	Result codes	XXXXXXXX
2-3	Result Code Details	Result code details	http://canon.com/ijnwt
3	Wireless LAN	Wireless LAN	Enable/Disable
3-2	Infrastructure	Infrastructure	Enable/Disable
3-2-1	Signal Strength	Signal strength	0 to 100 [%]
3-2-2	Link Quality	Link quality	0 to 100 [%]
3-2-3	Frequency	Frequency	XX (GHz)
3-2-4	MAC Address	MAC address	XX:XX:XX:XX:XX:XX
3-2-5	Connection	Connection status	Active/Inactive
3-2-6	SSID	SSID	Wireless LAN SSID
3-2-7	Channel	Channel	XX (1 to 13)
3-2-8	Encryption	Encryption method	None/WEP/TKIP/AES
3-2-9	WEP Key Length	WEP key length (bits)	Inactive/128/64
3-2-10	Authentication	Authentication method	None/auto/open/shared/WPA-PSK/WPA2-PSK
3-2-11	TCP/IPv4	TCP/IPv4	Enable
3-2-12	IP Address	IP address	XXX.XXX.XXX.XXX
3-2-13	Subnet Mask	Subnet mask	XXX.XXX.XXX.XXX
3-2-14	Default Gateway	Default gateway	XXX.XXX.XXX.XXX
3-2-15	TCP/IPv6	TCP/IPv6	Enable/Disable
3-2-16	Link Local Address	Link local address	XXXX:XXXX:XXXX:XXXX XXXX:XXXX:XXXX:XXXX
3-2-17	Link Local Prefix Length	Link local prefix length	XXX
3-2-18	Stateless Address1	Stateless address 1	XXXX:XXXX:XXXX:XXXX XXXX:XXXX:XXXX:XXXX
3-2-19	Stateless Prefix Length1	Stateless prefix length 1	XXX
3-2-20	Stateless Address2	Stateless address 2	XXXX:XXXX:XXXX:XXXX XXXX:XXXX:XXXX:XXXX
3-2-21	Stateless Prefix Length2	Stateless prefix length 2	XXX

3-2-22	Stateless Address3	Stateless address 3	XXXX:XXXX:XXXX:XXXX XXXX:XXXX:XXXX:XXXX
3-2-23	Stateless Prefix Length3	Stateless prefix length 3	XXX
3-2-24	Stateless Address4	Stateless address 4	XXXX:XXXX:XXXX:XXXX XXXX:XXXX:XXXX:XXXX
3-2-25	Stateless Prefix Length4	Stateless prefix length 4	XXX
3-2-26	Default Gateway1	Default gateway 1	XXXX:XXXX:XXXX:XXXX XXXX:XXXX:XXXX:XXXX
3-2-27	Default Gateway2	Default gateway 2	XXXX:XXXX:XXXX:XXXX XXXX:XXXX:XXXX:XXXX
3-2-28	Default Gateway3	Default gateway 3	XXXX:XXXX:XXXX:XXXX XXXX:XXXX:XXXX:XXXX
3-2-29	Default Gateway4	Default gateway 4	XXXX:XXXX:XXXX:XXXX XXXX:XXXX:XXXX:XXXX
3-2-33	IPsec	IPsec setting	Active
3-2-34	Security Protocol	Security method	ESP/ESP & AH/AH
3-3	Access Point Mode	Operation mode for Wireless Direct	Enable/Disable
3-3-1	MAC Address	MAC address	XX:XX:XX:XX:XX:XX
3-3-2	Connection	Connection status	Active/Inactive
3-3-3	SSID	SSID	Wireless Direct SSID
3-3-4	Password	Password	Wireless Direct password (10 alphanumeric characters)
3-3-5	Channel	Channel	3
3-3-6	Encryption	Encryption method	AES
3-3-7	Authentication	Authentication method	WPA2-PSK
3-3-8	TCP/IPv4	TCP/IPv4	Enable
3-3-9	IP Address	IP address	XXX.XXX.XXX.XXX
3-3-10	Subnet Mask	Subnet mask	XXX.XXX.XXX.XXX
3-3-11	Default Gateway	Default gateway	XXX.XXX.XXX.XXX
3-3-12	TCP/IPv6	TCP/IPv6	Enable/Disable

3-3-13	Link Local Address	Link local address	XXXX:XXXX:XXXX:XXXX XXXX:XXXX:XXXX:XXXX
3-3-14	Link Local Prefix Length	Link local prefix length	XXX
3-3-15	IPsec	IPsec setting	Active
3-3-16	Security Protocol	Security method	–
5	Other Settings	Other settings	–
5-1	Printer Name	Printer name	Printer name (Up to 15 alphanumeric characters)
5-4	WSD Printing	WSD printing setting	Enable/Disable
5-5	WSD Timeout	Timeout	1/5/10/15/20 [min]
5-6	LPD Printing	LPD printing setting	Enable/Disable
5-7	RAW Printing	RAW printing setting	Enable/Disable
5-9	Bonjour	Bonjour setting	Enable/Disable
5-10	Bonjour Service Name	Bonjour service name	Bonjour service name (Up to 52 alphanumeric characters)
5-11	LLMNR	LLMNR setting	Enable/Disable
5-12	SNMP	SNMP setting	Enable/Disable
5-13	PictBridge Commun.	PictBridge Communication	Enable/Disable
5-14	DNS Server	Obtain DNS server address automatically	Auto/Manual
5-15	Primary Server	Primary server address	XXX.XXX.XXX.XXX
5-16	Secondary Server	Secondary server address	XXX.XXX.XXX.XXX
5-17	Proxy Server	Proxy server setting	Enable/Disable
5-18	Proxy Address	Proxy address	XXXXXXXXXXXXXXXXXXXX
5-19	Proxy Port	Proxy port specification	1 to 65535
5-20	Cert. Fingerprt(SHA-1)	Certificate fingerprint(SHA-1)	XXXXXXXX XXXXXXXX XXXXXXXX XXXXXXXX XXXXXXXX
5-21	Cert. Fingerprt(SHA-256)	Certificate fingerprint(SHA-256)	XXXXXXXX XXXXXXXX XXXXXXXX XXXXXXXX XXXXXXXX XXXXXXXX XXXXXXXX XXXXXXXX

6	Bluetooth	Bluetooth settings	—
6-1	Bluetooth Setting	Bluetooth	Enable/Disable
6-2	Bluetooth PIN Code	Bluetooth PIN code	XXXXXXXX
6-3	Bluetooth Device Address	Bluetooth device address of the printer	XXXXXXXX
6-4	Peer Device Address	Device address of paired device	XXXXXXXX
6-5	Bluetooth Device Name	Bluetooth device name of the printer	XXXXXXXX
7	Printer Log Service	Printer log service	—
7-1	Unsent Usage Logs	Number of unsent usage logs	0 to 200
7-2	Usage Log Last Sent	Last date when usage log was sent	XXXXXXXX
7-3	Point Service	Registration status of Ikkyu	Active/Awaiting Activation/No Active Service

("XX" represents alphanumeric characters.)

Changing Wireless LAN Connection Method

Follow either procedure below to change wireless LAN connection method (infrastructure or Wireless Direct).

- **For Windows:**
  - Redo setup using the Setup CD-ROM or from the web page.
  - Perform settings on the **Network Settings** screen on IJ Network Device Setup Utility.

Important

- Before you perform settings using IJ Network Device Setup Utility, turn on Easy wireless connect mode on the printer following the procedure below.
  1. Make sure printer is turned on.

     If the HOME screen is not displayed, press the HOME button.
  2. Select "**Network status**" on the touch screen.

     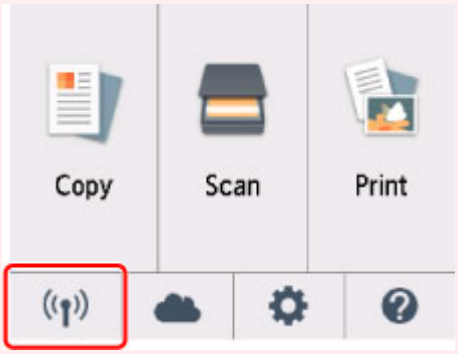

     Using the Operation Panel
  3. Check message and select **Yes**.
  4. Select **LAN settings**.
  5. Select **Wireless LAN**.
  6. Select **Wireless LAN setup**.
  7. Select **Easy wireless connect**.
  8. Check message and select **Yes**.

     Follow instructions on your smartphone or tablet.
  9. If message saying setup is completed appears, select **OK**.

- **For Mac OS:**

  Redo setup from the web page.

Handling Paper, Originals, Ink Tanks, etc.

- Loading Paper
- Loading Originals
- Replacing Ink Tanks

Loading Paper

- Paper Sources
- Loading Paper in the Rear Tray
- Loading Paper in the Cassette
- Loading Envelopes

Paper Sources

The printer has two paper sources for feeding paper, the rear tray (A) and cassette (B).

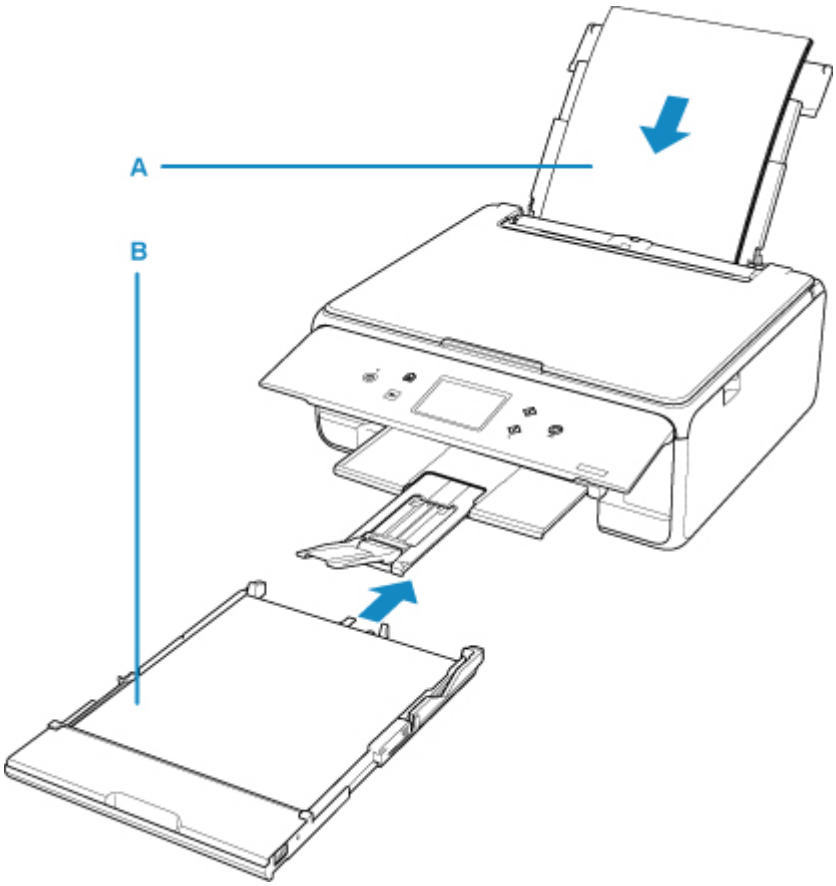

You can load all supported paper on the rear tray.

- Supported Media Types

You can load A4, B5, A5, or Letter-sized plain paper in the cassette.

Note

- When printing, select the correct page size and media type. If you select the wrong page size or media type, the printer may feed paper from the wrong paper source or may not print with the proper print quality.

  For details on how to load paper in each paper source, see below.

  - Loading Paper in the Rear Tray
  - Loading Paper in the Cassette
  - Loading Envelopes

Loading Paper in the Rear Tray

You can load plain paper or photo paper.

You can also load envelopes on the rear tray.

Loading Envelopes

Important

- If you cut plain paper into small size such as 4" x 6" (10 x 15 cm) or 5" x 7" (13 x 18 cm) to perform trial print, it can cause paper jams.

Note

- We recommend Canon genuine photo paper for printing photos.

  For details on the Canon genuine paper, see Supported Media Types.
- You can use general copy paper or Canon Red Label Superior WOP111/Canon Océ Office Colour Paper SAT213.

  For the page size and paper weight you can use for this printer, see Supported Media Types.

1. Prepare paper.

   Align the edges of paper. If paper is curled, flatten it.

   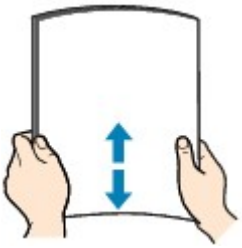

   ## Note

   - Align the edges of paper neatly before loading. Loading paper without aligning the edges may cause paper jams.
   - If paper is curled, hold the curled corners and gently bend them in the opposite direction until the paper becomes completely flat.

     For details on how to flatten curled paper, see Check3 in Paper Is Smudged / Printed Surface Is Scratched.

2. Load paper.

   1. Open the rear tray cover (A) and then pull up the paper support (B).

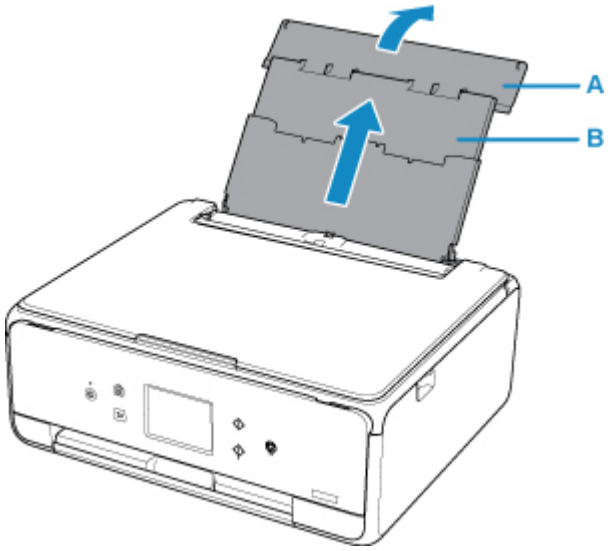

2. Open the feed slot cover (C).

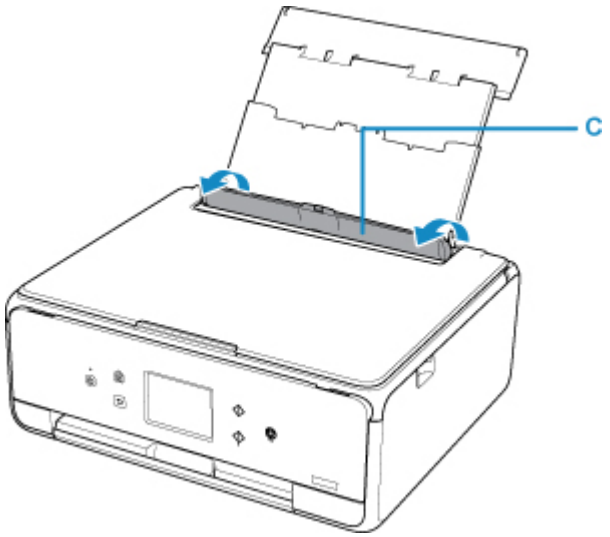

3. Slide the paper guides to open them, and load the paper in the center of the rear tray WITH THE PRINT SIDE FACING UP.

4. Slide the paper guides (D) to align them with both sides of the paper stack.

   Do not slide the paper guides too hard against the paper. The paper may not be fed properly.

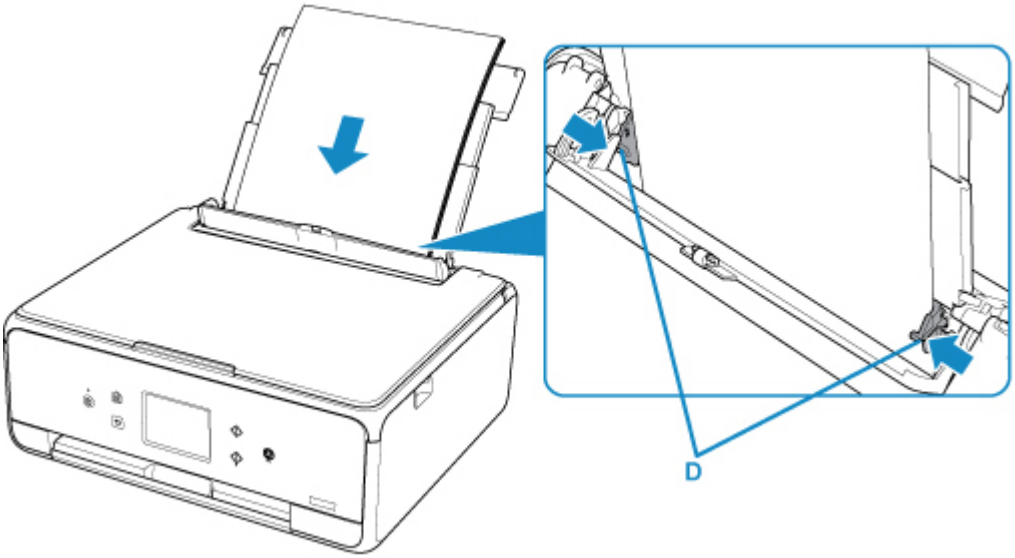

Important

- Always load paper in the portrait orientation (E). Loading paper in the landscape orientation (F) can cause paper jams.

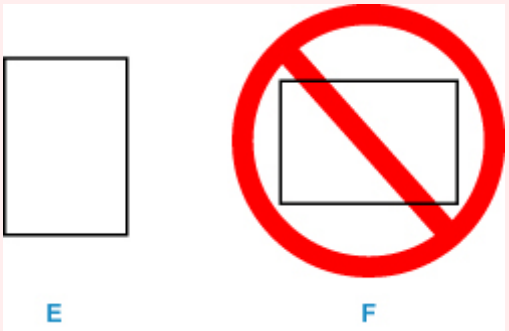

Note

- Do not load sheets of paper higher than the load limit mark (G).

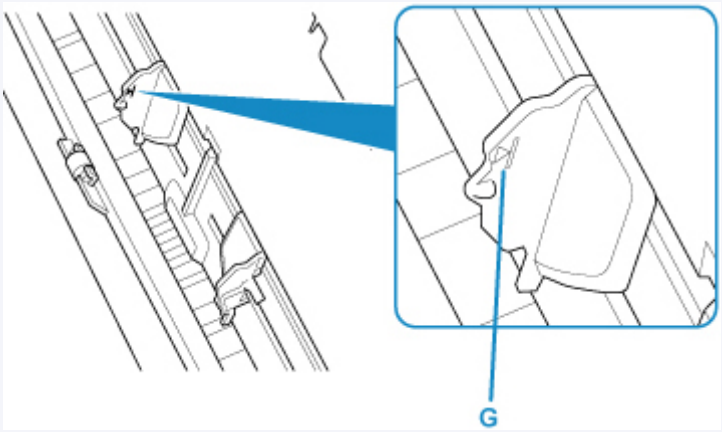

5. Close the feed slot cover (H) gently.

Important

- If the feed slot cover is open, paper cannot be fed. Be sure to close the feed slot cover.

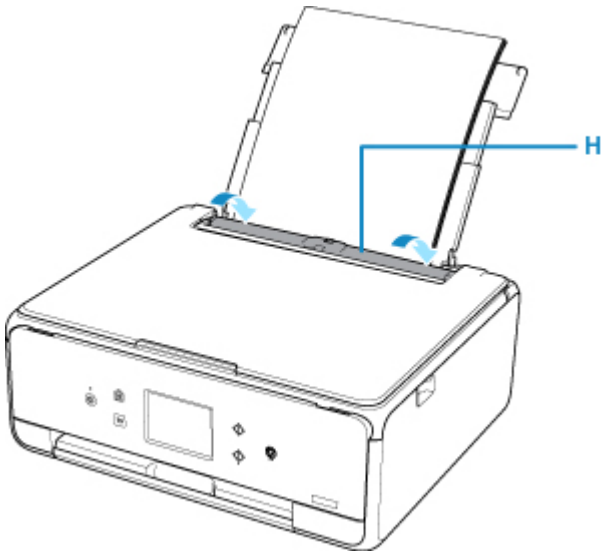

After closing the feed slot cover, the paper information registration screen for the rear tray is displayed on the touch screen.

6. Select the size and type of the loaded paper in the rear tray at **Page size** and **Type**, and then select **Register**.

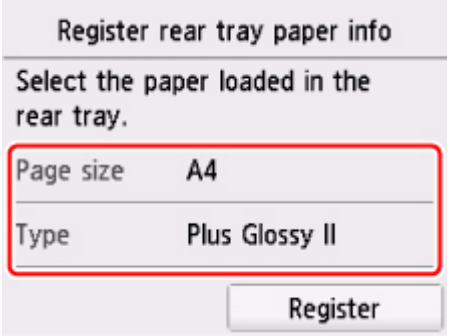

7. Open the operation panel (I), pull out the paper output tray (J) and paper output support (K), and open the output tray extension (L).

   Be sure to open the operation panel before printing. If the operation panel is close, the printer does not start printing.

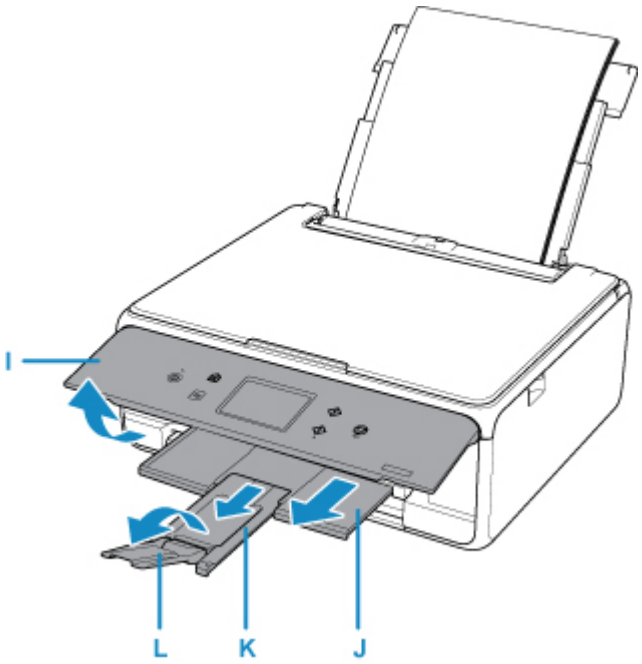

Note

- When printing, select the size and type of the loaded paper on the print settings screen of the operation panel or the computer.
  - There are various types of paper, such as paper with a special surface coating for printing photos at optimal quality and paper suitable for documents. Each media type has specific preset settings (how ink is used and sprayed, distance from nozzles, etc.), that allow you to print to that type with optimal image quality. The wrong paper settings may cause poor printout color quality or scratches on the printed surface. If you notice blurring or uneven colors, increase the print quality setting and try printing again.
  - To prevent incorrect printing, this printer has a function that detects whether the information set for the paper loaded on the rear tray matches the paper settings. Before printing, make paper settings in accordance with the paper information. When this function is enabled, an error message is displayed if these settings do not match to prevent incorrect printing. When this error message is displayed, check and correct the paper settings.

Loading Paper in the Cassette

You can load A4, B5, A5, or Letter-sized plain paper in the cassette.

Note

- In the cassette, be sure to load only plain paper.
- You can use general copy paper or Canon Red Label Superior WOP111/Canon Océ Office Colour Paper SAT213.

  For the page size and paper weight you can use for this printer, see Supported Media Types.

1. Prepare paper.

   Align the edges of paper. If paper is curled, flatten it.

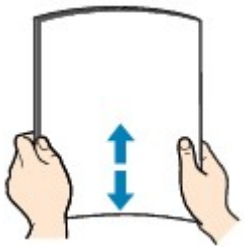

   Note

   - Align the edges of paper neatly before loading. Loading paper without aligning the edges may cause paper jams.
   - If paper is curled, hold the curled corners and gently bend them in the opposite direction until the paper becomes completely flat.

     For details on how to flatten curled paper, see Check3 in Paper Is Smudged / Printed Surface Is Scratched.

2. Pull out the cassette (A) from the printer.

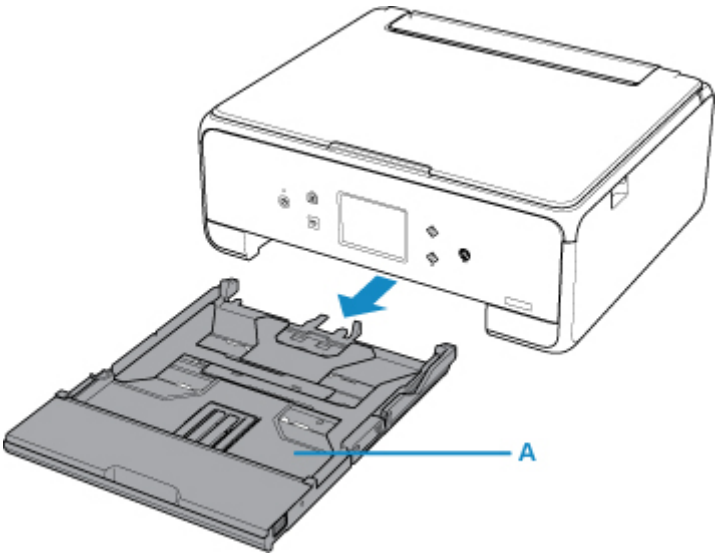

3. Remove the cassette cover (B).

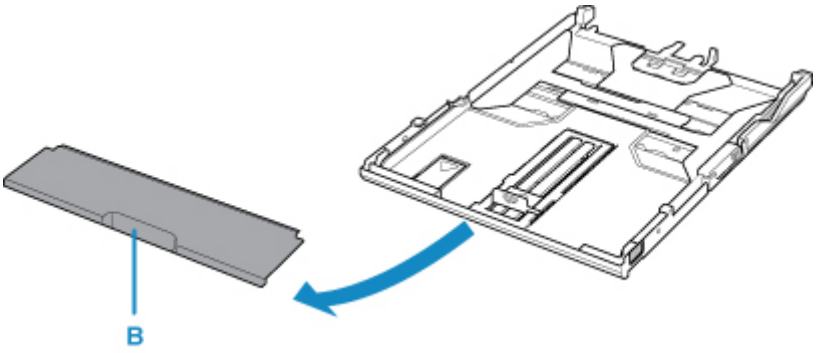

4. Slide the paper guide (C) in front and (D) on the right to open the guides.

5. Load the paper stack WITH THE PRINT SIDE FACING DOWN, and place it in the center of the cassette.

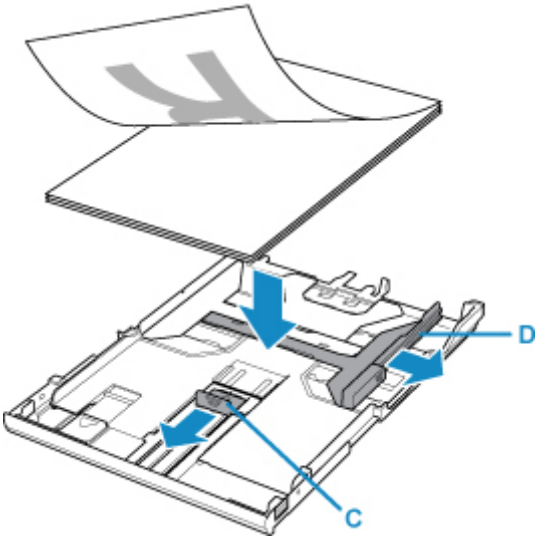

Important

- Always load paper in the portrait orientation (E). Loading paper in the landscape orientation (F) can cause paper jams.

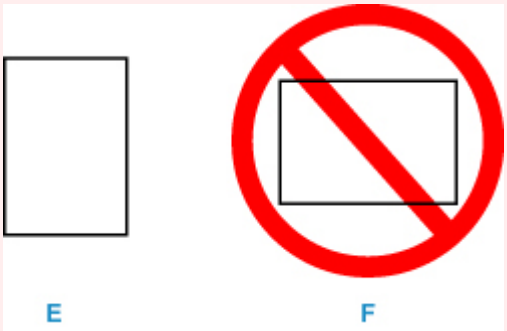

Note

- Align the paper stack with the edge of the cassette as shown in the figure below.

If the paper stack is in contact with the protrusion (G), the paper may not be fed properly.

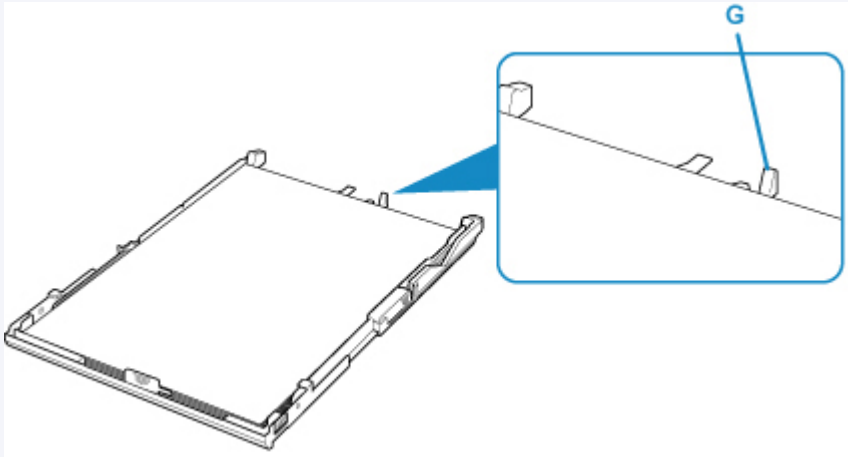

6. Align the paper guide (H) in front with the paper stack.

   Align the paper guide (H) with where it clicks into place.

7. Slide the paper guide (I) on the right to align with the paper stack.

   Do not slide the paper guide too hard against the paper. The paper may not be fed properly.

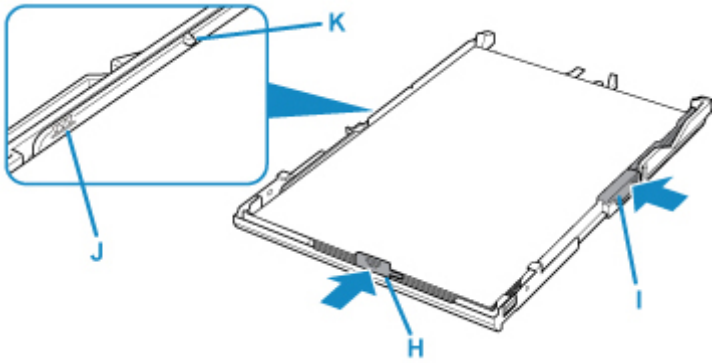

Note

- Do not load sheets of paper higher than the load limit mark (J).
- Keep the paper stack height below the tabs (K) of the paper guides.

8. Mount the cassette cover, and then insert the cassette into the printer.

   Push the cassette into the printer until it stops.

   After inserting the cassette into the printer, the paper information registration screen for the cassette is displayed on the touch screen.

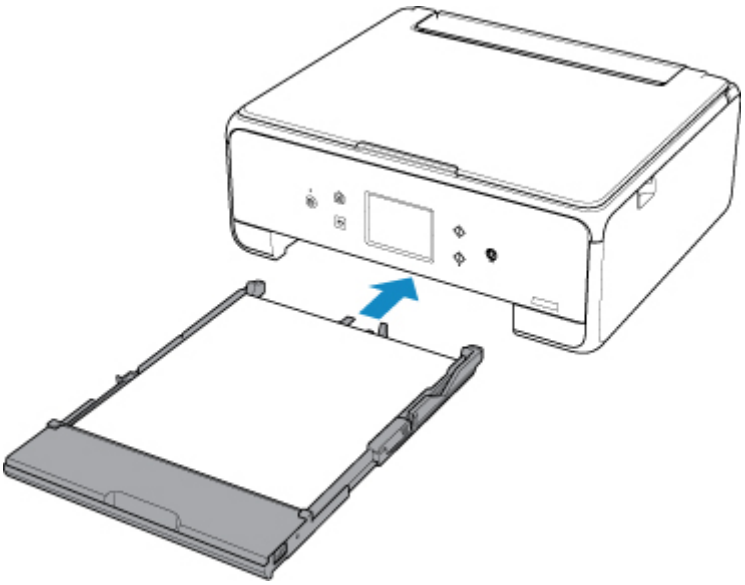

9. Select the size and type of the loaded paper in the cassette at **Page size**, then select **Register**.

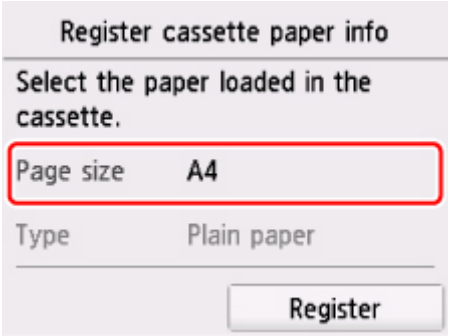

10. Open the operation panel (L), pull out the paper output tray (M) and paper output support (N), and open the output tray extension (O).

    Be sure to open the operation panel before printing. If the operation panel is close, the printer does not start printing.

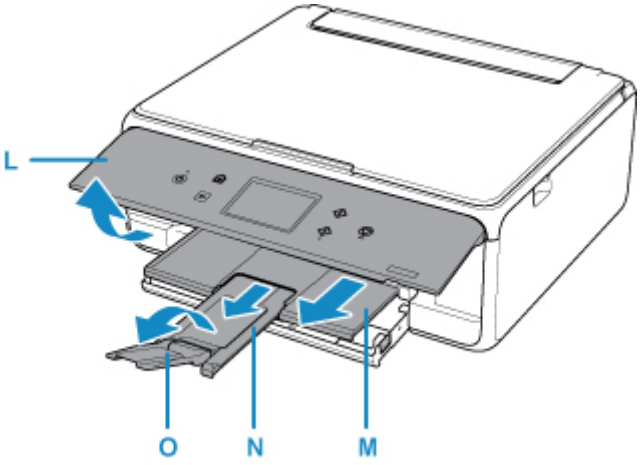

Note

- When printing, select the size and type of the loaded paper on the print settings screen of the operation panel or the computer.
  - To prevent incorrect printing, this printer has a function that detects whether the information set for the paper loaded in the cassette matches the paper settings. Before printing, make paper settings in accordance with the paper information. When this function is enabled, an error message is displayed if these settings do not match to prevent incorrect printing. When this error message is displayed, check and correct the paper settings.

Loading Envelopes

You can load Envelope DL and Envelope Com 10 on the rear tray.

The address is automatically rotated and printed according to the envelope's direction by specifying with the printer driver properly.

Important

- Printing of envelopes from the operation panel or from a PictBridge (Wireless LAN) compliant device is not supported.
- Do not use the following envelopes. They could jam in the printer or cause the printer to malfunction.
  - Envelopes with an embossed or treated surface
  - Envelopes with a double flap
  - Envelopes whose gummed flaps are already moistened and adhesive

1. Prepare envelopes.

   - Press down on all four corners and edges of the envelopes to flatten them.

   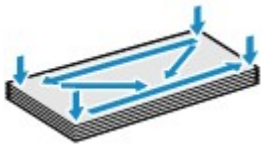

   - If the envelopes are curled, hold the opposite corners and gently twist them in the opposite direction.

   - If the corner of the envelope flap is folded, flatten it.
   - Use a pen to press the leading edge in the inserting direction flat and sharpen the crease.

   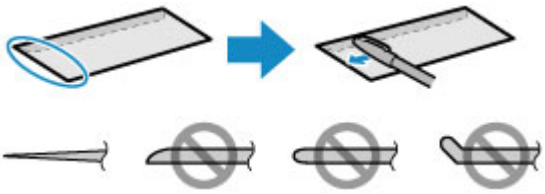

   The figures above show a side view of the leading edge of the envelope.

   Important

   - The envelopes may jam in the printer if they are not flat or the edges are not aligned. Make sure that no curl or puff exceeds 0.12 inches (3 mm).

2. Load envelopes.

   1. Open the rear tray cover (A) and then pull up the paper support (B).

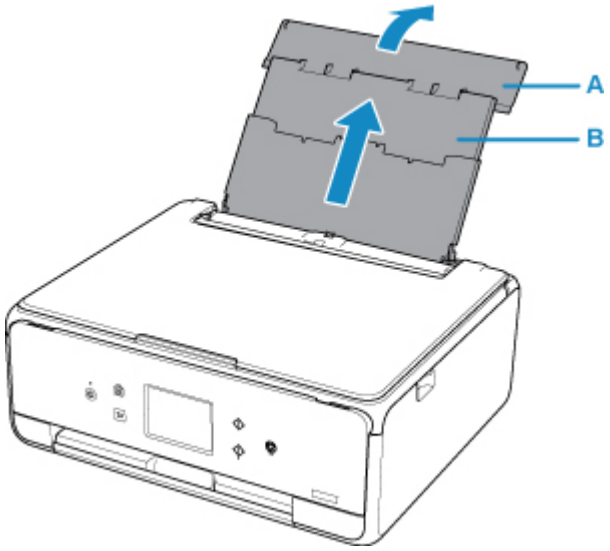

2. Open the feed slot cover (C).

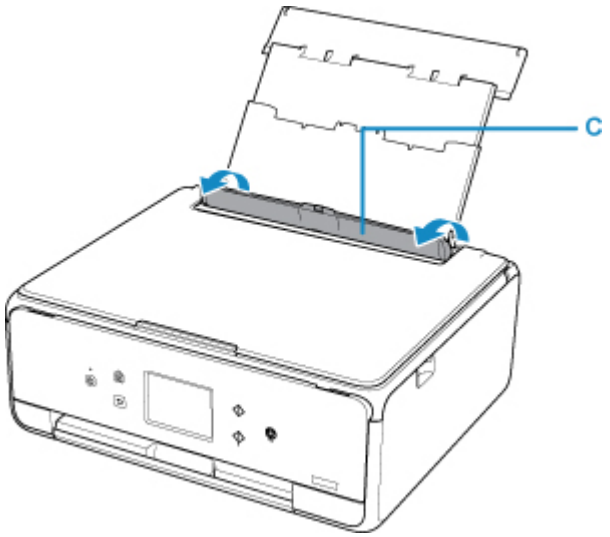

3. Slide the paper guides (D) to open them, and load the envelopes in the center of the rear tray WITH THE PRINT SIDE FACING UP.

   Fold flap of the envelope and load the envelope in the portrait orientation with the address side facing up.

   Up to 10 envelopes can be loaded at once.

4. Slide the paper guides (D) to align them with both sides of the envelopes.

   Do not slide the paper guides too hard against the envelopes. The envelopes may not be fed properly.

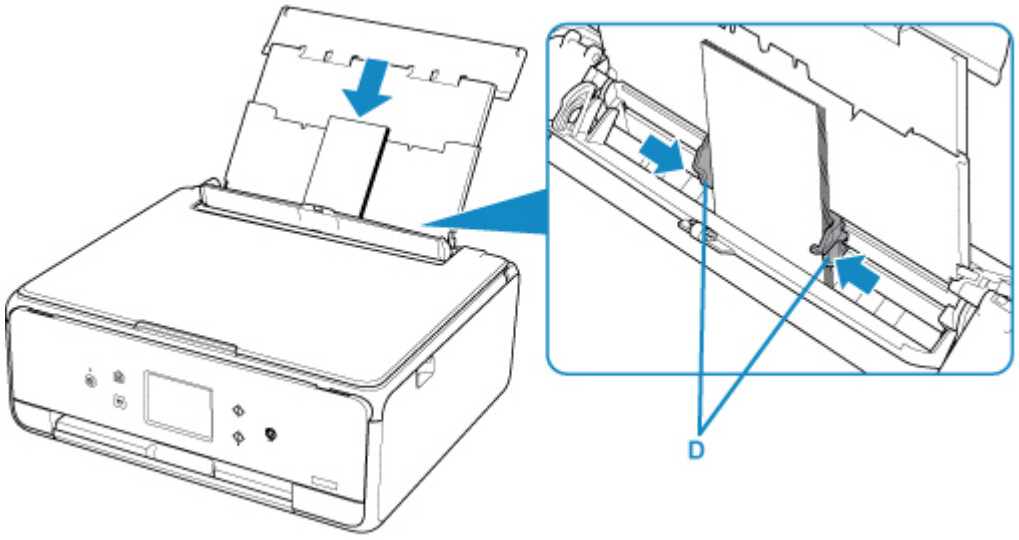

Note

- Do not load envelopes higher than the load limit mark (E).

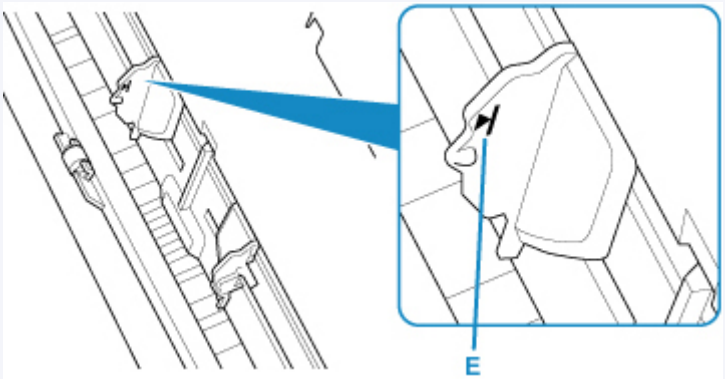

5. Close the feed slot cover (F) gently.

Important

- If the feed slot cover is open, paper cannot be fed. Be sure to close the feed slot cover.

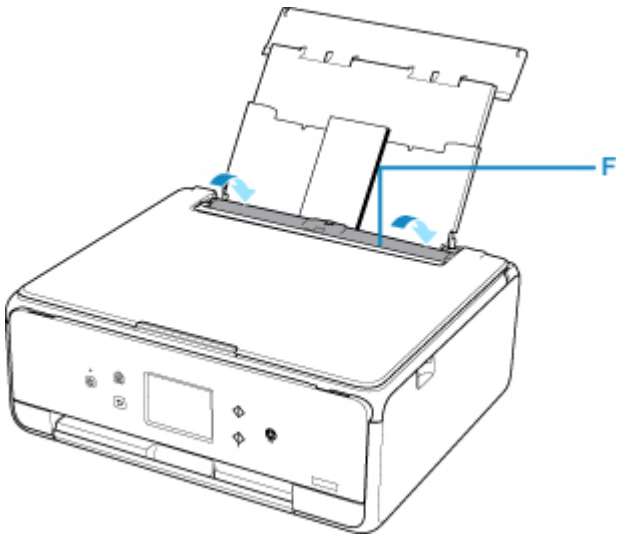

After closing the feed slot cover, the paper information registration screen for the rear tray is displayed on the touch screen.

6. Select the size and type of the loaded envelopes in the rear tray at **Page size** and **Type**, and then select **Register**.

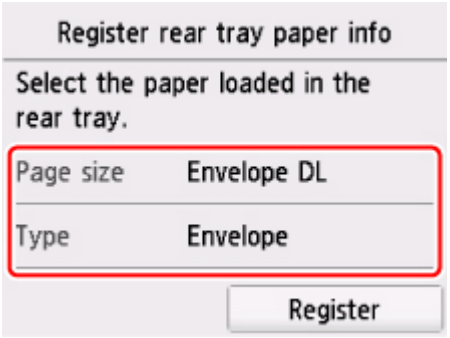

7. Open the operation panel (G), pull out the paper output tray (H) and paper output support (I), and open the output tray extension (J).

   Be sure to open the operation panel before printing. If the operation panel is close, the printer does not start printing.

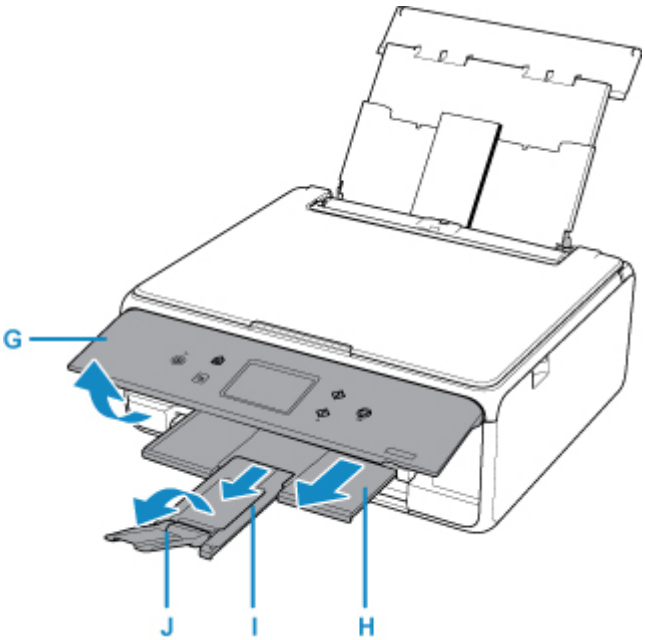

Note

- After loading envelopes, select the size and type of the loaded envelopes on the print settings screen of the printer driver.
  - To prevent incorrect printing, this printer has a function that detects whether the information set for the paper loaded on the rear tray matches the paper settings. Before printing, make paper settings in accordance with the paper information. When this function is enabled, an error message is displayed if these settings do not match to prevent incorrect printing. When this error message is displayed, check and correct the paper settings.

Loading Originals

- Loading Originals on the Platen Glass
- Loading Based on Use
- Supported Originals
- How to Detach / Attach the Document Cover

Loading Originals on the Platen Glass

1. Open the document cover.

2. Load the original WITH THE SIDE TO SCAN FACING DOWN on the platen glass.

   Loading Based on Use

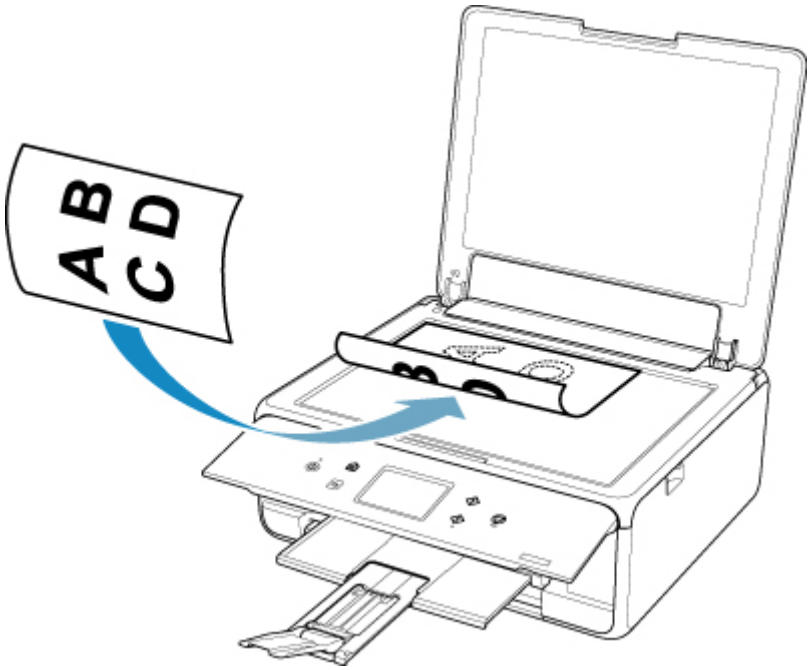

Important

- Be sure to observe the following when loading the original on the platen glass.
  - Do not place any objects weighing 4.4 lb (2.0 kg) or more on the platen glass.
  - Do not put any pressure of 4.4 lb (2.0 kg) or more on the platen glass, such as pressing down the original.

  Failure to observe the above may cause the scanner to malfunction or the platen glass to break.

3. Close the document cover gently.

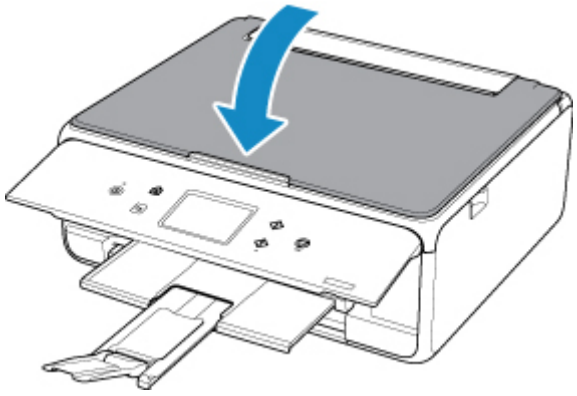

Important

- After loading the original on the platen glass, be sure to close the document cover before starting to copy or scan.

Loading Based on Use

Load the original in the correct position according to the function to use. If you do not load the original correctly, it may not be scanned properly.

Originals	Function	How to Load
Magazines, Newspapers, and Documents	**Copying**	Loading the Original to Be Aligned with the Alignment Mark
	Scanning by detecting the type and size of the original automatically If you scan using the operation panel, select **Auto scan** for **Doc.type** in **Scan**.	
	Scanning by specifying a standard size (A4, Letter, etc.) If you scan using the operation panel, select **Document** or **Photo** for **Doc.type** in **Scan** and specify a standard size (A4, Letter, etc.) for **Scan size** to scan originals.	
Photos, Postcards, Business Cards, and Disc (BD/DVD/CD)	**Scanning only one original** If you scan using the operation panel, follow the operation below. • Select **Auto scan** for **Doc.type** in **Scan**. • Select **Photo** for **Doc.type** in **Scan** and specify **Auto scan** for **Scan size** to scan originals.	Loading in the Center of the Platen Glass
	Scanning two or more originals If you scan using the operation panel, follow the operation below. • Select **Auto scan** for **Doc.type** in **Scan**. • Select **Photo** for **Doc.type** in **Scan** and specify **Auto multi scan** for **Scan size** to scan two or more originals.	Loading Two or More Originals

Note

- For details on how to scan from the computer and how to load originals, see below.
  - For Windows:
    - Scanning from Computer (Windows)
  - For Mac OS:

Scanning from Computer (AirPrint)

Loading the Original to Be Aligned with the alignment mark

Place the original WITH THE SIDE TO SCAN FACING DOWN on the platen glass and align it with the alignment mark. Portions placed on the diagonally striped area cannot be scanned.

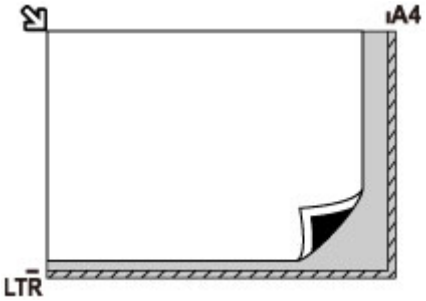

Important

- The printer cannot scan the striped area (A) (0.04 inches (1 mm) from the edges of the platen glass).

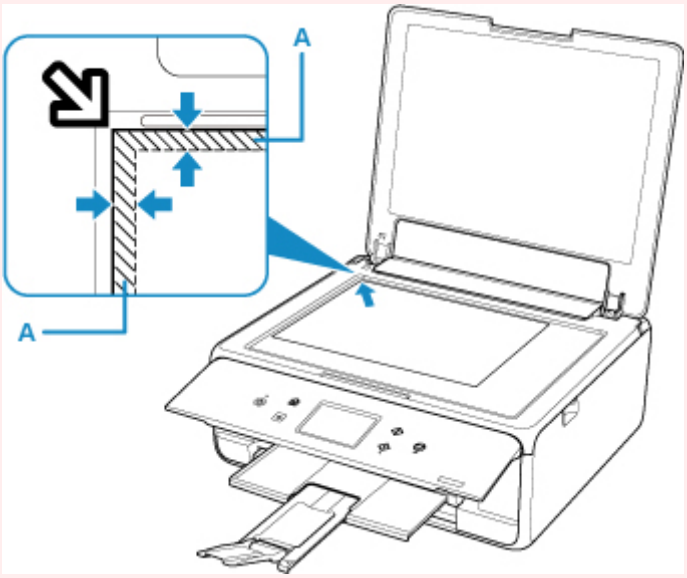

Loading Only One Original in the Center of the platen glass

Place the original WITH THE SIDE TO SCAN FACING DOWN, with 0.40 inches (1 cm) or more space between the edges (diagonally striped area) of the platen glass. Portions placed on the diagonally striped area cannot be scanned.

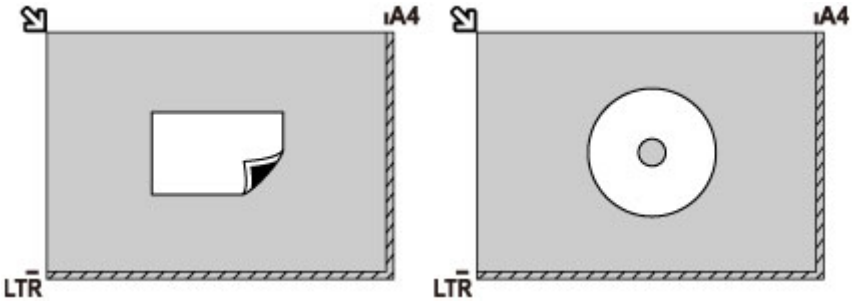

Loading Two or More Originals on the platen glass

Place the originals WITH THE SIDE TO SCAN FACING DOWN. Allow 0.40 inches (1 cm) or more space between the edges (diagonally striped area) of the platen glass and the originals, and between the originals. Portions placed on the diagonally striped area cannot be scanned.

You can place up to 12 items.

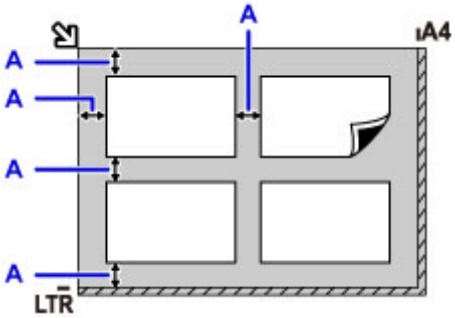

A: More than 0.40 inches (1 cm)

Note

- The Skew Correction function automatically compensates for the originals placed at an angle of up to approximately 10 degrees. Slanted photos with a long edge of 7.1 inches (180 mm) or more cannot be corrected.
- Non-rectangular or irregular shaped photos (such as cut out photos) may not be scanned properly.

Supported Originals

Item	Details
Types of originals	- Text document, magazine, or newspaper - Printed photo, postcard, business card, or disc (BD/DVD/CD, etc.)
Size (width x height)	Max. 8.5 x 11.7 inches (216 x 297 mm)

Note

- When loading a thick original such as a book on the platen glass, you can load it by removing the document cover from the printer.

  How to Detach / Attach the Document Cover

How to Detach / Attach the Document Cover

Detaching the document cover:

Hold up the document cover vertically and then tip it back.

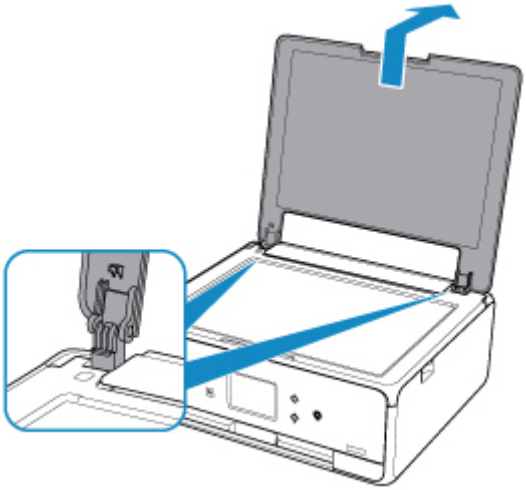

Attaching the document cover:

Fit both hinges (A) of the document cover into the holder (B) and insert both hinges of the document cover vertically as illustrated below.

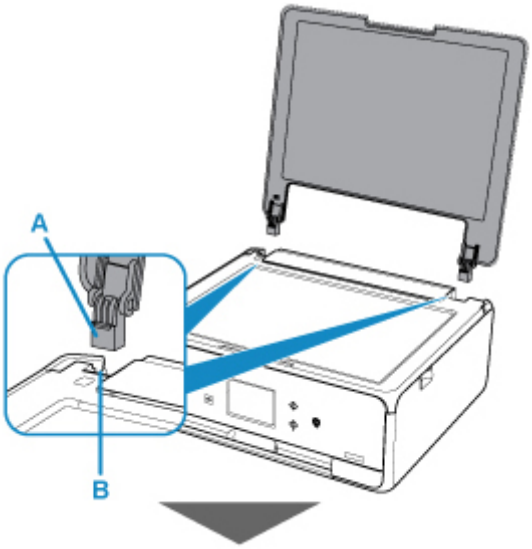

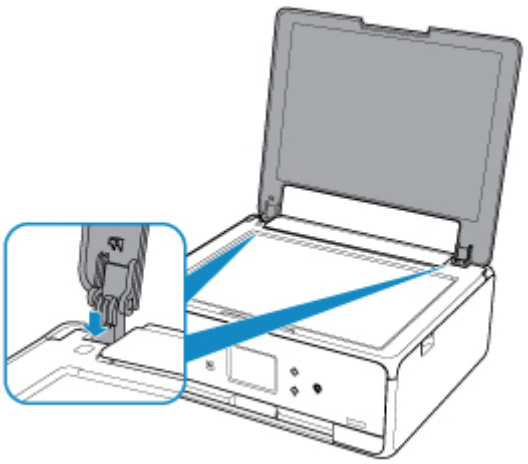

Replacing Ink Tanks

- Replacing Ink Tanks
- Checking Ink Status on the Touch Screen
- Ink Tips

Replacing Ink Tanks

When remaining ink cautions or errors occur, the message will appear on the touch screen to inform you of the error. In this state, the printer cannot print or scan. Take appropriate action according to the message.

An Error Occurs

Note

- If print results become faint or white streaks appear despite sufficient ink levels, see Maintenance Procedure.
- For precautionary notes on handling ink tanks, see Notes on ink tanks.

Replacing Procedure

When you need to replace an ink tank, follow the procedure below.

1. Make sure that the power is turned on.

2. Open the scanning unit / cover.

   The print head holder moves to the replacement position.

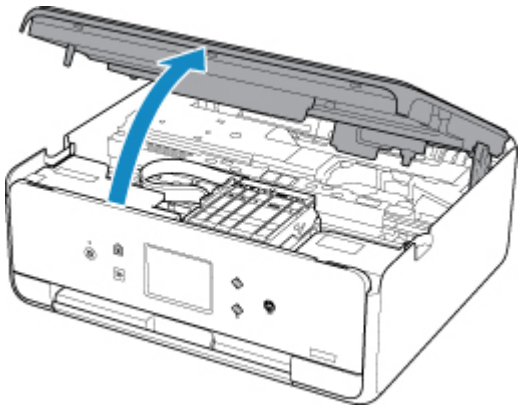

Caution

- Do not hold the print head holder to stop or move it forcibly. Do not touch the print head holder until it stops completely.

Important

- Do not touch the metallic parts or other parts inside the printer.
- If the scanning unit / cover is left open for more than 10 minutes, the print head holder moves to the right. In this case, close and reopen the scanning unit / cover.

3. Remove the ink tank where the ink runs out.

   Push the tab (A) and lift the ink tank to remove.

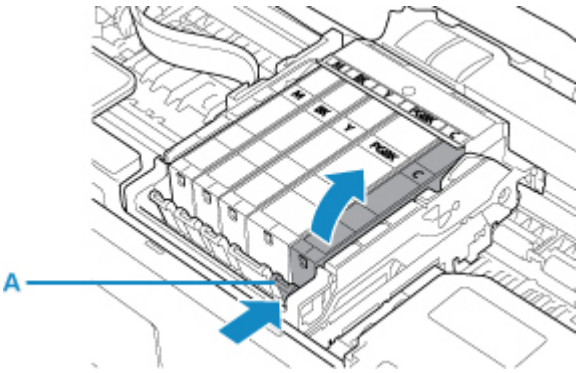

Important

- Do not touch other parts besides the ink tanks.
- Handle the ink tank carefully to avoid staining of clothing or the surrounding area.
- Discard the empty ink tank according to the local laws and regulations regarding disposal of consumables.

Note

- Do not remove two or more ink tanks at the same time. Be sure to replace ink tanks one by one when replacing two or more ink tanks.

4. Take a new ink tank out of its package, remove the orange tape (B) completely, then remove the protective film (C) completely.

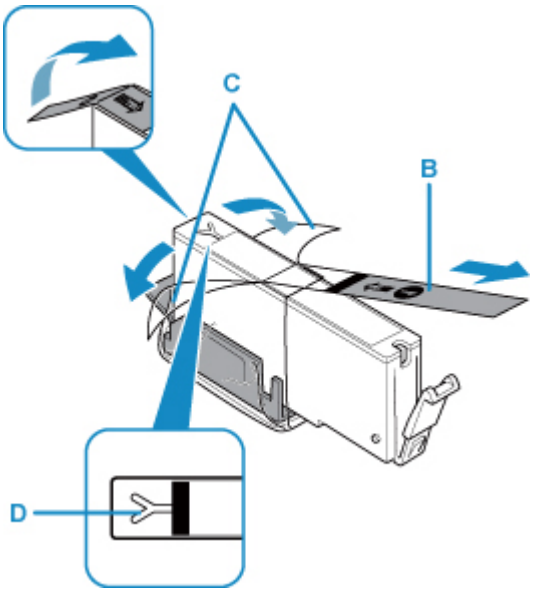

Important

- Handle an ink tank carefully. Do not drop or apply excessive pressure to it.
- If the orange tape remains on the Y-shape air hole (D), ink may splash or the printer may not print properly.

5. Hold the ink tank with the orange protective cap (E) pointing up while being careful not to block the Y-shape air hole (D).

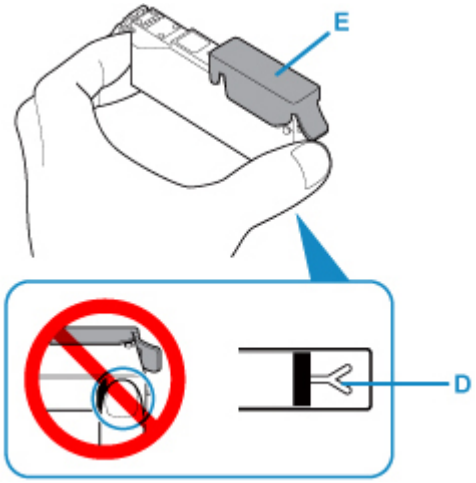

6. Lift up the tab on the orange protective cap (E) to remove it off GENTLY.

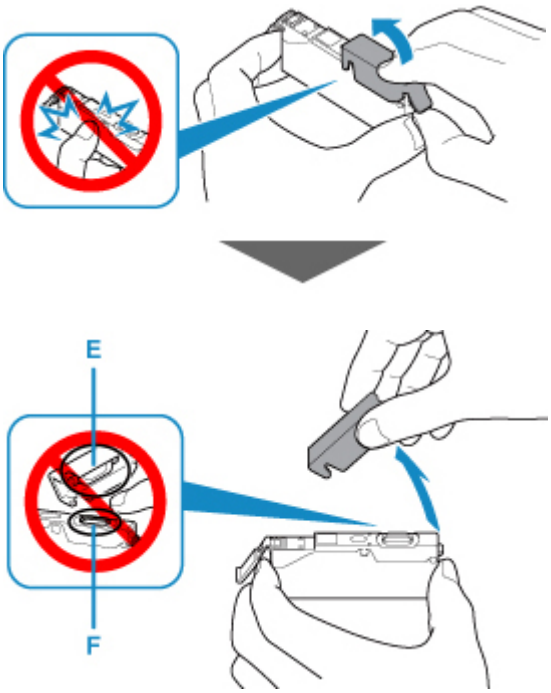

Important

- Do not push the sides of the ink tank. If you push the sides of the ink tank with the Y-shape air hole (D) blocked, ink may splash.
- Do not touch the inside of the orange protective cap (E) or the open ink port (F). The ink may stain your hands if you touch them.
- Do not reattach the protective cap (E) once you have removed it. Discard it according to the local laws and regulations regarding disposal of consumables.

7. Insert the front end of the ink tank into the print head at a slant.

Make sure that the position of the ink tank matches the label.

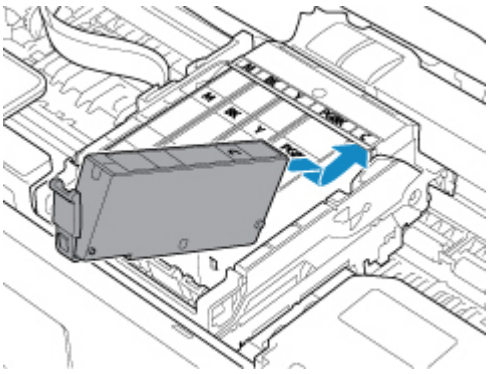

8. Press on the top of the ink tank until the ink tank snaps firmly into place.

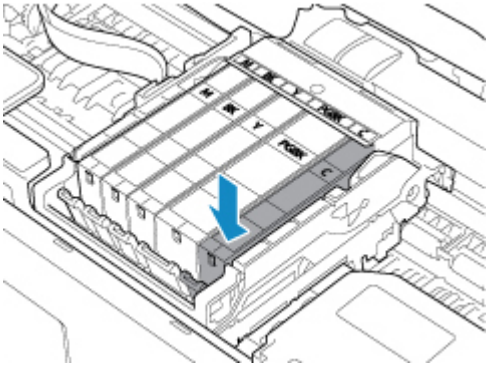

Important

- You cannot print if the ink tank is installed in the wrong position. Be sure to install the ink tank in the correct position according to the label on the print head holder.
- You cannot print unless all the ink tanks are installed. Be sure to install all the ink tanks.

9. Close the scanning unit / cover.

To close the scanning unit / cover, hold it up once, then take it down gently.

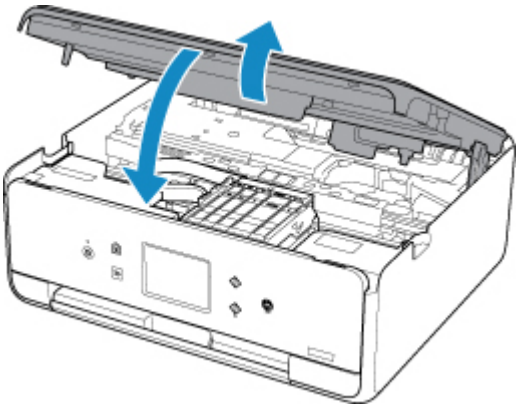

Caution

- When closing the scanning unit / cover, be careful not to get your fingers caught.

Note

- If the error message appears after the scanning unit / cover is closed, take appropriate action.

An Error Occurs

- When you start printing after replacing the ink tank, the printer starts cleaning the print head automatically. Do not perform any other operations until the printer completes the cleaning of the print head.
- If the print head is out of alignment, as indicated by misaligned printed ruled lines or similar symptoms, align the print head.

Notes on ink tanks

Important

- If you remove an ink tank, replace it immediately. Do not leave the printer with the ink tank removed.
- Use a new ink tank for replacement. Installing a used ink tank may cause the nozzles to clog. Furthermore, with such an ink tank, the printer will not be able to inform you when to replace the ink tank properly.
- Once an ink tank has been installed, do not remove it from the printer and leave it out in the open. This will cause the ink tank to dry out, and the printer may not operate properly when it is reinstalled. To maintain optimal printing quality, use an ink tank within six months of first use.

Note

- Color ink may be consumed even when printing a black-and-white document or when black-and-white printing is specified. Every ink is also consumed in the standard cleaning and deep cleaning of the print head, which may be necessary to maintain the performance of the printer.

  When an ink tank is out of ink, replace it immediately with a new one.

  Ink Tips

Checking Ink Status on the Touch Screen

1. Make sure that the power is turned on, and display the HOME screen.

   If the HOME screen is not displayed, press the **HOME** button to display it.

2. Select **Setup** on the HOME screen.

   Using the Operation Panel

   The setup menu screen will appear.

3. Select **Estimated ink levels**.

   A symbol appears in the area (A) if there is any information about the remaining ink level.

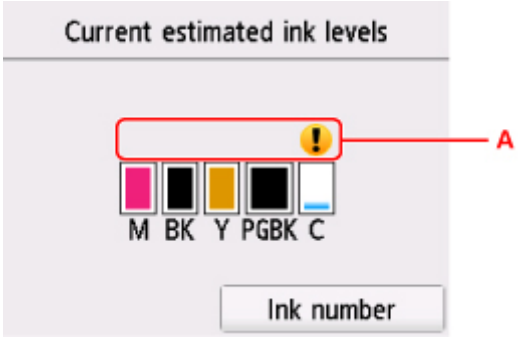

   Example:

   The ink is running low. Prepare a new ink tank.

   The resulting print quality may not be satisfactory, if printing is continued under this condition.

Note

- The above screen shows estimated ink levels.
- Selecting **Ink number** displays the **Ink number** screen for checking ink numbers. Selecting **Order ink now** on this screen displays the QR code for accessing the ink purchasing site. Cost of connecting to Internet is to be born by the customer.
- You can also check the ink status on a screen of the touch screen displayed while printing.
- You can also check the ink status on the computer screen.
  - For Windows:

    Checking Ink Status from Your Computer

  - For Mac OS:

    Checking Ink Status from Your Computer

Ink Tips

How is ink used for various purposes other than printing?

Ink may be used for purposes other than printing.

When you use the Canon printer for the first time after you install the bundled ink tanks, the printer consumes a small amount of ink in the amount to enable printing by filling the nozzles of the Print Head with ink. For this reason, the number of sheets that can be printed with the first ink tanks is fewer than the succeeding ink tanks.

The printing costs described in the brochures or websites are based on the consumption data from not the first ink tank /ink cartridge but the succeeding ink tank /ink cartridge.

Ink is sometimes used to maintain the optimal printing quality.

To keep printer's performance, Canon printer performs cleaning automatically according to its condition. When the printer performs cleaning, a small amount of ink is consumed. In this case, all colors of ink may be consumed.

[Cleaning function]

The cleaning function helps the printer to suck air bubbles or ink itself from the nozzle and thus prevents print quality degradation or nozzle clogging.

Does black-and-white printing use color ink?

Black-and-white printing may use ink other than black ink depending on the type of printing paper or the settings of the printer driver. So, color ink is consumed even when printing in black-and-white.

Why does the printer have two black ink tanks?

There are two kinds of black ink in the printer: dye ink (BK) and pigment ink (PGBK).

The dye ink is used mainly for printing photos, illustration, etc., and the pigment ink is used for text-based documents. Each has different purposes so that even if one runs out, another will not be used instead. If either of them runs out, the ink tank replacement is required.

These two inks are automatically used depending on the type of printing paper or the settings of the printer driver. You cannot change the usage of these inks yourself.

Maintenance

- If Printing Is Faint or Uneven
- Performing Maintenance Functions from Your Computer (Windows)
- Performing Maintenance Functions from Your Computer (Mac OS)
- Cleaning

If Printing Is Faint or Uneven

- Maintenance Procedure
- Printing the Nozzle Check Pattern
- Examining the Nozzle Check Pattern
- Cleaning the Print Head
- Deep Print Head Cleaning
- Aligning the Print Head

Maintenance Procedure

If print results are blurred, colors are not printed correctly, or print results are unsatisfactory (e.g. misaligned printed ruled lines), perform the maintenance procedure below.

Important

- Do not rinse or wipe the print head and ink tank. This can cause trouble with the print head and ink tank.

Note

- Make sure that the orange protective tape does not remain on the ink tank.

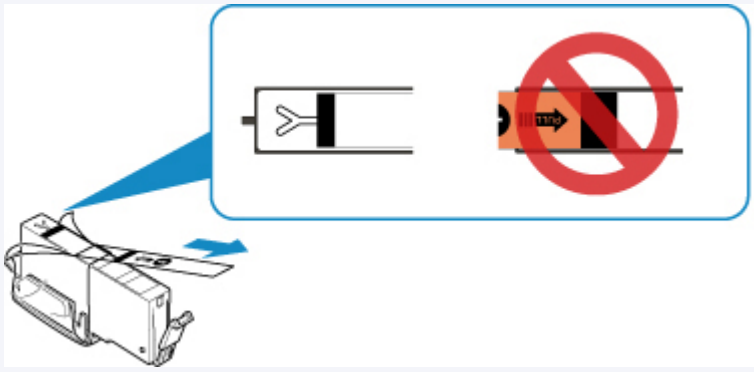

- Check the ink status.

  Checking Ink Status on the Touch Screen

- For Windows, increasing the print quality in the printer driver settings may improve the print result.

  Changing the Print Quality and Correcting Image Data

When the Print Results Are Blurred or Uneven:

Step1 Print the nozzle check pattern.

From the printer

Printing the Nozzle Check Pattern

From the computer

- For Windows:

  Printing a Nozzle Check Pattern

- For Mac OS:

  Printing a Nozzle Check Pattern

Step2 Examine the nozzle check pattern.

If there are missing lines or horizontal white streaks in the pattern:

Step3 Clean the print head.

From the printer

- Cleaning the Print Head

From the computer

- For Windows:
  - Cleaning the Print Heads
- For Mac OS:
  - Cleaning the Print Heads

After cleaning the print head, print and examine the nozzle check pattern: ➡ Step1

If the problem is not resolved after performing from step 1 to step 3 twice:

Step4 Clean the print head deeply.

From the printer

- Cleaning the Print Head Deeply

From the computer

- For Windows:
  - Cleaning the Print Heads
- For Mac OS:
  - Cleaning the Print Heads

Note

- When you have performed the procedure until step 4 and the problem has not been resolved, turn off the power and clean the print head deeply again after 24 hours.

  If the problem is still not resolved, the print head may be damaged. Contact the service center.

When the Print Results Are Not Even such as the Ruled Lines Are Misaligned:

Step Align the print head.

From the printer

- Aligning the Print Head

From the computer

- For Windows:
  - Adjusting Print Head Position
- For Mac OS:
  - Adjusting Print Head Position

Printing the Nozzle Check Pattern

Print the nozzle check pattern to determine whether the ink ejects properly from the print head nozzle.

Note

- If the remaining ink level is low, the nozzle check pattern will not be printed correctly. Replace the ink tank whose ink is low.

You need to prepare: a sheet of A4 or Letter-sized plain paper

1. Make sure that the power is turned on.

2. Load a sheet of A4 or Letter-sized plain paper in the cassette.

   After pushing the cassette back, the paper information registration screen is displayed on the touch screen. Select **A4** or **Letter** for **Page size**, then select **Register**.

   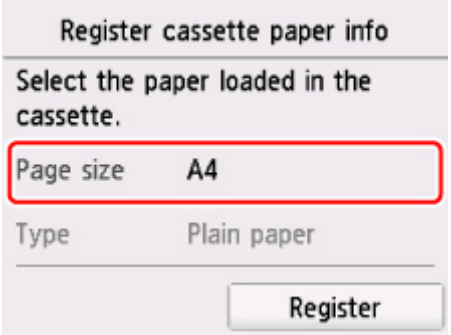

   If a message is displayed on the screen, follow the directions in the message to complete registration.

   Note

   - Be sure to load paper in the cassette. Even if you load paper on the rear tray, the nozzle check pattern is not be printed.

3. Open the operation panel, then pull out the paper output tray.

4. Select **Setup** on the HOME screen.

   Using the Operation Panel

   The setup menu screen will appear.

5. Select **Maintenance**.

   The **Maintenance** screen will appear.

6. Select **Print nozzle check pattern**.

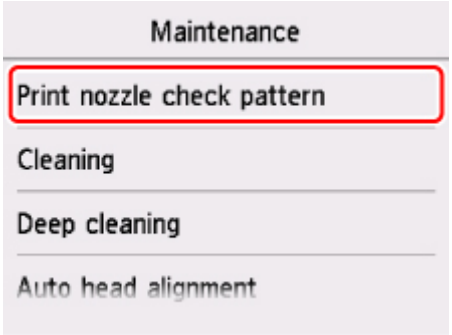

The confirmation screen will appear.

7. Select **Yes**.

   The nozzle check pattern will be printed and two pattern confirmation screens will appear on the touch screen.

8. Examine the nozzle check pattern.

Examining the Nozzle Check Pattern

Examine the nozzle check pattern, and clean the print head if necessary.

1. Check if there are missing lines in the pattern C or horizontal white streaks in the pattern D.

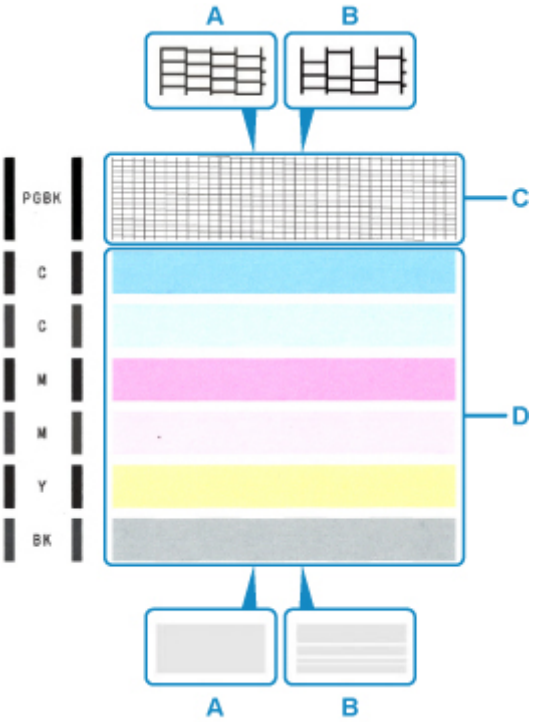

A: No missing lines/No horizontal white streaks

B: Lines are missing/Horizontal white streaks are present

2. Select the pattern that is closer to the printed nozzle check pattern on the confirmation screen.

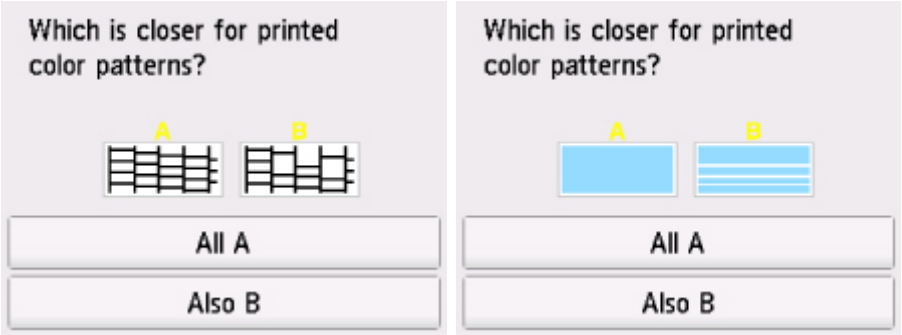

For A (no missing lines or no horizontal white streaks) in both the pattern C and pattern D:

The cleaning is not required. Select **All A**, confirm the message, then select **OK**.

The screen will return to the **Maintenance** screen.

For B (lines are missing or horizontal white streaks are present) in the pattern C or pattern D, or in both patterns:

The cleaning is required. Select **Also B**, then select **Yes** on the cleaning confirmation screen.

The printer starts cleaning the print head.

- Cleaning the Print Head

If the pattern D or any color in the pattern C is not printed:

(Example: Magenta pattern is not printed)

The cleaning is required. Select **Also B**, then select **Yes** on the cleaning confirmation screen.

The printer starts cleaning the print head.

- Cleaning the Print Head

Cleaning the Print Head

Clean the print head if lines are missing or if horizontal white streaks are present in the printed nozzle check pattern. Cleaning unclogs the nozzles and restores the print head condition. Cleaning the print head consumes ink, so clean the print head only when necessary.

You need to prepare: a sheet of A4 or Letter-sized plain paper

1. Make sure that the power is turned on.

2. Load a sheet of A4 or Letter-sized plain paper in the cassette.

   After pushing the cassette back, the paper information registration screen is displayed on the touch screen. Select **A4** or **Letter** for **Page size**, then select **Register**.

   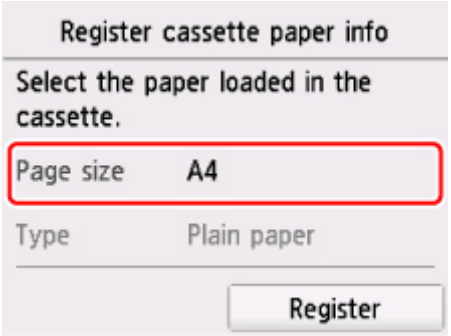

   If a message is displayed on the screen, follow the directions in the message to complete registration.

   Note

   - Be sure to load paper in the cassette. Even if you load paper on the rear tray, the nozzle check pattern is not be printed.

3. Open the operation panel, then pull out the paper output tray.

4. Select **Setup** on the HOME screen.

   Using the Operation Panel

   The setup menu screen will appear.

5. Select **Maintenance**.

   The **Maintenance** screen will appear.

6. Select **Cleaning**.

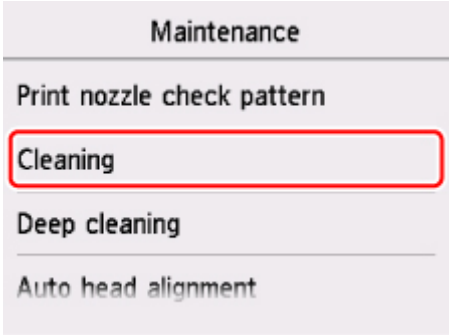

The confirmation screen will appear.

7. Select **Yes**.

   The printer starts cleaning the print head.

   Do not perform any other operations until the printer completes the cleaning of the print head. This takes about 1 minute.

   The pattern print confirmation screen will appear.

8. Select **Yes**.

   The nozzle check pattern will be printed.

9. Examine the nozzle check pattern.

Note

- If the problem is not resolved after cleaning the print head twice, clean the print head deeply.

Deep Print Head Cleaning

If print quality does not improve by the standard cleaning of the print head, clean the print head deeply. Cleaning the print head deeply consumes more ink than the standard cleaning of the print head, so clean the print head deeply only when necessary.

You need to prepare: a sheet of A4 or Letter-sized plain paper

1. Make sure that the power is turned on.

2. Load a sheet of A4 or Letter-sized plain paper in the cassette.

   After pushing the cassette back, the paper information registration screen is displayed on the touch screen. Select **A4** or **Letter** for **Page size**, then select **Register**.

   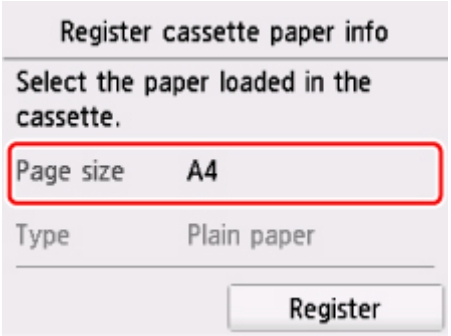

   If a message is displayed on the screen, follow the directions in the message to complete registration.

   Note

   - Be sure to load paper in the cassette. Even if you load paper on the rear tray, the nozzle check pattern is not be printed.

3. Open the operation panel, then pull out the paper output tray.

4. Select **Setup** on the HOME screen.

   Using the Operation Panel

   The setup menu screen will appear.

5. Select **Maintenance**.

   The **Maintenance** screen will appear.

6. Select **Deep cleaning**.

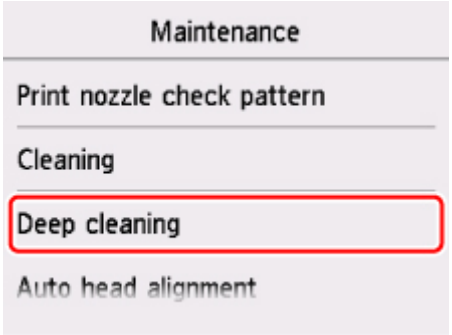

The confirmation screen will appear.

7. Select **Yes**.

   The printer starts cleaning the print head deeply.

   Do not perform any other operations until the printer completes the deep cleaning of the print head. This takes about 1 to 2 minutes.

   The pattern print confirmation screen will appear.

8. Select **Yes**.

   The nozzle check pattern will be printed.

9. When the completion message appears, select **OK**.

10. Examine the nozzle check pattern.

If a particular color is not printed properly, replace the ink tank of that color.

If the problem is not resolved, turn off the power and clean the print head deeply again after 24 hours.

If the problem is still not resolved, the print head may be damaged. Contact the service center.

Aligning the Print Head

If printed ruled lines are misaligned or print results are otherwise unsatisfactory, adjust the print head position.

Note

- If the remaining ink level is low, the print head alignment sheet will not be printed correctly.

  Replace the ink tank whose ink is low.

You need to prepare: a sheet of A4 or Letter-sized plain paper (including recycled paper)*

* Be sure to use paper that is white and clean on both sides.

1. Make sure that the power is turned on.

2. Load a sheet of A4 or Letter-sized plain paper in the cassette.

   After pushing the cassette back, the paper information registration screen is displayed on the touch screen. Select **A4** or **Letter** for **Page size**, then select **Register**.

   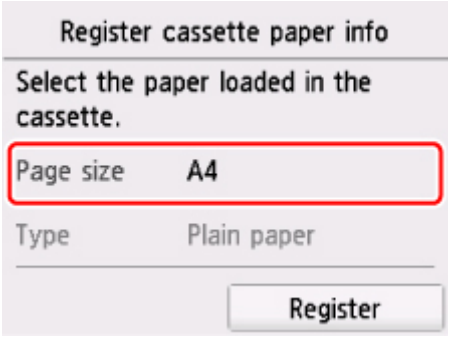

   If a message is displayed on the screen, follow the directions in the message to complete registration.

   Note

   - Be sure to load paper in the cassette. Even if you load paper on the rear tray, the print head alignment sheet is not be printed.

3. Open the operation panel, then pull out the paper output tray.

4. Select **Setup** on the HOME screen.

   Using the Operation Panel

   The setup menu screen will appear.

5. Select **Maintenance**.

   The **Maintenance** screen will appear.

6. Select **Auto head alignment**.

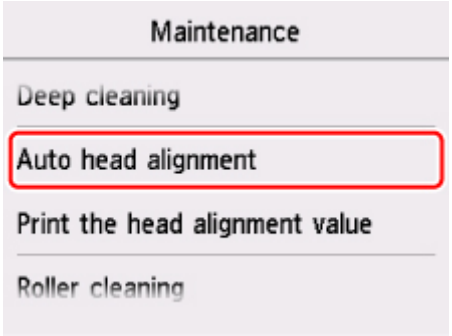

The confirmation screen will appear.

7. Confirm the message, then select **Yes**.

The print head alignment sheet will be printed.

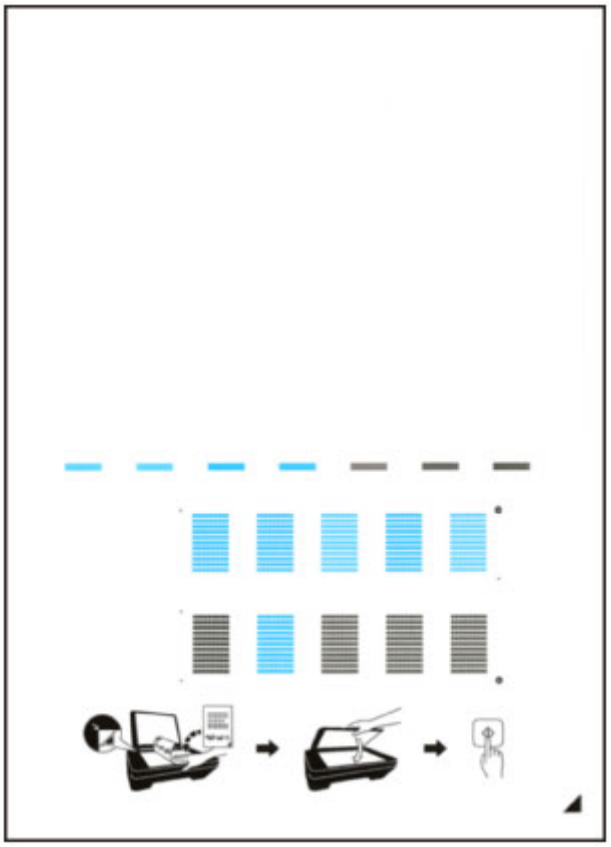

Important

- Do not touch any printed part on the print head alignment sheet. If the sheet is stained or wrinkled, it may not be scanned properly.

8. Confirm the message, then load the print head alignment sheet on the platen glass.

Load the print head alignment sheet WITH THE PRINTED SIDE FACING DOWN and align the mark ◢ on the bottom right corner of the sheet with the alignment mark ⧉.

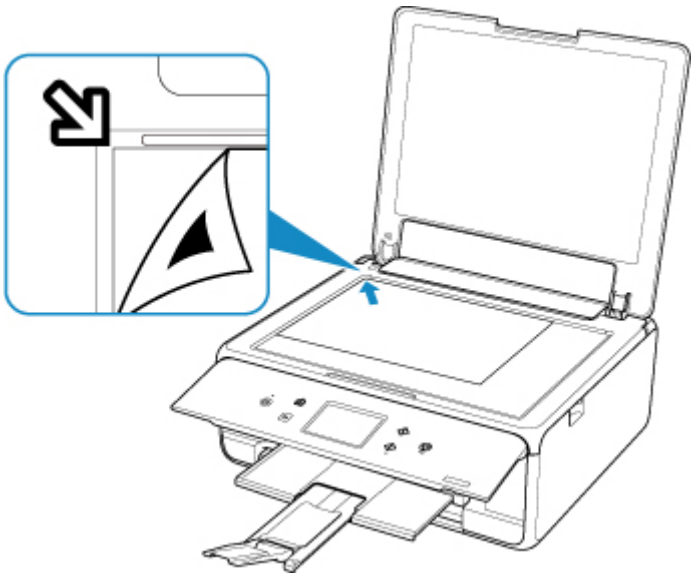

9. Close the document cover gently, then select **OK**.

   The printer starts scanning the print head alignment sheet, and the print head position will be adjusted automatically.

   Important

   - Do not open the document cover or move the print head alignment sheet on the platen glass until adjusting the print head position is complete.
   - If the error message appears on the touch screen, select **OK** to release the error, then take appropriate action.

     An Error Occurs

10. When the completion message appears, select **OK**.

    Remove the print head alignment sheet on the platen glass.

Note

- If the print results are still not satisfactory after adjusting the print head position as described above, adjust the print head position manually from the computer.
  - For Windows:

    Adjusting Print Head Position

  - For Mac OS:

    Adjusting Print Head Position

- To print and check the current head position adjustment values, select **Print the head alignment value** on the **Maintenance** screen.

Performing Maintenance Functions from Your Computer (Mac OS)

- Opening Remote UI for Maintenance
- Cleaning the Print Heads
- Adjusting Print Head Position
- Checking Ink Status from Your Computer

Opening Remote UI for Maintenance

You can perform maintenance of printer and change the settings from a Remote UI.
The following is the procedure to open a Remote UI.

1. Open **System Preferences**, and select **Printers & Scanners**

2. Select your model from the printer list, and click **Options & Supplies...**

3. Click **Show Printer Webpage...** in **General** tab

   Remote UI starts.

   Note

   - The password may have to be entered after Remote UI starts. In such a case, enter the password and click **OK**. In case you do not know the password, click **About password and cookies**.

Related Topics

- Cleaning the Print Heads
- Adjusting Print Head Position
- Checking Ink Status from Your Computer
- Printing a Nozzle Check Pattern
- Managing the Printer Power
- Changing the Printer Operation Mode
- Reducing the Printer Noise

Cleaning the Print Heads

The print head cleaning function allows you to clear up clogged print head nozzle. Perform print head cleaning if printing is faint or a specific color fails to print, even though there is enough ink.

Cleaning

1. Select **Utilities** from Remote UI

2. Click **Cleaning**

   Before running the cleaning, check the following items:

   Check whether the printer is on and open the printer's cover.
   Check the following items for each ink. Then, if necessary, perform **Cleaning**.

   - Is there ink remaining in the tank?
   - Did you push in the ink tank completely until you heard a clicking sound?
   - If the orange tape is there, has it been peeled off completely?
     Any remaining tape will hinder ink output.
   - Did you install the ink tanks in their correct positions?

3. Execute cleaning

   Make sure that the printer is on and then click **Yes**.

   Print head cleaning starts.

4. Complete cleaning

   Next, the message for nozzle check pattern printing is displayed.

5. Check the results

   To check whether the print quality has improved, click **Yes**. To cancel the check process, click **No**.

   If cleaning the head once does not resolve the print head problem, clean it once more.

Important

- **Cleaning** consumes a small amount of ink.
  Cleaning the print head frequently will rapidly deplete your printer's ink supply. Consequently, perform cleaning only when necessary.

Deep cleaning

Deep cleaning is more thorough than cleaning. Perform deep cleaning when two **Cleaning** attempts do not resolve the print head problem.

1. Select **Utilities** from Remote UI

2. Click **Deep cleaning**

Before running the deep cleaning, check the following items:

Check whether the printer is on and open the printer's cover.
Check the following items for each ink. Then, if necessary, perform **Deep cleaning**.

- Is there ink remaining in the tank?
- Did you push in the ink tank completely until you heard a clicking sound?
- If the orange tape is there, has it been peeled off completely?
  Any remaining tape will hinder ink output.
- Did you install the ink tanks in their correct positions?

3. Execute deep cleaning

   Make sure that the printer is on and then click **Yes**.

   Print head deep cleaning starts.

4. Complete deep cleaning

   Next, the message for nozzle check pattern printing is displayed.

5. Check the results

   To check whether the print quality has improved, click **Yes**. To cancel the check process, click **No**.

Important

- **Deep cleaning** consumes a larger amount of ink than **Cleaning**.
  Cleaning the print head frequently will rapidly deplete your printer's ink supply. Consequently, perform cleaning only when necessary.

Note

- If there is no sign of improvement after **Deep cleaning**, turn off the printer, wait 24 hours, and then perform **Deep cleaning** again. If there is still no sign of improvement, the ink may have run out or the print head may be worn. For details on the remedial action to be taken, see "No Ink Comes Out."

Related Topic

- Printing a Nozzle Check Pattern

Adjusting Print Head Position

Any error in the print head installation position can cause color and line shifts. Adjusting the print head position improves print results.

Auto head alignment

1. Select **Utilities** from Remote UI

2. Click **Auto head alignment**

   A message appears.

3. Load paper in printer

   In the cassette, load 1 sheet of plain A4-sized or Letter-sized paper.

4. Run head position adjustment

   Check that the printer power is on, and then click **Yes**.
   Head alignment starts. Proceed with the operations in accordance with the messages on the screen.

   Important

   - While the printer is printing, do not open the printer scanning unit / cover.

Note

- You can print and check the current settings by clicking on **Print the head alignment value**.

Checking Ink Status from Your Computer

You can check the detailed information such as the remaining ink level and the ink tank types of your model.

If you select **Printer status** from Remote UI, the ink status appears as an illustration.

Estimated ink levels

You can check the types and levels of ink.
When ink levels are running low or an error occurs because there is no ink, a notification icon will appear.

Ink number

You can look up the correct ink tank for your printer.

Note

- To check the ink status, you can also display the pop-up menu of the Print dialog and select **Supply Levels**.

Cleaning

- Cleaning Exterior Surfaces
- Cleaning the Platen Glass and Document Cover
- Cleaning Paper Feed Rollers
- Cleaning Inside the Printer (Bottom Plate Cleaning)
- Cleaning Cassette Pads

Cleaning Paper Feed Rollers

If the paper feed roller is dirty or paper powder is attached to it, paper may not be fed properly.

In this case, clean the paper feed roller. Cleaning will wear out the paper feed roller, so perform this only when necessary.

You need to prepare: three sheets of A4 or Letter-sized plain paper

1. Make sure that the power is turned on.

2. Select **Setup** on the HOME screen.

   Using the Operation Panel

   The setup menu screen will appear.

3. Select **Maintenance**.

   The **Maintenance** screen will appear.

4. Select **Roller cleaning**.

   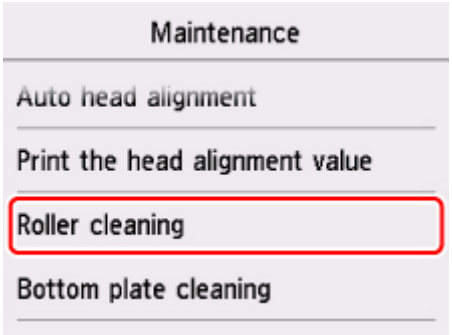

   The confirmation screen will appear.

5. Select **Yes**.

6. Select **Rear tray** or **Cassette** to clean the paper feed roller.

7. Follow the message to remove any paper from the paper source.

   If you clean the paper feed roller of cassette, remove any paper from the cassette, then push it back.

8. Select **OK**.

   The paper feed roller will rotate as it is cleaned without paper.

9. Make sure that the paper feed roller has stopped rotating, then follow the message to load the three sheets of A4 or Letter-sized plain paper.

10. Open the operation panel, then pull out the paper output tray.

11. Select **OK**.

    The printer starts cleaning. The cleaning will be complete when the paper is ejected.

12. When the completion message appears, select **OK**.

If the problem is not resolved after cleaning the paper feed roller, contact the service center.

Cleaning Inside the Printer (Bottom Plate Cleaning)

Remove stains from the inside of the printer. If the inside of the printer becomes dirty, printed paper may get dirty, so we recommend performing cleaning regularly.

You need to prepare: a sheet of A4 or Letter-sized plain paper*

* Be sure to use a new piece of paper.

1. Make sure that the power is turned on.

2. Open the operation panel, then pull out the paper output tray.

3. Select **Setup** on the HOME screen.

   Using the Operation Panel

   The setup menu screen will appear.

4. Select **Maintenance**.

   The **Maintenance** screen will appear.

5. Select **Bottom plate cleaning**.

   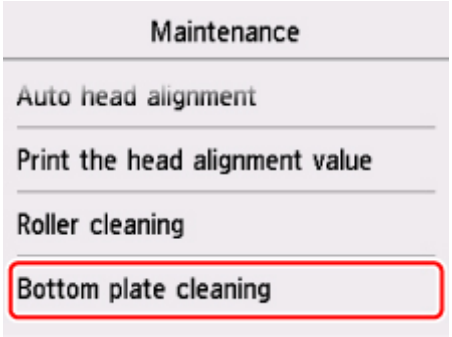

   The confirmation screen will appear.

6. Select **Yes**.

7. Follow the message to remove any paper from the cassette, then select **OK**.

8. Fold a single sheet of A4 or Letter-sized plain paper in half widthwise, then unfold the paper.

9. Fold one side of the opened paper in another half, aligning the edge with the center crease, unfold the paper, then select **OK**.

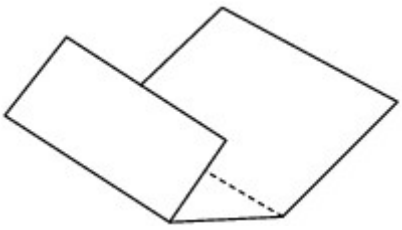

10. Load only this sheet of paper in the cassette with the ridges of the creases facing up and the edge of the half with no crease facing to the far side.

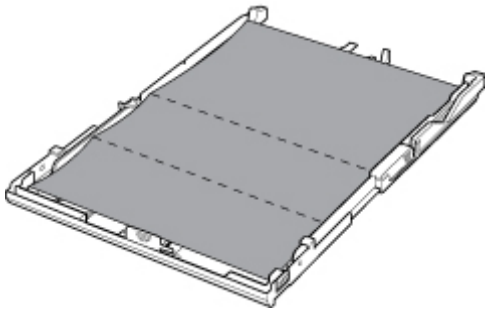

11. Mount the cassette cover, and then insert the cassette into the printer.

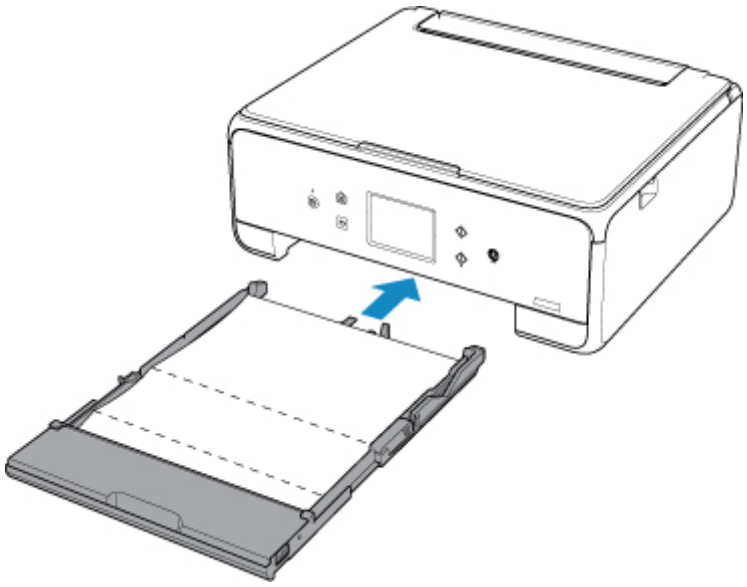

12. Open the operation panel, then pull out the paper output tray.

13. Select **OK**.

    The paper cleans the inside of the printer as it feeds through the printer.

    Check the folded parts of the ejected paper. If they are smudged with ink, perform Bottom Plate Cleaning again.

14. When the completion message appears, select **OK**.

Note

- When performing Bottom Plate Cleaning again, be sure to use a new piece of paper.

If the problem is not resolved after performing cleaning again, the protrusions inside the printer may be stained. Wipe off any ink from the protrusions using a cotton swab or the like.

Important

- Be sure to turn off the power and unplug the power cord before cleaning the printer.

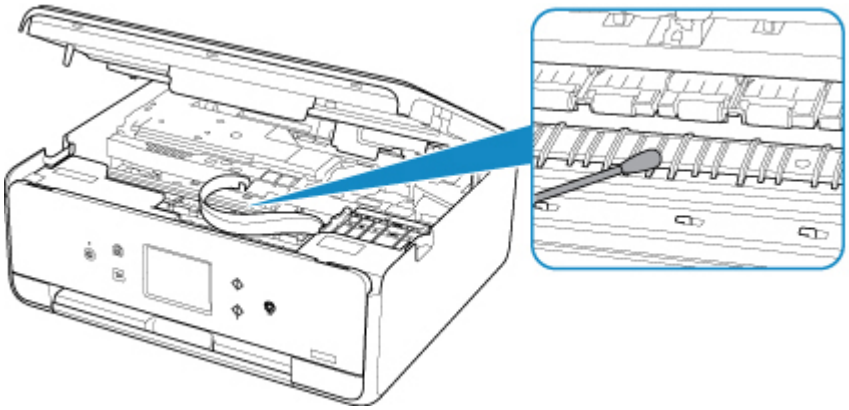

Overview

- **Safety**
  - Safety Precautions
  - Regulatory Information
  - WEEE (EU & EEA)
- **Handling Precautions**
  - Canceling Print Jobs
  - Legal Restrictions on Scanning/Copying
  - Printer Handling Precautions
  - Transporting Your Printer
  - When repairing, lending, or disposing of the printer
  - Keeping Print Quality High
- **Main Components and Their Use**
  - Main Components
  - Power Supply
  - Using the Operation Panel
- **Changing Settings**
  - Changing Printer Settings from Your Computer (Windows)
  - Changing Printer Settings from Your Computer (Mac OS)
  - Changing Settings from Operation Panel
- **Specifications**

Safety

- Safety Precautions
- Regulatory Information
- WEEE (EU&EEA)

Safety Precautions

Choosing a location

- Do not install the printer in a location that is unstable or subject to excessive vibration.
- Do not install the printer in locations that are very humid or dusty, in direct sunlight, outdoors, or close to a heating source.
  To avoid the risk of fire or electric shocks, use the printer under the operating environment specified in the Specifications.
- Do not place the printer on a thick rug or carpet.
- Do not place the printer with its back attached to the wall.

Power Supply

- Ensure that the area around the power outlet is kept clear at all times so you can easily unplug the power cord if necessary.
- Never remove the plug by pulling on the cord.
  Pulling the cord may damage the power cord, leading to possible fire or electrical shock.
- Do not use an extension lead/cord.

Working Around the Printer

- Never put your hands or fingers in the printer while it is printing.
- When moving the printer, carry the printer at both ends. In case the printer weighs more than 14 kg, it is recommended to have two people lifting the printer. Accidental dropping of the printer may cause injury. For the printer's weight, refer to the Specifications.
- Do not place any object on the printer. Especially do not place metal objects (paper clips, staples, etc.) or containers of flammable solvents (alcohol, thinners, etc.) on top of the printer.
- Do not transport or use the printer on a slant, vertically or upside-down, as the ink may leak and damage the printer.
- When loading a thick book on the platen glass, do not press hard on the Document Cover. The platen glass may break and cause injury.

Print Heads/Ink Tanks/FINE Cartridges

- Keep ink tanks out of the reach of children. In case ink is accidentally licked or swallowed, rinse out mouth or give one or two glasses of water to drink. If irritation or discomfort occurs, obtain medical advice immediately.
- In case ink gets in contact with eyes, rinse with water immediately. In case ink gets in contact with skin, wash with soap and water immediately. If irritation to eyes or skin persists, obtain medical advice immediately.
- Never touch the electrical contacts on a print head or FINE cartridges after printing.
  The metal parts may be very hot and could cause burns.
- Do not throw ink tanks and FINE cartridges into fire.
- Do not attempt to disassemble or modify the print head, ink tanks, and FINE cartridges.

Regulatory Information

Users in the U.S.A.

FCC Notice (U.S.A. Only)
For 120V, 60Hz model
Model Number: K10457 (Contains FCC Approved WLAN Module K30365, FCC Approved Bluetooth K30375)

This device complies with Part 15 of the FCC Rules. Operation is subject to the following two conditions: (1) This device may not cause harmful interference, and (2) this device must accept any interference received, including interference that may cause undesired operation.

Note: This equipment has been tested and found to comply with the limits for a Class B digital device, pursuant to Part 15 of the FCC Rules. These limits are designed to provide reasonable protection against harmful interference in a residential installation. This equipment generates, uses and can radiate radio frequency energy and, if not installed and used in accordance with the instructions, may cause harmful interference to radio communications.
However, there is no guarantee that interference will not occur in a particular installation. If this equipment does cause harmful interference to radio or television reception, which can be determined by turning the equipment off and on, the user is encouraged to try to correct the interference by one or more of the following measures:

- Reorient or relocate the receiving antenna.
- Increase the separation between the equipment and receiver.
- Connect the equipment into an outlet on a circuit different from that to which the receiver is connected.
- Consult the dealer or an experienced radio/TV technician for help.

Use of a shielded cable is required to comply with Class B limits in Subpart B of Part 15 of the FCC Rules.

Do not make any changes or modifications to the equipment unless otherwise specified in the manual. If such changes or modifications should be made, you could be required to stop operation of the equipment.

FCC ID:AZDK30365, AZDK30375

Changes or modifications not expressly approved by the party responsible for compliance could void the user's authority to operate equipment.

This transmitter must not be co-located or operating in conjunction with any other antenna or transmitter.

The equipment complies with FCC radiation exposure limits for at uncontrolled equipment. This equipment should be installed and operated with minimum distance at least 20cm between the radiator and persons body (excluding extremities: hands, wrists, feet and ankles) and must not be colocated or operated with any other antenna or transmitter.

Canon U.S.A., Inc.
One Canon Park
Melville, New York 11747
1-800-652-2666

About Radio Waves

Do not use this product near medical equipment or electronic equipment. Radio wave interference can affect the operation or performance of the equipment.

Users in Canada

This device complies with Industry Canada license-exempt RSS standard(s). Operation is subject to the following two conditions:

(1) this device may not cause interference, and (2) this device must accept any interference, including interference that may cause undesired operation of the device.

This equipment complies with IC radiation exposure limits set forth for an uncontrolled environment and meets RSS-102 of the IC radio frequency (RF) Exposure rules. This equipment should be installed and operated keeping the radiator at least 20cm or more away from person's body (excluding extremities: hands, wrists, feet and ankles).

Pour les usagers résidant au Canada

Le présent appareil est conforme aux CNR d'Industrie Canada applicables aux appareils radio exempts de licence. L'exploitation est autorisée aux deux conditions suivantes :

(1) l'appareil ne doit pas produire de brouillage, et (2) l'utilisateur de l'appareil doit accepter tout brouillage radioélectrique subi, même si le brouillage est susceptible d'en compromettre le fonctionnement.

Cet équipement est conforme aux limites d'exposition aux rayonnements énoncées pour un environnement non contrôlé et respecte les règles d'exposition aux fréquences radioélectriques (RF) CNR-102 de l'IC. Cet équipement doit être installé et utilisé en gardant une distance de 20 cm ou plus entre le dispositif rayonnant et le corps (à l'exception des extrémités : mains, poignets, pieds et chevilles).

Environmental Information

Reducing your environmental impact

Power Consumption and Operational Modes

The amount of electricity a device consumes depends on the way the device is used. This product is designed and set in a way to allow you to reduce the power consumption. After the last print it switches to Ready Mode. In this mode it can print again immediately if required. If the product is not used for a time, the device switches to its Sleep Mode. The devices consume less power (Watt) in these modes.

Energy Star®

The Energy Star® programme is a voluntary scheme to promote the development and purchase of energy efficient models, which help to minimise environmental impact.
Products which meet the stringent requirements of the Energy Star® programme for both environmental benefits and the amount of energy consumption will carry the Energy Star® logo accordingly.

Paper types

This product can be used to print on both recycled and virgin paper (certified to an environmental stewardship scheme), which complies with EN12281 or a similar quality standard. In addition it can support printing on media down to a weight of 64g/m^2, lighter paper means less resources used and a lower environmental footprint for your printing needs.

WEEE (EU&EEA)

Only for European Union and EEA (Norway, Iceland and Liechtenstein)

This symbol indicates that this product is not to be disposed of with your household waste, according to the WEEE Directive (2012/19/EU) and national legislation. This product should be handed over to a designated collection point, e.g., on an authorized one-for-one basis when you buy a new similar product or to an authorized collection site for recycling waste electrical and electronic equipment (EEE). Improper handling of this type of waste could have a possible negative impact on the environment and human health due to potentially hazardous substances that are generally associated with EEE. At the same time, your cooperation in the correct disposal of this product will contribute to the effective usage of natural resources. For more information about where you can drop off your waste equipment for recycling, please contact your local city office, waste authority, approved WEEE scheme or your household waste disposal service. For more information regarding return and recycling of WEEE products, please visit www.canon-europe.com/weee.

Nur für Europäische Union und EWR (Norwegen, Island und Liechtenstein)

Dieses Symbol weist darauf hin, dass dieses Produkt gemäß der EU-Richtlinie über Elektro- und Elektronik-Altgeräte (2012/19/EU) und nationalen Gesetzen nicht über den Hausmüll entsorgt werden darf. Dieses Produkt muss bei einer dafür vorgesehenen Sammelstelle abgegeben werden. Dies kann z. B. durch Rückgabe beim Kauf eines ähnlichen Produkts oder durch Abgabe bei einer autorisierten Sammelstelle für die Wiederaufbereitung von Elektro- und Elektronik-Altgeräten geschehen. Der unsachgemäße Umgang mit Altgeräten kann aufgrund potentiell gefährlicher Stoffe, die generell mit Elektro- und Elektronik-Altgeräten in Verbindung stehen, negative Auswirkungen auf die Umwelt und die menschliche Gesundheit haben. Durch die umweltgerechte Entsorgung dieses Produkts tragen Sie außerdem zu einer effektiven Nutzung natürlicher Ressourcen bei. Informationen zu Sammelstellen für Altgeräte erhalten Sie bei Ihrer Stadtverwaltung, dem öffentlich-rechtlichen Entsorgungsträger, einer autorisierten Stelle für die Entsorgung von Elektro- und Elektronik-Altgeräten oder Ihrem örtlichen Entsorgungsunternehmen. Weitere Informationen zur Rückgabe und Entsorgung von Elektro- und Elektronik-Altgeräten finden Sie unter www.canon-europe.com/weee.

Union Européenne, Norvège, Islande et Liechtenstein uniquement.

Ce symbole indique que ce produit ne doit pas être jeté avec les ordures ménagères, conformément à la directive DEEE (2012/19/UE) et à la réglementation de votre pays. Ce produit doit être confié au distributeur à chaque fois que vous achetez un produit neuf similaire, ou à un point de collecte mis en

place par les collectivités locales pour le recyclage des Déchets des Équipements Électriques et Électroniques (DEEE). Le traitement inapproprié de ce type de déchet risque d'avoir des répercussions sur l'environnement et la santé humaine, du fait de la présence de substances potentiellement dangereuses généralement associées aux équipements électriques et électroniques. Parallèlement, votre entière coopération dans le cadre de la mise au rebut correcte de ce produit favorisera une meilleure utilisation des ressources naturelles. Pour plus d'informations sur les points de collecte des équipements à recycler, contactez vos services municipaux, les autorités locales compétentes, le plan DEEE approuvé ou le service d'enlèvement des ordures ménagères. Pour plus d'informations sur le retour et le recyclage des produits DEEE, consultez le site: www.canon-europe.com/weee.

Uitsluitend bestemd voor de Europese Unie en EER (Noorwegen, IJsland en Liechtenstein)

Dit symbool geeft aan dat dit product in overeenstemming met de AEEA-richtlijn (2012/19/EU) en de nationale wetgeving niet mag worden afgevoerd met het huishoudelijk afval. Dit product moet worden ingeleverd bij een aangewezen, geautoriseerd inzamelpunt, bijvoorbeeld wanneer u een nieuw gelijksoortig product aanschaft, of bij een geautoriseerd inzamelpunt voor hergebruik van elektrische en elektronische apparatuur (EEA). Een onjuiste afvoer van dit type afval kan leiden tot negatieve effecten op het milieu en de volksgezondheid als gevolg van potentieel gevaarlijke stoffen die veel voorkomen in elektrische en elektronische apparatuur (EEA). Bovendien werkt u door een juiste afvoer van dit product mee aan het effectieve gebruik van natuurlijke hulpbronnen. Voor meer informatie over waar u uw afgedankte apparatuur kunt inleveren voor recycling kunt u contact opnemen met het gemeentehuis in uw woonplaats, de reinigingsdienst, of het afvalverwerkingsbedrijf. U kunt ook het schema voor de afvoer van afgedankte elektrische en elektronische apparatuur (AEEA) raadplegen. Ga voor meer informatie over het inzamelen en recyclen van afgedankte elektrische en elektronische apparatuur naar www.canon-europe.com/weee.

Sólo para la Unión Europea y el Área Económica Europea (Noruega, Islandia y Liechtenstein)

Este símbolo indica que este producto no debe desecharse con los desperdicios domésticos, de acuerdo con la directiva RAEE (2012/19/UE) y con la legislación nacional. Este producto debe entregarse en uno de los puntos de recogida designados, como por ejemplo, entregándolo en el lugar de venta al comprar un producto similar o depositándolo en un lugar de recogida autorizado para el reciclado de residuos de aparatos eléctricos y electrónicos (RAEE). La manipulación inapropiada de este tipo de desechos podría tener un impacto negativo en el entorno y la salud humana, debido a las sustancias potencialmente peligrosas que normalmente están asociadas con los RAEE. Al mismo tiempo, su cooperación a la hora de desechar correctamente este producto contribuirá a la utilización eficazde los recursos naturales. Para más información sobre cómo puede eliminar el equipo para su reciclado, póngase en contacto con las autoridades locales, con las autoridades encargadas de los desechos, con un sistema de gestión RAEE

autorizado o con el servicio de recogida de basuras doméstico. Si desea más información acerca de la devolución y reciclado de RAEE, visite la web www.canon-europe.com/weee.

Només per a la Unió Europea i a l'Espai Econòmic Europeu (Noruega, Islàndia i Liechtenstein)

Aquest símbol indica que aquest producte no s'ha de llençar a les escombraries de la llar, d'acord amb la Directiva RAEE (2012/19/UE) i la legislació nacional. Aquest producte s'hauria de lliurar en un dels punts de recollida designats, com per exemple, intercanviant-lo un per un en comprar un producte similar o lliurant-lo en un lloc de recollida autoritzat per al reciclatge de residus d'aparells elèctrics i electrònics (AEE). La manipulació inadequada d'aquest tipus de residus podria tenir un impacte negatiu en l'entorn i en la salut humana, a causa de les substàncies potencialment perilloses que normalment estan associades als AEE. Així mateix, la vostra cooperació a l'hora de llençar correctament aquest producte contribuirà a la utilització efectiva dels recursos naturals. Per a més informació sobre els punts on podeu lliurar aquest producte per procedir al seu reciclatge, adreceu-vos a la vostra oficina municipal, a les autoritats encarregades dels residus, al pla de residus homologat per la RAEE o al servei de recollida de deixalles domèstiques de la vostra localitat. Per a més informació sobre la devolució i el reciclatge de productes RAEE, visiteu www.canon-europe.com/weee.

Solo per Unione Europea e SEE (Norvegia, Islanda e Liechtenstein)

Questo simbolo indica che il prodotto deve essere oggetto di raccolta separata in conformità alla Direttiva RAEE (2012/19/UE) e alla normativa locale vigente. Il prodotto deve essere smaltito presso un centro di raccolta differenziata, un distributore autorizzato che applichi il principio dell'"uno contro uno", ovvero del ritiro della vecchia apparecchiatura elettrica al momento dell'acquisto di una nuova, o un impianto autorizzato al riciclaggio dei rifiuti di apparecchiature elettriche ed elettroniche. La gestione impropria di questo tipo di rifiuti può avere un impatto negativo sull'ambiente e sulla salute umana causato dalle sostanze potenzialmente pericolose che potrebbero essere contenute nelle apparecchiature elettriche ed elettroniche. Un corretto smaltimento di tali prodotti contribuirà inoltre a un uso efficace delle risorse naturali ed eviterà di incorrere nelle sanzioni amministrative di cui all'art. 255 e successivi del Decreto Legislativo n. 152/06. Per ulteriori informazioni sullo smaltimento e il recupero dei Rifiuti di Apparecchiature Elettriche ed Elettroniche, consultare la Direttiva RAEE, rivolgersi alle autorità competenti, oppure visitare il sito www.canon-europe.com/weee.

Apenas para a União Europeia e AEE (Noruega, Islândia e Liechtenstein)

Este símbolo indica que o produto não deve ser colocado no lixo doméstico, de acordo com a Directiva REEE (2012/19/UE) e a legislação nacional. Este produto deverá ser colocado num ponto de recolha designado, por exemplo, num local próprio autorizado quando adquirir um produto semelhante novo ou num local de recolha autorizado para reciclar resíduos de equipamentos eléctricos e electrónicos (EEE). O tratamento inadequado deste tipo de resíduo poderá causar um impacto negativo no ambiente e na saúde humana devido às substâncias potencialmente perigosas normalmente associadas aos equipamentos eléctricos e electrónicos. Simultaneamente, a sua cooperação no tratamento correcto deste produto contribuirá para a utilização eficaz dos recursos naturais. Para mais informações sobre os locais onde o equipamento poderá ser reciclado, contacte os serviços locais, a autoridade responsável pelos resíduos, o esquema REEE aprovado ou o serviço de tratamento de lixo doméstico. Para mais informações sobre a devolução e reciclagem de produtos REEE, vá a www.canon-europe.com/weee.

Gælder kun i Europæiske Union og EØS (Norge, Island og Liechtenstein)

Dette symbol angiver, at det pågældende produkt ikke må bortskaffes sammen med dagrenovation jf. direktivet om affald af elektrisk og elektronisk udstyr (WEEE) (2012/19/EU) og gældende national lovgivning. Det pågældende produkt skal afleveres på et nærmere specificeret indsamlingssted, f.eks. i overensstemmelse med en godkendt én-til-én-procedure, når du indkøber et nyt tilsvarende produkt, eller produktet skal afleveres på et godkendt indsamlingssted for elektronikaffald. Forkert håndtering af denne type affald kan medføre negative konsekvenser for miljøet og menneskers helbred på grund af de potentielt sundhedsskadelige stoffer, der generelt kan forefindes i elektrisk og elektronisk udstyr. Når du foretager korrekt bortskaffelse af det pågældende produkt, bidrager du til effektiv brug af naturressourcerne. Yderligere oplysninger om, hvor du kan bortskaffe dit elektronikaffald med henblik på genanvendelse, får du hos de kommunale renovationsmyndigheder. Yderligere oplysninger om returnering og genanvendelse af affald af elektrisk og elektronisk udstyr får du ved at besøge www.canon-europe.com/weee.

Μόνο για την Ευρωπαϊκή Ένωση και τον ΕΟΧ (Νορβηγία, Ισλανδία και Λιχτενστάιν)

Αυτό το σύμβολο υποδηλώνει ότι αυτό το προϊόν δεν πρέπει να απορρίπτεται μαζί με τα οικιακά απορρίμματα, σύμφωνα με την Οδηγία σχετικά με τα Απόβλητα Ηλεκτρικού και Ηλεκτρονικού Εξοπλισμού (ΑΗΗΕ) (2012/19/ΕΕ) και την εθνική σας νομοθεσία. Αυτό το προϊόν πρέπει να παραδίδεται σε καθορισμένο σημείο συλλογής, π.χ. σε μια εξουσιοδοτημένη βάση ανταλλαγής όταν αγοράζετε ένα νέο παρόμοιο προϊόν ή σε μια εξουσιοδοτημένη θέση συλλογής για την ανακύκλωση των αποβλήτων Ηλεκτρικού και Ηλεκτρονικού Εξοπλισμού (ΗΗΕ). Ο ακατάλληλος χειρισμός αυτού του τύπου αποβλήτων μπορεί να έχει αρνητικό αντίκτυπο στο περιβάλλον και την υγεία του ανθρώπου, λόγω δυνητικώς επικίνδυνων ουσιών που γενικά συνδέονται με τον ΗΗΕ. Ταυτόχρονα, η συνεργασία σας όσον αφορά τη σωστή απόρριψη αυτού του προϊόντος θα συμβάλει στην αποτελεσματική χρήση των φυσικών πόρων. Για περισσότερες πληροφορίες σχετικά με τα σημεία όπου μπορείτε να απορρίψετε τον εξοπλισμό σας για

ανακύκλωση, επικοινωνήστε με το τοπικό γραφείο της πόλης σας, την υπηρεσία απορριμμάτων, το εγκεκριμένο σχήμα ΑΗΗΕ ή την υπηρεσία απόρριψης οικιακών αποβλήτων. Για περισσότερες πληροφορίες σχετικά με την επιστροφή και την ανακύκλωση των προϊόντων ΑΗΗΕ, επισκεφθείτε την τοποθεσία www.canon-europe.com/weee.

Gjelder kun den europeiske union og EØS (Norge, Island og Liechtenstein)

Dette symbolet indikerer at dette produktet ikke skal kastes sammen med husholdningsavfall, i henhold til WEEE-direktiv (2012/19/EU) og nasjonal lov. Produktet må leveres til et dertil egnet innsamlingspunkt, det vil si på en autorisert en-til-en-basis når du kjøper et nytt lignende produkt, eller til et autorisert innsamlingssted for resirkulering av avfall fra elektrisk og elektronisk utstyr (EE-utstyr). Feil håndtering av denne typen avfall kan være miljø- og helseskadelig på grunn av potensielt skadelige stoffer som ofte brukes i EE-utstyr. Samtidig bidrar din innsats for korrekt avhending av produktet til effektiv bruk av naturressurser. Du kan få mer informasjon om hvor du kan avhende utrangert utstyr til resirkulering ved å kontakte lokale myndigheter, et godkjent WEEE-program eller husholdningens renovasjonsselskap. Du finner mer informasjon om retur og resirkulering av WEEE-produkter på www.canon-europe.com/weee.

Vain Euroopan unionin sekä ETA:n (Norja, Islanti ja Liechtenstein) alueelle.

Tämä tunnus osoittaa, että sähkö- ja elektroniikkalaiteromua koskeva direktiivi (SER-direktiivi, 2012/19/EU) sekä kansallinen lainsäädäntö kieltävät tuotteen hävittämisen talousjätteen mukana. Tuote on vietävä asianmukaiseen keräyspisteeseen, esimerkiksi kodinkoneliikkeeseen uutta vastaavaa tuotetta ostettaessa tai viralliseen sähkö- ja elektroniikkalaiteromun keräyspisteeseen. Sähkö- ja elektroniikkalaiteromun virheellinen käsittely voi vahingoittaa ympäristöä ja ihmisten terveyttä, koska laitteet saattavat sisältää ympäristölle ja terveydelle haitallisia aineita. Lisäksi tuotteen asianmukainen hävittäminen säästää luonnonvaroja. Lisätietoja sähkö- ja elektroniikkalaiteromun keräyspisteistä saat kaupunkien ja kuntien tiedotuksesta, jätehuoltoviranomaisilta, sähkö- ja elektroniikkalaiteromun kierrätysjärjestelmän ylläpitäjältä ja jätehuoltoyhtiöltä. Lisätietoja sähkö- ja elektroniikkalaiteromun keräyksestä ja kierrätyksestä on osoitteessa www.canon-europe.com/weee.

Endast för Europeiska unionen och EES (Norge, Island och Liechtenstein)

Den här symbolen visar att produkten enligt WEEE-direktivet (2012/19/EU) och nationell lagstiftning inte får sorteras och slängas som hushållsavfall. Den här produkten ska lämnas in på en därför avsedd insamlingsplats, t.ex. på en återvinningsstation auktoriserad att hantera elektrisk och elektronisk utrustning (EE-utrustning) eller hos handlare som är auktoriserade att byta in varor då nya, motsvarande

köps (en mot en). Olämplig hantering av avfall av den här typen kan ha en negativ inverkan på miljön och människors hälsa på grund av de potentiellt farliga ämnen som kan återfinnas i elektrisk och elektronisk utrustning. Din medverkan till en korrekt avfallshantering av den här produkten bidrar dessutom till en effektiv användning av naturresurserna. Kontakta ditt lokala kommunkontor, berörd myndighet, företag för avfallshantering eller ta del av en godkänd WEEE-organisation om du vill ha mer information om var du kan lämna den kasserade produkten för återvinning. För mer information om inlämning och återvinning av WEEE-produkter, se www.canon-europe.com/weee.

Pouze Evropská unie a EHP (Norsko, Island a Lichtenštejnsko)

Tento symbol znamená, že podle směrnice o OEEZ (2012/19/EU) a podle vnitrostátních právních předpisů nemá být tento výrobek likvidován s odpadem z domácností. Tento výrobek má být vrácen do sběrného místa, např. v rámci autorizovaného systému odběru jednoho výrobku za jeden nově prodaný podobný výrobek nebo v autorizovaném sběrném místě pro recyklaci odpadních elektrických a elektronických zařízení (OEEZ). Nevhodné nakládání s tímto druhem odpadu by mohlo mít negativní dopad na životní prostředí a lidské zdraví, protože elektrická a elektronická zařízení zpravidla obsahují potenciálně nebezpečné látky. Vaše spolupráce na správné likvidaci tohoto výrobku současně napomůže efektivnímu využívání přírodních zdrojů. Další informace o místech sběru vašeho odpadního zařízení k recyklaci vám sdělí místní úřad vaší obce, správní orgán vykonávající dozor nad likvidací odpadu, sběrny OEEZ nebo služba pro odvoz komunálního odpadu. Další informace týkající se vracení a recyklace OEEZ naleznete na adrese www.canon-europe.com/weee.

Csak az Európai Unió és az EGT (Norvégia, Izland és Liechtenstein) országaiban

Ez a szimbólum azt jelzi, hogy a helyi törvények és a WEEE-irányelv (2012/19/EU) szerint a termék nem kezelhető háztartási hulladékként. A terméket a kijelölt nyilvános gyűjtőpontokon kell leadni, például hasonló cserekészülék vásárlásakor, illetve bármelyik, elektromos és elektronikai berendezésekből származó hulladék (WEEE) átvételére feljogosított gyűjtőponton. Az ilyen jellegű hulladékok a nem megfelelő kezelés esetén a bennük található veszélyes anyagok révén ártalmasak lehetnek a környezetre és az emberek egészségére. Továbbá, a termékből származó hulladék megfelelő kezelésével hozzájárulhat a természetes nyersanyagok hatékonyabb hasznosításához. A berendezésekből származó, újrahasznosítható hulladékok elhelyezésére vonatkozó további tudnivalókért forduljon a helyi önkormányzathoz, a közterület-fenntartó vállalathoz, a háztartási hulladék begyűjtését végző vállalathoz, illetve a hivatalos WEEE-képviselethez. További tudnivalókat a WEEE-termékek visszajuttatásáról és újrahasznosításáról a www.canon-europe.com/weee.

Tylko dla krajów Unii Europejskiej oraz EOG (Norwegia, Islandia i Liechtenstein)

Ten symbol oznacza, że zgodnie z dyrektywą WEEE dotyczącą zużytego sprzętu elektrycznego i elektronicznego (2012/19/UE) oraz przepisami lokalnymi nie należy wyrzucać tego produktu razem z odpadami gospodarstwa domowego. Produkt należy przekazać do wyznaczonego punktu gromadzenia odpadów, np. firmie, od której kupowany jest nowy, podobny produkt lub do autoryzowanego punktu gromadzenia zużytego sprzętu elektrycznego i elektronicznego w celu poddania go recyklingowi. Usuwanie tego typu odpadów w nieodpowiedni sposób może mieć negatywny wpływ na otoczenie i zdrowie innych osób ze względu na niebezpieczne substancje stosowane w takim sprzęcie. Jednocześnie pozbycie się zużytego sprzętu w zalecany sposób przyczynia się do właściwego wykorzystania zasobów naturalnych. Aby uzyskać więcej informacji na temat punktów, do których można dostarczyć sprzęt do recyklingu, prosimy skontaktować się z lokalnym urzędem miasta, zakładem utylizacji odpadów, skorzystać z instrukcji zatwierdzonej dyrektywą WEEE lub skontaktować się z przedsiębiorstwem zajmującym się wywozem odpadów domowych. Więcej informacji o zwracaniu i recyklingu zużytego sprzętu elektrycznego i elektronicznego znajduje się w witrynie www.canon-europe.com/weee.

Platí len pre štáty Európskej únie a EHP (Nórsko, Island a Lichtenštajnsko)

Tento symbol znamená, že podľa Smernice 2012/19/EÚ o odpade z elektrických a elektronických zariadení (OEEZ) a podľa platnej legislatívy Slovenskej republiky sa tento produkt nesmie likvidovať spolu s komunálnym odpadom. Produkt je potrebné odovzdať do určenej zberne, napr. prostredníctvom výmeny za kúpu nového podobného produktu, alebo na autorizované zberné miesto, ktoré spracúva odpad z elektrických a elektronických zariadení (EEZ). Nesprávna manipulácia s takýmto typom odpadu môže mať negatívny vplyv na životné prostredie a ľudské zdravie, pretože elektrické a elektronické zariadenia obsahujú potenciálne nebezpečné látky. Spoluprácou na správnej likvidácii produktu prispejete k účinnému využívaniu prírodných zdrojov. Ďalšie informácie o mieste recyklácie opotrebovaných zariadení získate od miestneho úradu, úradu životného prostredia, zo schváleného plánu OEEZ alebo od spoločnosti, ktorá zaisťuje likvidáciu komunálneho odpadu. Viac informácií nájdete aj na webovej stránke: www.canon-europe.com/weee.

Üksnes Euroopa Liit ja EMP (Norra, Island ja Liechtenstein)

See sümbol näitab, et antud toodet ei tohi vastavalt elektri- ja elektroonikaseadmete jäätmeid käsitlevale direktiivile (2012/19/EL) ning teie riigis kehtivatele õigusaktidele utiliseerida koos olmejäätmetega. Antud toode tuleb anda selleks määratud kogumispunkti, nt müügipunkt, mis on volitatud üks ühe vastu vahetama, kui ostate uue sarnase toote, või elektri- ja elektroonikaseadmete jäätmete ümbertöötlemiseks

mõeldud kogumispunkti. Täiendava teabe saamiseks elektri- ja elektroonikaseadmetest tekkinud jäätmete tagastamise ja ümbertöötlemise kohta võtke ühendust kohaliku omavalitsusega, asjakohase valitsusasutusega, asjakohase tootjavastutusorganisatsiooniga või olmejäätmete käitlejaga. Lisateavet leitate ka Interneti-leheküljelt www.canon-europe.com/weee.

Tikai Eiropas Savienībai un EEZ (Norvēģijai, Islandei un Lihtenšteinai)

Šis simbols norāda, ka atbilstoši ES Direktīvai (2012/19/ES) par elektrisko un elektronisko iekārtu atkritumiem (EEIA) un vietējiem tiesību aktiem no šī izstrādājuma nedrīkst atbrīvoties, izmetot to kopā ar sadzīves atkritumiem. Šis izstrādājums ir jānodod piemērotā savākšanas vietā, piemēram, apstiprinātā veikalā, kur iegādājaties līdzīgu jaunu produktu un atstājat veco, vai apstiprinātā vietā izlietotu elektrisko un elektronisko iekārtu pārstrādei. Nepareiza šāda veida atkritumu apsaimniekošana var apdraudēt vidi un cilvēka veselību tādu iespējami bīstamu vielu dēļ, kas parasti ir elektriskajās un elektroniskajās iekārtās. Turklāt jūsu atbalsts pareizā šāda veida atkritumu apsaimniekošanā sekmēs efektīvu dabas resursu izmantošanu. Lai saņemtu pilnīgāku informāciju par vietām, kur izlietoto iekārtu var nodot pārstrādei, sazinieties ar vietējo pašvaldību, atkritumu savākšanas atbildīgo dienestu, pilnvarotu EEIA struktūru vai sadzīves atkritumu apsaimniekošanas iestādi. Lai saņemtu plašāku informāciju par elektrisko un elektronisko iekārtu nodošanu pārstrādei, apmeklējiet tīmekļa vietni www.canon-europe.com/weee.

Tik Europos Sąjungai ir EEE (Norvegijai, Islandijai ir Lichtenšteinui)

Šis ženklas reiškia, kad gaminio negalima išmesti su buitinėmis atliekomis, kaip yra nustatyta Direktyvoje (2012/19/ES) ir nacionaliniuose teisė aktuose dėl EĮ atliekų tvarkymo. Šį gaminį reikia atiduoti į tam skirtą surinkimo punktą, pvz., pagal patvirtintą keitimo sistemą, kai perkamas panašus gaminys, arba į elektros ir elektroninės įrangos (EĮ) atliekų perdirbimo punktą. Netinkamas tokios rūšies atliekų tvarkymas dėl elektros ir elektroninėje įrangoje esančių pavojingų medžiagų gali pakenkti aplinkai ir žmonių sveikatai. Padėdami užtikrinti tinkamą šio gaminio šalinimo tvarką, kartu prisidėsite prie veiksmingo gamtos išteklių naudojimo. Jei reikia daugiau informacijos, kaip šalinti tokias atliekas, kad jos būtų toliau perdirbamos, kreipkitės į savo miesto valdžios institucijas, atliekų tvarkymo organizacijas, patvirtintų EĮ atliekų sistemų arba jūsų buitinių atliekų tvarkymo įstaigų atstovus. Išsamesnės informacijos apie EĮ atliekų grąžinimo ir perdirbimo tvarką galite rasti apsilankę tinklalapyje www.canon-europe.com/weee.

Samo za Evropsko unijo in EGP (Norveška, Islandija in Lihtenštajn)

Ta simbol pomeni, da tega izdelka v skladu z direktivo OEEO (2012/19/EU) in državno zakonodajo ne smete odvreči v gospodinjske odpadke. Ta izdelek morate odložiti na ustrezno zbiralno mesto, na primer pri pooblaščenem prodajalcu, ko kupite podoben nov izdelek ali na zbiralno mesto za recikliranje električne in elektronske opreme. Neprimerno ravnanje s takšnimi odpadki lahko negativno vpliva na okolje in človekovo zdravje zaradi nevarnih snovi, ki so povezane z električno in elektronsko opremo. S pravilno odstranitvijo izdelka hkrati prispevate tudi k učinkoviti porabi naravnih virov. Če želite več informacij o tem, kje lahko odložite odpadno opremo za recikliranje, pokličite občinski urad, komunalno podjetje ali službo, ki skrbi za odstranjevanje odpadkov, ali si oglejte načrt OEEO. Če želite več informacij o vračanju in recikliranju izdelkov v skladu z direktivo OEEO, obiščite www.canon-europe.com/weee.

Само за Европейския съюз и ЕИП (Норвегия, Исландия и Лихтенщайн)

Този символ показва, че този продукт не трябва да се изхвърля заедно с битовите отпадъци, съгласно Директивата за ИУЕЕО (2012/19/ЕС) и Вашето национално законодателство. Този продукт трябва да бъде предаден в предназначен за целта пункт за събиране, например на база размяна, когато купувате нов подобен продукт, или в одобрен събирателен пункт за рециклиране на излязло от употреба електрическо и електронно оборудване (ИУЕЕО). Неправилното третиране на този тип отпадъци може да доведе до евентуални отрицателни последствия за околната среда и човешкото здраве поради потенциално опасните вещества, които обикновено са свързани с ЕЕО. В същото време Вашето съдействие за правилното изхвърляне на този продукт ще допринесе за ефективното използване на природните ресурси. Повече информация относно местата, където може да предавате излязло от употреба оборудване за рециклиране, може да получите от местните власти, от органа, отговорен за отпадъците и от одобрена система за излязло от употреба ЕЕО или от Вашата местна служба за битови отпадъци. За повече информация относно връщането и рециклирането на продукти от излязло от употреба ЕЕО посетете www.canon-europe.com/weee.

Doar pentru Uniunea Europeană şi EEA (Norvegia, Islanda şi Liechtenstein)

Acest simbol indică faptul că acest produs nu trebuie aruncat o dată cu reziduurile menajere, în conformitate cu Directiva DEEE (Directiva privind deşeurile de echipamente electrice şi electronice) (2012/19/UE) şi legile naţionale. Acest produs trebuie transportat la un punct de colectare special, de exemplu un centru care preia produsele vechi atunci când achiziţionaţi un produs nou similar, sau la un punct de colectare autorizat pentru reciclarea deşeurilor provenite de la echipamentele electrice şi electronice (EEE). Mânuirea necorespunzătoare a acestor tipuri de deşeuri poate avea un impact negativ asupra mediului înconjurător şi sănătăţii indivizilor, din cauza substanţelor potenţial nocive care sunt în general asociate cu EEE. În acelaşi timp, cooperarea dvs. la reciclarea corectă a acestui produs va contribui la utilizarea efectivă a resurselor naturale. Pentru mai multe informaţii privind locurile de reciclare a deşeurilor provenite de la echipamente, contactaţi biroul primăriei locale, autoritatea responsabilă cu colectarea deşeurilor, schema DEEE aprobată sau serviciul de colectare a deşeurilor menajere. Pentru

mai multe informaţii privind returnarea şi reciclarea produselor DEEE, vizitaţi www.canon-europe.com/weee.

Samo za Europsku uniju i EEZ (Norveška, Island i Lihtenštajn)

Ovaj simbol pokazuje da se ovaj proizvod ne smije odlagati s kućnim otpadom sukladno WEEE Direktivi (2012/19/EC) i vašem nacionalnom zakonu. Ovaj proizvod je potrebno predati na posebno mjesto za sakupljanje otpada, npr. na ovlašteno mjesto gdje možete zamijeniti staro za novo ukoliko kupujete novi sličan proizvod ili na ovlašteno mjesto za sakupljanje rabljene električne i elektroničke opreme (EEE) za recikliranje. Nepropisno rukovanje ovom vrstom otpada može imati negativan učinak na okolinu i zdravlje ljudi zbog supstanci koje su potencijalno opasne za zdravlje, a općenito se povezuju s EEE. Istovremeno, vaša će suradnja kroz propisno odlaganje ovog proizvoda doprinijeti efektivnoj uporabi prirodnih resursa. Za više informacija o tome gdje možete odložiti svoj otpad za recikliranje obratite se vašem lokalnom gradskom uredu, komunalnoj službi, odobrenom WEEE programu ili službi za odlaganje kućnog otpada. Ostale informacije o vraćanju i recikliranju WEEE proizvoda potražite na www.canon-europe.com/weee.

Korisnici u Srbiji

Ovaj simbol označava da ovaj proizvod ne sme da se odlaže sa ostalim kućnim otpadom, u skladu sa WEEE Direktivom (2012/19/EU) i nacionalnim zakonima. Ovaj proizvod treba predati određenom centru za prikupljanje, npr. na osnovi "jedan-za-jedan" kada kupujete sličan novi proizvod, ili ovlašćenom centru za prikupljanje za reciklažu istrošene električne i elektronske opreme (EEE). Nepravilno rukovanje ovom vrstom otpada može da ima moguće negativne posledice po životnu sredinu i ljudsko zdravlje usled potencijalno opasnih materijala koji se uglavnom vezuju za EEE. U isto vreme, vaša saradnja na ispravnom odlaganju ovog proizvoda će doprineti efikasnom korišćenju prirodnih resursa. Za više informacija o tome gde možete da predate vašu staru opremu radi recikliranje, vas molimo, da kontaktirate lokalne gradske vlasti, komunalne službe, odobreni plan reciklaže ili Gradsku čistoću. Za više informacija o vraćanju i recikliranju WEEE proizvoda, posetite stranicu www.canon-europe.com/weee.

Handling Precautions

- Canceling Print Jobs
- Legal Restrictions on Scanning/Copying
- Printer Handling Precautions
- Transporting Your Printer
- When repairing, lending, or disposing of the printer
- Keeping Print Quality High

Legal Restrictions on Scanning/Copying

Scanning, printing, copying, or modifying copies of the following may be punishable under law.

This list is non-exhaustive. When in doubt, check with a local legal representative.

- Paper money
- Money orders
- Certificates of deposit
- Postage stamps (canceled or uncanceled)
- Identification badges or insignia
- Selective service or draft papers
- Checks or drafts issued by governmental agencies
- Motor vehicle licenses and certificates of title
- Traveler's checks
- Food stamps
- Passports
- Immigration papers
- Internal revenue stamps (canceled or uncanceled)
- Bonds or other certificates of indebtedness
- Stock certificates
- Copyrighted works or works of art, without the owner's consent

Printer Handling Precautions

Do not place any object on the document cover!

Do not place any object on the document cover. It will fall into the rear tray when the document cover is opened and cause the printer to malfunction. Also, place the printer where objects will not fall on it.

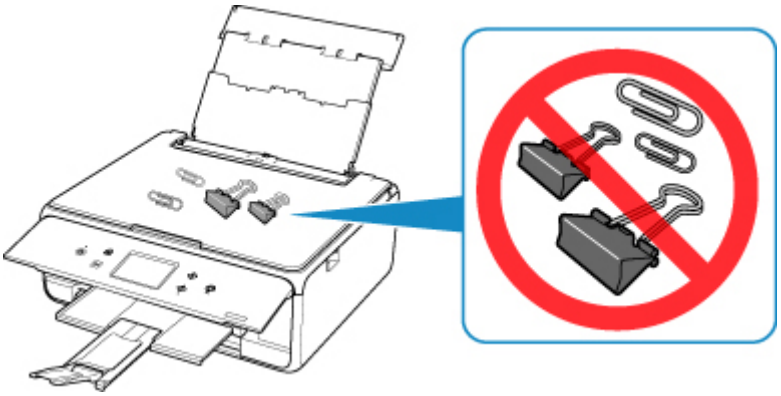

Transporting Your Printer

When relocating the printer, make sure of the following.

Important

- Pack the printer in a sturdy box so that it is placed with its bottom facing down, using sufficient protective material to ensure safe transport.
- With the print head and ink tank left installed in the printer, press the **ON** button to turn off the power. This allows the printer to automatically cap the print head, thus preventing it from drying.
- After packing, do not tilt the box containing the printer or turn it on its side or upside down. Doing so may cause the ink to leak during transport and cause damage to the printer.
- When a shipping agent is handling transport of the printer, have its box marked "THIS SIDE UP" to keep the printer with its bottom facing down. Mark also with "FRAGILE" or "HANDLE WITH CARE".

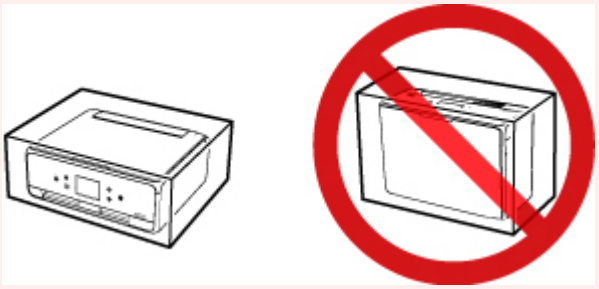

1. Turn the printer off.

2. Confirm that the **ON** lamp is off and unplugging the power cord.

   Important

   - Do not unplug the printer while the **ON** lamp is lit or flashing, as it may cause malfunction or damage to the printer, making the printer unable to print.

3. Retract the paper output tray and the output tray extension.

4. Close the operation panel, paper support, and the rear tray cover.

5. If the cassette is extended, contract it.

6. Unplug the printer cable from the computer and from the printer, then unplug the power cord from the printer.

7. Use adhesive tape to secure all the covers on the printer to keep them from opening during transportation. Then pack the printer in the plastic bag.

8. Attach the protective material to the printer when packing the printer in the box.

When repairing, lending, or disposing of the printer

If you have entered personal data, passwords and/or other security settings on the printer, such information may be stored in the printer.

When sending the printer for repair, lending or transferring the printer to another person, or disposing of the printer, please be sure to follow the steps below in order to delete such information and prevent third parties from accessing it.

- Select **Setup** on the HOME screen and select **Settings** > **Device settings** > **Reset settings** > **Reset all** > **Yes**.

Keeping Print Quality High

The key to printing with the optimal printing quality is to prevent the print head from drying or clogging. Always observe the following rules for optimal printing quality.

Note

- Depending on the type of paper, ink may blur if you trace the printed area with a highlight pen or paint-stick, or bleed if water or sweat comes in contact with the printed area.

Never unplug the power cord until the power is turned off!

If you press the **ON** button to turn off the power, the printer caps the print head (nozzles) automatically to prevent from drying. If you unplug the power cord from the wall outlet before the **ON** lamp is turned off, the print head will not be capped properly and this will cause drying or clogging.

When Unplugging the Printer, make sure that the **ON** lamp is not lit.

Print periodically!

Just as the tip of a felt pen becomes dry and unusable if it has not been used for a long time, even if it is capped, the print head too, may become dried or clogged if the printer has not been used for a long time. We recommend you to use the printer at least once a month.

Main Components and Their Use

- Main Components
- Power Supply
- Using the Operation Panel

Main Components

- Front View
- Rear View
- Inside View
- Operation Panel

Front View

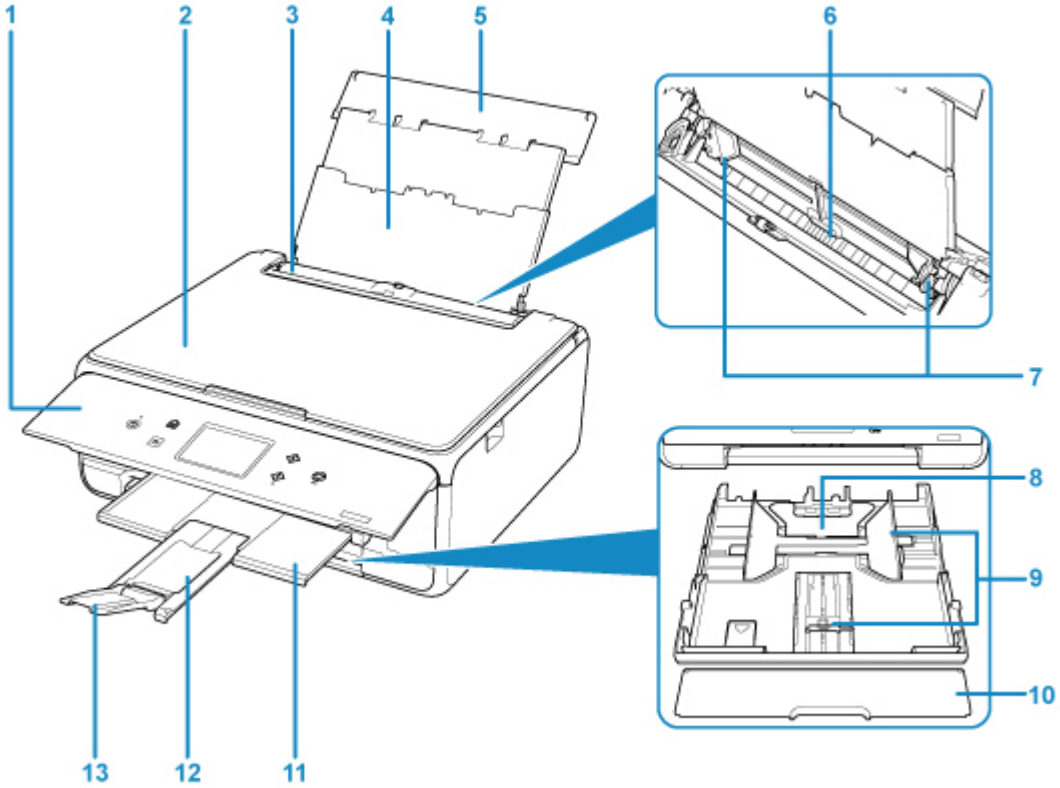

(1) operation panel

Use to change the settings of the printer or to operate it.

- Operation Panel

(2) document cover

Open to load an original on the platen glass.

(3) feed slot cover

Prevents anything from falling into the feed slot.

Open it to slide the paper guides, and close it before printing.

(4) paper support

Extend to load paper in the rear tray.

(5) rear tray cover

Open to load paper in the rear tray.

(6) rear tray

Load paper here. Two or more sheets of the same size and type of paper can be loaded at the same time, and fed automatically one sheet at a time.

- Loading Paper in the Rear Tray
- Loading Envelopes

(7) paper guides

Align with both sides of the paper stack.

(8) cassette

Load A4, B5, A5, or Letter-sized plain paper into the cassette, and insert it into the printer.

Loading Paper in the Cassette

(9) paper guides

Align with right/left/front sides of the paper stack.

(10) cassette cover

Detach to load paper in the cassette.

(11) paper output tray

Printed paper is ejected. Pull out it before printing.

(12) paper output support

Extend to support ejected paper.

(13) output tray extension

Open to support ejected paper.

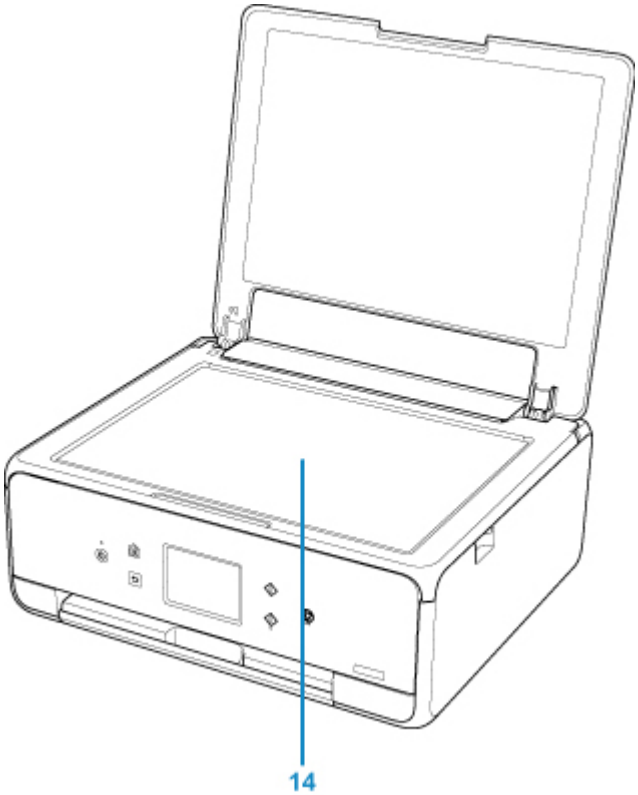

(14) platen glass

Load an original here.

Rear View

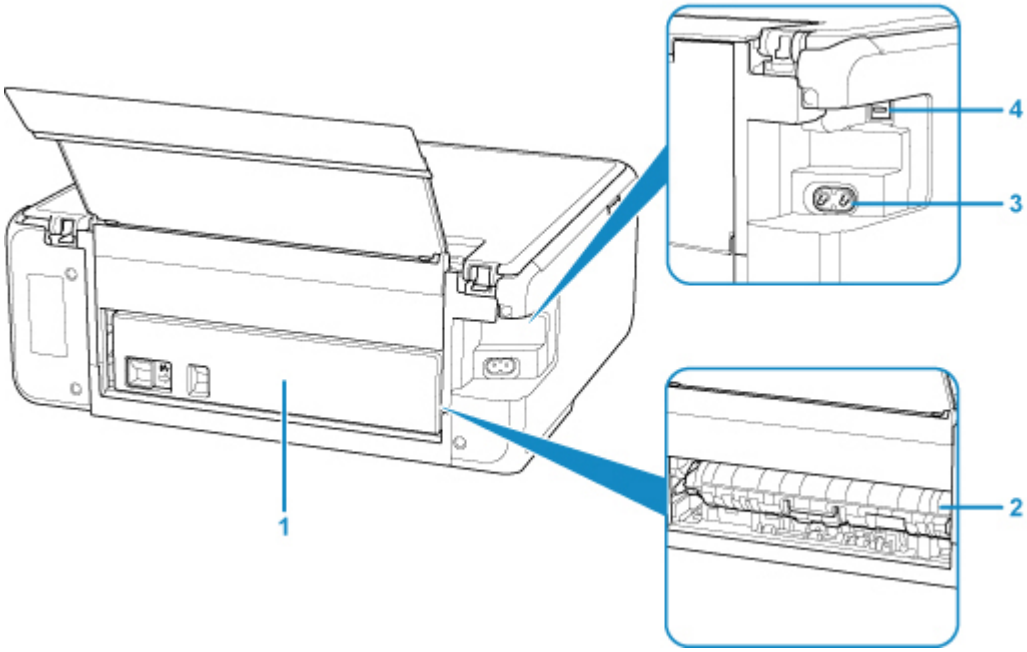

(1) rear cover

Detach when removing jammed paper.

(2) transport unit cover

Open when removing jammed paper.

(3) power cord connector

Plug in the supplied power cord.

(4) USB port

Plug in the USB cable to connect the printer with a computer.

Important

- Do not touch the metal casing.
- Do not plug in or unplug the USB cable while the printer is printing or scanning originals with the computer.

Inside View

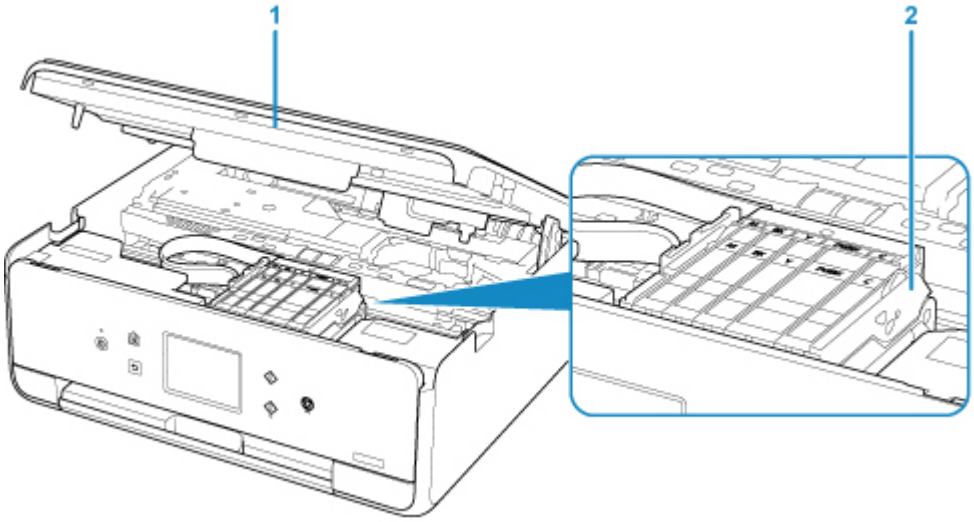

(1) scanning unit / cover

Scans originals. Also, lift and open it to replace an ink tank or to remove jammed paper inside the printer.

(2) print head holder

The print head is pre-installed.

Note

- For details on replacing an ink tank, see Replacing Ink Tanks.

Operation Panel

* All lamps on the operation panel are shown lit in the figure below for explanatory purposes.

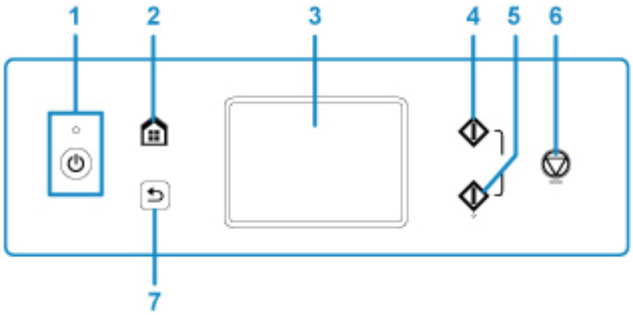

(1) ON button/ON lamp

Turns the power on or off. Lights after flashing when the power is turned on. Before turning on the power, make sure that the document cover is closed.

(2) HOME button

Used to display the HOME screen.

Using the Operation Panel

(3) touch screen

Displays messages, menu items, and the operational status. Directly touch the screen lightly with your finger tip to select a menu item or displayed button.

Basic Operation of the touch screen

(4) Black button

Starts black & white copying, scanning, etc.

(5) Color button

Starts color copying, scanning, etc.

(6) Stop button

Cancels operation when print, copy, or scan job is in progress.

(7) Back button

Returns the touch screen to the previous screen.

Power Supply

- Confirming that the Power Is On
- Turning the Printer On and Off
- Checking the Power Plug/Power Cord
- Unplugging the Printer

Confirming that the Power Is On

The **ON** lamp is lit when the printer is turned on.

Even if the touch screen is off, if the **ON** lamp is lit, the printer is on.

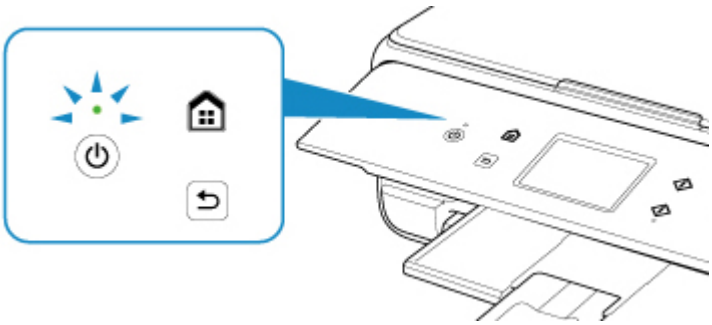

Note

- It may take a while for the printer to start printing immediately after you turn on the printer.
- The touch screen display will turn off if the printer is not operated for about 10 minutes. To restore the display, press any button except the **ON** button or touch the touch screen. The print operation from a computer can also restore the display.

Turning the Printer On and Off

Turning on the printer

1. Press the **ON** button to turn on the printer.

   The **ON** lamp flashes and then remains lit.

   Confirming that the Power Is On

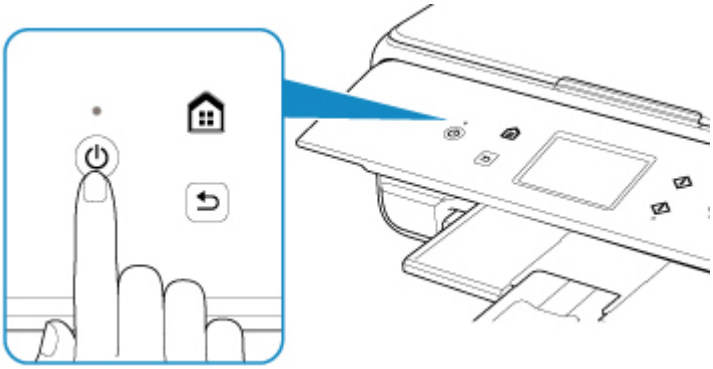

Note

- It may take a while for the printer to start printing immediately after you turn on the printer.
- If an error message is displayed on the touch screen, see An Error Occurs.
- You can set the printer to automatically turn on when a print or scan operation is performed from a computer connected by USB cable or wireless network. This feature is set to off by default.

  From the printer

  ECO settings

  From the computer

  - For Windows:

    Managing the Printer Power

  - For Mac OS:

    Managing the Printer Power

Turning off the printer

1. Press the **ON** button to turn off the printer.

   When the **ON** lamp stops flashing, the printer is turned off.

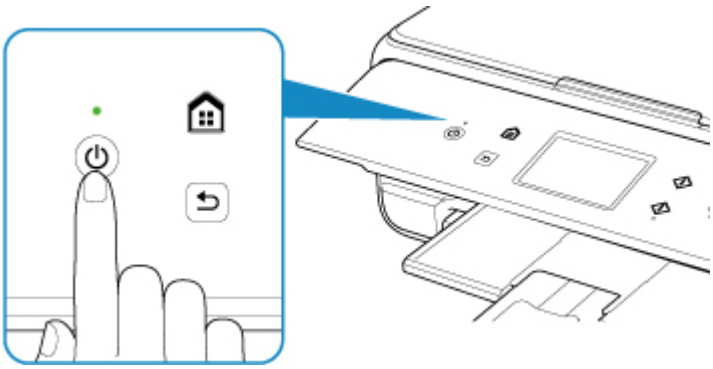

Important

- When you unplug the power cord after turning off the printer, be sure to confirm that the **ON** lamp is off.

Note

- You can set the printer to automatically turn off when no operations are performed or no print jobs are sent to the printer for a certain interval. This feature is set to on by default.

  From the printer

  ■ ECO settings

  From the computer

  - For Windows:

    ■ Managing the Printer Power

  - For Mac OS:

    ■ Managing the Printer Power

Checking the Power Plug/Power Cord

Unplug the power cord once a month to confirm that the power plug/power cord does not have anything unusual described below.

- The power plug/power cord is hot.
- The power plug/power cord is rusty.
- The power plug/power cord is bent.
- The power plug/power cord is worn.
- The power plug/power cord is split.

⚠ Caution

- If you find anything unusual with the power plug/power cord described above, Unplugging the Printer and call for service. Using the printer with one of the unusual conditions above may cause a fire or an electric shock.

Unplugging the Printer

To unplug the power cord, follow the procedure below.

Important

- When you unplug the power cord, press the **ON** button, then confirm that the **ON** lamp is off. Unplugging the power cord while the **ON** lamp is lit or flashing may cause drying or clogging of the print head and print quality may be reduced.

1. Press the **ON** button to turn the printer off.

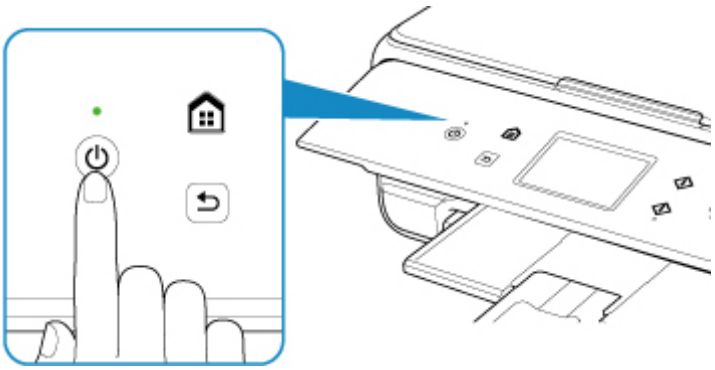

2. Confirm that the **ON** lamp is off.

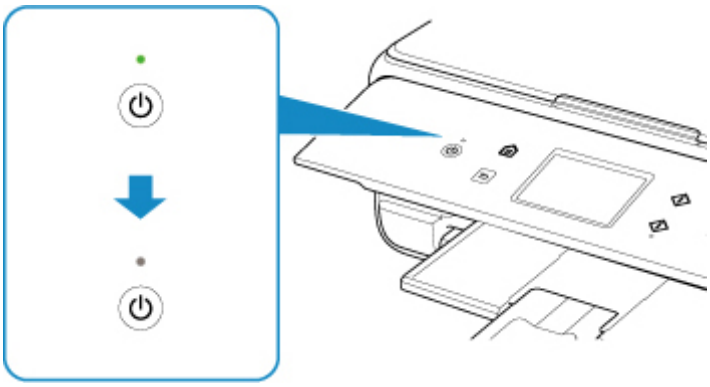

3. Unplug the power cord.

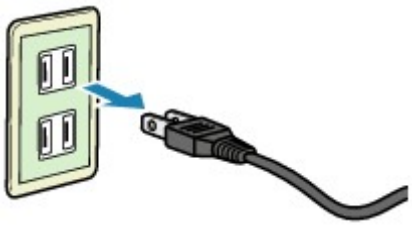

The specification of the power cord differs depending on the country or region of use.

Using the Operation Panel

The operation panel consists of the touch screen (A) and buttons (B).

Touch the HOME screen on the touch screen with your finger tip to select menus for copying, scanning, and other functions.

Operations on the Home Screen

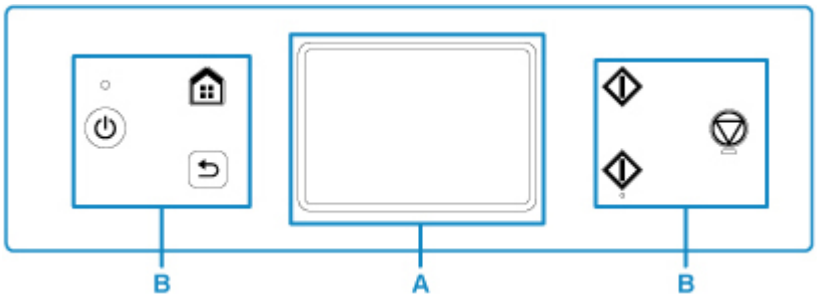

A: touch screen

Basic Operation of the touch screen

B: Buttons on the operation panel

Basic Operation of the touch screen

Touch the touch screen lightly with your finger tip or move your finger to access various functions or settings.

Important

- When operating the touch screen, make sure to avoid the followings, which may cause the printer to malfunction or damage the printer.
  - Strongly pressing the touch screen.
  - Pressing the touch screen with other than your finger (especially with sharpened tips, such as on ballpoint pens, pencils, or nails).
  - Touching the touch screen with wet or dirty hands.
  - Placing any objects on the touch screen.
- Do not attach a protective sheet on the touch screen. Removing it may damage the touch screen.

Tap

Touch lightly with your finger tip and immediately release.

Use to select an item or photo on the screen.

Touch

Touch lightly with your finger tip.

To move forward (or go back) menus or photos continuously, keep touching the forward (or back) mark.

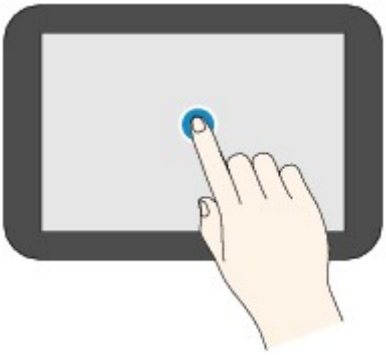

Flick

Flick your finger on the screen up, down, left, or right.

Use to switch menus or move forward or backward through photos.

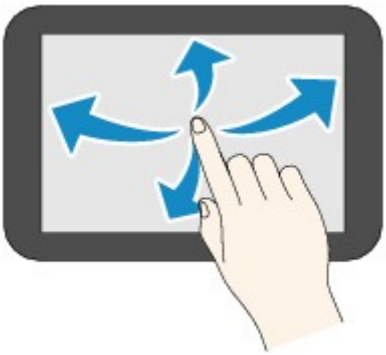

Drag

While lightly touching the screen, move your finger up, down, left, or right.

Use to view lists of items or move sliders.

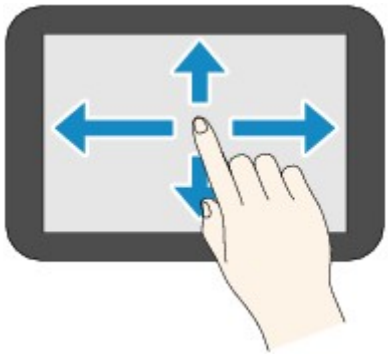

Operations on the Home Screen

Display the menu screen or the settings screen from the Home screen.

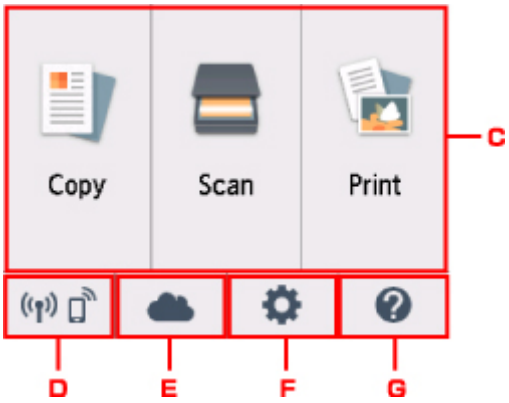

C. Basic menu

Select to copy or scan using the operation panel. After selecting a basic menu, the particular menus are displayed.

D. **Network status**

Displays the current network status. Select to display the basic network information or to change the network settings.

The icon differs depending on the network of use or the network status.

Wireless LAN is enabled and the printer is connected to the wireless router.

Note

- Depending on the signal state, the icon will change.

  (Signal strength: 81 % or more): You can use the printer over a wireless LAN without any problems.

  (Signal strength: 51 % or more): The problem such as the printer cannot print may occur according to the network status. We recommends placing the printer near the wireless router.

(Signal strength: 50 % or less): The problem such as the printer cannot print may occur. Place the printer near the wireless router.

Wireless LAN is enabled but the printer is not connected to the wireless router.

Wireless Direct is enabled.

Wireless LAN is disabled.

E. **Cloud**

Displays the cloud's Main screen. You can use the services of PIXMA/MAXIFY Cloud Link.

F. **Setup**

Displays the printer's setting menus or the maintenance menus.

G. **Quick guide**

Displays the guides how to loading paper or how to replace the ink tank, or the troubleshooting.

Changing Settings

- Changing Printer Settings from Your Computer (Windows)
- Changing Printer Settings from Your Computer (Mac OS)
- Changing Settings from Operation Panel

Changing Printer Settings from Your Computer (Mac OS)

- Managing the Printer Power
- Changing the Printer Operation Mode

Managing the Printer Power

Printer power supply is operated from Remote UI.

Energy saving settings

Energy saving settings allows you to set **Auto power off** and **Auto power on**.

Auto power off is the function wherein the printer automatically turns itself off, when data is not sent or the printer remains inactive for a certain period.
The **Auto power on** function automatically turns on the printer when data is received.

1. Selecting **Device settings** from Remote UI

2. Click **Energy saving settings**

3. Complete the following settings:

   Auto power off
   Specify the time from the list. Printer automatically turns itself off, when data is not sent within the specified time or the printer has remained inactive.

   Auto power on
   When you check this check box, the printer automatically turns itself on when data is sent.

4. Apply the settings

   Click **OK**.
   The printer will operate with the changed settings hereafter.

Changing the Printer Operation Mode

If necessary, switch between various modes of printer operation.

1. Check whether the printer is on and select **Device settings** from Remote UI

2. If necessary, complete the following settings:

   Print settings - Prevent paper abrasion

   The printer can increase the gap between the print head and the paper during high-density printing to prevent paper abrasion.
   Check this check box to prevent paper abrasion.

   Custom settings - Detect paper setting mismatch

   If the check box is deselected, at the time of printing from PC, you can continue to print without the message display even if the paper settings set in the Print dialog differs from the paper information registered to the printer.

   Ink drying wait time

   You can set the length of the printer rest time until printing of the next page begins. The wait time becomes longer as the value set in the list increases, and shorter as the value decreases.
   If the paper gets stained because the next page is ejected before the ink on the printed page dries, increase the ink drying wait time.
   Reducing the ink drying wait time speeds up printing.

3. Apply the settings

   Click **OK**.

   The printer operates with the modified settings hereafter.

Changing Settings from Operation Panel

- Changing Settings from Operation Panel
- Setting Items on Operation Panel
- Print settings
- LAN settings
- Device user settings
- PictBridge print settings
- Language selection
- Firmware update
- Feed settings
- Reset setting
- Web service setup
- System information
- ECO settings
- Quiet setting

Changing Settings from Operation Panel

This section describes the procedure to change the settings in the **Device settings** screen, taking the steps to specify **Extended copy amount** as an example.

1. Make sure printer is turned on.

2. Select **Setup** on the HOME screen.

   Using the Operation Panel

3. Select **Settings**.

4. Select **Device settings**.

   The **Device settings** screen is displayed.

5. Select a setting item to adjust.

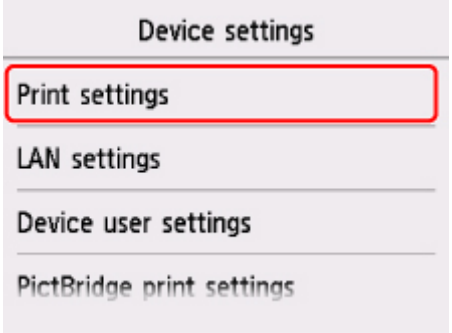

   The setting screen for the selected item is displayed.

6. Select a setting item.

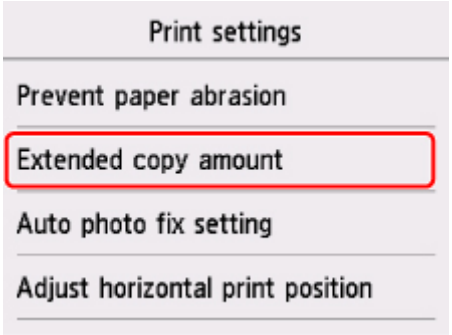

7. Select a setting to specify.

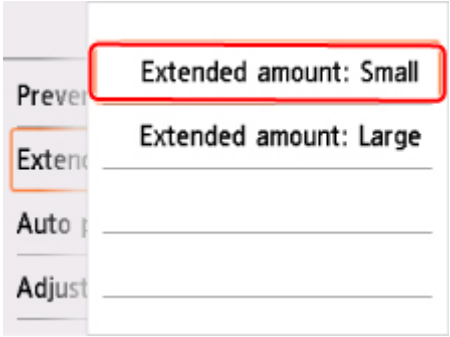

For more on setting items on the operation panel:

- Setting Items on Operation Panel

Setting Items on Operation Panel

Items for Printer

- Device user settings
- Web service setup
- Language selection
- ECO settings
- Quiet setting

Items for Paper/Printing

- Print settings
- Feed settings
- PictBridge print settings

Items for Maintenance/Management

- System information
- Firmware update
- LAN settings
- Reset setting

Print settings

- **Prevent paper abrasion**

  Use this setting only if the print surface becomes smudged.

  Important

  - Be sure to set this back to **OFF** after printing since it may result in lower printing speed or lower print quality.

- **Extended copy amount**

  Selects the amount of image that extends off the paper when printing in borderless (full).

  Slight cropping may occur at the edges since the copied image is enlarged to fill the whole page. You can change the width to be cropped from the borders of the original image as needed.

  Important

  - This setting can be applied under the following conditions:

    - Performing borderless copying

    - Borderless is selected for Border when copying printed photos

  Note

  - If printouts contain margins even though you are printing in Borderless, specifying **Extended amount: Large** for this setting may help solve the problem.

- **Auto photo fix setting**

  When **ON** is selected, you can select whether to print photos using the Exif information recorded in the image files when **Default*** or **On** is selected in printing with a PictBridge (Wireless LAN) compliant device.

  * When **Default** is selected for the print setting on the PictBridge (Wireless LAN) compliant device, select **Auto photo fix** for **Photo fix** in **PictBridge print settings**.

- **Adjust horizontal print position**

  Adjusts the print position when the left/right margins are not aligned.

  You can adjust the left/right margins in increments of 0.01 inch/0.1 mm between -0.12 inch/-3 mm and +0.12 inch/+3 mm centered on the horizontal center of the paper.

  Important

  - For Letter-sized or Legal-sized paper, you can adjust the left/right margins between -0.06 inch/-1.5 mm and +0.06 inch/+1.5 mm even if you specify the value over 0.06 inch/1.5 mm.

LAN settings

- Wireless LAN
- Wireless Direct
- Common settings

Wireless LAN

- **WLAN active/inactive**

  Enables/disables wireless LAN.

- **Wireless LAN setup**

  Selects the setup method for wireless LAN connection.

  - **Easy wireless connect**

    Select if you specify the settings of the access point information to the printer directly from a device (e.g. smartphone, or tablet) without operating the wireless router. Follow the on-screen instructions of the connecting device for the setup procedure.

  - **Manual connect**

    Select when you perform settings for wireless LAN manually using the operation panel of the printer.

  - **WPS (Push button method)**

    Select when you perform settings for wireless LAN using a wireless router supporting a Wi-Fi Protected Setup (WPS) push button method. Follow the on-screen instructions during setup.

  - **Other setup**

    - **Advanced setup**

      Select when you perform settings for wireless LAN manually. You can specify multiple WEP keys.

    - **WPS (PIN code method)**

      Select when you perform settings for wireless LAN using a wireless router supporting a Wi-Fi Protected Setup (WPS) PIN code method. Follow the on-screen instructions during setup.

- **WLAN setting list**

  The list of wireless LAN settings of this printer is displayed on the touch screen.

  Select **Print details** and then **Yes** to print the list.

  Printing Network Settings

  Important

  - The network settings printout contains important information about your network. Handle it with care.

  The following setting items are displayed. (Some setting items are not displayed depending on the printer settings.)

Items	Setting
SSID	XXXXXXXXXXXXXXXX XXXXXXXXXXXXXXXX (up to 32 characters)
Wireless LAN security	Inactive/WEP(64bit)/WEP(128bit)/WPA-PSK(TKIP)/WPA-PSK(AES)/ WPA2-PSK(TKIP)/WPA2-PSK(AES)
Signal strength (%)	XXX
IPv4 address	XXX. XXX. XXX. XXX (12 characters)
IPv4 subnet mask	XXX. XXX. XXX. XXX (12 characters)
IPv4 default gateway	XXX. XXX. XXX. XXX (12 characters)
IPv6 address	XXXX: XXXX: XXXX: XXXX: XXXX: XXXX: XXXX: XXXX (32 characters)
MAC address of wireless LAN	XX:XX:XX:XX:XX:XX (12 characters)
Printer name	XXXXXXXXXXXXXXX (up to 15 characters)
Bonjour service name	XXXXXXXXXXXXX XXXXXXXXXXXXX XXXXXXXXXXXXX XXXXXXXXXXXXX (up to 52 characters)
Root cert. thumbprint (SHA-1)	XXXXXXXX XXXXXXXX XXXXXXXX XXXXXXXX XXXXXXXX
Root cert. thumbprint (SHA-256)	XXXXXXXX XXXXXXXX XXXXXXXX XXXXXXXX XXXXXXXX XXXXXXXX XXXXXXXX XXXXXXXX

("XX" represents alphanumeric characters.)

Wireless Direct

- **Wireless Direct active/inactive**

  Enables/disables Wireless Direct.

- **Change SSID/device name**

  Changes the identifier (SSID/the printer's name displayed on a Wi-Fi Direct compatible device) for Wireless Direct.

- **Change password**

  Changes the password for Wireless Direct.

- **Connection request confirmation**

  Selecting **Yes** displays the confirmation screen when a Wi-Fi Direct compatible device is connecting the printer.

- **Wireless Direct setting list**

  The list of Wireless Direct settings of this printer is displayed on the touch screen.

  Select **Print details** and then **Yes** to print the list.

  Printing Network Settings

Important

- The network settings printout contains important information about your network. Handle it with care.

The following setting items are displayed. (Some setting items are not displayed depending on the printer settings.)

Items	Setting
SSID	DIRECT-XXXX-TS6100series
Password	XXXXXXXXXX (10 characters)
Wireless LAN security	WPA2-PSK(AES)
IPv4 address	XXX. XXX. XXX. XXX (12 characters)
IPv4 subnet mask	XXX. XXX. XXX. XXX (12 characters)
IPv4 default gateway	XXX. XXX. XXX. XXX (12 characters)
IPv6 address	XXXX: XXXX: XXXX: XXXX: XXXX: XXXX: XXXX: XXXX (32 characters)
MAC address of wireless LAN	XX:XX:XX:XX:XX:XX (12 characters)
Printer name	XXXXXXXXXXXXXXX (up to 15 characters)
Bonjour service name	XXXXXXXXXXXXX XXXXXXXXXXXXX XXXXXXXXXXXXX XXXXXXXXXXXXX (up to 52 characters)
Wireless Direct device name	DIRECT-XXXX-TS6100series
No. of devices connected now	XX/XX
Root cert. thumbprint (SHA-1)	XXXXXXXX XXXXXXXX XXXXXXXX XXXXXXXX XXXXXXXX
Root cert. thumbprint (SHA-256)	XXXXXXXX XXXXXXXX XXXXXXXX XXXXXXXX XXXXXXXX XXXXXXXX XXXXXXXX XXXXXXXX

("XX" represents alphanumeric characters.)

Common settings

- **Set printer name**

Specifies the printer name. You can use up to 15 characters for the name.

Note

- You cannot use the same printer name as that already used for other LAN connected devices.
- You cannot use a hyphen for the initial or last character of the printer name.

- **TCP/IP settings**

  Performs IPv4 or IPv6 setting.

- **WSD setting**

  Setting items when you use WSD (one of the network protocols supported in Windows 8.1, Windows 8, Windows 7, and Windows Vista).

  - **Enable/disable WSD**

    Selects whether WSD is enabled or disabled.

    Note

    - When this setting is enabled, the printer icon is displayed on the Network Explorer in Windows 8.1, Windows 8, Windows 7, and Windows Vista.

  - **Optimize inbound WSD**

    Selecting **Enable** allows you to receive the WSD printing data faster.

  - **WSD scan from this device**

    Selecting **Enable** allows you to transfer the scanned data to the computer using WSD. To transfer the scanned data, press the **Color** button.

    Note

    - When you forward the scanned data to the computer searched using WSD, you cannot select the document type.

  - **Timeout setting**

    Specifies the timeout length.

- **Bonjour settings**

  Setting items for LAN using Bonjour for Mac OS.

  - **Enable/disable Bonjour**

    Selecting **Enable** allows you to use Bonjour to perform the network settings.

  - **Service name**

    Specifies the Bonjour service name. You can use up to 48 characters for the name.

    Note

    - You cannot use the same service name as that already used for other LAN connected devices.

- **LPR protocol setting**

  Enables/disables the LPR setting.

- **RAW protocol**

  Enables/disables RAW printing.

- **LLMNR**

  Enables/disables LLMNR (Link-Local Multicast Name Resolution). Selecting **Active** allows the printer to detect printer's IP address from the printer name without a DNS server.

- **PictBridge communication**

  Setting items for printing from a PictBridge (Wireless LAN) compliant device.

  - **Enable/disable communication**

    Selecting **Enable** allows you to print from a PictBridge (Wireless LAN) compliant device.

  - **Timeout setting**

    Specifies the timeout length.

- **IPsec settings**

  Selecting **Active** allows you to specify the IPsec security.

Device user settings

- **Sound control**

  Selects the volume.

  - **Keypad volume**

    Selects the beep volume when tapping the touch screen or the buttons on the operation panel.

  - **Alarm volume**

    Selects the alarm volume.

- **Device info sending settings**

  Selects whether you will send the printer usage information to Canon server. The information sent to Canon will be utilized to develop better products. Select **Agree** to send the printer usage information to Canon server.

- **Energy saving settings**

  Allows you to turn on/off the printer automatically to save electricity.

  - **Auto power off**

    Specifies the length of time to turn off the printer automatically when no operation is made or no printing data is sent to the printer.

  - **Auto power on**

    Selecting **ON** enables the printer to turn on automatically when a scanning command from a computer or printing data is sent to the printer.

Note

- You can also enter this setting menu by selecting **ECO settings** and **Energy saving settings** on the HOME screen.

  ECO settings

- **Document removal reminder**

  Selects whether the printer will display the reminder screen in case you forget to remove the original from the platen glass after scanning.

Important

- Depending on the type of original or the state of the document cover, forgetting to remove the original may not be detected.

- **Bluetooth settings**

  Setting items for connecting with Bluetooth compatible device.

  - **Enable/disable Bluetooth**

    Enables/disables the Bluetooth function of the printer.

  - **List/delete paired devices**

Displays the list of paired Bluetooth compatible devices. To delete the paired Bluetooth compatible device, select a Bluetooth compatible device from the list.

- **Check/change PIN code**

  Allows you to check the PIN code and change it.

  Important

  - When you change the PIN code, pairing with all Bluetooth compatible devices is canceled.

- **Set Bluetooth device name**

  Specifies the printer name for Bluetooth connection.

Note

- If the printer cannot be paired to the Bluetooth compatible device after you changed some settings in **Bluetooth settings** see below.

  Cannot Find Printer from Smartphone/Tablet while Using Bluetooth

Language selection

Changes the language for the messages and menus on the touch screen.

Firmware update

You can update the firmware of the printer, check the firmware version, or perform settings of a notification screen, a DNS server and a proxy server.

Note

- Only **Check current version** is available when **Inactive** is selected for **WLAN active/inactive** of **Wireless LAN** in **LAN settings**.

- **Install update**

  Performs the firmware update of the printer. If you select **Yes**, the firmware update starts. Follow the on-screen instructions to perform update.

  ### Important

  - When you use this function, make sure the printer is connected to the Internet.

  ### Note

  - If the firmware update is not complete, check the following and take an appropriate action.
    - Check the network settings such as a wireless router.
    - If **Cannot connect to the server.** is displayed on the touch screen, select **OK** and try again after a while.

- **Check current version**

  You can check the current firmware version.

- **Update notification setting**

  When **Yes** is selected and the firmware update is available, the screen to inform you of the firmware update is displayed on the touch screen.

- **DNS server setup**

  Performs settings for a DNS server. Select **Auto setup** or **Manual setup**. If you select **Manual setup**, follow the display on the touch screen to perform settings.

- **Proxy server setup**

  Performs settings for a proxy server. Follow the display on the touch screen to perform settings.

Feed settings

By registering the paper size and the media type loaded on the rear tray or in the cassette, you can prevent the printer from misprinting by displaying the message before printing starts when the paper size or the media type of the loaded paper differs from the print settings.

For details:

Paper Settings

- **Register paper information**

  Registers the paper size and the media type you load on the rear tray and in the cassette.

  Note

  - Plain paper can only be loaded in the cassette.
  - For more on the proper combination of paper settings you can specify by the printer driver (Windows) or on the touch screen:

    Paper Settings on the Printer Driver and the Printer (Media Type)
    Paper Settings on the Printer Driver and the Printer (Paper Size)

- **Detect paper setting mismatch**

  If you select **Yes**, the printer detects whether the paper size and the media type are identical with those registered in **Register paper information**. If printing starts with the settings that do not match, an error message is displayed on the touch screen.

  Note

  - When **No** is selected, **Register paper information** is disabled.

Reset setting

You can set the settings back to the default.

- **Web service setup only**

  Sets the Web service settings back to the default.

- **LAN settings only**

  Sets the LAN settings back to the default.

- **Settings only**

  Sets the settings such as the paper size or media type back to the default.

- **Device info sending settings only**

  Sets only the device information sending settings back to the default.

- **Reset all**

  Sets all settings you made to the printer back to the default. The administrator password specified by Remote UI or IJ Network Device Setup Utility reverts to the default setting.

  Note

  - You cannot set the following setting items back to the default:
    - The language displayed on the touch screen
    - The current position of the print head
    - CSR (Certificate Signing Request) for encryption method (SSL/TLS) setting

Web service setup

Select this setting item from **Web service setup** on **Settings**.

- **Web service connection setup**

  The following setting items are available.

  - **Google Cloud Print setup**

    Registers/Deletes the printer to/from Google Cloud Print.

  - **IJ Cloud Printing Center setup**

    Registers/Deletes the printer to/from Canon Inkjet Cloud Printing Center.

  - **Check Web service setup**

    Make sure whether the printer is registered to Google Cloud Print or Canon Inkjet Cloud Printing Center.

- **DNS server setup**

  Performs settings for a DNS server. Select **Auto setup** or **Manual setup**. If you select **Manual setup**, follow the display on the touch screen to perform settings.

- **Proxy server setup**

  Performs settings for a proxy server. Follow the display on the touch screen to perform settings.

System information

To display this menu, select **System information** on **Setup**.

- **Current version**

  Displays the current firmware version.

- **Printer name**

  Displays the printer name currently specified.

- **Serial number**

  Displays the printer serial number.

- **MAC address of wireless LAN**

  Displays the MAC address for wireless LAN.

ECO settings

This setting allows you to use automatic duplex printing as a default to save paper and to turn on/off the printer automatically to save electricity.

- Using Duplex Printing
- Using Power Saving Function

Using Duplex Printing

Follow the procedure below to use duplex printing.

1. Make sure printer is turned on.

2. Select **Setup** on the HOME screen.

   - Using the Operation Panel

3. Select **Settings**.

4. Select **ECO**.

5. Select **Two-sided printing setting**.

6. Specify settings as necessary.

   A. Select two-sided copying as a default.

   B. Select two-sided printing of template forms on the printer as a default.

Note

- When duplex printing is selected, the icon is displayed on the setting items for duplex printing on each print setting screen.

Using Power Saving Function

Follow the procedure below to use power saving function.

1. Make sure printer is turned on.

2. Select **Setup** on the HOME screen.

   Using the Operation Panel

3. Select **Settings**.

4. Select **ECO**.

5. Select **Energy saving settings**.

6. Check on-screen instructions and select **Next**.

7. Specify settings as necessary.

   A. Specify the length of time to turn the printer off automatically when no operation is made or no printing data is sent to the printer.

   B. Selecting **ON** enables the printer to turn on automatically when a scanning command from a computer or printing data is sent to the printer.

Quiet setting

Enables this function on the printer if you want to reduce the operating noise, such as when printing at night.

Follow the procedure below to perform setting.

1. Make sure printer is turned on.

2. Select **Setup** on the HOME screen.

   Using the Operation Panel

3. Select **Settings**.

4. Select **Quiet setting**.

5. Select **Use quiet mode**.

   The confirmation screen is displayed and the icon appears as the **Quiet setting** menu icon.

   Activate this setting to reduce the operating noise while printing is in progress.

Important

- Operating speed is reduced compared to when **Do not use quiet mode** is selected.
- This function may not be so effective depending on the printer's setting. Furthermore, certain noise, such as when the printer is preparing for printing, is not reduced.

Note

- You can set the quiet mode from the operation panel of the printer or the printer driver. No matter how you set the quiet mode, the mode is applied when you perform operations from the operation panel of the printer or printing and scanning from the computer.
- For Windows, you can set the quiet mode from ScanGear (scanner driver).

Specifications

General Specifications

Printing resolution (dpi)	4800* (horizontal) x 1200 (vertical) * Ink droplets can be placed with a pitch of 1/4800 inch at minimum.
Interface	**USB Port:** Hi-Speed USB *1 **LAN Port:** Wireless LAN: IEEE802.11n / IEEE802.11g / IEEE802.11b *2 *1 A computer that complies with Hi-Speed USB standard is required. Since the Hi-Speed USB interface is fully upwardly compatible with USB 1.1, it can be used at USB 1.1. *2 Setup possible through Standard setup, WPS (Wi-Fi Protected Setup), WCN (Windows Connect Now) or Easy wireless connect. USB and LAN can be used at the same time.
Print width	8 inches/203.2 mm (for Borderless Printing: 8.5 inches/216 mm)
Printable area	**Borderless printing:** Top/Bottom/Left/Right margin: 0.0 inch (0.0 mm) **Standard printing:** -Top margin: • Square size: 0.24 inches (6.0 mm) • Other sizes: 0.12 inches (3.0 mm) -Bottom margin: • Square size: 0.24 inches (6.0 mm) • Other sizes: 0.20 inches (5.0 mm) -Left margin: • Letter/Legal: 0.26 inches (6.4 mm) • Square size: 0.24 inches (6.0 mm) • Other sizes: 0.14 inches (3.4 mm) -Right margin: • Letter/Legal: 0.25 inches (6.3 mm) • Square size: 0.24 inches (6.0 mm) • Other sizes: 0.14 inches (3.4 mm) * For printable area of envelope, see below. ■ Envelopes **Auto duplex printing:** -Top margin: 0.20 inches (5.0 mm) -Bottom margin: 0.20 inches (5.0 mm) -Left margin:

	• Letter: 0.26 inches (6.4 mm) • Other sizes: 0.14 inches (3.4 mm) -Right margin: • Letter: 0.25 inches (6.3 mm) • Other sizes: 0.14 inches (3.4 mm)
Operating environment	**Temperature:** 41 to 95 °F (5 to 35 °C) **Humidity:** 10 to 90 % RH (no condensation) * The performance of the printer may be reduced under certain temperature and humidity conditions. Recommended conditions: **Temperature:** 59 to 86 °F (15 to 30 °C) **Humidity:** 10 to 80 % RH (no condensation) * For the temperature and humidity conditions of papers such as photo paper, refer to the paper's packaging or the supplied instructions.
Storage environment	**Temperature:** 32 to 104 °F (0 to 40 °C) **Humidity:** 5 to 95 % RH (no condensation)
Power supply	AC 100-240 V, 50/60 Hz (The supplied power cord is only for the country or region you purchased.)
Power consumption	**Printing (Copy):** Approx. 14 W **Standby (minimum):** Approx. 0.8 W *1*2 **OFF:** Approx. 0.2 W *1 *1 USB connection to PC *2 The wait time for standby cannot be changed.
External dimensions	Approx. 14.7 (W) x 12.5 (D) x 5.5 (H) inches Approx. 372 (W) x 315 (D) x 139 (H) mm * With the Paper Support and Paper Output Tray retracted.
Weight	Approx. 13.6 lb (Approx. 6.2 kg) * With the Print Head and ink tanks installed.
Print Head/Ink	Total 4096 nozzles (PgBK 1024 nozzles, Y/DyeBK each 512 nozzles, C/M each 1024 nozzles)

Copy Specifications

Multiple copy	max. 99 pages
Intensity adjustment	9 positions, Auto intensity (AE copy)
Reduction / Enlargement	25 % - 400 % (1 % unit)

Scan Specifications

Scanner driver	**Windows:** TWAIN 1.9 Specification, WIA
Maximum scanning size	A4/Letter, 8.5" x 11.7"/216 x 297 mm
Scanning resolution	**Optical resolution (horizontal x vertical) max:** 1200 x 2400 dpi *1 **Interpolated resolution max:** 19200 x 19200 dpi *2 *1 Optical Resolution represents the maximum sampling rate based on ISO 14473. *2 Increasing the scanning resolution will limit the maximum possible scanning area.
Gradation (Input / Output)	**Gray:** 16 bit/8 bit **Color:** 48 bit/24 bit (RGB each 16 bit/8 bit)

Network Specifications

Communication protocol	TCP/IP
Wireless LAN	**Supported Standards:** IEEE802.11n / IEEE802.11g / IEEE802.11b **Frequency bandwidth:** 2.4 GHz **Channel:** 1-11 or 1-13 * Frequency bandwidth and available channels differ depending on country or region. **Communication distance:** Indoors 164 feet/50 m * Effective range varies depending on the installation environment and location. **Security:** WEP (64/128 bits) WPA-PSK (TKIP/AES) WPA2-PSK (TKIP/AES) **Setup:** WPS (Push button configuration/PIN code method) WCN (WCN-NET) Easy wireless connect **Other Features:** Administration password

Minimum System Requirements

Conform to the operating system's requirements when higher than those given here.

Windows

Operating System	Windows 10, Windows 8.1 Windows 7 SP1

	Note: Operation can only be guaranteed on a PC with pre-installed Windows 7 or later. .NET Framework 4.5.2 or 4.6 is required.
Hard Disk Space	3 GB Note: For bundled software installation. The necessary amount of hard disk space may be changed without notice.
Display	XGA 1024 x 768

Mac OS

Operating System	OS X v10.10.5 - OS X v10.11, macOS Sierra v10.12
Hard Disk Space	1.5 GB Note: For bundled software installation. The necessary amount of hard disk space may be changed without notice.
Display	XGA 1024 x 768

Other Supported OS

iOS, Android, Windows 10 Mobile Some functions may not be available with the supported OS. Refer to the Canon web site for details.

Mobile Printing Capability

Apple AirPrint
Google Cloud Print
PIXMA Cloud Link

- Internet connection or CD-ROM drive is required to install the software for Windows.
- Internet connection is required to use Easy-WebPrint EX and all the user's guide.
- Easy-WebPrint EX: Internet Explorer 8, 9, 10 and 11* (for Windows) is required.
- Windows: Some functions may not be available with Windows Media Center.
- Windows: The TWAIN driver (ScanGear) is based on the TWAIN 1.9 Specification and requires the Data Source Manager bundled with the operating system.
- In an in-house network environment, the 5222 port must be open. Contact the network administrator for details.

Information in this guide is subject to change without notice.

Information about Paper

- **Supported Media Types**
  - Paper Load Limit
- **Unsupported Media Types**
- **Handling Paper**
- **Print Area**

Supported Media Types

For best results, choose paper designed for how you are printing. A variety of paper for documents as well as photos or illustrations is available from Canon. Use genuine Canon paper to print important photos, when possible.

Media Types

Genuine Canon paper

Note

- For warnings on use of the non-printable side, see each product's usage information.
- For details on page sizes and media types, access the Canon website.
- Genuine Canon paper is not available in some countries or regions. Note that in the United States, Canon paper is not sold by model number. Instead, purchase paper by name.

Paper for printing documents:

- Canon Red Label Superior <WOP111>
- Canon Océ Office Colour Paper <SAT213>
- High Resolution Paper <HR-101N>*1

Paper for printing photos:

- Photo Paper Pro Platinum <PT-101>
- Glossy Photo Paper "Everyday Use" <GP-501>
- Photo Paper Glossy <GP-701>
- Photo Paper Plus Glossy II <PP-201>
- Photo Paper Plus Glossy II <PP-301>
- Photo Paper Pro Luster <LU-101>
- Photo Paper Plus Semi-gloss <SG-201>
- Matte Photo Paper <MP-101>

Paper other than genuine Canon paper

- Plain Paper (including recycled paper)
- Envelopes*1
- T-Shirt Transfers*1
- Greeting Card*1

*1 Printing to this paper from the operation panel or from a PictBridge (Wireless LAN) compliant device is not supported.

- Paper Load Limit
- Paper Settings on the Printer Driver and the Printer (Media Type) (Windows)

Note

- When printing photos saved on a PictBridge (Wireless LAN) compliant device, you must specify the page size and media type.

  - Printing from Digital Camera

Page Sizes

You can use the following page sizes.

Note

- Page sizes and media types the printer supports differ depending on the OS you are using.

Standard sizes:

- Letter
- Legal
- A4
- B5
- A5
- L(89x127mm)
- KG/4"x6"(10x15)
- 2L/5"x7"(13x18)
- Square 5"x5" 127x127mm
- Hagaki
- Hagaki 2
- Card 2.17"x3.58" 55x91mm
- 8"x10"(20x25cm)
- Envelope Com 10
- Envelope DL
- Nagagata 3
- Nagagata 4
- Yougata 4
- Yougata 6

Special sizes

Special page sizes must be within the following limits:

- rear tray

  - Minimum size: 2.17 x 3.51 inches (55.0 x 89.0 mm)

  - Maximum size: 8.50 x 26.61 inches (215.9 x 676.0 mm)

- cassette

  - Minimum size: 5.83 x 8.27 inches (148.0 x 210.0 mm)

  - Maximum size: 8.50 x 11.69 inches (215.9 x 297.0 mm)

Paper Weight

You can use paper in the following weight range.

- 17 to 28 lb (64 to 105 g /m^2) (plain paper other than genuine Canon paper)

Paper Load Limit

Genuine Canon Paper

Paper for printing documents:

Media Name <Model No.>	Rear Tray	Cassette	Paper Output Tray
Canon Red Label Superior <WOP111>	Approx. 100 sheets	Approx. 100 sheets	Approx. 50 sheets
Canon Océ Office Colour Paper <SAT213>	Approx. 80 sheets	Approx. 80 sheets	Approx. 50 sheets
High Resolution Paper <HR-101N>*1	Approx. 80 sheets	N/A	Approx. 50 sheets

Paper for printing photos:

Media Name <Model No.>	Rear Tray	Paper Output Tray
Photo Paper Pro Platinum <PT-101>*2	A4, Letter, and 8" x 10" (20 x 25 cm): 10 sheets 4" x 6" (10 x 15 cm): 20 sheets	*3
Glossy Photo Paper "Everyday Use" <GP-501>*2	A4, Letter: 10 sheets 4" x 6" (10 x 15 cm): 20 sheets	*3
Photo Paper Glossy <GP-701>*2	A4, Letter: 10 sheets 4" x 6" (10 x 15 cm): 20 sheets	*3
Photo Paper Plus Glossy II <PP-201>*2	A4, Letter, 5" x 7" (13 x 18 cm), 8" x 10" (20 x 25 cm): 10 sheets 4" x 6" (10 x 15 cm), Square 5" x 5" (127 x 127 mm): 20 sheets	*3
Photo Paper Plus Glossy II <PP-301>*2	A4, Letter, 5" x 7" (13 x 18 cm), 8" x 10" (20 x 25 cm): 10 sheets 4" x 6" (10 x 15 cm), Square 5" x 5" (127 x 127 mm): 20 sheets	*3
Photo Paper Pro Luster <LU-101>*2	A4, Letter: 10 sheets	*3
Photo Paper Plus Semi-gloss <SG-201>*2	A4, Letter, 5" x 7" (13 x 18 cm), 8" x 10" (20 x 25 cm): 10 sheets 4" x 6" (10 x 15 cm): 20 sheets	*3
Matte Photo Paper <MP-101>	A4, Letter: 10 sheets 4" x 6" (10 x 15 cm): 20 sheets	*3

Paper other than Genuine Canon Paper

Common Name	Rear Tray	Cassette	Paper Output Tray
Plain Paper (including recycled paper)*1	Approx. 100 sheets (10 sheets: Legal)	Approx. 100 sheets	Approx. 50 sheets (10 sheets: Legal)
Envelopes	10 envelopes	N/A	*3
T-Shirt Transfers	1 sheet : A4	N/A	*3
Greeting Card	1 sheet : Letter	N/A	*3

*1 Normal feeding at maximum capacity may not be possible with some types of paper, or under very high or low temperature or humidity. In this case, load half the amount of paper or less.
*2 Feeding from a loaded stack of paper may leave marks on the printed side or prevent efficient feeding. In this case, load one sheet at a time.
*3 For best results in continuous printing, remove printed paper or envelopes from the paper output tray to avoid smearing or discoloration.

Unsupported Media Types

Do not use the following types of paper. Using such paper will cause not only unsatisfactory results, but also the printer to jam or malfunction.

- Folded, curled, or wrinkled paper
- Damp paper
- Paper that is too thin (weighing less than 17 lb (64 g /m^2))
- Paper that is too thick (plain paper weighing more than 28 lb (105 g /m^2), except for Canon genuine paper)
- Paper thinner than a postcard, including plain paper or notepad paper cut to a small size (when printing on paper smaller than A5)
- Picture postcards
- Postcards
- Envelopes with a double flap
- Envelopes with an embossed or treated surface
- Envelopes whose gummed flaps are already moistened and adhesive
- Any type of paper with holes
- Paper that is not rectangular
- Paper bound with staples or glue
- Paper with an adhesive surface on the back such as label seal
- Paper decorated with glitter, etc.

Handling Paper

- Be careful not to rub or scratch the surfaces of any types of paper when handling.
- Hold the paper as closely as possible to its edges and try not to touch the printing surface. The print quality may be degraded if the printing surface is smudged with sweat or oil that comes from your hands.
- Do not touch the printed surface until the ink is dried. Even when the ink is dried, be careful not to touch the printed surface as much as possible when handling. Due to the nature of the pigment ink, the ink on the printed surface may be removed when being rubbed or scratched.
- Take out only the necessary number of paper from the package, just before printing.
- To avoid curling, when you do not print, put unused paper back into the package and keep it on a level surface. And also, store it avoiding heat, humidity, and direct sunlight.

Printing

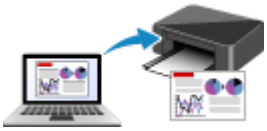

Printing from Computer

Printing from Smartphone/Tablet

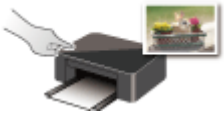

Printing Using Operation Panel

Printing from Digital Camera

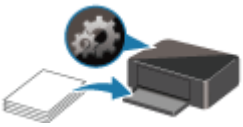

Paper Settings

Printing from Computer

- Printing from Application Software (Windows Printer Driver)
- Printing from Application Software (AirPrint)
- Printing Using Canon Application Software
- Printing Using a Web Service

Printing from Application Software (AirPrint)

- Printing Using AirPrint Basic
- Adding AirPrint Printer
- How to Open AirPrint Printer Settings Screen
- Display the Printing Status Screen
- Deleting the Undesired Print Job
- Removing AirPrint Printer That Is No Longer Required from List of Printers

Printing Using AirPrint

You can print photographs, E-mails, web pages, and other documents using AirPrint, even if the printer driver is not installed or the application is not downloaded.

Print with AirPrint from a Mac

1. Check that printer power is on

   Note

   - If **Auto power on** is enabled, printer automatically turns itself on when receiving a print job.

2. Load paper in printer

3. Start printing from your application software

   The Print dialog opens.

4. Select printer

   Select your model from the **Printer** list in the Print dialog.

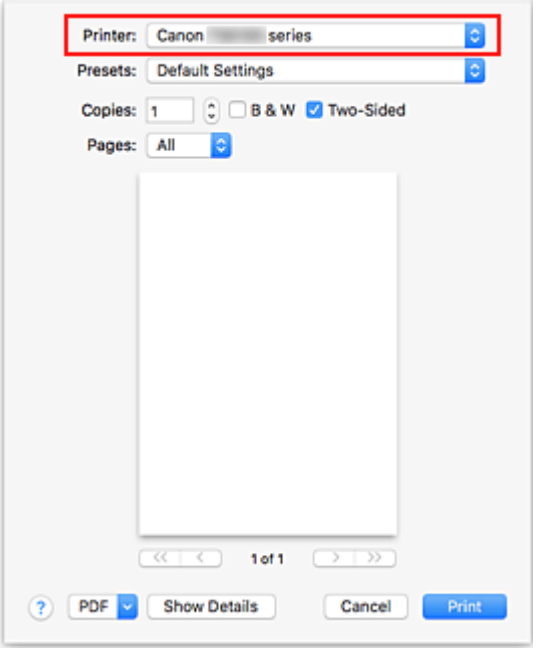

   Note

   - Click **Show Details** to switch the setup window to the detailed display.

5. Check print settings

Set items such as **Paper Size** to the appropriate size, as well as **Feed from** and **Media Type** from **Media & Quality** of the pop-up menu.

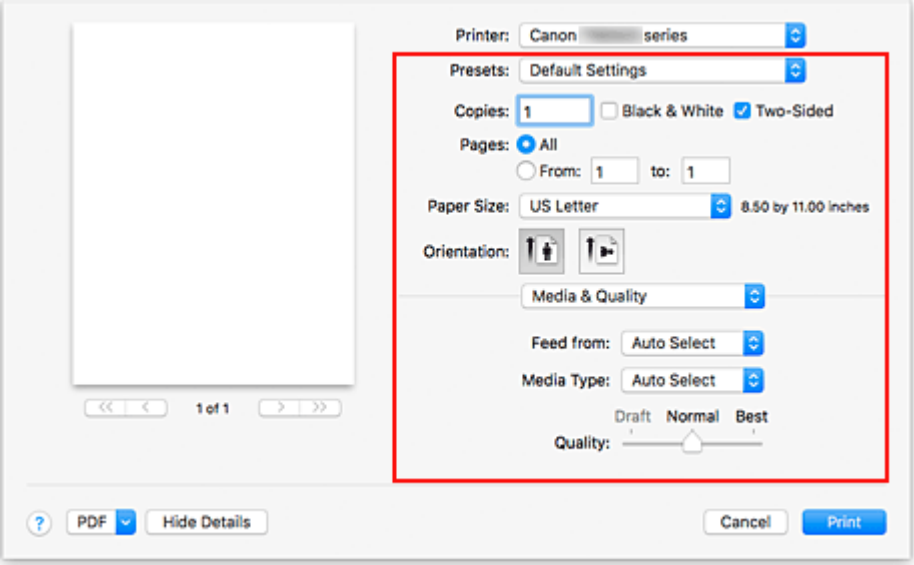

Important

- An error may occur if the paper size/type set in the print dialog is different from the paper size/type set on the printer. Select the correct items on the print dialog and the printer that correspond to the paper being printed.
- If printing in **A4**, **A5**, **JIS B5**, or **US Letter**, set the desired feed position (**Main Tray** or **Rear Tray**) from **Feed from** of the print dialog. If **Auto Select** is selected in **Feed from**, the feed position differs depending on **Media Type**. If **Media Type** is set to plain paper, it is fed from the cassette (main tray). If set to other types of paper, it is fed from the rear tray.
- If printing paper such as photo paper that cannot be printed on both sides, uncheck the **Two-Sided** checkbox.

Note

- Use the Print dialog to set general print settings such as the layout and the print sequence. For information about print settings, refer to Mac OS help.

6. Click **Print**

When you execute printing, the printer prints according to the specified settings.

Note

- It can take the wireless LAN a few minutes to get connected after the printer turns on. Print after checking that the printer is connected to the network.
- You cannot use AirPrint if Bonjour settings of printer are disabled. Check LAN settings of printer and enable Bonjour settings.
- Refer to "Cannot Print Using AirPrint" for printing problems when using AirPrint.
- The display of the settings screen may differ depending on the application software you are using.

Printing of Envelopes

For printing on the envelope from Mac with AirPrint, refer to the following.

Print result image	Orientation of print data	Orientation of loading envelope
	 The print data is rotated by 180 degrees against the print result image.	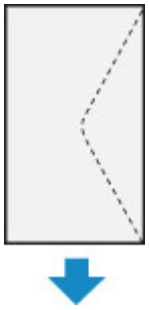 Load the envelope in vertically with the address side facing up so that the folded flap of the envelope will be faced down on the right side.

Adding AirPrint Printer

Procedure for adding AirPrint printer to your Mac is explained.

To re-add a printer that was deleted, open **System Preferences** -> **Printers & Scanners**, click **+** next to the printer list, and then perform the procedure described below.

1. Check whether **Default** is selected in the displayed dialog

   Note

   - It may take a little time for the name of your printer to appear.

2. Select the printer

   Select the printer listed as **Bonjour Multifunction**.

   Note

   - Check the following if printer does not appear.
     - Printer is on
     - Firewall function of the security software is off
     - Printer is either connected to the wireless router or directly connected to the PC
   - To use the printer with a USB connection, select **USB Multifunction**.

3. Select **Secure AirPrint** or **AirPrint** from **Use**

4. Click **Add**

   AirPrint printer is added to your Mac.

How to Open AirPrint Printer Settings Screen

The settings screen of the AirPrint printer can be displayed from your application software.

Opening the Page Setup Dialog

Use this procedure to set the page (paper) settings before printing.

1. Select **Page Setup...** from the **File** menu of the application software

   The Page Setup dialog opens.

Opening the Print Dialog

Use this procedure to set the print settings before printing.

1. Select **Print...** from the **File** menu of the application software

   The Print dialog opens.

Display the Printing Status Screen

Check the print progress according to the following procedure:

1. Launch the printing status screen

   - If the print data has been sent to the printer

     The printing status screen opens automatically. To display the printing status screen, click the (the printer icon) displayed on the Dock.
   - If the print data has not been sent to the printer

     Open **System Preferences**, and select **Printers & Scanners**.
     To display the printing status screen, select the name of your printer model from the printer list, and then click **Open Print Queue...**.

2. Check the printing status

   You can check the name of the file being printed or ready for being printed.

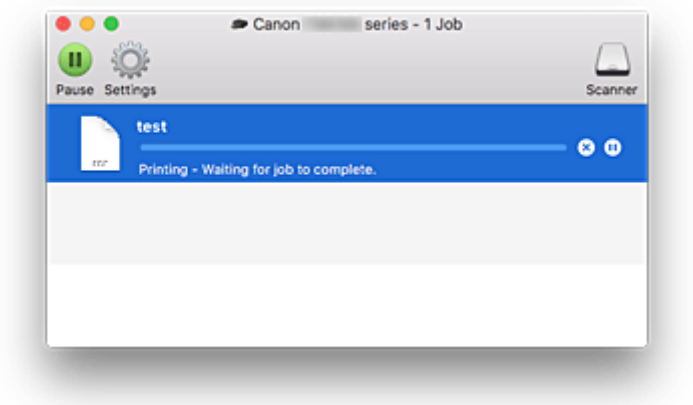

Deletes the specified print job.

Stops printing the specified document.

Resumes printing the specified document.

Stops printing all documents.

Displayed only when printing of all documents is being stopped, and resumes printing all documents.

Deleting the Undesired Print Job

If the printer does not start printing, canceled or failed print job data may be remaining.
Delete unnecessary print jobs from the print status check screen.

1. Open **System Preferences**, and select **Printers & Scanners**

2. Select your model, and then click **Open Print Queue...**

   The print status check screen appears.

3. Select the unnecessary print job and click (Delete)

   The selected print jobs will be deleted.

Removing AirPrint Printer That Is No Longer Required from List of Printers

AirPrint printer that is no longer in use can be removed from the list of printers.
Before removing AirPrint printer, remove the cable connecting the printer and PC.

You cannot remove the AirPrint printer if not logged in as the administrator. For information about an administrative user, refer to the user's manual for the Mac OS.

1. Open **System Preferences**, and select **Printers & Scanners**

2. Delete AirPrint printer from list of printers

   Select the AirPrint printer you wish to remove from the list of printers and click **-**.

   Click **Delete Printer** when the confirmation message appears.

Printing from Smartphone/Tablet

- Printing from iPhone/iPad/iPod touch (iOS)
- Printing from Smartphone/Tablet (Android)
- Printing from Windows 10 Mobile Device
- Printing/Scanning with Wireless Direct

Printing from iOS Device (AirPrint)

Use AirPrint to print photographs, E-mails, web pages, and other documents without having to download special applications.

Checking Your Environment

First, check your environment.

- AirPrint Operation Environment
  iPhone, iPad, and iPod touch running the latest version of iOS
- Requirement
  The iOS device and the printer must be connected to the same network over a LAN or connected directly without wireless router.

Printing with AirPrint from iOS Device

1. Check that printer power is on

   Note

   - If **Auto power on** is enabled, printer automatically turns itself on when receiving a print job.

2. Load paper in printer

3. Tap operation icon using your iOS device's application

   The following screen appears when printing from iOS 10's Safari. The screen differs depending on the devices or applications.

Menu options appear.

4. Tap **Print**

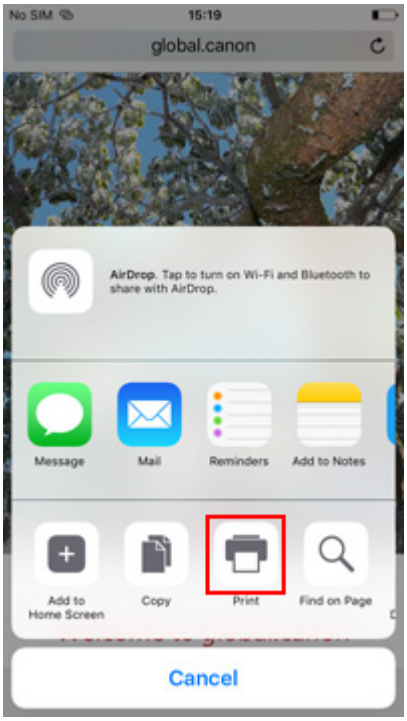

5. Select your model name from **Printer** on **Printer Options**.

Important

- Because some applications do not support AirPrint, **Printer Options** may not be displayed. If an application does not let you use printer options, you cannot print from that application.

6. Check Print Settings

   Set the number of copies to be printed and print options, as needed.

7. Tap **Print**

   When you execute printing, the printer prints according to the specified settings.

Note

- It can take the wireless LAN a few minutes to get connected after the printer turns on. Print after checking that the printer is connected to the network.
- You cannot use AirPrint if Bonjour settings of printer are disabled. Check LAN settings of printer and enable Bonjour settings.
- Refer to "Cannot Print Using AirPrint" for printing problems when using AirPrint.

Paper Size

With AirPrint, the paper size is selected automatically according to the application being used on the iOS device and the region in which AirPrint is used.

When you use the photo application, the default paper size is L size in Japan, and 4"x6" or KG in other countries and regions.
When you use the document application, the default paper size is letter size in the U.S. region, and A4 in Japan and Europe.

Important

- Depending on the device or OS, the initial settings of paper size may differ from the above mentioned.
  Test printing is recommended.
- Depending on the application you are using, the available paper size may differ.

Printing of Envelopes

For printing on the envelope from iOS device with AirPrint, refer to the following.

Print result image	Orientation of print data	Orientation of loading envelope
	The print data is rotated by 180 degrees against the print result image.	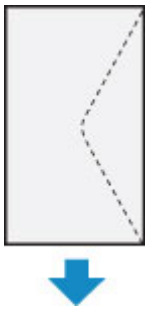 Load the envelope in vertically with the address side facing up so that the folded flap of the envelope will be faced down on the right side.

Checking Print Status

You can check the print status of AirPrint from **Print Center**.
Click the **Home** button in the iOS device twice to switch to multitask mode, swipe towards the right to display **Print Center**, then tap on it.

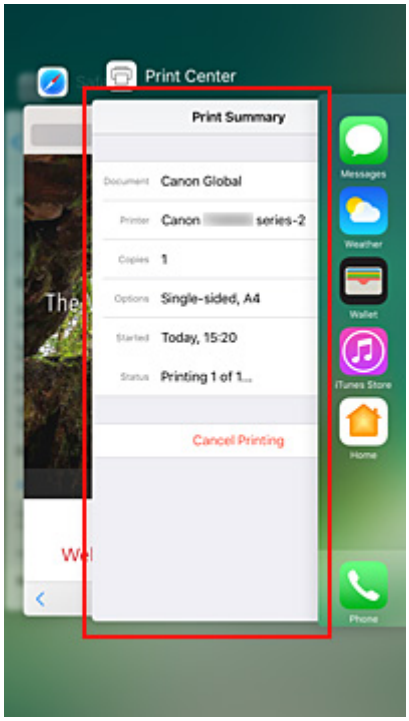

Deleting Print Job

To delete a print job with AirPrint, use one of the following two methods:

- From printer: Use **Stop** button to cancel the print job.
- From iOS device: Click the **Home** button in the iOS device twice to switch to multitask mode, swipe towards the right to display **Print Center**, then tap on it. In the screen that appears, tap on the print job to be deleted, and then tap **Cancel Printing**.

Printing/Scanning with Wireless Direct

You can connect devices (e.g. smartphone, or tablet) to the printer by two methods below.

- Wireless connection (connecting devices via a wireless router)
- Direct wireless connection (connecting devices using Wireless Direct)

This section describes Wireless Direct, which allows you to print or scan by connecting the devices to the printer directly.

Follow the procedure below to use Wireless Direct.

1. Enable Wireless Direct.
2. Connect devices to printer.
3. Perform printing or scanning operation.

Important

- You can connect up to 5 devices to the printer at the same time.
- Check the usage restrictions and switch the printer to the Wireless Direct.

  Restrictions

Preparing for Wireless Direct

Change settings below to prepare for Wireless Direct.

- Printer's LAN settings

  Enabling Wireless Direct of Printer

- Settings of a device to connect

  Connecting the Device to the Printer

Enabling Wireless Direct of Printer

1. Make sure printer is turned on.
2. Select **Setup** on the HOME screen.

   Using the Operation Panel

3. Select **Settings**.
4. Select **Device settings**.
5. Select **LAN settings**.
6. Select **Wireless Direct**.

7. Select **Wireless Direct active/inactive**.

8. Select **ON**.

   The confirmation screen asking if you display the password information appears.

9. Select **Yes** or **No**.

   The list of Wireless Direct settings is displayed.

   The device detects the printer by the identifier (SSID).

   Note

   - You can check the following.
     - SSID
     - Security setting
     - Password
     - Printer's name which appears on a Wi-Fi Direct compatible device

     The password is required when connecting a device to the printer. Depending on the device you are using, no password is required.

     When you connect a Wi-Fi Direct compatible device to the printer, select the device name displayed on the touch screen from your device.
   - The identifier (SSID) and the security setting are specified automatically. To update them, see below.

     Changing Wireless Direct Setting

10. Select **OK**.

    The Wireless Direct is enabled and a device can be connected to the printer wirelessly.

Connecting the Device to the Printer

1. Turn on wireless communication on your device.

   Enable "Wi-Fi" on your device's "Setting" menu.

   For more on turning on wireless communication, see your device's instruction manual.

2. Select "DIRECT-XXXX-TS6100series" ("X" represents alphanumeric characters) from list displayed on device.

   Note

   - If "DIRECT-XXXX-TS6100series" does not appear on the list, Wireless Direct is not enabled.

     See Enabling Wireless Direct of Printer to enable Wireless Direct.

3. Enter password.

Your device is connected to the printer.

Note

- Check the password for the Wireless Direct.

  Check by one of the following methods.

  - Display on the touch screen.

    LAN settings

  - Print the network settings.

    Printing Network Settings

- Depending on the device you are using, entering the password is required to connect a device to the printer via wireless LAN. Enter the password specified for the printer.
- If your Wi-Fi Direct compatible device is set to prioritize using Wi-Fi Direct and it is connecting to the printer, the printer displays a confirmation screen asking if you allow the device to connect to the printer.

  Make sure the name on the touch screen is the same as that of your wireless communication device and select **Yes**.

Printing/Scanning with Wireless Direct

Connect a device and the printer and start printing/scanning.

Note

- For more on printing or scanning from a device via wireless LAN, refer to the device's or application's instruction manual.
- You can print/scan from your smartphone or tablet by installing Canon PRINT Inkjet/SELPHY. Download it from App Store and Google Play.

  For iOS

  For Android

Changing Wireless Direct Setting

Change the settings for the Wireless Direct following the procedure below.

1. Make sure printer is turned on.

2. Select **Setup** on the HOME screen.

   Using the Operation Panel

3. Select **Settings**.

4. Select **Device settings**.

5. Select **LAN settings**.

6. Select **Wireless Direct**.

7. Select a setting item.

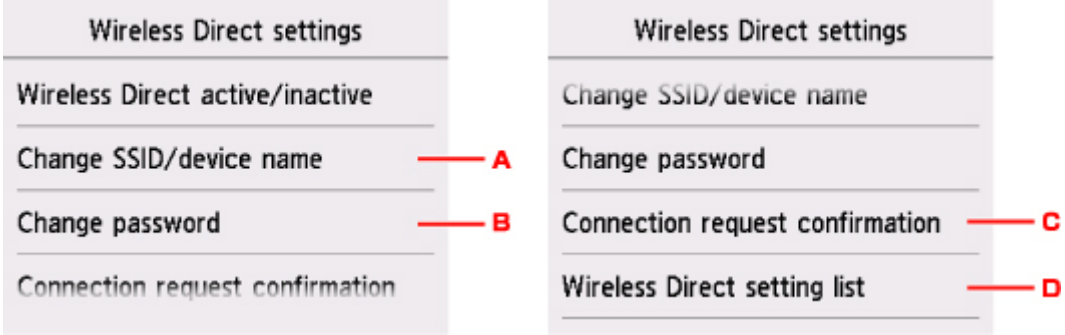

- To change the identifier (SSID) for Wireless Direct

  Select A to display the setting screen of the identifier (SSID).

  The identifier (SSID) is the printer's name (device name) displayed on a Wi-Fi Direct compatible device.

  Follow the procedure below to change the identifier (SSID).

  1. Select the entry field.
  2. Enter the identifier (SSID) (up to 32 characters).
  3. Select **Auto update** or **OK**.

     Selecting **OK** finishes specifying the identifier (SSID).

     Selecting **Auto update** displays the confirmation screen. To update the identifier (SSID) and the password, select **Yes**. To check the security setting and the updated identifier (SSID)/ password, select **Details** and select **Yes** on the screen displayed next.

- To change the password for Wireless Direct

  Select B to display the setting screen of the password.

  Follow the procedure below to change the password.

  1. Select the entry field.
  2. Enter the password (up to 10 characters).
  3. Select **Auto update** or **OK**.

     Selecting **OK** finishes specifying the password.

     Selecting **Auto update** displays the confirmation screen. To update the identifier (SSID) and the password, select **Yes**. To check the security setting and the updated identifier (SSID)/ password, select **Details** and select **Yes** on the screen displayed next.

- To change the confirmation screen setting when a Wi-Fi Direct compatible device is connecting to the printer

  Select C to display the confirmation screen. If you want the printer to display the screen to inform you a Wi-Fi direct compatible device is connecting to the printer, select **Yes**.

  Important

  - To prevent an unauthorized access, we recommend you should not change the setting from the default.

- To check the current Wireless Direct settings

  Select D to display the confirmation screen. To check the current Wireless Direct settings, select **Yes**.

  Note

  - If you select **Print details**, you can print the network settings.

8. Press **HOME** button.

   The HOME screen is displayed.

Note

- If you change the Wireless Direct setting of the printer, also change the wireless router setting of the device.

Printing Using Operation Panel

- Printing Templates Such as Lined or Graph Paper

Printing Templates Such as Lined or Graph Paper

You can print a template form such as lined paper, graph paper, or checklist, etc. on A4, B5, or Letter-sized plain paper.

- Printable template forms
- Printing template forms

Printable template forms

The following templates are available:

- **Notebook paper**

You can select three line spacing formats.

Setting on the touch screen:

  - **Notebook paper 1 (8 mm)**
  - **Notebook paper 2 (7 mm)**
  - **Notebook paper 3 (6 mm)**

Note

- You cannot print Notebook paper on B5 sized paper.

- **Graph paper**

You can select two square sizes.

Setting on the touch screen:

  - **Graph paper 1 (5 mm grid)**
  - **Graph paper 2 (3 mm grid)**

Note

- You cannot print Graph paper on B5 sized paper.

- **Checklist**

You can print a notepad with checkboxes.

Setting on the touch screen:

Checklist

- **Staff paper**

You can print staff paper with 10 or 12 staves.

Setting on the touch screen:

  - **Staff paper 1 (10 staves)**
  - **Staff paper 2 (12 staves)**

- **Handwriting paper**

You can print handwriting paper.

Setting on the touch screen:

Handwriting paper (3 lines)

- **Weekly schedule**

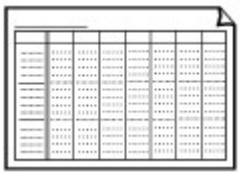

You can print a weekly schedule form.

Setting on the touch screen:

Weekly schedule (vertical)

- **Monthly schedule**

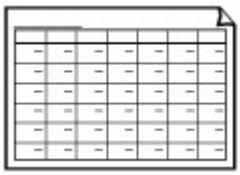

You can print a monthly schedule form.

Setting on the touch screen:

Monthly schedule(calendar)

Printing template forms

Print template form following the procedure below.

1. Make sure printer is turned on.

2. Load A4, B5, or Letter-sized plain paper.

3. Select **Print** on the HOME screen.

   Using the Operation Panel

4. Select **Templates**.

5. Select template you want to print.

   Printable template forms

6. Specify settings as necessary.

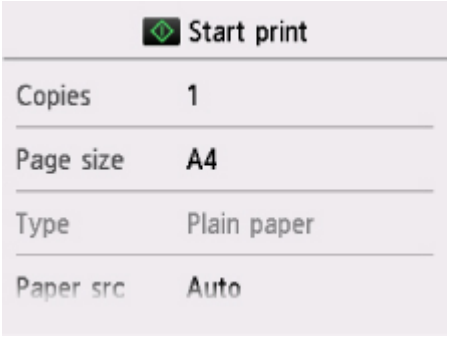

   - **Copies**

     Specify the number of copies.

   - **Page size**

     Select the page size depending on the loaded paper.

     Note

     - Depending on the form, some setting of page size cannot be specified. If it is selected, and **Error details** are displayed on the touch screen. In this case, select on the upper left on the touch screen to check the message and change the setting.

   - **Type** (Media type)

     The paper type is set to **Plain paper**.

   - **Paper src**

     Select a paper source (**Rear tray**/**Cassette**/**Auto**) where paper is loaded.

     Note

     - When **Auto** is selected, paper is fed from the paper source where the paper that matches the paper settings (page size and media type) is loaded.

   - **2-sidedPrintSetting**

     Select two-sided printing or single-sided printing.

7. Start printing.

   Press the **Color** button for printing following forms.

   - **Notebook paper 1 (8 mm)**
   - **Notebook paper 2 (7 mm)**

- **Notebook paper 3 (6 mm)**
- **Graph paper 1 (5 mm grid)**
- **Graph paper 2 (3 mm grid)**
- **Handwriting paper (3 lines)**

Press the **Black** button for printing following forms.

- **Checklist**
- **Staff paper 1 (10 staves)**
- **Staff paper 2 (12 staves)**
- **Weekly schedule (vertical)**
- **Monthly schedule(calendar)**

Paper Settings

By registering the paper size and the media type loaded on the rear tray or in the cassette, you can prevent the printer from misprinting by displaying the message before printing starts when the paper size or the media type of the loaded paper differs from the print settings.

Note

- The default display setting is different between when you print or copy from the operation panel of the printer and when you print using the printer driver.

  Default Setting for Displaying the Message which Prevents Misprinting

After loading paper:

- **When you close the feed slot cover:**

The screen to register the rear tray paper information is displayed.

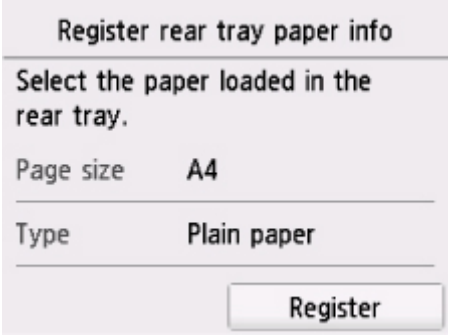

Register the paper size and the media type according to the loaded paper.

- **When you insert the cassette:**

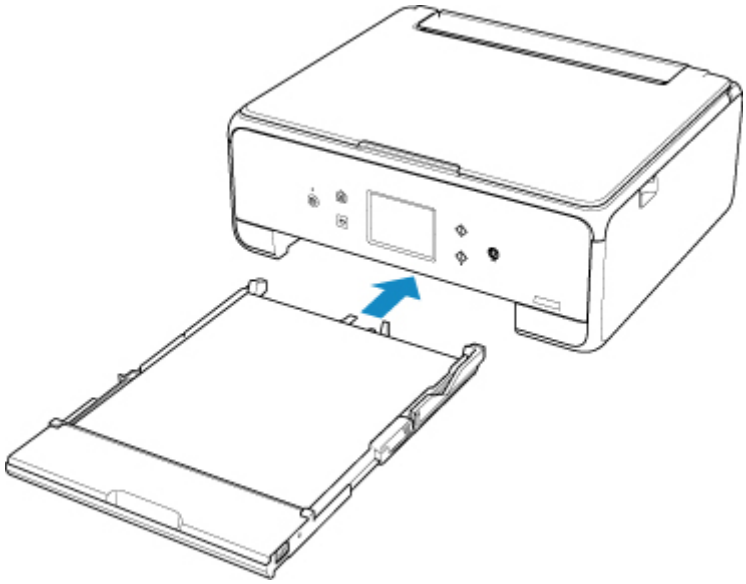

The screen to register the cassette paper information is displayed.

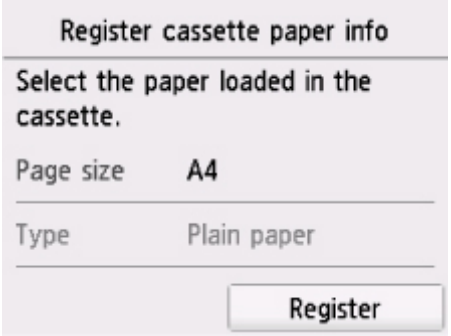

Register the paper size and the media type according to the loaded paper.

* You can load only plain paper in the cassette.

Important

- For more on the proper combination of paper settings you can specify by the printer driver (Windows) or on the touch screen:
  - Paper Settings on the Printer Driver and the Printer (Media Type)
  - Paper Settings on the Printer Driver and the Printer (Paper Size)

When the paper settings for printing or copying are different from the paper information registered to the printer:

Ex:

- Paper setting for printing or copying: A5
- Paper information registered to the printer: A4

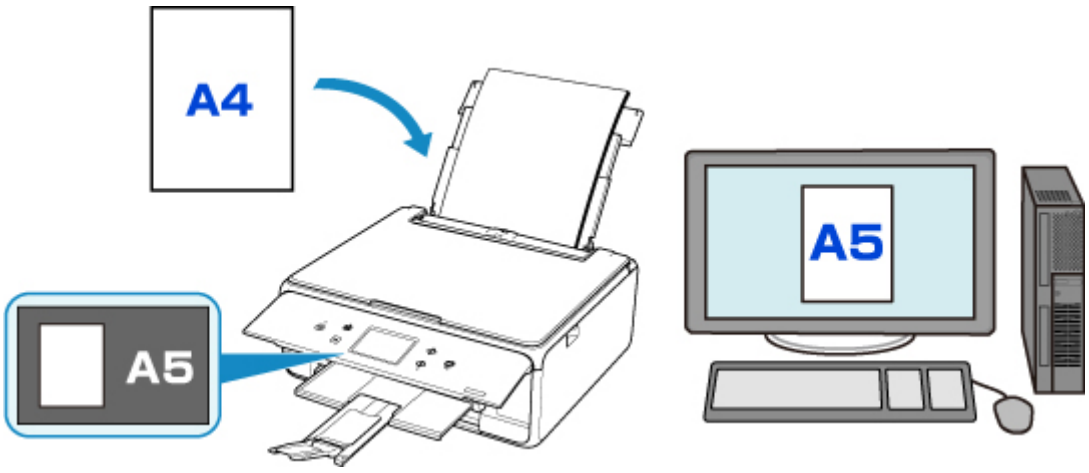

When you start printing or copying, a message is displayed.

Selecting **OK** on the touch screen displays the paper setting specified for printing or copying under the message.

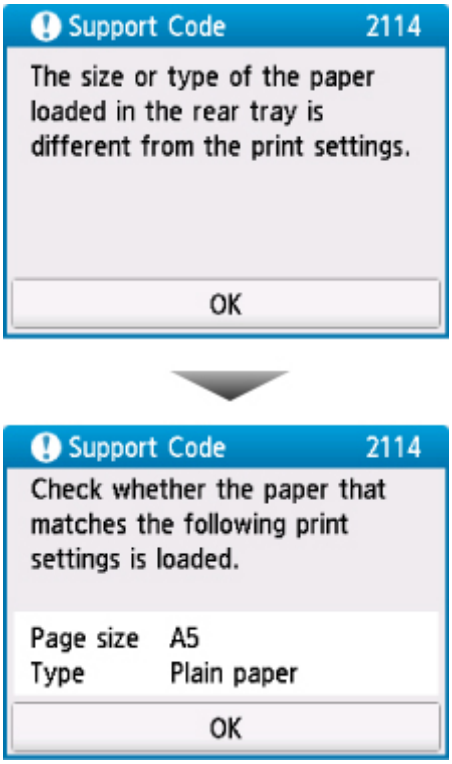

Check the message and select **OK**. When the screen to select the operation is displayed, select one of the operations below.

Note

- Depending on the setting, the choices below may not be displayed.

Print with the loaded paper.

Select if you want to print on the paper loaded without changing the paper settings.

For example, when the paper setting for printing or copying is A5 and the paper information registered to the printer is A4, the printer starts printing or copying with A5 on the paper loaded.

Replace the paper and print

Select if you want to print after replacing the paper of the rear tray or the cassette.

For example, when the paper setting for printing or copying is A5 and the paper information registered to the printer is A4, you load A5 sized paper before you start printing or copying.

The paper information registration screen is displayed after replacing the paper and closing the feed slot cover or inserting the cassette. Register the paper information according to the paper that you loaded.

Note

- If you do not know what paper information to register to the printer, press the **Back** button when the screen to select the operation is displayed. When the previous screen is displayed, check the paper size and the media type and register them to the printer.
- For more on the proper combination of paper settings you can specify by the printer driver (Windows) or on the touch screen:

  - Paper Settings on the Printer Driver and the Printer (Media Type)
  - Paper Settings on the Printer Driver and the Printer (Paper Size)

Cancel

Cancels printing.

Select when you change the paper settings specified for printing or copying. Change the paper settings and try printing again.

Default Setting for Displaying the Message which Prevents Misprinting

- **When you print using the operation panel of the printer:**

  The message which prevents misprinting is enabled by default.

  To change the display setting when you copy or print using the operation panel of the printer:

  - Feed settings

- **When you print from Windows:**

  The message which prevents misprinting is disabled by default.

  To change the display setting:

  - Changing the Printer Operation Mode

- **When you print from Mac OS:**

  The message which prevents misprinting is enabled by default.

  To change the display setting:

  - Changing the Printer Operation Mode

Important

- When the message which prevents misprinting is disabled:

  The printer starts printing or copying even though the paper settings for printing or copying and the paper information registered to the printer are different.

Copying

Making Copies Basics

Reducing/Enlarging Copies

Two-Sided Copying

Special Copy Menu

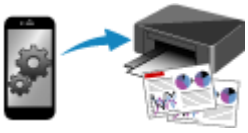

Copying Using Smartphone or Tablet

Making Copies

This section describes the procedure to copy with **Standard copy**.

1. Make sure printer is turned on.

2. Load paper.

3. Select **Copy** on the HOME screen.

   Using the Operation Panel

4. Select **Standard copy**.

   The Copy standby screen is displayed.

5. Load original on platen glass.

6. Specify settings as necessary.

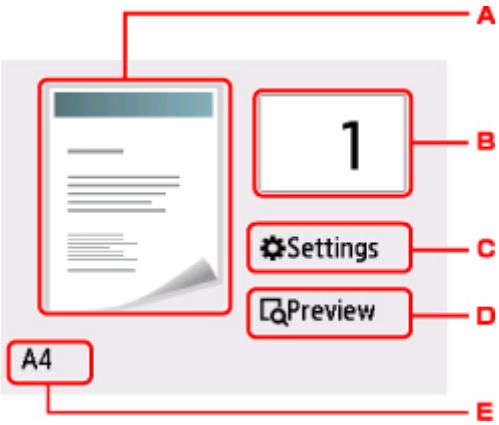

   A. The copy layout is displayed.

      Switch the layout from (single-sided), (2-on-1), (two-sided).

   B. Specify the number of copies.

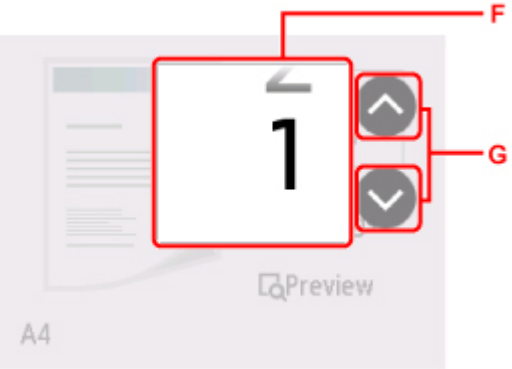

F. Flick to specify the number of copies.

G. Specify the number of copies.

If you keep touching here, the number scrolls by 10.

C. Display the print setting items.

For more on the setting items:

- Setting Items for Copying

D. Preview an image of the printout on the preview screen.

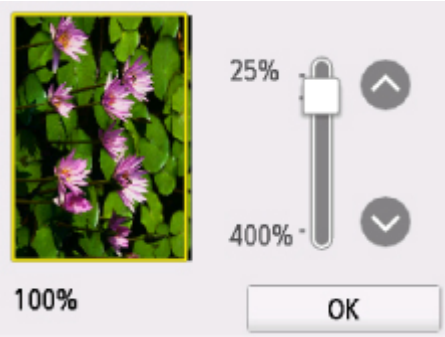

For details:

- Displaying Preview Screen

E. Specify the page size.

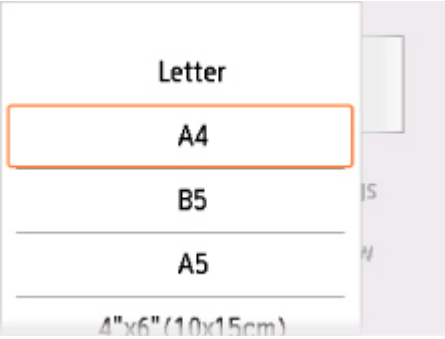

7. Press **Color** button for color copying, or **Black** button for black & white copying.

   The printer starts copying.

   Remove the original on the platen glass after copying is complete.

   Important

   - Do not open the document cover or remove the original from the platen glass until scanning is completed.

   Note

   - To cancel copying, press the **Stop** button.

Adding Copying Job (Reserve copy)

You can add the copying job while printing (Reserve copy).

The screen below is displayed when you can add the copying job.

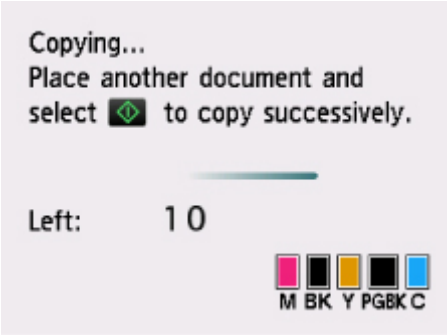

Load the original on the platen glass and press the same button (the **Color** button or the **Black** button) as the one which you previously pressed.

Important

- When you load the original on the platen glass, move the document cover gently.

Note

- When **Print qlty** (print quality) is set **High**, you cannot add the copying job.
- When you add the copying job, the number of copies or the settings such as the page size or media type cannot be changed.

- If you press the **Stop** button while reserve copying is in progress, the screen to select the method to cancel copying is displayed. If you select **Cancel all reservations**, you can cancel copying all scanned data. If you select **Cancel the last reservation**, you can cancel the last copying job.
- If you set a document of too many pages to add the copying job, **Cannot add more copy jobs. Please wait a while and redo the operation.** may appear on the touch screen. Select **OK** and wait a while, and then try copying again.
- If **Failed to reserve the copy job. Start over from the beginning.** appears on the touch screen when scanning, select **OK** and press the **Stop** button to cancel copying. After that, copy the documents that have not been finished copying.

Setting Items for Copying

You can change the copy settings such as magnification and intensity.

Print Settings Screen

Note

- For more on the print setting screen or the setting item for **Photo copy**, see Copying Photos.

How to display the print setting screen varies with the copy menu.

- In **Standard copy**:

  The following screen is displayed by selecting **Settings** on the Copy standby screen.

- In **Borderless copy**, **Frame erase copy**, or **ID card copy**:

  The following screen is displayed before copying.

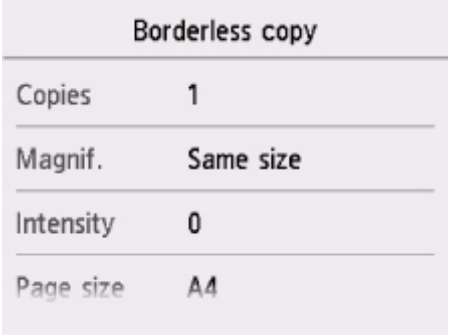

Setting Items

Flick to display setting items and select the setting item to display the settings. Select to specify the setting.

Note

- Depending on the copy menu, some setting items cannot be selected. This section describes the setting items in **Copy**.

  The setting item which cannot be selected is displayed grayed out.

  For more on the setting items for **Photo copy**, see Copying Photos.

- Some settings cannot be specified in combination with the setting of other setting item or the copy menu. If the setting which cannot be specified in combination is selected, and **Error details** are

displayed on the touch screen. In this case, select on the upper left on the touch screen to check the message and change the setting.

- The settings of the page size, media type, etc. are retained even if the printer is turned off.
- When copying starts in the copy menu that is not available with the specified setting, **The specified function is not available with current settings.** is displayed on the touch screen. Change the setting, following the on-screen instructions.

Following setting items can be changed.

- **Magnif.** (Magnification)

  Specify the reduction/enlargement method.

  Reducing/Enlarging Copies

- **Intensity**

  Specify the intensity.

  A. Activate/deactivate automatic intensity adjustment.

     When **ON** is selected, the intensity is adjusted automatically according to the originals loaded on the platen glass.

  B. Drag to specify the intensity.

- **Page size**

  Select the page size of the loaded paper.

- **Type** (Media type)

  Select the media type of the loaded paper.

- **Paper src**

  Select a paper source (**Rear tray**/**Cassette**/**Auto**) where paper is loaded.

  Note

  - When **Auto** is selected, paper is fed from the paper source where the paper that matches the paper settings (page size and media type) is loaded.

- **Print qlty** (Print quality)

  Adjust print quality according to the original.

Important

- If you use **Draft** with **Type** set to **Plain paper** and the quality is not as good as expected, select **Standard** or **High** for **Print qlty** and try copying again.
- Select **High** for **Print qlty** to copy in grayscale. Grayscale renders tones in a range of grays instead of black or white.

- **Layout**

  Select the layout.

  - Copying Two Pages onto Single Page
  - Copying Four Pages onto Single Page

- **2-sidedPrintSetting**

  Select whether to perform two-sided copying.

  - Two-Sided Copying

Scanning

Scanning from Computer (Windows)

Scanning from Computer (AirPrint)

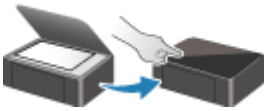

Scanning from Operation Panel

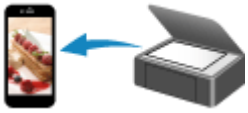

Scanning Using Smartphone/Tablet

Scanning from Computer (AirPrint)

- **Scanning According to Item Type or Purpose (IJ Scan Utility Lite)**
  - IJ Scan Utility Lite Features
  - Scanning Easily (Auto Scan) **Basics**
  - Scanning Documents and Photos
- **Scanning Tips**
  - Positioning Originals (Scanning from Computer)

Scanning According to Item Type or Purpose (IJ Scan Utility Lite)

- IJ Scan Utility Lite Features
- Scanning Easily (Auto Scan) Basics
- Scanning Documents and Photos

Important

- Available functions and settings vary depending on your scanner or printer.

IJ Scan Utility Lite Features

Use IJ Scan Utility Lite to scan and save documents, photos, or other items at one time by simply clicking the corresponding icon.

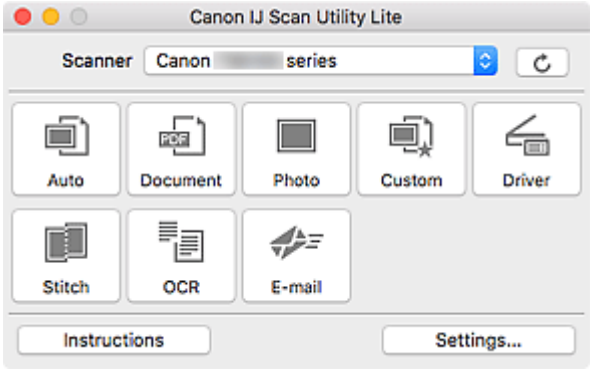

Important

- The displayed items and available functions vary depending on your scanner or printer.

Multiple Scanning Modes

Auto allows for one click scanning with default settings for various items. **Document** will sharpen text in a document or magazine for better readability, and **Photo** is best suited for scanning photos.

Note

- For details on the IJ Scan Utility Lite main screen, see IJ Scan Utility Lite Main Screen.

Save Scanned Images Automatically

Scanned images are automatically saved to a preset folder. The folder can be changed as needed.

Note

- The default save folder is the **Pictures** folder.
- For how to specify a folder, see Settings Dialog.

Application Integration

Scanned images can be sent to other applications. For example, display scanned images in your favorite graphics application, attach them to e-mails, or extract text from images.

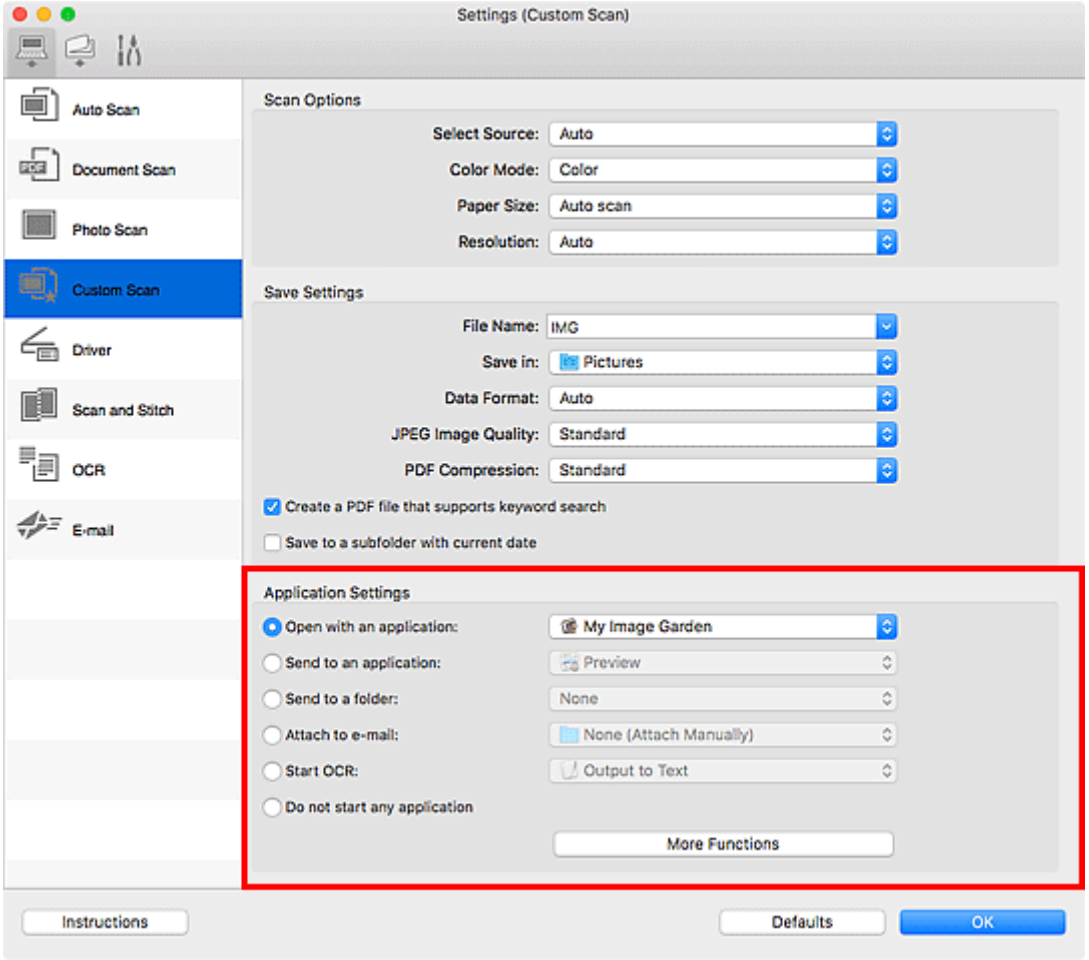

Note

- To set the applications to integrate with, see Settings Dialog.

Scanning Easily (Auto Scan)

Auto Scan allows for automatic detection of the type of the item placed on the platen or ADF (Auto Document Feeder).

Important

- This function is not supported depending on your model.
- The following types of items may not be scanned correctly. In that case, adjust the cropping frames (selection boxes; scan areas) in the screen displayed by clicking **Driver** in the IJ Scan Utility Lite main screen, and then scan again.
  - Photos with a whitish background
  - Items printed on white paper, hand-written text, business cards, and other unclear items
  - Thin items
  - Thick items
- When scanning two or more documents from the ADF, place documents of the same size.

1. Make sure scanner or printer is turned on.

2. Place items on platen or ADF.

   Positioning Originals (Scanning from Computer)

3. Start IJ Scan Utility Lite.

4. Click **Auto**.

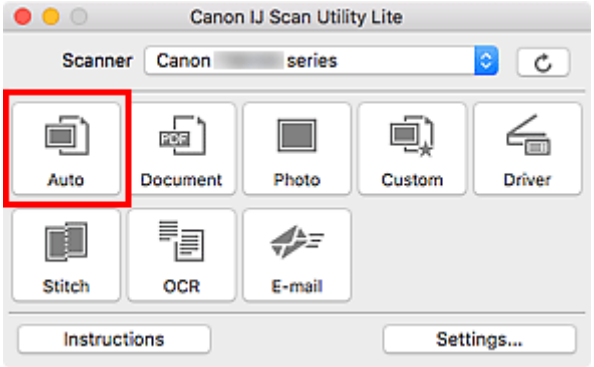

   Scanning starts.

Note

- To cancel the scan, click **Cancel**.
- Use the **Settings (Auto Scan)** dialog to set where to save the scanned images and to make advanced scan settings.
- To scan a specific item type, see the following pages.

  Scanning Documents and Photos
  Scanning with Favorite Settings

Scanning Multiple Documents at One Time from the ADF (Auto Document Feeder)

Scanning Documents and Photos

Scan items placed on the platen with settings suitable for documents or photos.

Save documents in formats such as PDF and JPEG, and photos in formats such as JPEG and TIFF.

1. Place the item on the platen.

   Positioning Originals (Scanning from Computer)

2. Start IJ Scan Utility Lite.

3. To specify the paper size, resolution, PDF settings, etc., click **Settings...**, and then set each item in the Settings dialog.

   Note

   - Once settings are made in the Settings dialog, the same settings can be used for scanning from the next time.
   - In the Settings dialog, specify image processing settings such as slant correction, set where to save the scanned images, and more, as needed.

   When setting is completed, click **OK**.

4. Click **Document** or **Photo**.

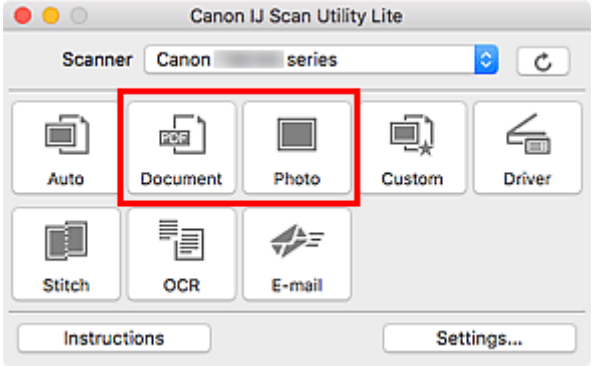

   Scanning starts.

Note

- To cancel the scan, click **Cancel**.

Scanning Tips

- Positioning Originals (Scanning from Computer)

Positioning Originals (Scanning from Computer)

This section describes how to load originals on the platen or ADF (Auto Document Feeder) for scanning. If items are not placed correctly they may not be scanned correctly.

Important

- Do not place objects on the document cover. When you open the document cover, the objects may fall into your scanner or printer, resulting in malfunction.
- Close the document cover when scanning.
- Do not touch the operation panel buttons or LCD (Liquid Crystal Display) when opening/closing the document cover. May result in unintended operation.

- Placing Items (Platen)
- Placing Documents (ADF (Auto Document Feeder))

Placing Items (Platen)

Place items as described below to scan by detecting the item type and size automatically.

Important

- Depending on your model, the function to scan by automatically detecting the item type and size does not appear.
- When scanning by specifying the paper size, align an upper corner of the item with the corner at the arrow (alignment mark) of the platen.
- Photos that have been cut to irregular shapes and items smaller than 1.2 inches (3 cm) square cannot be cropped accurately when scanning.
- Reflective disc labels may not be scanned as expected.
- If scanned by detecting the item type and size automatically, the response may differ. In that case, adjust the cropping frame (selection box) manually.

Photos, Postcards, Business Cards, and BD/DVD/CD	Magazines, Newspapers, and Documents
Single item: Place the item face-down on the platen, with 0.4 inch (1 cm) or more space between the edges (diagonally striped area) of the platen and the item. Portions placed on the diagonally striped area cannot be scanned.	Place the item face-down on the platen and align an upper corner of the item with the corner at the arrow (alignment mark) of the platen. Portions placed on the diagonally striped area cannot be scanned.

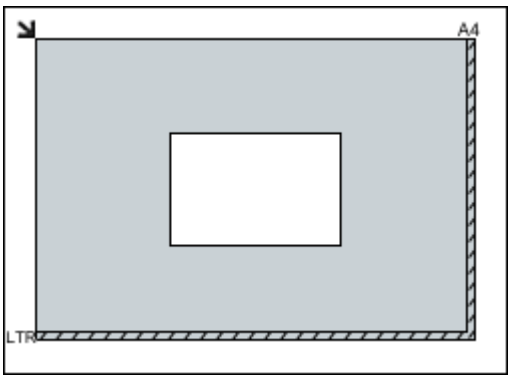

Important

- Large items (such as A4 size photos) that cannot be placed away from the edges/arrow (alignment mark) of the platen may be saved as PDF files. To save in a format other than PDF, scan by specifying the data format.

Multiple items:

Allow 0.4 inch (1 cm) or more space between the edges (diagonally striped area) of the platen and items, and between items. Portions placed on the diagonally striped area cannot be scanned.

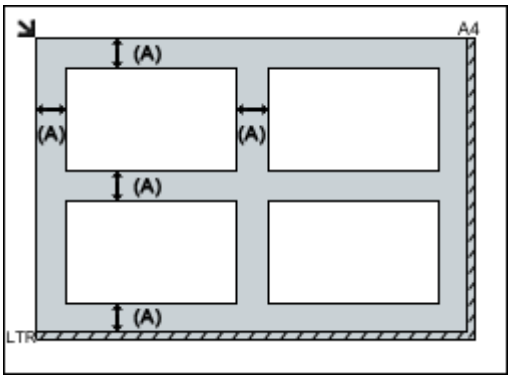

(A) 0.4 inch (1 cm) or more

Note

- In IJ Scan Utility Lite, place up to 12 items.
- Positions of slanted items (10 degrees or less) are corrected automatically.

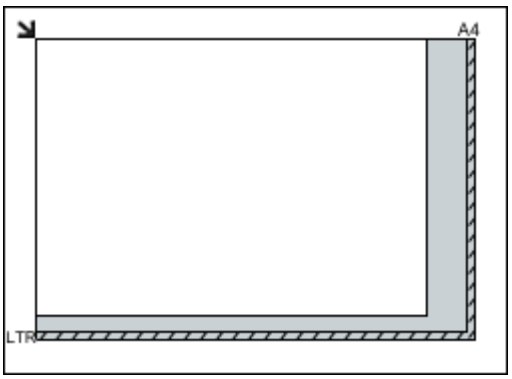

Important

- For the portions in which items cannot be scanned, click Home to return to the top page of the Online Manual for your model and search for "Loading Originals."

Placing Documents (ADF (Auto Document Feeder))

Important

- Do not leave thick items on the platen when scanning from the ADF. May result in paper jam.
- Place and align documents of the same size when scanning two or more documents.
- For supported document sizes when scanning from the ADF, click Home to return to the top page of the Online Manual for your model and search for "Supported Originals."

1. Open document tray.

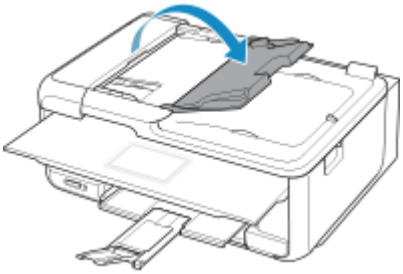

2. Place documents on ADF, and then adjust document guides to width of documents.

   Insert the documents face-up until a beep sounds.

   To scan both sides of the documents, place the documents face-up.

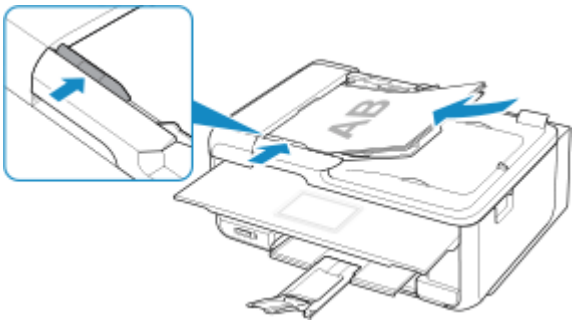

Note

- When scanning duplex documents, place the front sides facing up. They will not be scanned correctly if placed the other way around.

Frequently Asked Questions

Network

- Cannot Find Printer on Network
- Cannot Find Printer while Using Wireless LAN
- Network Key Unknown
- Cannot Print or Connect

For other questions about network, click here.

Print

- Printing Does Not Start
- Paper Is Blank/Printing Is Blurry/Colors Are Wrong/White Streaks Appear
- Print Results Are Unsatisfactory
- List of Support Code for Error (Paper Jams)
- Cannot Print or Connect

Installation

- Cannot Install MP Drivers (Windows)

Error

- An Error Occurs
- Message (Support Code) Appears

Examples of Problems

Printer Does Not Work

- Power Does Not Come On
- Power Shuts Off By Itself
- Display on Touch Screen Is Off
- USB Connection Problems
- Cannot Communicate with Printer via USB

- Printing Does Not Start
- Copying/Printing Stops
- Cannot Print Using AirPrint
- Printing Is Slow
- No Ink Comes Out
- List of Support Code for Error (Paper Jams)
- Paper Does Not Feed Properly/"No Paper" Error
- Automatic Duplex Printing Problems
- Print Results Are Unsatisfactory

- Scanning Problems (Windows)
- Scanning Problems (Mac OS)

- Scan Results Are Unsatisfactory (Windows)
- Scan Results Are Unsatisfactory (Mac OS)
- Cannot Print/Scan from Smartphone/Tablet

Cannot Set Correctly (Network)

- Cannot Find Printer on Check Printer Settings Screen During Setup (Windows)
- Cannot Find Printer while Using Wireless LAN
- Printer Suddenly Cannot Be Used
- Network Key Unknown
- Administrator Password Set for Printer Unknown
- Printer Cannot Be Used After Replacing Wireless Router or Changing Its Settings
- Message Appears on Computer During Setup
- Checking Network Information
- Restoring to Factory Defaults

Cannot Set Correctly (Installation)

- Cannot Install MP Drivers (Windows)
- Easy-WebPrint EX Does Not Start or Easy-WebPrint EX Menu Does Not Appear (Windows)
- Updating MP Drivers in Network Environment (Windows)

Error or Message Appears

- An Error Occurs
- Message (Support Code) Appears
- Error Message Appears on PictBridge (Wireless LAN) Compliant Device
- List of Support Code for Error
- IJ Scan Utility Error Messages (Windows)
- IJ Scan Utility Lite Error Messages (Mac OS)
- ScanGear (Scanner Driver) Error Messages (Windows)

Operation Problems

- Network Communication Problems
- Printing Problems
- Problems while Printing/Scanning from Smartphone/Tablet
- Scanning Problems (Windows)
- Scanning Problems (Mac OS)
- Mechanical Problems
- Installation and Download Problems
- Errors and Messages
- If You Cannot Solve a Problem

Network Settings and Common Problems

Here are frequently asked questions on network. Select a connection method you are using, or you want to use.

Wireless LAN

Cannot Find Printer

- Cannot Find Printer while Using Wireless LAN
- Cannot Find Printer on Check Printer Settings Screen During Setup (Windows)
- Cannot Proceed beyond Printer Connection Screen
- Cannot Find Printer after Searching it on Printer Detection Screen During Setup
- Searching Printer by IP Address or Host Name During Setup
- Error Occurs During Wireless LAN Setup
- Another Printer Found with Same Name
- Changing Wireless LAN Connection Method

Cannot Print or Connect

- Printer Suddenly Cannot Be Used
- Printer Cannot Be Used After Replacing Wireless Router or Changing Its Settings
- Cannot Access to Internet on Wireless LAN from Communication Device
- Connecting Printer and Wireless Router Using Easy wireless connect
- Cannot Connect Smartphone/Tablet to Wireless Router
- Error Occurs During Wireless LAN Setup
- Connecting to Another Computer via LAN/Changing from USB to LAN Connection
- Cannot Print or Connect

LAN Setting Tips/Changing LAN Settings

- Network Key Unknown
- Administrator Password Set for Printer Unknown
- Checking Network Information
- Restoring to Factory Defaults
- Checking Wireless Router SSID/Key
- Checking Wireless Router SSID for Smartphone/Tablet
- Privacy Separator/SSID Separator/Network Separation Function
- Default Network Settings
- Connecting to Another Computer via LAN/Changing from USB to LAN Connection
- Printing Network Settings
- Changing Wireless LAN Connection Method
- Checking Status Code

Printing/Scanning from Smartphone/Tablet

- Connecting Printer and Wireless Router Using Easy wireless connect
- Cannot Connect Smartphone/Tablet to Wireless Router
- Checking Wireless Router SSID for Smartphone/Tablet
- Setting Up Using Smartphone/Tablet
- Cannot Print/Scan from Smartphone/Tablet
- Downloading Canon PRINT Inkjet/SELPHY

Problems while Using Printer

- Message Appears on Computer During Setup
- Printing Is Slow
- Ink Level Not Shown on Printer Status Monitor (Windows)
- Packets Are Sent Constantly (Windows)

Wireless Direct

Cannot Print or Connect

- Printer Suddenly Cannot Be Used
- Cannot Access to Internet on Wireless LAN from Communication Device
- Cannot Print or Connect

LAN Setting Tips/Changing LAN Settings

- Network Key Unknown
- Administrator Password Set for Printer Unknown
- Checking Network Information
- Restoring to Factory Defaults
- Printing Network Settings
- Default Network Settings
- Changing Wireless LAN Connection Method
- Checking Status Code

Printing/Scanning from Smartphone/Tablet

- Cannot Print/Scan from Smartphone/Tablet
- Downloading Canon PRINT Inkjet/SELPHY

Problems while Using Printer

- Message Appears on Computer During Setup
- Printing Is Slow
- Ink Level Not Shown on Printer Status Monitor (Windows)

Network Communication Problems

- Cannot Find Printer on Network
- Network Connection Problems
- Other Network Problems

Cannot Find Printer on Network

While performing printer setup:

- Cannot Find Printer on Check Printer Settings Screen During Setup (Windows)
- Cannot Proceed beyond Printer Connection Screen

While using printer:

- Cannot Find Printer while Using Wireless LAN

Cannot Find Printer on Check Printer Settings Screen During Setup (Windows)

If the printer cannot be found and the **Check Printer Settings** screen appears after searching the printer by **Automatic search** on the **Search for Printers** screen, click **Redetect** and search for the printer again by the IP address on the **Search for Printers** screen.

If the printer has not been found after searching it by the IP address, check network settings.

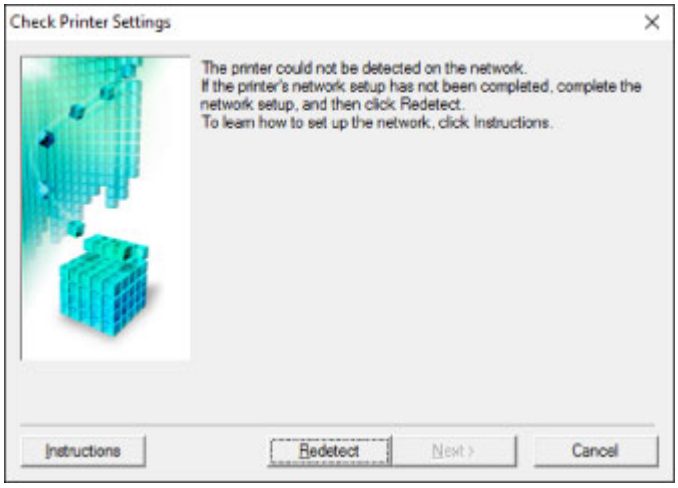

- Cannot Find Printer on Check Printer Settings Screen During Wireless LAN Setup (Windows)-Checking Power Status
- Cannot Find Printer on Check Printer Settings Screen During Wireless LAN Setup (Windows)-Checking PC Network Connection
- Cannot Find Printer on Check Printer Settings Screen During Wireless LAN Setup (Windows)-Checking Printer's Wireless LAN Settings
- Cannot Find Printer on Check Printer Settings Screen During Wireless LAN Setup (Windows)-Checking Wireless LAN Environment
- Cannot Find Printer on Check Printer Settings Screen During Wireless LAN Setup (Windows)-Checking Printer's IP Address
- Cannot Find Printer on Check Printer Settings Screen During Wireless LAN Setup (Windows)-Checking Security Software Settings
- Cannot Find Printer on Check Printer Settings Screen During Wireless LAN Setup (Windows)-Checking Wireless Router Settings

Cannot Find Printer on Check Printer Settings Screen During Wireless LAN Setup (Windows)-Checking Power Status

Are printer and network device (router, etc.) turned on?

Make sure the printer is turned on.

- Confirming that the Power Is On

Make sure network device (router, etc.) is turned on.

If printer or network device is off:

Turn on printer or network device.

It may take a while for the printer and network device to become ready for use once they are turned on. Wait a while after turning on the printer or network device, and then click **Redetect** on the **Check Printer Settings** screen to redetect the printer.

If the printer is found, follow the instructions on the screen to continue to set up network communication.

If printer and network device are on:

If the network devices are on, turn them off and on again.

If above does not solve the problem:

- Cannot Find Printer on Check Printer Settings Screen During Wireless LAN Setup (Windows)-Checking PC Network Connection

Cannot Find Printer on Check Printer Settings Screen During Wireless LAN Setup (Windows)-Checking PC Network Connection

Can you view any web pages on your computer?

Make sure the computer and network device (router, etc.) are configured and the computer is connected to the network.

If you cannot view any web pages:

Click **Cancel** on the **Check Printer Settings** screen to cancel to set up the network communication.

After that, configure the computer and network device.

For the procedures, refer to the instruction manuals supplied with the computer and network device, or contact their manufacturers.

If you can view web pages after configuring the computer and network device, try to set up the network communication from the beginning.

If above does not solve the problem:

- Cannot Find Printer on Check Printer Settings Screen During Wireless LAN Setup (Windows)-Checking Wireless LAN Environment

Cannot Find Printer on Check Printer Settings Screen During Wireless LAN Setup (Windows)-Checking Printer's Wireless LAN Settings

Is printer set to allow wireless communication?

Make sure the or icon is displayed on the touch screen.

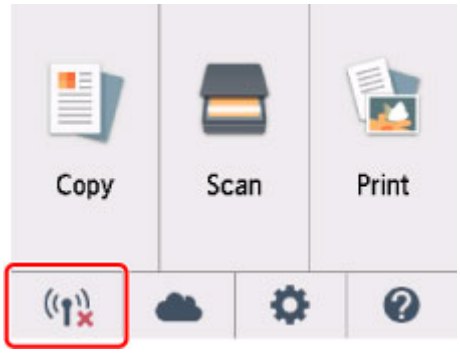

If icon is not displayed:

The printer is not set to allow wireless communication. Turn on wireless communication on the printer.

If icon is displayed:

- Cannot Find Printer on Check Printer Settings Screen During Wireless LAN Setup (Windows)-Checking Wireless LAN Environment

Cannot Find Printer on Check Printer Settings Screen During Wireless LAN Setup (Windows)-Checking Wireless LAN Environment

Is printer connected to wireless router?

Use the icon on the touch screen to make sure the printer is connected to the wireless router.

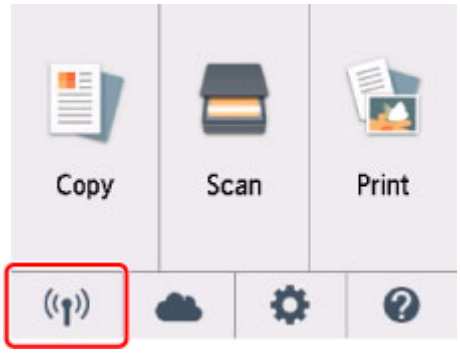

If icon is displayed:

- Checking wireless router location

  After checking the wireless router setting, make sure the printer is not placed far away from the wireless router.

  The printer can be up to 50 m (164 ft) from the wireless router indoors. Make sure the printer is close enough to the wireless router to be used.

  Place the wireless router and printer where there are no obstacles between them. Wireless communication between different rooms or floors is generally poor. Wireless communication can be impeded by building materials containing metal or concrete. If the printer cannot communicate with the computer over a wireless LAN due to a wall, place the printer and the computer in the same room.

  In addition, if a device like a microwave oven that emits radio waves of the same frequency bandwidth as a wireless router is nearby, it may cause interference. Place the wireless router as far away from interference sources as possible.

  Note

  - Though an antenna is attached to most wireless routers, note that some of them have it inside.

- Checking wireless router settings

  The printer and wireless router should be connected using 2.4 GHz bandwidth. Make sure the wireless router for the printer's destination is configured to use 2.4 GHz bandwidth.

Important

- Depending on the wireless router, note that different SSID is assigned for a bandwidth (2.4 GHz or 5 GHz) or its usage (for PC or game machine) using alphanumeric characters at the end of SSID.

Check the SSID of the wireless router for the printer on the touch screen.

Select the icon on the lower left, select **Yes**, and then check **SSID**.

For more on the wireless router, refer to the instruction manual supplied with the wireless router or contact its manufacturer.

After taking measures above, click **Redetect** on the **Check Printer Settings** screen to redetect the printer.

If the printer is found, follow the instructions on the screen to continue to set up network communication.

If the printer cannot be detected, the printer is not connected to the wireless router. Connect the printer to the wireless router.

After connecting the printer to the wireless router, set up the network communication from the beginning.

If icon is displayed:

Cannot Find Printer on Check Printer Settings Screen During Wireless LAN Setup (Windows)-Checking Printer's IP Address

Cannot Find Printer on Check Printer Settings Screen During Wireless LAN Setup (Windows)-Checking Printer's IP Address

Is printer's IP address specified correctly?

If printer's IP address is not specified correctly, the printer may not be found. Make sure whether printer's IP address is not used for another device.

To check the printer's IP address, print out the network settings information or use the operation panel to display it.

- Display on the touch screen.

  LAN settings

- Print the network settings.

  Printing Network Settings

If the IP address is not specified correctly:

See If an error screen appears: and specify the IP address.

If the IP address is specified correctly:

Cannot Find Printer on Check Printer Settings Screen During Wireless LAN Setup (Windows)-Checking Security Software Settings

Cannot Find Printer on Check Printer Settings Screen During Wireless LAN Setup (Windows)-Checking Security Software Settings

Disable block in firewall function temporarily.

The firewall of your security software or operation system for computer may limit communication between the printer and your computer. Check the firewall setting of your security software or operation system or the message shown on your computer and disable block temporarily.

If firewall interferes with setup:

- **If message appears:**

  If a message appears warning that Canon software is attempting to access the network, set the security software to allow access.

  After allowing the software to access, click **Redetect** on the **Check Printer Settings** screen to redetect the printer.

  If the printer is found, follow the instructions on the screen to continue to set up network communication.

- **If no message appears:**

  Cancel the setup, and then set the security software to allow Canon software to access the network.

  The file **Setup.exe** or **Setup64.exe** in the **win** > **Driver** > **DrvSetup** folder on the Setup CD-ROM

  After setting the security software, redo the network communication setup from the beginning.

  After setup is completed, enable firewall.

Note

- For more on firewall settings of your operating system or security software, see instruction manual or contact its manufacturer.

If above does not solve the problem:

Cannot Find Printer on Check Printer Settings Screen During Wireless LAN Setup (Windows)-Checking Wireless Router Settings

Cannot Find Printer on Check Printer Settings Screen During Wireless LAN Setup (Windows)-Checking Wireless Router Settings

Check wireless router settings.

Check wireless router network connection settings, such as IP address filtering, MAC address filtering, encryption key, and DHCP function.

Make sure the same radio channel is assigned to the wireless router and the printer.

To check the settings of the wireless router, see the instruction manual supplied with the wireless router or contact the manufacturer.

After checking the wireless router settings, click **Redetect** on the **Check Printer Settings** screen to redetect the printer.

If the printer is found, follow the instructions on the screen to continue to set up network communication.

Q

Cannot Proceed beyond Printer Connection Screen

A

If you cannot proceed beyond the **Printer Connection** screen, check the following.

Check1 Make sure USB cable is securely plugged in to printer and computer.

Connect the printer and the computer using a USB cable as the illustration below. The USB port is located at the back of the printer.

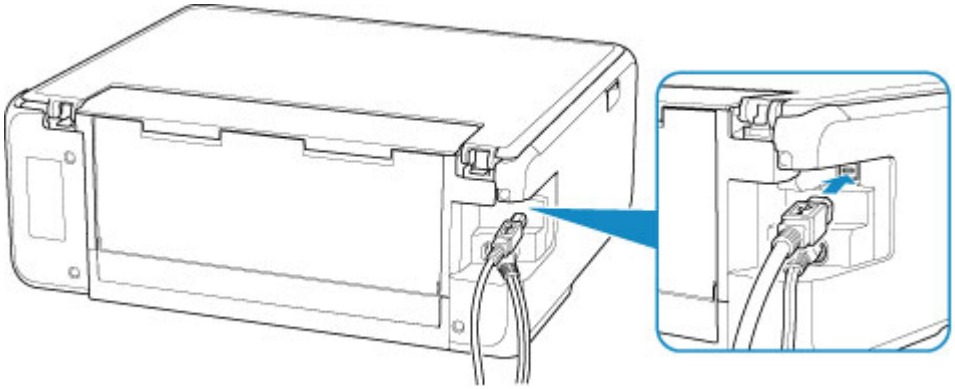

Important

- Connect the "Type-B" terminal to the printer with the notched side facing UP. For details, refer to the instruction manual supplied with the USB cable.

Check2 Follow procedure below to connect printer and computer again.

Important

- For Mac OS, make sure the lock icon is on the lower left of the **Printers & Scanners** screen.

  If the icon (locked) is displayed, click the icon to unlock. (The administrator name and the password are necessary to unlock.)

1. Unplug USB cable from printer and computer and connect it again.
2. Make sure no printer operation is in progress and turn it off.
3. Turn on printer.

Check3 If you cannot resolve problem, follow procedure below to reinstall MP Drivers.

- For Windows:
  1. Click **Cancel**.
  2. Click **Back to Top** on **Setup Canceled** screen.
  3. Click **Exit** on **Start Setup** screen and finish setup.

4. Turn off printer.
5. Restart computer.
6. Make sure you have no application software running.
7. Perform setup on web page.

Note

- You can use the Setup CD-ROM to redo setup.

- For Mac OS:
  1. Click **Next**.
     - If the screen telling you that installation has not been completed appears, click **Abort** on displayed screen and finish setup.
     - If the **Connection failed.** screen appears:
       1. Click **Next**.
       2. Click **Next** on displayed screen.
       3. Click **Back to Top** on **Select Printer** screen.
       4. Click **Exit** on **Start Setup** screen and finish setup.
  3. Turn off printer.
  4. Restart computer.
  5. Make sure you have no application software running.
  6. Perform setup on web page.

Cannot Find Printer while Using Wireless LAN

Check1 Make sure the printer is turned on.

Check2 Check the (**Network status**) icon on the touch screen.

If the icon is displayed, wireless LAN is disabled.

Select **Active** on **WLAN active/inactive** in **Wireless LAN** under **LAN settings**.

If the icon is displayed, see Check 3 or later checking items to make sure whether printer setup is complete or the settings of wireless router to connect are correct.

Check3 Make sure printer setup is complete.

If it is not, perform setup.

- For Windows:

  Perform setup using the Setup CD-ROM or from the web page.

- For Mac OS:

  Perform setup from the web page.

Note

- IJ Network Device Setup Utility allows you to diagnose and repair the network status. Download it from the web page.
  - For Windows
  - For Mac OS

Check4 Make sure printer and wireless router network settings match.

Make sure the network settings of the printer (e.g. wireless router name, SSID, network key, etc.) are identical with those of the wireless router.

To check the settings of the wireless router, refer to the instruction manual provided with it or contact its manufacturer.

Note

- Use 2.4 GHz frequency band to connect to a wireless router. Match the SSID set for the printer with that for 2.4 GHz frequency band of the wireless router.

To check the SSID set for the printer, print out the network setting information.

- Printing Network Settings

Note

- IJ Network Device Setup Utility allows you to diagnose and repair the network status.

  Select the link below to download IJ Network Device Setup Utility and install it.

  - Checking Printer Connection Status Using IJ Network Device Setup Utility

  See below for starting up IJ Network Device Setup Utility.

  - For Windows:
    - Starting Up IJ Network Device Setup Utility
  - For Mac OS:
    - Starting Up IJ Network Device Setup Utility

Check5 Make sure the printer is not placed too far away from the wireless router.

Place the wireless router and printer where there are no obstacles between them. Wireless communication between different rooms or floors is generally poor. Wireless communication can be impeded by building materials containing metal or concrete. If the printer cannot communicate with the computer over a wireless LAN due to a wall, place the printer and the computer in the same room.

In addition, if a device like a microwave oven that emits radio waves of the same frequency bandwidth as a wireless router is nearby, it may cause interference. Place the wireless router as far away from interference sources as possible.

Note

- Though an antenna is attached to most wireless routers, note that some of them have it inside.

Check6 Make sure wireless signal is strong. Monitor signal strength and move printer and wireless router as necessary.

Check the signal strength on the touch screen.

- Using the Operation Panel

Note

- IJ Network Device Setup Utility allows you to diagnose and repair the network status.

  Select the link below to download IJ Network Device Setup Utility and install it.

  - Checking Printer Connection Status Using IJ Network Device Setup Utility

  See below for starting up IJ Network Device Setup Utility.

  - For Windows:
    - Starting Up IJ Network Device Setup Utility
  - For Mac OS:
    - Starting Up IJ Network Device Setup Utility

Check7 Make sure the computer is connected to the wireless router.

For more on how to check the computer settings or connection status, see your computer instruction manual or contact its manufacturer.

Note

- If you use a smartphone or tablet, make sure the Wi-Fi is enabled on the device.

Check8 Make sure **Enable bidirectional support** is selected in the **Ports** sheet of the properties dialog box of the printer driver. (Windows)

If not, select it to enable bidirectional support.

Check9 Make sure security software's firewall is off.

If your security software's firewall is on, a message may appear warning you that Canon software is attempting to access the network. If this warning message appears, set security software to always allow access.

If you are using any programs that switch between network environments, check their settings. Some programs use a firewall by default.

Check10 If printer is connected to an AirPort Base Station via LAN, make sure you use alphanumeric characters for network identifier (SSID). (Mac OS)

If the problem is not resolved, redo setup.

- For Windows:

  Perform setup using the Setup CD-ROM or from the web page.

- For Mac OS:

  Perform setup from the web page.

Network Connection Problems

- Printer Suddenly Cannot Be Used
- Network Key Unknown
- Printer Cannot Be Used After Replacing Wireless Router or Changing Its Settings

Printer Suddenly Cannot Be Used

- Cannot Communicate with Printer Following Network Settings Change
- Cannot Communicate with Printer via Wireless LAN
- Cannot Communicate with Printer Using Wireless Direct
- Cannot Print or Scan from a Computer Connected to the Network

Q Cannot Communicate with Printer Following Network Settings Change

A

It may take a while for the computer to obtain an IP address, or you may need to restart your computer.

Make sure the computer has obtained a valid IP address, and try again to find the printer.

Q Cannot Communicate with Printer via Wireless LAN

A

Check1 Check the power status of printer, network devices (e.g. wireless router), and smartphone/tablet.

Turn on the printer or devices.

If the power is already turned on, turn it off and on again.

It may be necessary to resolve wireless router problems (e.g. update interval of a key, problems of DHCP update interval, energy saving mode, etc.) or to update the wireless router firmware.

For details, contact the manufacturer of your wireless router.

Check2 Can you view any web pages on your computer?

Make sure your computer is connected to the wireless router properly.

For more on checking computer settings or connection status, see the instruction manual supplied with the wireless router or contact the manufacturer.

Check3 Is the printer connected to the wireless router?

Use the icon on the touch screen to check the connection status between the printer and wireless router. If the icon is not displayed, wireless LAN is disabled. Turn on wireless communication on the printer.

Check4 Make sure the printer and wireless router network settings match.

Make sure the network settings of the printer (e.g. wireless router name, SSID, network key, etc.) are identical with those of the wireless router.

To check the settings of the wireless router, refer to the instruction manual provided with it or contact its manufacturer.

To check the current network settings of the printer, print out the network setting information.

- Printing Network Settings

Note

- IJ Network Device Setup Utility allows you to diagnose and repair the network status.

  Select the link below to download IJ Network Device Setup Utility and install it.

  - Checking Printer Connection Status Using IJ Network Device Setup Utility

  See below for starting up IJ Network Device Setup Utility.

  - For Windows:
    - Starting Up IJ Network Device Setup Utility
  - For Mac OS:
    - Starting Up IJ Network Device Setup Utility

Check5 Make sure the printer is not placed too far away from the wireless router.

Place the wireless router and printer where there are no obstacles between them. Wireless communication between different rooms or floors is generally poor. Wireless communication can be impeded by building materials containing metal or concrete. If the printer cannot communicate with the computer over a wireless LAN due to a wall, place the printer and the computer in the same room.

In addition, if a device like a microwave oven that emits radio waves of the same frequency bandwidth as a wireless router is nearby, it may cause interference. Place the wireless router as far away from interference sources as possible.

Note

- Though an antenna is attached to most wireless routers, note that some of them have it inside.

Check6 Make sure wireless signal is strong. Monitor signal status and move printer and wireless router as necessary.

Check the signal strength on the touch screen.

- Using the Operation Panel

Note

- IJ Network Device Setup Utility allows you to diagnose and repair the network status.

  Select the link below to download IJ Network Device Setup Utility and install it.

  - Checking Printer Connection Status Using IJ Network Device Setup Utility

  See below for starting up IJ Network Device Setup Utility.

  - For Windows:
    - Starting Up IJ Network Device Setup Utility
  - For Mac OS:
    - Starting Up IJ Network Device Setup Utility

Check7 Make sure you are using a valid channel.

Usable wireless channels may be limited depending on wireless network device used by your computer. See the instruction manual provided with your computer or wireless network device to check usable wireless channels.

Check8 Make sure channel set on wireless router is a usable channel as confirmed in Check 7.

If it is not, change the channel set on the wireless router.

Check9 Make sure security software's firewall is off.

If your security software's firewall is on, a message may appear warning you that Canon software is attempting to access the network. If this warning message appears, set security software to always allow access.

If you are using any programs that switch between network environments, check their settings. Some programs use a firewall by default.

Check10 If printer is connected to an AirPort Base Station via LAN, make sure you use alphanumeric characters for network identifier (SSID). (Mac OS)

If the problem is not resolved, redo setup.

- For Windows:

  Perform setup using the Setup CD-ROM or from the web page.

- For Mac OS:

  Perform setup from the web page.

- **Positioning:**

  Make sure there are no obstacles between the wireless router and the printer.

Q Cannot Communicate with Printer Using Wireless Direct

A

Check1 Check the power status of printer and other devices (smartphone or tablet).

Turn on the printer or devices.

If the power is already turned on, turn it off and on again.

Check2 Is the icon displayed on the touch screen?

If not, Wireless Direct is disabled. Turn on Wireless Direct.

Check3 Check the settings of your device (smartphone/tablet).

Make sure wireless LAN is enabled on your device.

For details, refer to your device's instruction manual.

Check4 Make sure printer is selected as connection for device (e.g. smartphone or tablet).

Select the identifier for Wireless Direct (SSID) specified for the printer as the connection destination for devices.

Check the destination on your device.

For details, refer to your device's instruction manual or visit the manufacturer's website.

To check the identifier for wireless direct (SSID) specified for the printer, display it using the operation panel of the printer or print out the network setting information of the printer.

- Display on the touch screen.

  LAN settings

- Print the network settings.

  Printing Network Settings

Check5 Have you entered the proper password specified for the Wireless Direct?

To check the password specified for the printer, display it using the operation panel of the printer or print out the network setting information of the printer.

- Display on the touch screen.

  LAN settings

- Print the network settings.

  Printing Network Settings

Check6 Make sure the printer is not placed too far away from the device.

Place the device and printer where there are no obstacles between them. Wireless communication between different rooms or floors is generally poor. Wireless communication can be impeded by building materials containing metal or concrete. If the printer cannot communicate with the computer over a wireless LAN due to a wall, place the printer and the computer in the same room.

In addition, if a device like a microwave oven that emits radio waves of the same frequency bandwidth as a wireless router is nearby, it may cause interference. Place the wireless router as far away from interference sources as possible.

Place devices a suitable distance from the printer.

Check7 Make sure 5 devices are already connected.

Wireless Direct does not allow more than 5 devices to be connected.

Q Cannot Print or Scan from a Computer Connected to the Network

A

Check1 Make sure the computer is connected to the wireless router.

For more on how to check the computer settings or connection status, see your computer instruction manual or contact its manufacturer.

Check2 If MP Drivers are not installed, install them. (Windows)

Install the MP Drivers using the Setup CD-ROM or install them from the Canon website.

Check3 Make sure wireless router does not restrict which computers can access it.

For more on connecting to and setting up your wireless router, see the wireless router instruction manual or contact its manufacturer.

Note

- To check the MAC address or IP address of your computer, see Checking Computer IP Address or MAC Address.

Network Key Unknown

- WPA/WPA2 or WEP Key Set for Wireless Router Unknown, Cannot Connect
- Setting an Encryption Key

Q WPA/WPA2 or WEP Key Set for Wireless Router Unknown, Cannot Connect

A

For more on setting up a wireless router, see the instruction manual provided with the wireless router or contact its manufacturer. Make sure your computer can communicate with the wireless router.

Note

- IJ Network Device Setup Utility allows you to diagnose and repair the network status.

  Select the link below to download IJ Network Device Setup Utility and install it.

  - Checking Printer Connection Status Using IJ Network Device Setup Utility

  See below for starting up IJ Network Device Setup Utility.

  - For Windows:
    - Starting Up IJ Network Device Setup Utility
  - For Mac OS:
    - Starting Up IJ Network Device Setup Utility

Q Setting an Encryption Key

A

For more on setting up a wireless router, see the instruction manual provided with the wireless router or contact its manufacturer. Make sure your computer can communicate with the wireless router.

Note

- IJ Network Device Setup Utility allows you to diagnose and repair the network status.

  Select the link below to download IJ Network Device Setup Utility and install it.

  - Checking Printer Connection Status Using IJ Network Device Setup Utility

  See below for starting up IJ Network Device Setup Utility.

  - For Windows:
    - Starting Up IJ Network Device Setup Utility
  - For Mac OS:
    - Starting Up IJ Network Device Setup Utility

Selecting WPA, WPA2, or WPA/WPA2 is recommended for security reason. If your wireless router is compatible with WPA/WPA2, you can also use WPA2 or WPA.

- **Using WPA/WPA2**

  The authentication method, passphrase, and dynamic encryption type must be the same for the wireless router, the printer, and your computer.

  Enter the passphrase configured on the wireless router (a sequence of between 8 and 63 alphanumeric characters, or a 64-character hexadecimal number).

  Either TKIP (basic encryption) or AES (secure encryption) is selected automatically as the dynamic encryption method.

  For details, see If WPA/WPA2 Details Screen Appears.

  Note

  - This printer supports WPA/WPA2-PSK (WPA/WPA2-Personal) and WPA2-PSK (WPA2-Personal).

- **Using WEP**

  The key length, key format, key to use (one of 1 to 4), and authentication method must be the same for the wireless router, the printer, and your computer.

  To communicate with a wireless router that uses automatically generated WEP keys, you must set the printer to use the key generated by the wireless router, entering it in hexadecimal format.

  - For Windows:

    When the **WEP Details** screen appears after you click **Search...** on the **Network Settings (Wireless LAN)** screen in IJ Network Device Setup Utility, follow the on-screen instructions to set the WEP key length, format, and the number.

    For details, see If WEP Details Screen Appears.

  Note

  - If the printer is connected to an AirPort Base Station via LAN:

    If the printer is connected to an AirPort Base Station via a LAN, check the settings in **Wireless Security** of **AirPort Utility**.

    - Select **64 bit** if **WEP 40 bit** is selected for key length in AirPort Base Station.
    - Select **1** for **Key ID**. Otherwise, computer will not be able to communicate with printer via the wireless router.

Printer Cannot Be Used After Replacing Wireless Router or Changing Its Settings

When you replace a wireless router, redo the network setup for the printer.

- For Windows:

  Perform setup using the Setup CD-ROM or from the web page.

- For Mac OS:

  Perform setup from the web page.

Note

- IJ Network Device Setup Utility allows you to diagnose and repair the network status.

  Select the link below to download IJ Network Device Setup Utility and install it.

  Checking Printer Connection Status Using IJ Network Device Setup Utility

  See below for starting up IJ Network Device Setup Utility.

  - For Windows:

    Starting Up IJ Network Device Setup Utility

  - For Mac OS:

    Starting Up IJ Network Device Setup Utility

If this does not solve the problem, see below.

Cannot Communicate with Printer After Enabling MAC/IP Address Filtering or Encryption Key on Wireless Router

With Encryption On, Cannot Communicate with Printer After Changing Encryption Type at Wireless Router

Cannot Communicate with Printer After Enabling MAC/IP Address Filtering or Encryption Key on Wireless Router

Check1 Check wireless router setting.

To check the wireless router setting, see the instruction manual provided with the wireless router or contact its manufacturer. Make sure the computer and the wireless router can communicate with each other under this setting.

Check2 If filtering MAC addresses or IP addresses at wireless router, check that MAC addresses or IP addresses for computer, network device, and printer are registered.

Check3 If using WPA/WPA2 or WEP key, make sure encryption key for computer, network device, and printer matches key set for wireless router.

Not only the WEP key itself, but also the key length, key format, the key ID to use, and the authentication method must be the same for the printer, the wireless router, and the computer.

For details, see Setting an Encryption Key.

Q With Encryption On, Cannot Communicate with Printer After Changing Encryption Type at Wireless Router

A

If you change the encryption type for the printer and it subsequently cannot communicate with the computer, make sure the encryption type for the computer and the wireless router matches the type set for the printer.

- Cannot Communicate with Printer After Enabling MAC/IP Address Filtering or Encryption Key on Wireless Router

Other Network Problems

- Checking Network Information
- Restoring to Factory Defaults

Checking Network Information

- Checking Printer IP Address or MAC Address
- Checking Computer IP Address or MAC Address
- Checking Communication Between the Computer, the Printer, and the Wireless Router
- Checking Network Setting Information

Q Checking Printer IP Address or MAC Address

A

To check the printer's IP Address or MAC address, print out the network settings information or use the operation panel to display it.

- Display on the touch screen.
  - LAN settings
- Print the network settings.
  - Printing Network Settings

For Windows, you can check the network setting information on the computer screen.

- Canon IJ Network Device Setup Utility Screen

You can display the printer's MAC address on the touch screen.

- System information

Q Checking Computer IP Address or MAC Address

A

To check the IP Address or MAC address of your computer, follow the instructions below.

- For Windows:
  1. Select **Command Prompt** as shown below.

     In Windows 10, right-click **Start** button and select **Command Prompt**.

     In Windows 8.1, select **Command Prompt** from the **Start** screen. If **Command Prompt** is not displayed on the **Start** screen, select the **Search** charm and search for "**Command Prompt**".

     In Windows 7, click **Start** > **All Programs** > **Accessories** > **Command Prompt**.
  2. Enter "ipconfig/all" and press **Enter**.

     The IP address and MAC address of your computer appear. If your computer is not connected to a network, the IP address does not appear.
- For Mac OS:
  1. Select **System Preferences** from Apple menu, and then click **Network**.
  2. Make sure network interface used by computer is selected, and then click **Advanced**.

Make sure **Wi-Fi** is selected as network interface.

3. Check the IP address or MAC address.

   Click **TCP/IP** to check the IP address.

   Click **Hardware** to check the MAC address.

Q Checking Communication Between the Computer, the Printer, and the Wireless Router

A

Perform a ping test to check if communication is taking place.

- For Windows:
  1. Select **Command Prompt** as shown below.

     In Windows 10, right-click **Start** button and select **Command Prompt**.

     In Windows 8.1, select **Command Prompt** from the **Start** screen. If **Command Prompt** is not displayed on the **Start** screen, select the **Search** charm and search for "**Command Prompt**".

     In Windows 7, click **Start** > **All Programs** > **Accessories** > **Command Prompt**.

  2. Type the ping command and press **Enter**.

     The ping command is as follows: ping XXX.XXX.XXX.XXX

     "XXX.XXX.XXX.XXX" is the IP address of the target device.

     If communication is taking place, a message like the one shown below appears.

     Reply from XXX.XXX.XXX.XXX: bytes=32 time=10ms TTL=255

     If **Request timed out** appears, communication is not taking place.

- For Mac OS:
  1. Start **Network Utility** as shown below.

     Select **Computer** from **Go** menu of Finder, double-click **Macintosh HD** > **System** > **Library** > **CoreServices** > **Applications** > **Network Utility**.

  2. Click **Ping**.
  3. Make sure **Send only XX pings** (XX are numbers) is selected.
  4. Enter IP address of target printer or target wireless router in **Enter the network address to ping**.
  5. Click **Ping**.

     "XXX.XXX.XXX.XXX" is the IP address of the target device.

     A message such as the following appears.

     64 bytes from XXX.XXX.XXX.XXX: icmp_seq=0 ttl=64 time=3.394 ms

     64 bytes from XXX.XXX.XXX.XXX: icmp_seq=1 ttl=64 time=1.786 ms

     64 bytes from XXX.XXX.XXX.XXX: icmp_seq=2 ttl=64 time=1.739 ms

     --- XXX.XXX.XXX.XXX ping statistics ---

3 packets transmitted, 3 packets received, 0% packet loss

If packet loss is 100%, communication is not taking place. Otherwise, computer is communicating with target device.

Q Checking Network Setting Information

A

To check the printer's network settings information, print out the network settings information or use the operation panel to display it.

- Display on the touch screen.

  LAN settings

- Print the network settings.

  Printing Network Settings

Restoring to Factory Defaults

Important

- For Windows:

  Initialization erases all network settings on the printer, making printing or scanning operation from a computer over a network impossible. To use the printer over a network again after restoring it to the factory defaults, redo setup using the Setup CD-ROM or from the web page.

- For Mac OS:

  Initialization erases all network settings on the printer, making printing or scanning operation from a computer over a network impossible. To use the printer over a network again after restoring it to the factory defaults, redo setup from the web page.

Initialize the network setting using the printer's operation panel.

- Reset setting

Printing Problems

- Printing Does Not Start
- No Ink Comes Out
- Paper Does Not Feed Properly/"No Paper" Error
- Print Results Are Unsatisfactory

Q

Printing Does Not Start

A

Check1 Make sure printer is securely plugged in and press **ON** button to turn it on.

The **ON** lamp flashes while the printer is initializing. Wait until the **ON** lamp stops flashing and remains lit.

Note

- If you are printing large data such as photos or other graphics, printing may take longer to start. The **ON** lamp flashes while the computer is processing data and sending it to the printer. Wait until printing starts.

Check2 Make sure printer is properly connected to computer.

When the printer is connected to your computer with a USB cable, check the following:

- If you are using a relay device such as a USB hub, disconnect it, connect the printer directly to the computer, and retry the printing. If printing starts normally, there is a problem with the relay device. Contact the vendor of the relay device.
- There could also be a problem with the USB cable. Replace the USB cable and retry the printing.

If you use the printer over a LAN, make sure the printer is correctly set up for network use.

Note

- IJ Network Device Setup Utility allows you to diagnose and repair the network status. Download it from the web page.
  - For Windows
  - For Mac OS

Check3 Make sure paper settings match information set for rear tray or cassette.

If the paper settings do not match the information set for the rear tray or the cassette, an error message appears on the touch screen. Follow the instructions on the touch screen to solve the problem.

Note

- You can select whether the message which prevents misprinting is displayed.
  - To change the message view setting when printing or copying using the printer's operation panel:
    - Device user settings
  - To change the message view setting when printing using the printer driver:
    - Changing the Printer Operation Mode (Windows)
    - Changing the Printer Operation Mode (Mac OS)

Check4 If printing from a computer, delete unnecessary print jobs.

- For Windows:

  Deleting the Undesired Print Job

- For Mac OS:

  Deleting the Undesired Print Job

Check5 Is your printer's printer driver is selected when printing?

The printer will not print properly if you are using a printer driver for a different printer.

- For Windows:

  Make sure "Canon XXX series" (where "XXX" is your printer's name) is selected in the Print dialog box.

  Note

  - To make the printer the one selected by default, select **Set as Default Printer**.

- For Mac OS:

  Make sure your printer's name is selected in **Printer** in the Print dialog.

  Note

  - To make the printer the one selected by default, select the printer for **Default printer**.

Check6 Is print data extremely large? (Windows)

Click **Print Options** on **Page Setup** sheet of the printer driver. Then set **Prevention of Print Data Loss** to **On** in the dialog that appears.

* This may reduce print quality.

Check7 If printing from your computer, restart computer.

No Ink Comes Out

Check1 Has ink run out?

Open the scanning unit / cover and check the ink status on the touch screen.

Checking Ink Status on the Touch Screen

Check2 Is orange tape or protective film still on ink tank?

Make sure all the protective film is peeled off to expose the Y-shaped air hole, as shown below (A).

If the orange tape remains on the ink tank (B), peel it off.

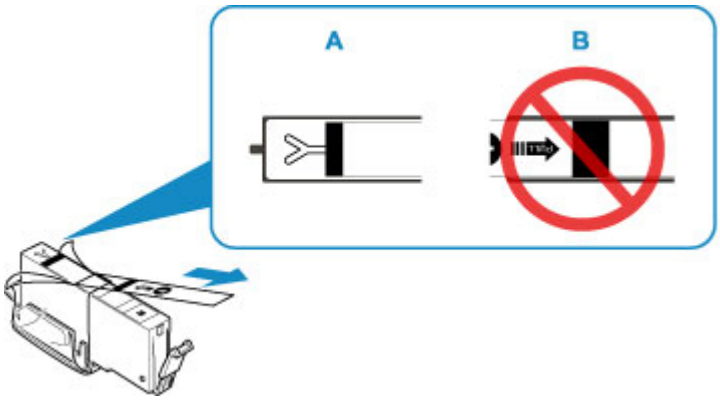

Check3 Are the print head nozzles clogged?

Print the nozzle check pattern to determine whether the ink ejects properly from the print head nozzles.

For details on printing the nozzle check pattern, print head cleaning, and print head deep cleaning, see If Printing Is Faint or Uneven.

- If nozzle check pattern is not printed correctly:

  Check if the ink tank for the problem color is empty.

  If the ink tank is not empty, perform print head cleaning and try printing the nozzle check pattern again.

- If problem is not resolved after performing print head cleaning twice:

  Perform print head deep cleaning.

  If the problem is not resolved after performing print head deep cleaning, turn off the printer and perform print head deep cleaning again 24 hours later.

- If problem is not resolved after performing print head deep cleaning twice:

  If print head deep cleaning does not resolve the problem, the print head may be damaged. Contact your nearest Canon service center to request a repair.

Paper Does Not Feed Properly/"No Paper" Error

A

Check1 Make sure paper is loaded.

- Loading Paper

Check2 When loading paper, consider the following.

- When loading two or more sheets of paper, align the edges of the sheets before loading the paper.
- When loading two or more sheets of paper, make sure the paper stack does not exceed the paper load limit.

  However, paper may not feed correctly at the maximum capacity, depending on the type of paper or environmental conditions (very high or low temperature and humidity). In such cases, reduce the amount of paper you load at a time to less than half of the paper load limit.
- Always load the paper in portrait orientation, regardless of the printing orientation.
- When you load the paper on the rear tray, place the print side facing UP and align the right and left paper guides with the paper stack.

  - Loading Paper
- In the cassette, be sure to load only plain paper.
- When you load the paper on the cassette, place the print side facing DOWN and align the right/left/front paper guides with the paper stack.

  - Loading Paper

Check3 Is paper too thick or curled?

- Unsupported Media Types

Check4 When loading postcards or envelopes, consider the following:

- If a postcard is curled, it may not feed properly even though the paper stack does not exceed the paper load limit.

  Load Japanese postcards with their postcode column downward on the rear tray.
- When printing on envelopes, see Loading Envelopes, and prepare the envelopes before printing.

  Once you have prepared the envelopes, load them in portrait orientation. If the envelopes are placed in landscape orientation, they will not feed properly.

Check5 Make sure media type and paper size settings match with loaded paper.

Check6 Make sure that there are not any foreign objects in the rear tray.

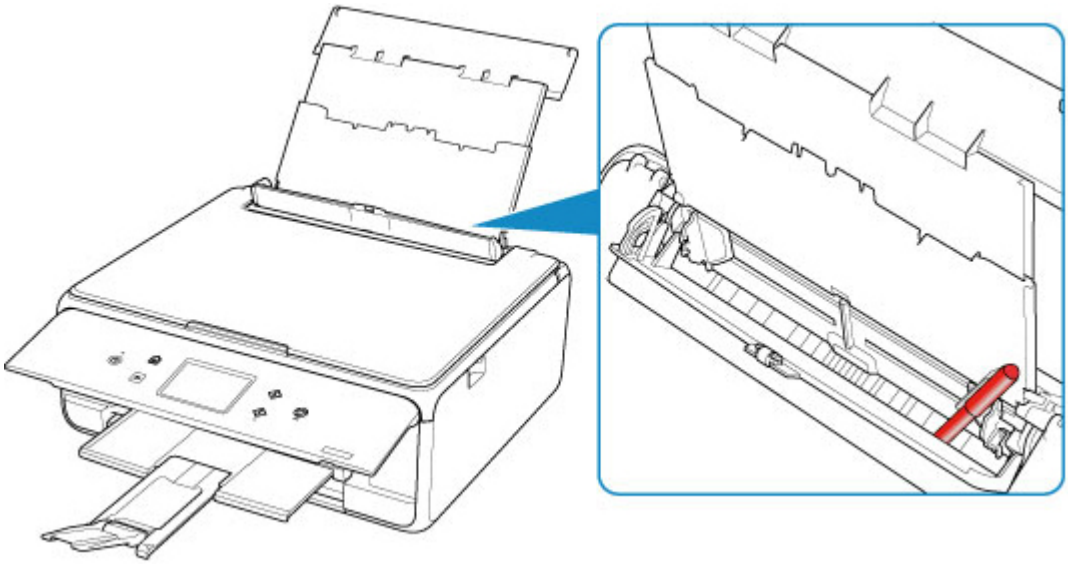

If the paper tears in the rear tray, see List of Support Code for Error (Paper Jams) to remove it.

If there are any foreign objects in the rear tray, be sure to turn off the printer, unplug it from the power supply, then remove the foreign object.

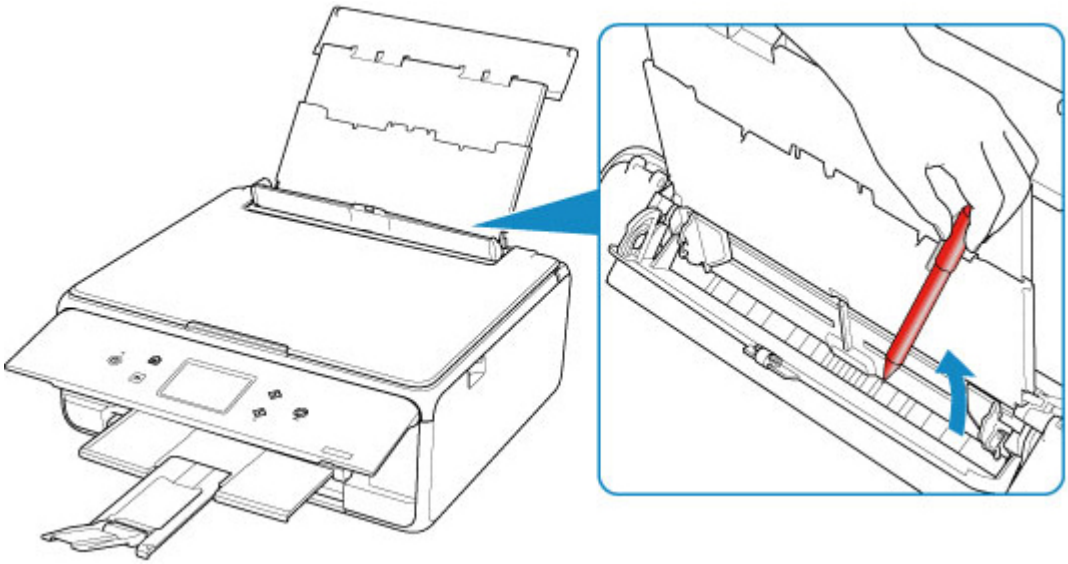

Note

- If the feed slot cover is opened, close it slowly.

Check7 Clean paper feed roller.

Cleaning Paper Feed Rollers

Note

- Cleaning the paper feed roller abrades it, so do this only when necessary.

Check8 If two or more sheets of paper feed from cassette at once, clean inside of cassette.

Cleaning Cassette Pads

Check9 Are transport unit cover and rear cover attached properly?

See Rear View for the positions of the transport unit cover and the rear cover.

If the measures above do not solve the problem, contact your nearest Canon service center to request a repair.

Print Results Are Unsatisfactory

If the print results are unsatisfactory due to white streaks, misaligned lines, or uneven colors, check the paper and print quality settings first.

Check1 Do page size and media type settings match size and type of loaded paper?

If these settings do not match, it is not possible to obtain the proper result.

If you are printing a photograph or an illustration, an incorrect paper type setting may reduce the quality of the printout color.

Also, if you print with an incorrect paper type setting, the printed surface may be scratched.

In borderless printing, uneven coloring may occur depending on the combination of the paper type setting and the loaded paper.

The method for checking the paper and print quality settings differs depending on what you are using your printer for.

Copying	Check the settings using the operation panel. Setting Items for Copying
Copying a photo	Check the settings using the operation panel. Copying Photos
Printing from a PictBridge (Wireless LAN) compliant device	Check the settings on your PictBridge (Wireless LAN) compliant device. PictBridge (Wireless LAN) Print Settings Check the settings using the operation panel. PictBridge print settings
Printing from your computer (Windows)	Check the settings using the printer driver. Basic Printing Setup

Check2 Make sure appropriate print quality is selected (see table above).

Select a print quality suited to the paper and to what you are printing. If you notice blurs or uneven colors, increase the print quality setting and retry the printing.

Note

- When printing from a PictBridge (Wireless LAN) compliant device, set the print quality setting using the operation panel.

  This setting cannot be made on the PictBridge (Wireless LAN) compliant device.

Check3 If problem is not resolved, check other causes.

See also the sections below:

- Paper Is Blank/Printing Is Blurry/Colors Are Wrong/White Streaks Appear
- Lines Are Misaligned
- Paper Is Smudged / Printed Surface Is Scratched
- Cannot Complete Printing
- Vertical Line Next to Image
- Part of Page Is Not Printed (Windows)
- Lines Incomplete or Missing (Windows)
- Images Incomplete or Missing (Windows)
- Ink Blots / Paper Curl
- Back of Paper Is Smudged
- Uneven or Streaked Colors

Q

Paper Is Blank/Printing Is Blurry/Colors Are Wrong/White Streaks Appear

Printing Is Blurry

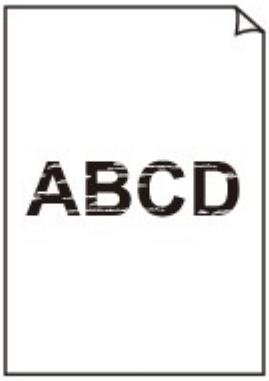

Colors Are Wrong

White Streaks Appear

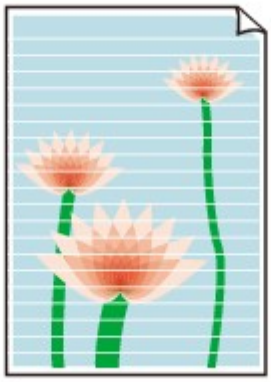

A

Check1 Check paper and print quality settings.

- Print Results Are Unsatisfactory

Check2 Check status of ink tanks. Replace ink tank if ink has run out.

- Replacing Ink Tanks

Check3 Is orange tape or protective film still on ink tank?

Make sure all the protective film is peeled off to expose the Y-shaped air hole, as shown below (A).

If the orange tape remains on the ink tank (B), peel it off.

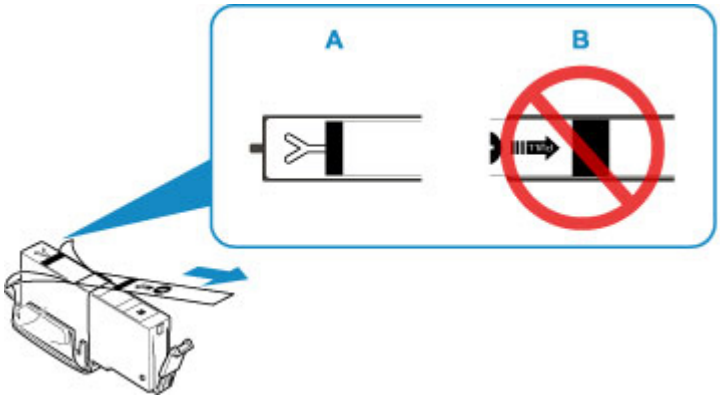

Check4 Are the print head nozzles clogged?

Print the nozzle check pattern to determine whether the ink ejects properly from the print head nozzles.

For details on printing the nozzle check pattern, print head cleaning, and print head deep cleaning, see If Printing Is Faint or Uneven.

- If nozzle check pattern is not printed correctly:

  Check if the ink tank for the problem color is empty.

  If the ink tank is not empty, perform print head cleaning and try printing the nozzle check pattern again.

- If problem is not resolved after performing print head cleaning twice:

Perform print head deep cleaning.

If the problem is not resolved after performing print head deep cleaning, turn off the printer and perform print head deep cleaning again 24 hours later.

- If problem is not resolved after performing print head deep cleaning twice:

  If print head deep cleaning does not resolve the problem, the print head may be damaged. Contact your nearest Canon service center to request a repair.

Check5 When using paper with one printable surface, check the correct printable side of the paper.

Printing on the wrong side of such paper may cause unclear prints or prints with reduced quality.

When you load paper on the rear tray, load paper with the printable side facing up. When you load paper in the cassette, load paper with the printable side facing down.

Refer to the instruction manual supplied with the paper for detailed information on the printable side.

- **When copying, see also the sections below:**

Check6 Is platen glass dirty?

Clean the platen glass.

Cleaning the Platen Glass and Document Cover

Check7 Make sure original is properly loaded on platen glass.

Loading Originals

Check8 Is original loaded with side to be copied facing down on platen glass?

Check9 Did you copy a printout done by this printer?

If you use a printout done by this printer as the original, print quality may be reduced depending on the condition of the original.

Print from the printer directly, or reprint from the computer if you can reprint from it.

Lines Are Misaligned

Check1 Check paper and print quality settings.

- Print Results Are Unsatisfactory

Check2 Perform print head alignment.

If printed lines are misaligned or print results are otherwise unsatisfactory, adjust the print head position.

- Aligning the Print Head

Note

- If the problem is not resolved after performing the print head alignment, perform print head alignment manually from your computer.
  - For Windows:
    - Adjusting Print Head Position
  - For Mac OS:
    - Adjusting Print Head Position

Check3 Increase print quality and try printing again.

Increasing the print quality using the printer driver may improve the print result.

Q

Paper Is Smudged / Printed Surface Is Scratched

Paper Is Smudged

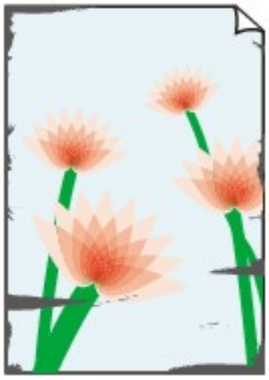

Smudged Edges

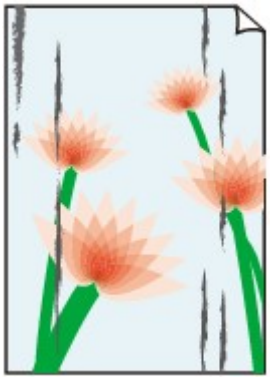

Smudged Surface

Printed Surface Is Scratched

A

Check1 Check paper and print quality settings.

- Print Results Are Unsatisfactory

Check2 Check paper type.

Make sure you are using the right paper for what you are printing.

- Supported Media Types

Check3 Correct curl before loading paper.

We recommend putting unused paper back into the package and storing it flat.

- **Plain Paper**

  Turn the paper over and reload it to print on the other side.

  Leaving the paper loaded on the rear tray for a long time may cause the paper to curl. In this case, load the paper with the other side facing up. It may resolve the problem.

- **Other Paper**

  If the paper corners curl more than 0.1 inch / 3 mm (A) in height, the paper may smudge or may not feed properly. Follow the instructions below to correct the paper curl.

1. Roll up paper in opposite direction to paper curl as shown below.

2. Check that paper is now flat.

   We recommend printing curl-corrected paper one sheet at a time.

Note

- Depending on paper type, the paper may smudge or may not feed properly even if it is not curled inward. Follow the instructions below to curl the paper outward up to 0.1 inch / 3 mm (B) in height before printing. This may improve the print result.

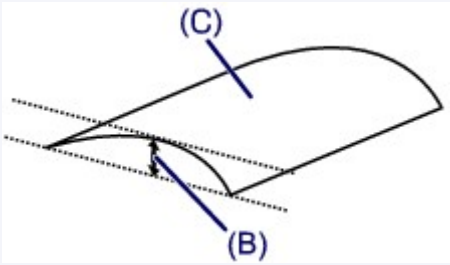

(C) Print side

We recommend feeding paper that has been curled outward one sheet at a time.

Check4 Set printer to prevent paper abrasion.

Adjusting the setting to prevent paper abrasion will widen the clearance between the print head and the paper. If you notice abrasion even with the media type set correctly to match the paper, set the printer to prevent paper abrasion using the operation panel or the computer.

This may reduce the print speed.

* Once you have finished printing, undo this setting. Otherwise, it will apply to subsequent print jobs.

- From operation panel

  Press the **HOME** button, select (**Setup**) icon, **Settings**, **Device settings**, and **Print settings**, and then set **Prevent paper abrasion** to **ON**.

  Changing Settings from Operation Panel

- From computer
  - For Windows:
    1. Make sure printer is turned on.
    2. Open printer driver setup window.

Opening Printer Driver's Setup Screen

3. Click **Maintenance** tab and **Custom Settings**.
4. Select **Prevent paper abrasion** check box and click **OK**.

- For Mac OS:

  Adjust the setting to prevent paper abrasion from Remote UI.

  Opening Remote UI for Maintenance

Check5 If intensity is set high, reduce intensity setting and try printing again.

If you are printing with a high intensity setting on plain paper, the paper may absorb too much ink and become wavy, causing paper abrasion.

- Printing from your computer (Windows)

  Check the intensity setting in the printer driver.

  Adjusting Intensity

- Copying

  Setting Items for Copying

Check6 Do not print outside recommended printing area.

If you print outside the recommended printing area of your paper, ink may stain the lower edge of the paper.

Resize the document using application software.

Print Area

Check7 Is platen glass dirty?

Clean the platen glass.

Cleaning the Platen Glass and Document Cover

Check8 Is paper feed roller dirty?

Clean paper feed roller.

Cleaning the Paper Feed Rollers

Note

- Cleaning the paper feed roller abrades it, so do this only when necessary.

Check9 Is inside of printer dirty?

During duplex printing, ink may stain the inside of the printer, smudging the printout.

Perform bottom plate cleaning to clean inside of printer.

Cleaning Inside the Printer (Bottom Plate Cleaning)

Note

- To prevent staining inside the printer, be sure to set the correct paper size.

Check10 Set longer ink drying time.

This allows the printed surface to dry, preventing smudges and scratches.

- For Windows:
  1. Make sure printer is turned on.
  2. Open printer driver setup window.

     Opening Printer Driver's Setup Screen
  3. Click **Maintenance** tab and **Custom Settings**.
  4. Drag **Ink Drying Wait Time** slide bar to set the wait time and click **OK**.
  5. Check message and click **OK**.
- For Mac OS:

  Set the waiting time using Remote UI.

  Changing the Printer Operation Mode

Q

Vertical Line Next to Image

A

Check Is loaded paper size correct?

If the loaded paper is larger than the size you specified, a vertical line may appear in the margin.

Set the paper size to match the loaded paper.

Print Results Are Unsatisfactory

Note

- The direction of the vertical line pattern may vary depending on the image data or the print setting.
- This printer performs automatic cleaning when necessary to keep printouts clean. A small amount of ink is ejected for cleaning.

  Although the ink is normally ejected onto the ink absorber at the outer edge of the paper, it may get onto the paper if the loaded paper is larger than the set size.

Scanning Problems (Mac OS)

- Scanning Problems

Scanning Problems

- Scanner Does Not Work
- Scanner Driver Does Not Start

Scanner Does Not Work

Check 1 Make sure that your scanner or printer is turned on.

Check 2 With network connection, check the connection status and reconnect as needed.

Check 3 With USB connection, connect the USB cable to a different USB port on the computer.

Check 4 If the USB cable is connected to a USB hub, remove it from the USB hub and connect it to a USB port on the computer.

Check 5 Restart the computer.

Scanner Driver Does Not Start

Check 1 Make sure the application software supports AirPrint.

Check 2 Select your scanner or printer on the application's menu.

Note

- The operation may differ depending on the application.

Check 3 Scan and save images with IJ Scan Utility Lite and open the files in your application.

Mechanical Problems

- Power Does Not Come On
- Power Shuts Off By Itself
- USB Connection Problems
- Cannot Communicate with Printer via USB
- Touch Screen Shows Wrong Language

Power Does Not Come On

Check1 Press **ON** button.

Check2 Make sure power plug is securely connected to printer, and then turn it back on.

Check3 Unplug printer, leave it for at least 2 minutes, and then plug it back in and turn it on again.

If this does not solve the problem, contact your nearest Canon service center to request a repair.

Power Shuts Off By Itself

Check If printer is set to turn off automatically after a certain time, disable this setting.

If you have set the printer to turn off automatically after a specified time, the power will shut off by itself once that time has elapsed.

- To disable the setting from the operation panel:
  1. Make sure printer is turned on.
  2. Select **Setup** on the HOME screen.
  3. Select **Settings**.
  4. Select **ECO**.
  5. Select **Energy saving settings**.
  6. Check on-screen instructions and select **Next**.
  7. Select **Auto power off**.
  8. Select **Never**.
  9. Select **OK**.

     The setting to shut off the power automatically is disabled.
- To disable the setting from the computer:

  For Windows, use Canon IJ Printer Assistant Tool or ScanGear (scanner driver) to disable the setting.

  Follow the procedure below to disable the setting using Canon IJ Printer Assistant Tool.
  1. Open Canon IJ Printer Assistant Tool.

     Maintenance tab Description
  2. Select printer you are using from pulldown menu and select **OK**.

     The menu screen appears.
  3. Select **Auto Power**.
  4. Select **Disable** for **Auto Power Off**.

     The setting to shut off the power automatically is disabled.

Note

- Refer to below to disable the setting from ScanGear (scanner driver).

  Scanner Tab

USB Connection Problems

Q Printing or Scanning Is Slow/Hi-Speed USB Connection Does Not Work/"This device can perform faster" Message Appears (Windows)

A

If your system environment does not support Hi-Speed USB, the printer operates at the slower speed of USB 1.1. In this case, the printer works properly but printing or scanning speed may slow down due to the communication speed.

Check Check following to make sure your system environment supports Hi-Speed USB connection.

- Does the USB port on your computer support Hi-Speed USB connection?
- Does the USB cable or the USB hub support Hi-Speed USB connection?

  Be sure to use a certified Hi-Speed USB cable. We recommend that the USB cable be no longer than 10 feet / 3 meters or so.
- Does the operating system of your computer support Hi-Speed USB connection?

  Install the latest update for your computer.
- Is the Hi-Speed USB driver working properly?

  If necessary, obtain and install the latest version of the Hi-Speed USB driver for your computer.

Important

- For more information, contact the manufacturer of your computer, USB cable, or USB hub.

Q

Cannot Communicate with Printer via USB

A

Check1 Make sure printer is turned on.

Check2 Connect USB cable properly.

As the illustration below, the USB port is at the back of the printer.

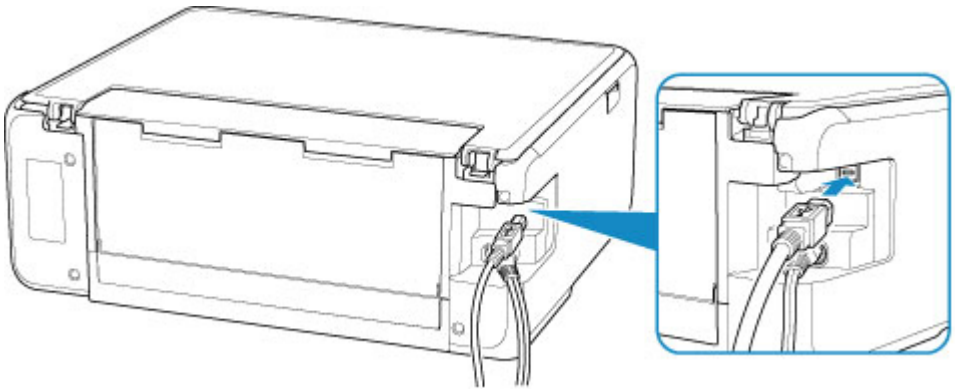

Important

- Connect the "Type-B" terminal to the printer with the notched side facing UP. For details, refer to the instruction manual supplied with the USB cable.

Check3 Make sure **Enable bidirectional support** is selected in the **Ports** sheet of the properties dialog box of the printer driver. (Windows)

If not, select it to enable bidirectional support.

Opening Printer Driver's Setup Screen

Installation and Download Problems

- Cannot Install MP Drivers (Windows)
- Updating MP Drivers in Network Environment (Windows)

Cannot Install MP Drivers (Windows)

- **If installation does not start when you insert Setup CD-ROM:**

  Follow the instructions below to start the installation.

  1. Make the following settings.
     - In Windows 10, click **Start** button > **File Explorer**, and then click **This PC** from list on left.
     - In Windows 8.1, select **Explorer** icon in **Taskbar** on **Desktop**, and then select **This PC** from list on left.
     - In Windows 7, click **Start**, and then click **Computer**.
  2. Double-click the CD-ROM icon in the window that appears.

     If the contents of the CD-ROM appear, double-click **MSETUP4.EXE**.

     If you cannot install the MP Drivers with the Setup CD-ROM, install them from the Canon website.

Note

- If the CD-ROM icon does not appear, try the following:
  - Remove the CD-ROM from your computer and reinsert it.
  - Restart your computer.

  If the icon still does not appear, try a different disc and see if it appears. If it does, there is a problem with the Setup CD-ROM. Contact your nearest Canon service center to request a repair.

- **If you cannot get past the Printer Connection screen:**

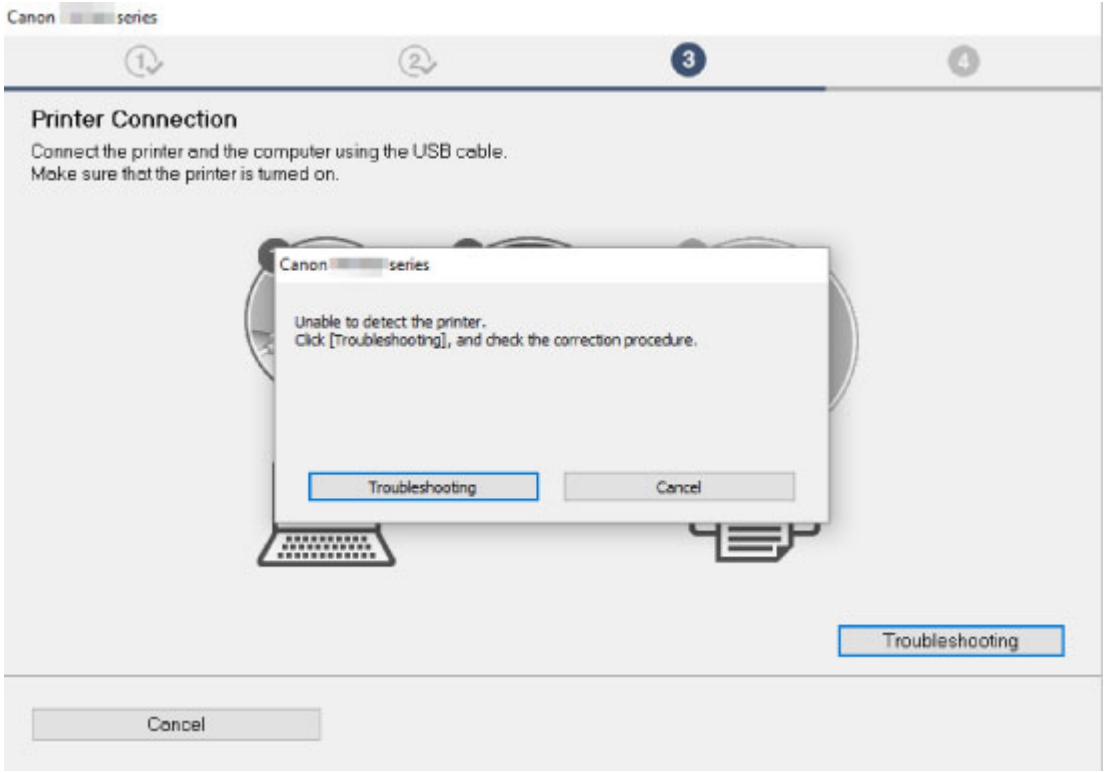

Cannot Proceed beyond Printer Connection Screen

- **Other cases:**

Reinstall the MP Drivers.

If the MP Drivers were not installed correctly, uninstall the MP Drivers, restart your computer, and then reinstall the MP Drivers.

Deleting the Unnecessary MP Drivers

Reinstall the MP Drivers with the Setup CD-ROM or install them from the Canon website.

Note

- If the installer was stopped due to a Windows error, Windows operation may be unstable, and you may not be able to install the drivers. Restart your computer and then reinstall the drivers.

Updating MP Drivers in Network Environment (Windows)

Download the latest MP Drivers.

Download the latest MP Drivers for your model on the download page of the Canon website.

Uninstall the existing MP Drivers and follow the installation instructions to install the latest MP Drivers that you downloaded. In the connection method selection screen, select **Use the printer with wireless LAN connection**. The printer is detected automatically in the network.

Make sure the printer was found, and install the MP Drivers following the on-screen instructions.

Note

- The network settings on the printer are not affected, so the printer can be used on the network without redoing settings.

Errors and Messages

- An Error Occurs
- Message (Support Code) Appears

An Error Occurs

If an error occurs in printing, for example if the paper runs out or jams, an error message appears on the computer screen and the touch screen.

When a Support Code and a message are displayed on the computer screen (Windows):

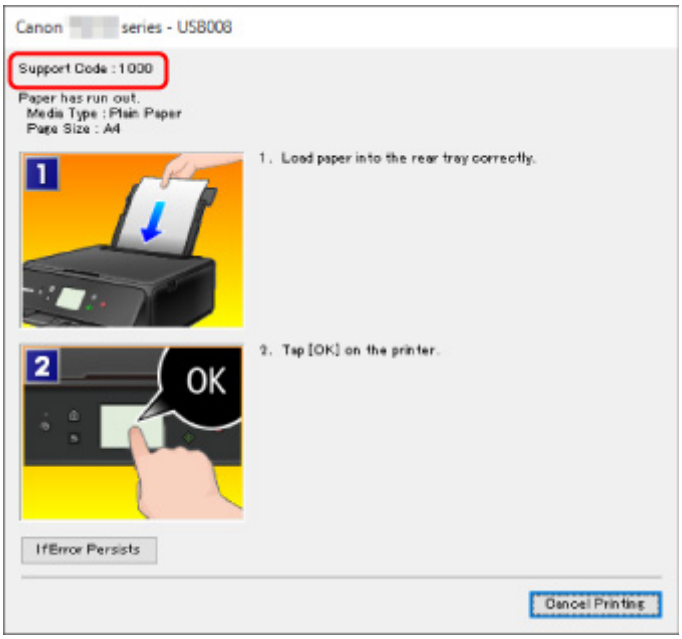

When a Support Code and a message are displayed on the touch screen:

A support code and action for the error appears on the touch screen.

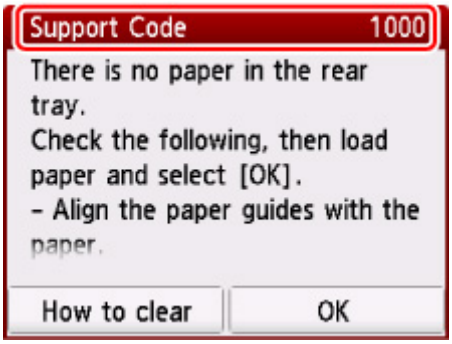

For details on how to resolve errors, see List of Support Code for Error.

Note

- For details on how to resolve errors without Support Codes, see Message (Support Code) Appears.

Message (Support Code) Appears

This section describes some of the errors and messages that may appear.

Note

- A support code (error number) is displayed on the computer for some errors. For details on errors that have support code, see List of Support Code for Error.

If a message appears on the touch screen, see below.

- Message Appears on Touch Screen

If a message appears on the computer, see below.

- Error Regarding Automatic Duplex Printing Is Displayed
- Error Regarding Power Cord Being Unplugged Is Displayed (Windows)
- Writing Error/Output Error/Communication Error (Windows)
- Other Error Messages (Windows)
- Inkjet Printer/Scanner/Fax Extended Survey Program Screen Is Displayed (Windows)
- Inkjet Printer/Scanner/Fax Extended Survey Program Icon Appears (Mac OS)

Q Message Appears on Touch Screen

A

Check the message and take an appropriate action.

- **Power was not turned off correctly the last time. Press the button when turning power off.**

  The printer may have been unplugged while the power was still on.

  Select **OK** on the touch screen.

  Note

  - See Unplugging the Printer to unplug the printer correctly.

- **Cannot connect to the server. Please wait a while and try again.**

  The printer cannot connect to the server due to a communication error.

  Select **OK** on the touch screen and try again after a while.

Q Error Regarding Automatic Duplex Printing Is Displayed

A

Check See Automatic Duplex Printing Problems and take the appropriate action.

Q Error Regarding Power Cord Being Unplugged Is Displayed (Windows)

A

The printer may have been unplugged while it was on.

Check the error message that appears on the computer and click **OK**.

The printer starts printing.

See Unplugging the Printer for unplugging the power cord.

Q Writing Error/Output Error/Communication Error (Windows)

A

Check1 If the **ON** lamp is off, make sure printer is plugged in and turn it on.

The **ON** lamp flashes while the printer is initializing. Wait until the **ON** lamp stops flashing and remains lit.

Check2 Make sure printer is properly connected to computer.

If you are using a USB cable, make sure it is securely connected to both the printer and the computer. When the USB cable is securely plugged in, check the following:

- If you are using a relay device such as a USB hub, disconnect it, connect the printer directly to the computer, and retry the printing. If printing starts normally, there is a problem with the relay device. Contact the vendor of the relay device.
- There could also be a problem with the USB cable. Replace the USB cable and retry the printing.

If you use the printer over a LAN, make sure the printer is correctly set up for network use.

Check3 Make sure MP Drivers are installed correctly.

Uninstall the MP Drivers following the procedure described in Deleting the Unnecessary MP Drivers and reinstall them from the Setup CD-ROM or the Canon website.

Check4 When printer is connected to your computer with a USB cable, check device status from your computer.

Follow the procedure below to check the device status.

1. Open the Device Manager on your computer as shown below.

   If **User Account Control** screen is displayed, follow the on-screen instructions.

   - In Windows 10, right-click **Start** button and select **Device Manager**.
   - In Windows 8.1, select **Control Panel** from **Settings** charm on **Desktop** > **Hardware and Sound** > **Device Manager**.
   - In Windows 7, click **Control Panel**, **Hardware and Sound**, and **Device Manager**.

2. Double-click **Universal Serial Bus controllers** and **USB Printing Support**.

   If **USB Printing Support Properties** screen does not appear, make sure the printer is correctly connected to the computer.

   Check2 Make sure printer is properly connected to computer.

3. Click **General** tab and check for a device problem.

   If a device error is shown, see Windows Help to resolve it.

Q Other Error Messages (Windows)

A

Check If an error message appears outside printer status monitor, check the following:

- **"Could not spool successfully due to insufficient disk space"**

  Delete any unnecessary files to increase the amount of free space on the disk.

- **"Could not spool successfully due to insufficient memory"**

  Close other applications to increase the available memory.

  If you still cannot print, restart your computer and retry the printing.

- **"Printer driver could not be found"**

  Uninstall the MP Drivers following the procedure described in Deleting the Unnecessary MP Drivers and reinstall them from the Setup CD-ROM or the Canon website.

- **"Could not print Application name** - File name"

  Try printing again once the current job is complete.

Q Inkjet Printer/Scanner/Fax Extended Survey Program Screen Is Displayed (Windows)

A

If the Inkjet Printer/Scanner/Fax Extended Survey Program is installed, a screen appears asking for permission to send the printer and application usage information every month for about ten years.

Read the information on the screen and follow the instructions below.

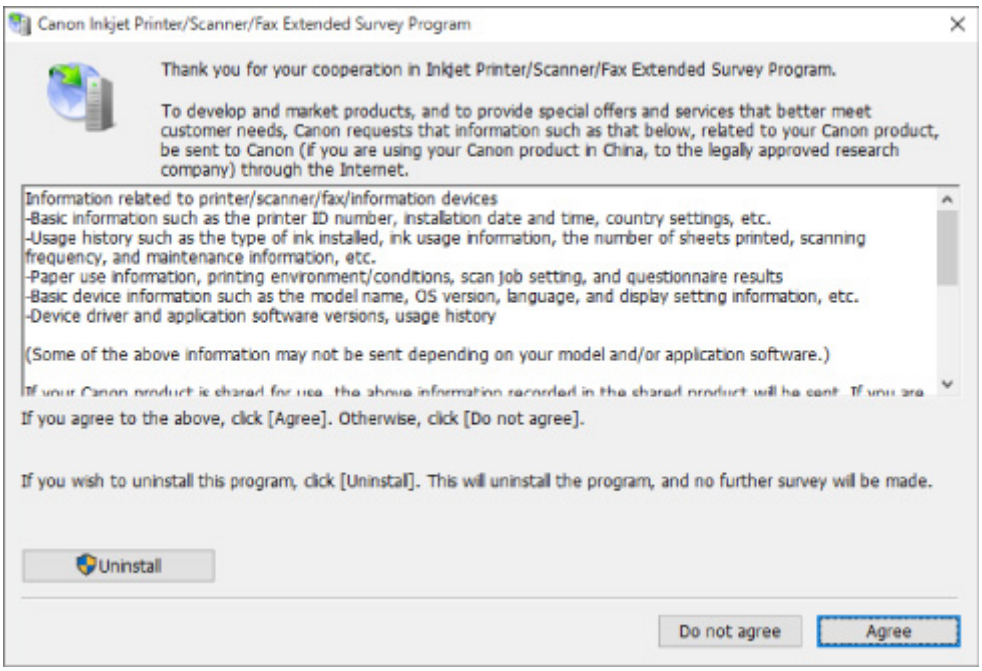

- **If you agree to participate in survey program:**

  Click **Agree** and follow the on-screen instructions. The printer usage information is sent via the Internet. Once you have completed the procedure, the information is subsequently sent automatically and the confirmation screen does not reappear.

  Note

  - When the information is being sent, a warning such as an Internet security message may appear. Make sure the program name is "IJPLMUI.exe" and allow it.
  - If you clear **Send automatically from the next time** check box, the information will not be sent automatically from next time and a confirmation screen will appear at the time of the next survey. To send the information automatically, see Changing confirmation screen setting:.

- **If you do not agree to participate in survey program:**

  Click **Do not agree**. The confirmation screen closes and the survey is skipped. The confirmation screen will reappear one month later.

- **To uninstall Inkjet Printer/Scanner/Fax Extended Survey Program:**

  To uninstall the Inkjet Printer/Scanner/Fax Extended Survey Program, click **Uninstall** and follow the on-screen instructions.

- **Changing confirmation screen setting:**

  1. Make the following settings.
     - In Windows 10, right-click **Start** button and select **Programs and Features**.
     - In Windows 8.1, select **Control Panel** from **Settings** charm on **Desktop** > **Programs** > **Programs and Features**.
     - In Windows 7, select **Start** menu > **Control Panel** > **Programs** > **Programs and Features**.

Note

- A confirmation/warning dialog box may appear when installing, uninstalling or starting up software.

  This dialog box appears when administrative rights are required to perform a task.

  If you are logged in on an account with administrator privileges, follow the on-screen instructions.

2. Select **Canon Inkjet Printer/Scanner/Fax Extended Survey Program**.
3. Select **Change**.

   If you select **Yes** after you have followed the on-screen instructions, the confirmation screen will appear at the time of the next survey.

   If you select **No**, the information will be sent automatically.

   Note

   - If you select **Uninstall**, the Inkjet Printer/Scanner/Fax Extended Survey Program is uninstalled. Follow the on-screen instructions.

Q Inkjet Printer/Scanner/Fax Extended Survey Program Icon Appears (Mac OS)

A

If the Inkjet Printer/Scanner/Fax Extended Survey Program is installed, the printer and application software usage information is sent every month for about ten years. The **Inkjet Printer/Scanner/Fax Extended Survey Program** icon appears in the Dock when it is time to send the printer usage information.

Click the icon, read the information that appears, and then follow the instructions below.

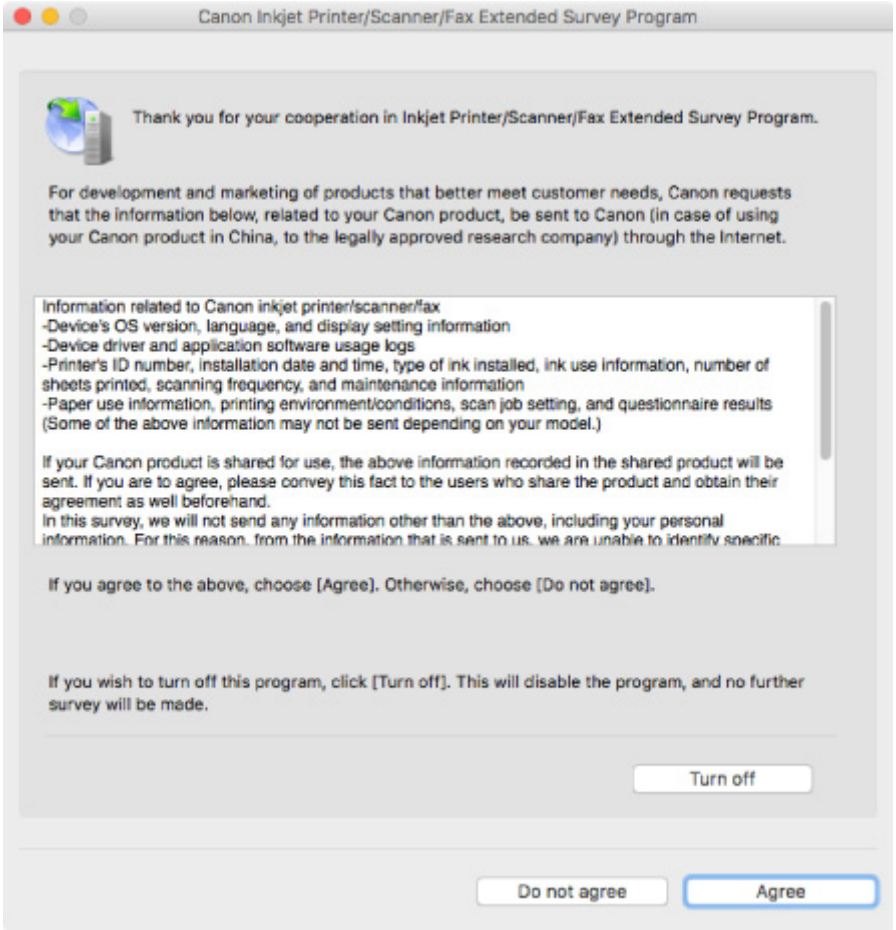

- **If you agree to participate in survey program:**

  Click **Agree** and follow the on-screen instructions. The printer usage information is sent via the Internet. Once you have completed the procedure, the information is subsequently sent automatically and the confirmation screen does not reappear.

  Note

  - If you clear the **Send automatically from the next time** check box, the information will not be sent automatically the next time and the **Inkjet Printer/Scanner/Fax Extended Survey Program** icon will appear in the Dock at the time of the next survey.

- **If you do not agree to participate in survey program:**

  Click **Do not agree**. The confirmation screen closes and the survey is skipped. The confirmation screen will reappear one month later.

- **To stop sending the information:**

  Click **Turn off**. This stops the Inkjet Printer/Scanner/Fax Extended Survey Program, and information is not sent. To resume the survey, see Changing setting:.

- **To uninstall Inkjet Printer/Scanner/Fax Extended Survey Program:**

  1. Stop Inkjet Printer/Scanner/Fax Extended Survey Program.

     Changing setting:

2. Select **Applications** from **Go** menu of Finder, double-click the **Canon Utilities** folder and **Inkjet Extended Survey Program** folder.
3. Move **Canon Inkjet Printer/Scanner/Fax Extended Survey Program.app** to **Trash**.
4. Restart computer.

   Empty **Trash** and restart your computer.

- **Changing setting:**

  To display the confirmation screen every time the printer usage information is sent or to resume surveying, follow the procedure below.

  1. Select **Applications** from **Go** menu of Finder, double-click the **Canon Utilities** folder and **Inkjet Extended Survey Program** folder.
  2. Double-click **Canon Inkjet Printer/Scanner/Fax Extended Survey Program** icon.

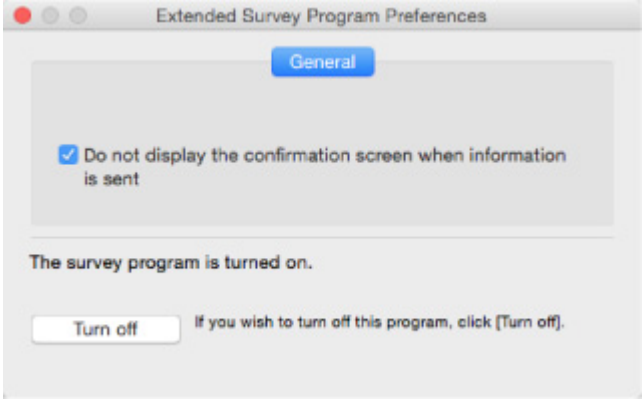

  - **Do not display the confirmation screen when information is sent**:

    If the check box is selected, the information will be sent automatically.

    If the check box is not selected, **Inkjet Printer/Scanner/Fax Extended Survey Program** icon will appear in the Dock at the time of the next survey. Click the icon and follow the on-screen instructions.

  - **Turn off**/**Turn on** button:

    Click the **Turn off** button to stop the Inkjet Printer/Scanner/Fax Extended Survey Program.

    Click the **Turn on** button to restart the Inkjet Printer/Scanner/Fax Extended Survey Program.

List of Support Code for Error

Support code appears on the touch screen and your computer screen when errors occur.

A "support code" is an error number, and appears along with an error message.

When an error occurs, check the support code displayed on the touch screen and computer screen and take the appropriate action in response.

Support Code Appears on Touch Screen and Computer Screen

- **1000 to 1ZZZ**

  1000 1003 1200 1240 1270 1300

  1303 1304 1309 1310 1313 1401

  1403 1405 140B 1410 1411 1412

  1413 1414 1551 1552 1600 1660

  1684 1688 1689 168C 1700 1701

  1730 1731 1871 1874 1890

- **2000 to 2ZZZ**

  2110 2113 2114 2120 2123 2700

  2900 2901

- **3000 to 3ZZZ**

  3402 3403 3405 3407 3408 3410

  3411 3412 3413 3438 3439 3440

  3441 3442 3443 3444 3445 3446

  3447

- **4000 to 4ZZZ**

  4100 4103 4104 495A

- **5000 to 5ZZZ**

  5011 5012 5050 5100 5200 520E

  5400 5700 5B00 5B01 5C02

- **6000 to 6ZZZ**

  6000 6001 6004 6500 6502 6800

  6801 6830 6831 6832 6833 6900

  6901 6902 6910 6911 6930 6931

  6932 6933 6936 6937 6938 6940

  6941 6942 6943 6944 6945 6946

  6951 6A80 6A81

- **8000 to 8ZZZ**

  8300

- **A000 to ZZZZ**

  B202 B203 B204 B205 C000

For paper jam support codes, see also List of Support Code for Error (Paper Jams).

List of Support Code for Error (Paper Jams)

If paper jams, remove it following the appropriate procedure as shown below.

- If you can see the jammed paper at the paper output slot or the rear tray:
  - If the paper fed from the rear tray is jammed:
    - 1300
- If you cannot see the jammed paper at the paper output slot or the rear tray:
  - If the paper fed from the cassette is jammed:
    - 1303
  - If the paper is jammed when performing automatic duplex printing:
    - 1304
  - If the paper is jammed as the printer pulled in the printed paper:
    - 1313
  - If the paper tears and you cannot remove it from the paper output slot or if the paper is jammed inside the printer:
    - Paper Is Jammed inside Printer
- Cases other than above:
  - Other Cases

1300

Cause

Paper is jammed when feeding paper from rear tray.

What to Do

If the paper fed from the rear tray is jammed, remove the jammed paper from the paper output slot or from the rear tray following the instructions below.

1. Slowly pull out paper, either from paper output slot or from rear tray, whichever is easier.

   Hold the paper with both hands, and pull it out slowly so as not to tear it.

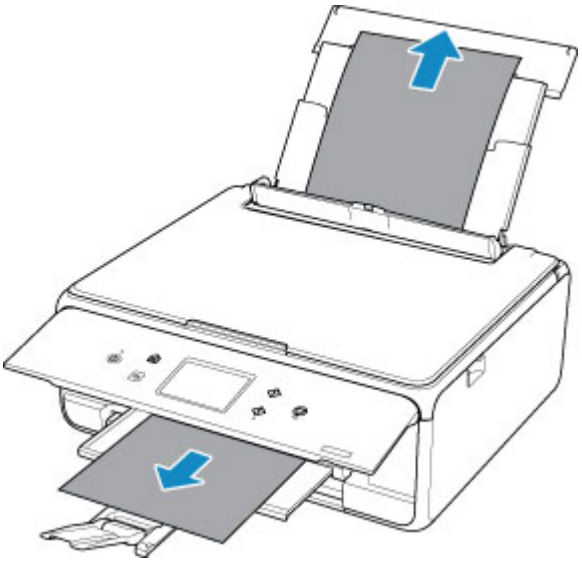

Note

- If you cannot pull out the paper, turn the printer back on without pulling forcibly. The paper may be ejected automatically.
- If paper becomes jammed during printing and you need to turn off the printer to remove it, press the **Stop** button to stop the printing before you turn off the printer.
- If the paper tears and you cannot remove the jammed paper from the paper output slot or the rear tray, remove the paper from inside the printer.

  Paper Is Jammed inside Printer

- If you cannot pull the paper out from the paper output slot or from the rear tray, try to pull the paper out from the rear side of the printer.

  Removing Jammed Paper from Rear Side

2. Reload paper and select **OK** on printer's touch screen.

   The printer resumes printing. Reprint the page you were printing if it was not printed properly due to the paper jam.

If you turned off the printer in step 1, the print data that was sent to the printer is erased. Redo the printing.

Note

- When reloading the paper, make sure you are using suitable paper and loading it correctly.
- We recommend using paper sizes other than A5 to print documents with photos or graphics. A5 paper may curl and jam as it leaves the printer.

If the measures above do not solve the problem, contact your nearest Canon service center to request a repair.

1303

Cause

Paper is jammed when feeding paper from cassette.

What to Do

1. Remove jammed paper.
   - If the paper is jammed at the paper output slot:

     1300
   - If the paper is jammed inside the printer:

     Paper Is Jammed inside Printer
   - If the paper is jammed at the feeder of the cassette:

     Pull out the cassette, and then remove the paper slowly with both hands.

   - If none of the above is applied, see Removing Jammed Paper from Rear Side to open the rear cover and to remove the paper.
2. Load paper in cassette properly.

   When you load A4 or Letter-sized paper in the cassette, make sure you have extended it.

   Loading Paper in the Cassette
2. Perform printing or copying again.

1304

Cause

Paper is jammed when performing automatic duplex printing.

What to Do

1. Remove jammed paper.
   - If the paper is jammed at the paper output slot:

     1300
   - If the paper is jammed inside the printer:

     Paper Is Jammed inside Printer
   - If the paper is jammed at the feeder of the cassette:

     Pull out the cassette, and then remove the paper slowly with both hands.

   - If none of the above is applied, see Removing Jammed Paper from Rear Side to open the rear cover and to remove the paper.
2. Load paper in cassette properly.

   When you load A4 or Letter-sized paper in the cassette, make sure you have extended it.

   Loading Paper in the Cassette
2. Perform printing or copying again.

1313

Cause

Paper is jammed as printer pulled in printed paper.

What to Do

If the paper is jammed as the printer pulled in the printed paper, try to remove the paper from the following locations.

- Paper output slot

  1300

- Inside of the printer

  Paper Is Jammed inside Printer

If the measures above do not solve the problem, see Removing Jammed Paper from Rear Side to open the rear cover and to remove the paper.

Paper Is Jammed inside Printer

If the jammed paper tears and you cannot remove the paper from the paper output slot, or if the jammed paper remains inside the printer, remove the paper following the instructions below.

Note

- If paper becomes jammed during printing and you need to turn off the printer to remove it, press the **Stop** button to stop the printing before you turn off the printer.

1. Turn off printer and unplug it.

2. Open scanning unit / cover.

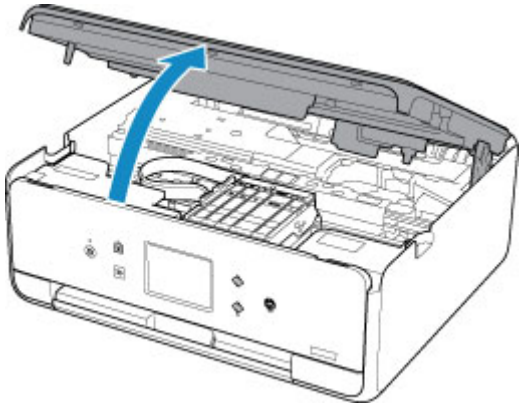

Important

- Do not touch white belt (A).

If you soil or scratch this part by touching it with paper or your hand, it could damage the printer.

3. Check if jammed paper is under print head holder.

If the jammed paper is under the print head holder, move the print head holder to the far right or left, whichever makes it easier to remove the paper.

When moving the print head holder, hold the top of the print head holder and slide it slowly to the far right or left.

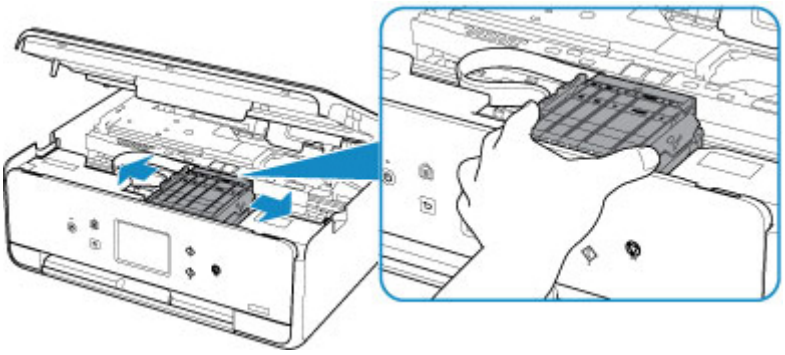

4. Hold jammed paper firmly in both hands.

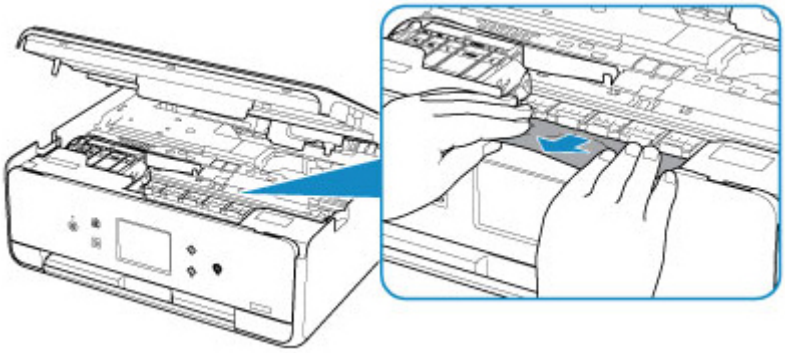

If the paper is rolled up, pull out it.

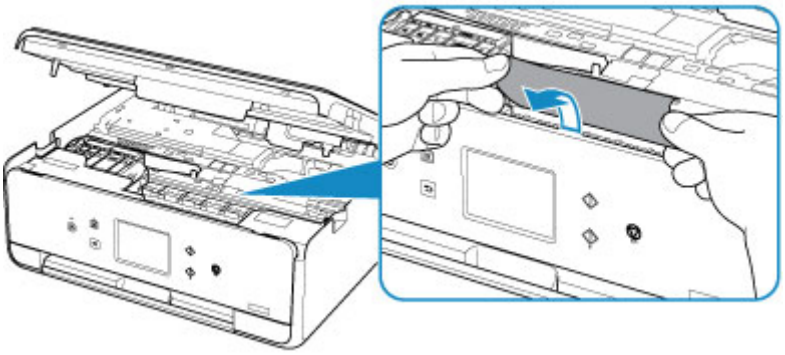

5. Slowly pull out paper, so as not to tear it.

Pull out the paper at an angle of about 45 degrees.

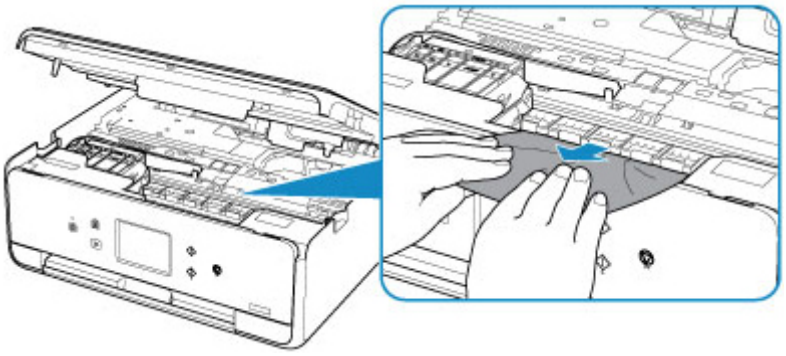

6. Make sure all jammed paper is removed.

If the paper tears when you pull out it, a bit of paper may remain in the printer. Check the following and remove any remaining paper.

- Any paper left under the print head holder?
- Any small bits of paper left in the printer?
- Any paper left in the left and right empty spaces (B) in the printer?

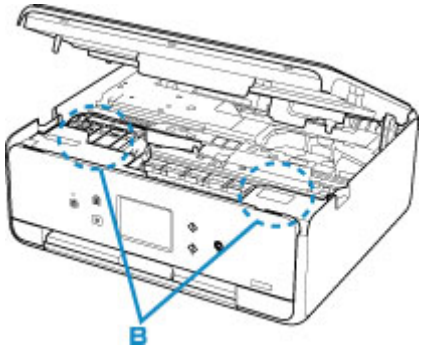

7. Close scanning unit / cover.

   To close the scanning unit / cover, hold it up once, and then take it down gently.

   All jobs in the print queue are canceled. Redo the printing.

Note

- When reloading the paper, make sure you are using suitable paper and loading it correctly. If a paper jam message appears on the touch screen or on your computer screen when you resume printing after removing all the jammed paper, there may be some paper still inside the printer. Check the printer again for any remaining bits of paper.

If the measures above do not solve the problem, contact your nearest Canon service center to request a repair.

Removing Jammed Paper from Rear Side

Note

- If paper becomes jammed during printing and you need to turn off the printer to remove it, press the **Stop** button to stop the printing before you turn off the printer.

1. Rotate printer so that rear side of printer faces toward you.

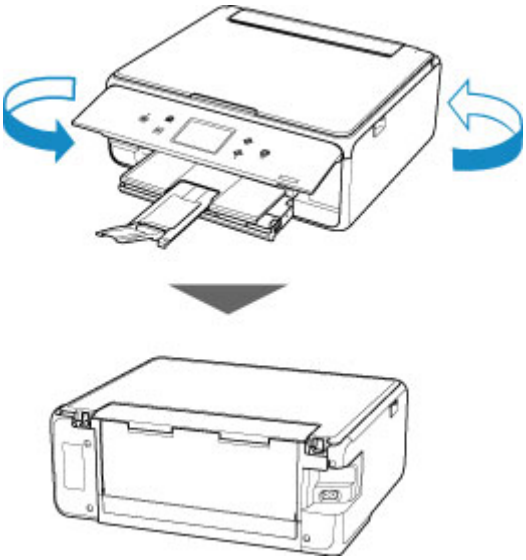

2. Open rear tray cover and then pull up paper support.

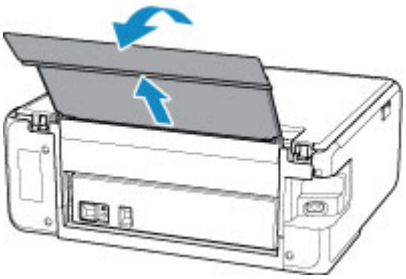

3. Detach rear cover.

   Pull out the rear cover.

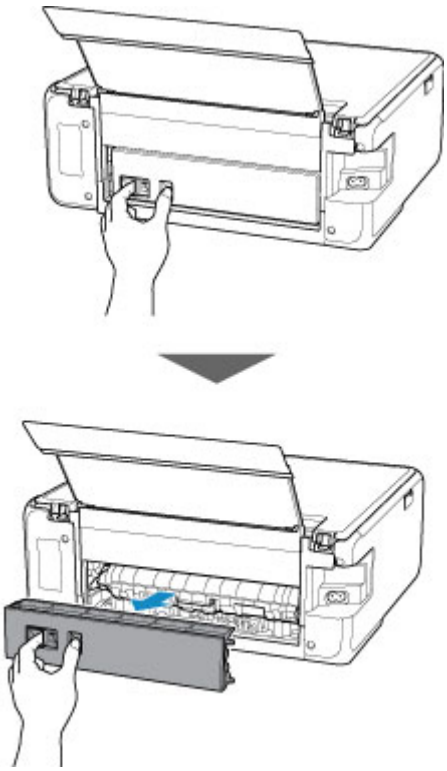

4. Slowly pull out paper.

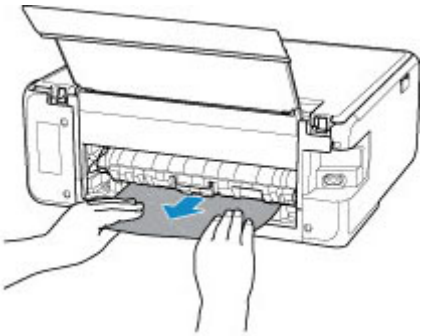

Note

- Do not touch the inner parts of the printer.

If you were not able to remove the paper in this step, detach the transport unit cover and remove the paper by following these steps.

1. Detach transport unit cover.

   Lift up the transport unit cover and pull out it.

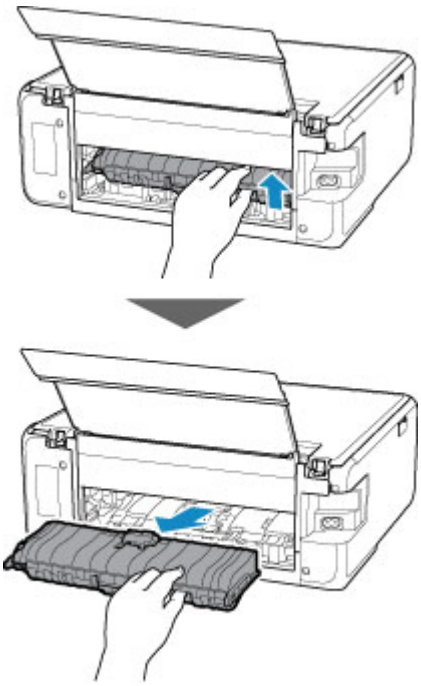

2. Slowly pull out paper.

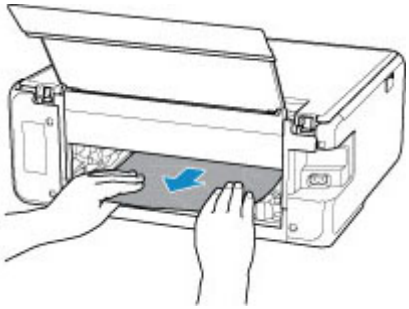

Note

- Do not touch the inner parts of the printer.

3. Make sure all jammed paper is removed.
4. Attach transport unit cover.

   Insert the transport unit cover slowly all the way into printer and take down the transport unit cover.

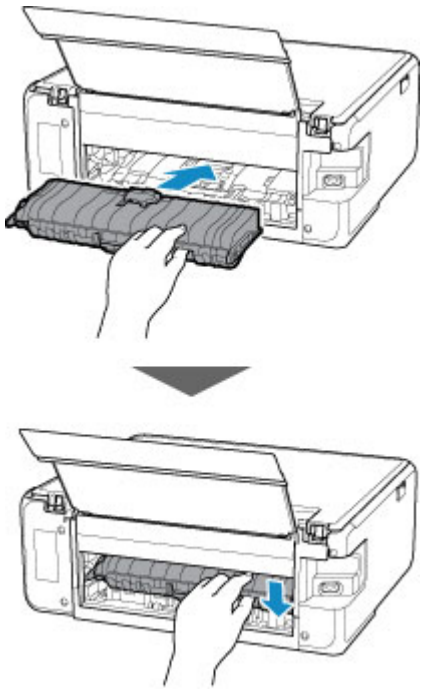

5. Attach rear cover.

   Insert the projections of the right side of the rear cover into the printer, and then push the left side of the rear cover until it is closed completely.

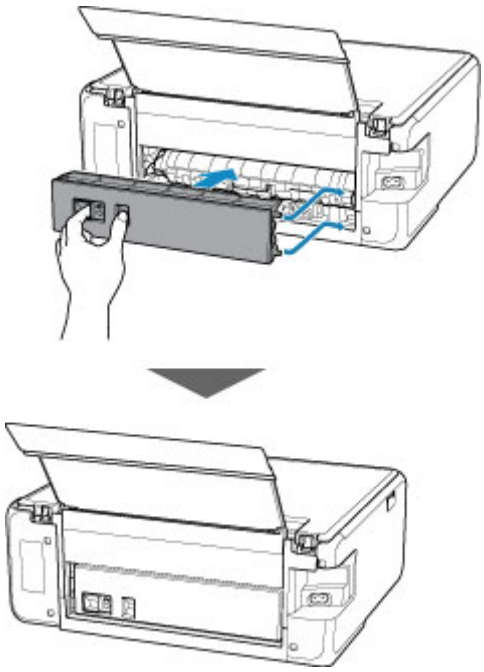

If the measures above do not solve the problem, contact your nearest Canon service center to request a repair.

1000

Cause

Possible causes include the following.

- There is no paper in the rear tray.
- Paper is not loaded in the rear tray properly.

What to Do

Take the corresponding actions below.

- Load paper in the rear tray.
- Align the paper guides with the both edges of the paper when you load paper in the rear tray.
- Set paper information for the paper in the rear tray.

After carrying out the above measures, select **OK** on the touch screen.

Important

- Be sure to close the feed slot cover after loading paper in the rear tray. If the feed slot cover is open, paper cannot be fed.

Note

- After loading paper in the rear tray, the screen for setting rear tray paper information appears. Set paper information for the paper in the rear tray.
- To cancel printing, press the printer's **Stop** button.

1003

Cause

Possible causes include the following.

- There is no paper in the cassette.
- Paper is not loaded in the cassette properly.

What to Do

Take the corresponding actions below.

- Load paper in the cassette.
- Align the paper guides with the both edges of the paper when you load paper in the cassette.
- Set paper information for the paper in the cassette.

After carrying out the above measures, select **OK** on the touch screen.

Note

- Once the cassette is inserted, the screen for setting cassette paper information appears. Set paper information for the paper in the cassette.
- The loadable paper differs depending on the paper source.

  The loadable paper in the cassette is A4, Letter, A5, or B5 size plain paper.
- To cancel printing, press the printer's **Stop** button.

1200

Cause

Scanning unit/cover is open.

What to Do

Close the scanning unit / cover and wait for a while.

Do not close it while you are replacing an ink tank.

1401

Cause

Print head may be damaged.

What to Do

Turn off the printer and turn it back on.

If this does not solve the problem, contact your nearest Canon service center to request a repair.

1600

Cause

Ink may have run out.

What to Do

Replacing the ink tank is recommended.

If printing is in progress and you want to continue printing, tap **OK** on the printer with the ink tank installed. Then printing can continue. Replacing the ink tank is recommended after the printing. The printer may be damaged if printing is continued under the ink out condition.

1660

Cause

The ink tank cannot be recognized.

What to Do

Printing cannot be performed because the ink tank is not installed or is not compatible with this printer.

Check the ink tank.

If you want to cancel printing, press the printer's **Stop** button.

1688

Cause

The ink has run out.

What to Do

Replace the ink tank and close the scanning unit (cover).

Printing under the current condition may damage the printer.

If you want to continue printing in this condition, you need to disable the function for detecting the remaining ink level. Press and hold the printer's **Stop** button for at least 5 seconds, and then release it.

With this operation, disabling the function for detecting the remaining ink level is memorized. Please be advised that Canon shall not be liable for any malfunction or trouble which may be caused by continuation of printing under the ink out condition.

Note

- If the function for detecting the remaining ink level is disabled, the ink tank is displayed in white on the touch screen when the current estimated ink level is checked.

1689

Cause

Printer detected ink out condition.

What to Do

Replace the ink tank and close the scanning unit (cover).

An ink tank that was once empty is installed.

Printing under the ink out condition may damage the printer.

If you want to continue printing, you need to disable the function for detecting the remaining ink level. To disable this function, press and hold the printer's **Stop** button for at least 5 seconds, and then release it.

With this operation, disabling the function for detecting the remaining ink level is memorized. Please be advised that Canon shall not be liable for any malfunction or trouble caused by continuation of printing under the ink out condition or by using refilled ink tanks.

Note

- If the function for detecting the remaining ink level is disabled, the ink tank is displayed in white on the touch screen when the current estimated ink level is checked.

1700

Cause

Ink absorber is almost full.

What to Do

Select **OK** on the touch screen to continue printing. Contact your nearest Canon service center to request a repair.

Note

- In the case of warnings or errors caused by remaining ink levels, the printer cannot print or scan.

1890

Cause

Tape for securing print head holder during transportation may still be attached.

What to Do

Open the scanning unit / cover and make sure the tape for securing the print head holder during transportation has been removed.

If the tape is still there, remove it and close the scanning unit / cover.

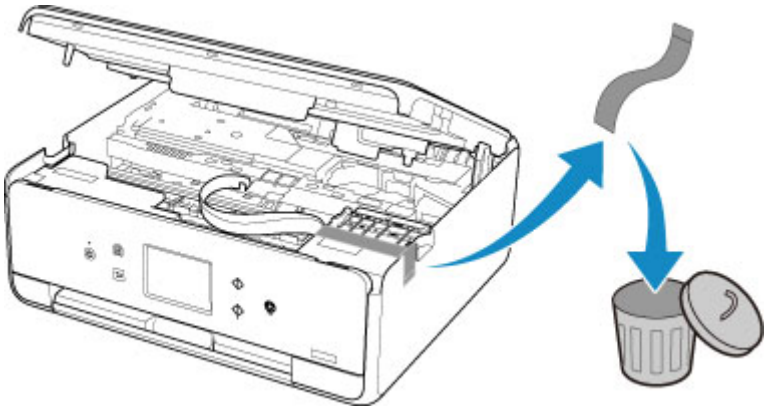

If this does not solve the problem, contact your nearest Canon service center to request a repair.

2110

Cause

Paper settings for printing or copying do not match cassette paper information set on printer.

Note

- See below for the correct correspondence between paper settings made on the printer driver or on the touch screen.
  - Paper Settings on the Printer Driver and the Printer (Media Type) (Windows)
  - Paper Settings on the Printer Driver and the Printer (Paper Size) (Windows)
- For copying, make the copy paper settings to match cassette paper information set on the printer.
- See below for details on cassette paper information set on the printer.
  - Paper Settings

If the print or copy paper settings do not match cassette paper information set on the printer, as shown below, a message appears on the touch screen.

- Print settings specified on the printer driver:

  Paper size: A5

  Media type: Plain paper

- Cassette paper information set on the printer:

  Paper size: A4

  Media type: Plain paper

After selecting **OK** on the touch screen, the print or copy paper settings appear below the message.

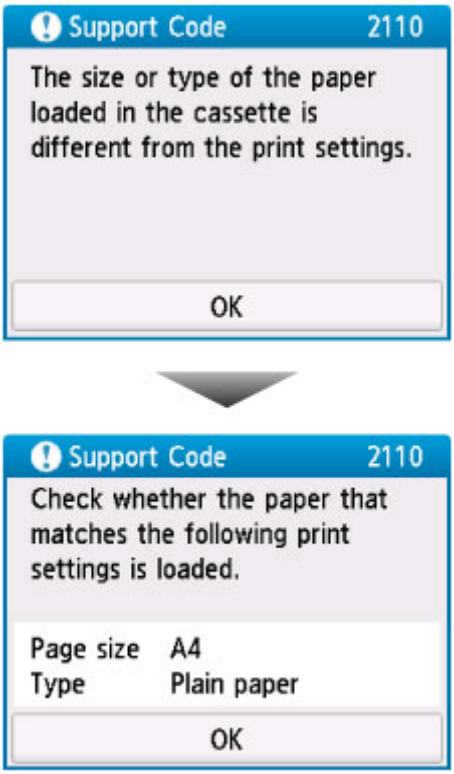

What to Do

Select **OK** on the touch screen again to display the screen below.

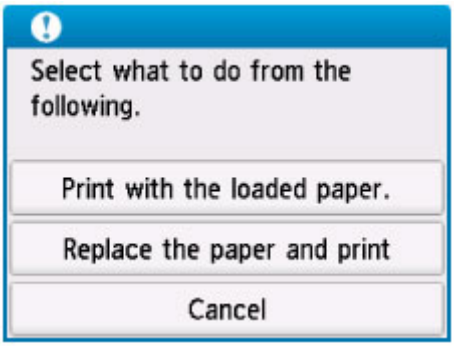

Select the appropriate action.

Note

- Depending on settings, some of the options below may not appear.

Print with the loaded paper.

Select this option to print or copy onto the paper in the cassette without changing the paper settings.

For example, if the print or copy paper setting is A5, and cassette paper information is set to A4, the A5 size setting is used to print or copy onto the paper in the cassette.

Replace the paper and print

Select this option to print after changing the paper in the cassette.

For example, if the print or copy paper setting is A5, and cassette paper information is set to A4, change the paper in the cassette to A5 paper and proceed with printing or copying.

Once you have inserted the cassette after changing the paper, the screen for setting cassette paper information appears. Set paper information for the paper in the cassette.

Note

- If you do not know what paper information to set, press the **Back** button. The previous screen appears, showing the paper size and media type. Check the paper settings and set them as cassette paper information.
- See below for the correct correspondence between paper settings made on the printer driver or on the touch screen.
  - Paper Settings on the Printer Driver and the Printer (Media Type) (Windows)
  - Paper Settings on the Printer Driver and the Printer (Paper Size) (Windows)

Cancel

Cancels printing.

Select this option when you want to change the print or copy paper settings. Change the paper settings and retry printing.

Note

- To suppress the misprint prevention message, change the setting as described below. When you suppress the message, the printer uses the paper settings for printing or copying onto the paper in the cassette regardless of whether or not the paper matches these settings.

- To change the message view setting when printing or copying using the operation panel of the printer:
  - Feed settings
- To change the message view setting when printing using the printer driver:
  - Changing the Printer Operation Mode (Windows)
  - Changing the Printer Operation Mode (Mac OS)

2900

Cause

Scanning print head alignment sheet failed.

What to Do

Select **OK** on the printer's touch screen and check the following.

- Make sure the print head alignment sheet is set in the correct position and orientation on the platen glass.
- Make sure the platen glass and the print head alignment sheet are not dirty.
- Make sure the loaded paper is correct.

  For print head alignment, load A4 or Letter-sized plain paper.

- Make sure the print head nozzle is not clogged.

  Check the print head condition by printing the nozzle check pattern.

After checking the above, start over auto print head alignment from the beginning.

If the error is still not resolved, try manual print head alignment.

2901

Cause

Print head alignment pattern has been printed and printer is waiting to scan sheet.

What to Do

Scan the printed alignment pattern.

1. Load print head alignment sheet on platen glass.

   Place the printed side down and align the mark ◢ in the bottom right corner of the sheet with the alignment mark ⬊.

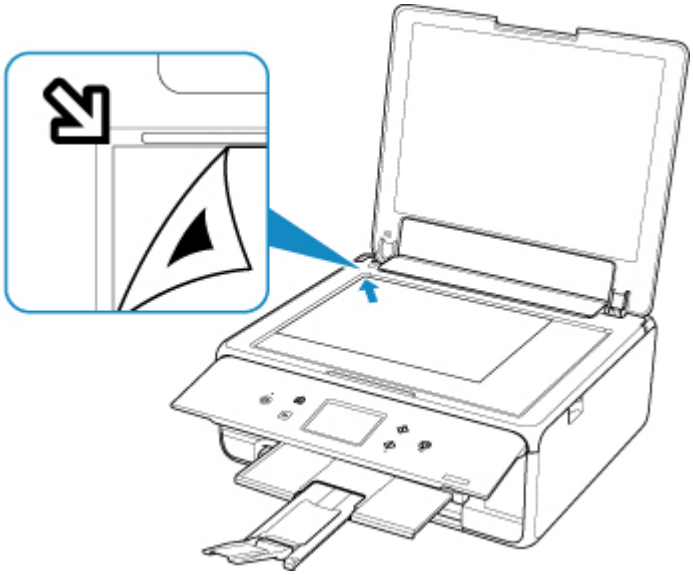

2. Slowly close the document cover and select **OK** on printer's touch screen.

   The printer starts scanning the print head alignment sheet, and automatically adjusts the print head position.

4103

Cause

Cannot perform printing with current print settings.

What to Do

Press the printer's **Stop** button to cancel printing.

Then change the print settings and retry printing.

5011

Cause

Printer error has occurred.

What to Do

Turn off printer and unplug it.

Plug in the printer again and turn it back on.

If this does not solve the problem, contact your nearest Canon service center to request a repair.

5012

Cause

Printer error has occurred.

What to Do

Turn off printer and unplug it.

Plug in the printer again and turn it back on.

If this does not solve the problem, contact your nearest Canon service center to request a repair.

5100

Cause

Printer error has occurred.

What to Do

Cancel printing and turn off the printer.

Check the following:

- Make sure print head holder motion is not impeded by tapes for securing the print head holder during transportation, jammed paper, etc.

  Remove any impediment.

- Make sure the ink tanks are properly installed.

  Press ink tanks until they click into place.

Turn the printer back on.

If this does not solve the problem, contact your nearest Canon service center to request a repair.

Important

- When clearing an impediment to print head holder motion, be careful not to touch white belt (A).

  If you soil or scratch this part by touching it with paper or your hand, it could damage the printer.

5200

Cause

Printer error has occurred.

What to Do

Turn off printer and unplug it.

After a while, plug in the printer again and turn it back on.

If this does not solve the problem, contact your nearest Canon service center to request a repair.

5B00

Cause

Printer error has occurred.

What to Do

Contact your nearest Canon service center to request a repair.

Note

- In the case of warnings or errors caused by remaining ink levels, the printer cannot print or scan.

6000

Cause

Printer error has occurred.

What to Do

If the paper is jammed, remove it depending on the jammed location and cause.

- List of Support Code for Error (Paper Jams)

Turn off printer and unplug it.

Plug in the printer again and turn it back on.

If this does not solve the problem, contact your nearest Canon service center to request a repair.

C000

Cause

Printer error has occurred.

What to Do

Cancel printing and turn off the printer.

Check the following:

- Make sure print head holder motion is not impeded by tapes for securing the print head holder during transportation, jammed paper, etc.

  Remove any impediment.

- Make sure the ink tanks are properly installed.

  Press ink tanks until they click into place.

Turn the printer back on.

If this does not solve the problem, contact your nearest Canon service center to request a repair.

Important

- When clearing an impediment to print head holder motion, be careful not to touch white belt (A).

  If you soil or scratch this part by touching it with paper or your hand, it could damage the printer.