Canon

PRO-310 series

Online Manual

English

Contents

Symbols Used in This Document. 14
Trademarks. 15
Licenses. 16
Basic Operations. 42
Printer Parts. 43
Front. 44
Back / Side. 46
Inside. 48
Operation Panel. 49
Using the Printer. 50
Turning the Printer On and Off. 51
Placing Multi-purpose Tray. 53
Cautions When Printing with Multi-purpose Tray. 54
Placing/Removing a Printable Disc. 55
Printing. 62
Printing from Your Computer (Windows). 63
Basic Printing Setup. 64
Main Controls (Basic Settings Tab). 66
Basic Settings Tab Description. 67
Paper Settings on the Printer Driver and the Printer (Media Type). 75
Paper Settings on the Printer Driver and the Printer (Paper Size). 78
Registering a Frequently Used Printing Profile. 80
Preventing Printing Errors. 82
Set Media Type, Quality, etc. (Media/Quality Tab). 83
Media/Quality Tab Description. 84
Switching the Paper Source to Match the Purpose. 91
Grayscale Printing. 93
Adjusting Tone. 95
Specifying Color Correction. 98
Optimal Photo Printing of Image Data. 99
Adjusting Colors with the Printer Driver. 101
Printing with ICC Profiles. 103

Interpreting the ICC Profile. . . . 106
Adjust Colors. . . . 107
Adjusting Brightness. . . . 109
Adjusting Contrast. . . . 111
Changing the Clear Coating Settings. . . . 113
Set the Layout of Printed Documents (Page Setup Tab). . . . 116
Page Setup Tab Description. . . . 117
Setting the Number of Copies and Printing Order. . . . 128
Perform Borderless Printing. . . . 130
Page Layout Printing. . . . 132
Tiling/Poster Printing. . . . 133
Booklet Printing. . . . 135
Duplex Printing. . . . 136
Perform Long-form Printing. . . . 137
Printing on Postcards. . . . 139
Print Using Washi. . . . 140
Setting Paper Dimensions (Custom Size). . . . 141
Perform maintenance or settings (Maintenance tab). . . . 143
Maintenance Tab Description. . . . 144
Cleaning the Print Heads. . . . 149
Printing a Nozzle Check Pattern. . . . 151
Overview of the Printer Driver. . . . 152
Canon IJ Printer Driver. . . . 153
Opening Printer Driver's Setup Screen. . . . 154
Canon IJ Status Monitor. . . . 155
Checking Ink Status from Your Computer. . . . 156
Instructions for Use (Printer Driver). . . . 157
Canon IJ Preview. . . . 159
Updating Media Information in Printer Driver. . . . 160
Deleting the Undesired Print Job. . . . 162
Canon IJ Status Monitor Description. . . . 163
Canon IJ Preview Description. . . . 166
Updating the Driver. . . . 169
Printing from Printer. . . . 171
Printing Templates Such as Lined or Graph Paper. . . . 172

Printing from Smartphone/Tablet. 174
Handling Paper. 175
Loading Paper. 176
Paper Sources to Load Paper. 177
Loading Paper in the Top Feed. 179
Loading Paper in the Manual Feed Tray. 185
Register Paper Information. 189
Information about Paper. 192
Media Types You Can Use. 193
Paper Load Limit. 197
Handling Paper. 199
Before Printing on Art Paper. 200
Settings. 202
Changing Settings from Operation Panel. 203
LCD and Operation Panel. 204
Setting Items on Operation Panel. 207
Maintenance. 209
LAN settings. 210
Security settings. 216
Print settings. 217
Other printer settings. 219
Language selection. 221
Firmware update. 222
Paper-related settings. 223
Power control. 224
Quiet setting. 225
Auto maintenance settings. 226
Reset settings. 227
Web service setup. 229
Printer information. 230
Setting Administrator Password on Operation Panel. 231
Changing Printer Settings from Your Computer (Windows). 233
Changing the Print Options. 234
Reducing the Printer Noise. 235

Changing the Printer Operation Mode. 236
Changing Printer's Setting Using Web Browser. 237
Start up Remote UI. 238
Changeable Setting Items Using Remote UI. 241
Security. 243
LAN settings. 245
Setting Passwords Using Remote UI. 247
Registering Printer's Root Certificate to Web Browser for SSL Communication. 249
Registering Printer's Root Certificate to Local Computer for SSL Communication. 253
Generating Server Certificate. 259
Network Setting. 261
Printer Connection Methods. 262
Wi-Fi Connection. 264
WPS Connection. 267
WPS (PIN Code) Connection. 270
Manual connect. 272
Easy wireless connect. 277
Wireless Direct Connection. 279
Wired Connection. 284
USB Connection. 288
Default Network Settings. 289
Another Printer Found with Same Name. 291
Printing Network Settings. 292
Countermeasures against Unauthorized Access. 293
Network Status and Troubleshooting. 296
Sharing the Printer on a Network (Windows). 298
Setting Up a Shared Printer. 299
Restrictions on Printer Sharing. 301
Maintenance. 302
Adjustments for Better Print Quality. 303
Maintenance Procedure. 304
Checking for Nozzle Clogging. 306
Cleaning the Print Head. 310
Deep Print Head Cleaning. 314

Adjustment to Straighten Lines and Align Colors. 317
Automatic Adjustment to Straighten Lines and Align Colors. 318
Manual Adjustment to Straighten Lines and Align Colors. 320
Replacing Consumables. 323
Replacing Ink Tanks. 324
Checking Ink Level. 329
Cleaning the Printer. 331
Cleaning the Printer Exterior. 332
Cleaning Paper Feed Rollers. 333
Performing Bottom Plate Cleaning. 336
Performing Maintenance Functions from Your Computer (Windows). 338
Other Maintenance. 339
Transporting Your Printer. 340
Firmware update. 341
Frequently Asked Questions. 342
Problems with the Printing Quality. 345
Printing is faint/Streaks. 346
Banding in different colors occurs/Colors in printed images are uneven. 348
Paper Is Smudged/Printed Surface Is Scratched/Ink Blots/Paper Curl. 351
Back of Paper Is Smudged. 355
Printed colors are inaccurate. 357
Documents are printed in monochrome. 359
Lines Are Misaligned/Distorted. 360
Lines Incomplete or Missing (Windows). 362
Images Incomplete/Cannot Complete Printing. 363
Vertical Line Next to Image. 364
Cannot Configure Network Settings. 365
Message Appears on Computer During Setup. 366
Cannot Proceed Beyond Printer Connection Screen (Cannot Find Printer Connected via USB). 368
"Failed to connect to the wireless router." Appears. 370
Printer Cannot Be Used After Replacing Wireless Router or Changed Router Settings. 372
Privacy Separator/SSID Separator/Network Separation Function. 374
Setting Up Using Smartphone/Tablet. 375
Cannot Find Printer on Network. 376

Cannot Find Printer on Network. 377
Searching Printer by IP Address or Host Name During Setup. 382
Cannot Print over Network. 386
Cannot Print Using AirPrint. 387
Cannot Print from Smartphone/Tablet. 388
Network Connection Problems. 392
Network Settings and Common Problems. 393
Solve Network Troubles with The Printer's Diagnostic Functions. 394
Switching Printer's Connection to Network or Devices. 401
Network Key (Password) Unknown. 403
Checking Wireless Router SSID/Key. 405
Cannot Remember Printer's Password. 406
Checking Network Information. 407
Restoring Printer's LAN Settings to Defaults. 410
Cannot Connect Smartphone/Tablet to Wireless Router. 411
Checking Wireless Router Network Name (SSID) for Smartphone/Tablet. 412
Printer Problems. 413
Printer Does Not Turn On. 414
Printer Turns Off Unexpectedly or Repeatedly. 415
USB Connection Problems. 416
LCD Is Off. 418
Print Head Holder Does Not Move to Replacement Position. 419
Printer Status Monitor Not Displayed (Windows). 420
Updating Printer Firmware. 421
Installation and Download Problems. 422
Failed to Printer Driver Installation (Windows). 423
Updating Printer Drivers in Network Environment (Windows). 424
Disable Function to Send Usage Information of Printer. 425
Setup Application Asks for the Administrator's Username and Password (Windows). 428
Enable Printing from PC/Smartphone/Tablet. 429
Installing Printer Drivers on PC without Network Connection (Windows). 430
Printing Problems. 431
Printer Does Not Print. 432
Printing Stops. 435
Cannot Print on the Disc Label. 436

Default Printer Keeps Changing (Windows). 438
Change to Offline (Windows)/Cannot Communicate (Windows). 439
No Ink Level Appears in Canon IJ Status Monitor (Windows). 441
Paper is not Fed or Ejected Properly. 442
What to Do When Paper Is Jammed. 443
Printer Does Not Pick up or Feed the Paper/"No Paper" Error. 451
Paper Does Not Feed from Paper Source Specified in Printer Driver (Windows). 454
What to Do If Paper Is Not Fed/Output Normally. 455
Paper Setting Problems. 457
I want to know the paper types that can be used in this printer. 458
Ink-related Problems. 459
Ink Does Not Come Out. 460
Printer consumes a lot of ink. 461
List of Support Code for Error. 462
When Error Occurred. 464
1000. 466
1001. 468
1002. 469
1006. 470
1013. 471
1062. 472
1200. 474
1250. 475
1261. 476
1300. 477
1308. 478
1351. 479
1401. 480
1403. 481
1405. 482
1408. 483
1409. 484

140A. 485
140C. 486
1410. 487
1411. 488
1412. 489
1413. 490
1414. 491
1415. 492
1416. 493
1417. 494
1418. 495
1419. 496
1500. 497
1551. 498
1552. 499
1570. 500
15A1. 501
15A2. 502
15A3. 503
1600. 504
1660. 505
1684. 506
168C. 507
1698. 508
1699. 509
1700. 510
1701. 511
1716. 512
1730. 513
1750. 514
1830. 515
1850. 516
1851. 517

1855. 518
1856. 519
1857. 520
2103. 521
2114. 522
2115. 524
2500. 526
2503. 527
3000. 528
3306. 529
3310. 530
3311. 531
3312. 532
3313. 533
3314. 534
3315. 535
3316. 536
3317. 537
3318. 538
3319. 539
3413. 540
3440. 541
3441. 542
3442. 543
3443. 544
3444. 545
3445. 546
3446. 547
3447. 548
3454. 549
3455. 550
4103. 551
4104. 552

4109. 553
410E. 554
4111. 555
495A. 556
5100. 557
5200. 558
520C. 559
520E. 560
5250. 561
5400. 562
5700. 563
5B00. 564
5B01. 565
5B16. 566
5B22. 567
5C02. 568
5C13. 569
5C14. 570
6000. 571
6001. 572
6004. 573
6500. 574
6502. 575
6503. 576
6700. 577
6701. 578
6800. 579
6801. 580
6830. 581
6831. 582
6832. 583
6833. 584
6900. 585

6901. 586
6902. 587
6910. 588
6920. 589
6921. 590
6930. 591
6931. 592
6932. 593
6933. 594
6940. 595
6941. 596
6942. 597
6943. 598
6944. 599
6945. 600
6946. 601
6A80. 602
6A81. 603
6D01. 604
7600. 605
7700. 606
7800. 607
7802. 608
8200. 609
8300. 610
B400. 611
C000. 612
C100. 613
C101. 614
Printer Information. 615
Safety. 616
Safety Precautions. 617

Regulatory Information. . . . 619
WEEE. . . . 621
Handling Precautions. . . . 634
When Repairing, Lending, or Disposing of the Printer. . . . 635
Legal Restrictions on Printing. . . . 636
Ink Tips. . . . 637
Specifications. . . . 638
Specifications. . . . 639
Print Area. . . . 642
Printing Area. . . . 643
Standard Sizes. . . . 645
Sizes for 0.98 inch (25 mm) Margin Paper. . . . 647
Printable Discs. . . . 649
Appendix. . . . 650
Online Manual. . . . 651

Symbols Used in This Document

Warning

Instructions that, if ignored, could result in death, serious personal injury, or property damage caused by incorrect operation of the equipment. These must be observed for safe operation.

Caution

Instructions that, if ignored, could result in personal injury or property damage caused by incorrect operation of the equipment. These must be observed for safe operation.

Important

Instructions including important information that must be observed to avoid damage and injury or improper use of the product. Be sure to read these instructions.

Note

Instructions including notes for operation and additional explanations.

Basics

Instructions explaining basic operations of your product.

Note

- Icons may vary depending on your product.

Trademarks

- Microsoft, Excel, Internet Explorer, Microsoft Edge, Microsoft Store, OneDrive, PowerPoint, Windows and Windows Vista are trademarks of the Microsoft group of companies.
- Mac, Mac OS, macOS, OS X, AirPort, App Store, AirPrint, the AirPrint logo, Safari, Bonjour, iPad, iPad Air, iPad mini, iPadOS, iPhone and iPod touch are trademarks of Apple Inc., registered in the U.S. and other countries.
- The Mopria® word mark and the Mopria® Logo are registered and/or unregistered trademarks of Mopria Alliance, Inc. in the United States and other countries. Unauthorized use is strictly prohibited.
- IOS is a trademark or registered trademark of Cisco in the U.S. and other countries and is used under license.
- Google Cloud Print, Google Chrome, Chrome OS, Chromebook, Android, Google Drive, Google Apps and Google Analytics are either registered trademarks or trademarks of Google LLC.
  Google Play and Google Play Logo are trademarks of Google LLC.
- Adobe, Acrobat, Flash, Photoshop, Illustrator, Adobe RGB and Adobe RGB (1998) are either registered trademarks or trademarks of Adobe Systems Incorporated in the United States and/or other countries.
- Adobe, Acrobat, Flash, Photoshop, Photoshop Elements, Lightroom, Adobe RGB and Adobe RGB (1998) are either registered trademarks or trademarks of Adobe Systems Incorporated in the United States and/or other countries.
- USB Type-C™ is a trademark of USB Implementers Forum.
- Amazon, Echo and Alexa are trademarks of Amazon.com, Inc. or its affiliates.
- Google, Google Home, and YouTube are trademarks of Google LLC.
- LINE is a registered trademark or trademark of LY Corporation.
- LINE Clova is a registered trademark of LY Corporation.
- Google Docs, and Google Drive are trademarks of Google LLC.
- App Store is a trademark of Apple Inc., registered in the U.S. and other countries.
- AOSS™ is a trademark of BUFFALO INC.
- Autodesk and AutoCAD are registered trademarks or trademarks of Autodesk, Inc., and/or its subsidiaries and/or affiliates in the USA and/or other countries.
- QR Code is a registered trademark of DENSO WAVE INCORPORATED in Japan and in other countries.
- HP-GL and HP-GL/2 are either registered trademarks or trademarks of HP Inc. in the United States and/or other countries.
- Mozilla Firefox is a trademark or registered trademark of Mozilla Foundation in the U.S. and/or other countries.
- Wi-Fi, WPA, WPA2 and WPA3 are either registered trademarks or trademarks of Wi-Fi Alliance.
- All other company names and products mentioned in this guide may be registered trademarks or trademarks of their respective companies.

Licenses

Copyright (c) 2003-2015 Apple Inc. All rights reserved.

Redistribution and use in source and binary forms, with or without modification, are permitted provided that the following conditions are met:

1. Redistributions of source code must retain the above copyright notice, this list of conditions and the following disclaimer.
2. Redistributions in binary form must reproduce the above copyright notice, this list of conditions and the following disclaimer in the documentation and/or other materials provided with the distribution.
3. Neither the name of Apple Inc. ("Apple") nor the names of its contributors may be used to endorse or promote products derived from this software without specific prior written permission.

THIS SOFTWARE IS PROVIDED BY APPLE AND ITS CONTRIBUTORS "AS IS" AND ANY EXPRESS OR IMPLIED WARRANTIES, INCLUDING, BUT NOT LIMITED TO, THE IMPLIED WARRANTIES OF MERCHANTABILITY AND FITNESS FOR A PARTICULAR PURPOSE ARE DISCLAIMED. IN NO EVENT SHALL APPLE OR ITS CONTRIBUTORS BE LIABLE FOR ANY DIRECT, INDIRECT, INCIDENTAL, SPECIAL, EXEMPLARY, OR CONSEQUENTIAL DAMAGES (INCLUDING, BUT NOT LIMITED TO, PROCUREMENT OF SUBSTITUTE GOODS OR SERVICES; LOSS OF USE, DATA, OR PROFITS; OR BUSINESS INTERRUPTION) HOWEVER CAUSED AND ON ANY THEORY OF LIABILITY, WHETHER IN CONTRACT, STRICT LIABILITY, OR TORT (INCLUDING NEGLIGENCE OR OTHERWISE) ARISING IN ANY WAY OUT OF THE USE OF THIS SOFTWARE, EVEN IF ADVISED OF THE POSSIBILITY OF SUCH DAMAGE.

Apache License

Version 2.0, January 2004

http://www.apache.org/licenses/
TERMS AND CONDITIONS FOR USE, REPRODUCTION, AND DISTRIBUTION

1. Definitions.

   "License" shall mean the terms and conditions for use, reproduction, and distribution as defined by Sections 1 through 9 of this document.

   "Licensor" shall mean the copyright owner or entity authorized by the copyright owner that is granting the License.

   "Legal Entity" shall mean the union of the acting entity and all other entities that control, are controlled by, or are under common control with that entity. For the purposes of this definition, "control" means (i) the power, direct or indirect, to cause the direction or management of such entity, whether by contract or otherwise, or (ii) ownership of fifty percent (50%) or more of the outstanding shares, or (iii) beneficial ownership of such entity.

   "You" (or "Your") shall mean an individual or Legal Entity exercising permissions granted by this License.

   "Source" form shall mean the preferred form for making modifications, including but not limited to software source code, documentation source, and configuration files.

"Object" form shall mean any form resulting from mechanical transformation or translation of a Source form, including but not limited to compiled object code, generated documentation, and conversions to other media types.

"Work" shall mean the work of authorship, whether in Source or Object form, made available under the License, as indicated by a copyright notice that is included in or attached to the work (an example is provided in the Appendix below).

"Derivative Works" shall mean any work, whether in Source or Object form, that is based on (or derived from) the Work and for which the editorial revisions, annotations, elaborations, or other modifications represent, as a whole, an original work of authorship. For the purposes of this License, Derivative Works shall not include works that remain separable from, or merely link (or bind by name) to the interfaces of, the Work and Derivative Works thereof.

"Contribution" shall mean any work of authorship, including the original version of the Work and any modifications or additions to that Work or Derivative Works thereof, that is intentionally submitted to Licensor for inclusion in the Work by the copyright owner or by an individual or Legal Entity authorized to submit on behalf of the copyright owner. For the purposes of this definition, "submitted" means any form of electronic, verbal, or written communication sent to the Licensor or its representatives, including but not limited to communication on electronic mailing lists, source code control systems, and issue tracking systems that are managed by, or on behalf of, the Licensor for the purpose of discussing and improving the Work, but excluding communication that is conspicuously marked or otherwise designated in writing by the copyright owner as "Not a Contribution."

"Contributor" shall mean Licensor and any individual or Legal Entity on behalf of whom a Contribution has been received by Licensor and subsequently incorporated within the Work.

2. Grant of Copyright License. Subject to the terms and conditions of this License, each Contributor hereby grants to You a perpetual, worldwide, non-exclusive, no-charge, royalty-free, irrevocable copyright license to reproduce, prepare Derivative Works of, publicly display, publicly perform, sublicense, and distribute the Work and such Derivative Works in Source or Object form.
3. Grant of Patent License. Subject to the terms and conditions of this License, each Contributor hereby grants to You a perpetual, worldwide, non-exclusive, no-charge, royalty-free, irrevocable (except as stated in this section) patent license to make, have made, use, offer to sell, sell, import, and otherwise transfer the Work, where such license applies only to those patent claims licensable by such Contributor that are necessarily infringed by their Contribution(s) alone or by combination of their Contribution(s) with the Work to which such Contribution(s) was submitted. If You institute patent litigation against any entity (including a cross-claim or counterclaim in a lawsuit) alleging that the Work or a Contribution incorporated within the Work constitutes direct or contributory patent infringement, then any patent licenses granted to You under this License for that Work shall terminate as of the date such litigation is filed.
4. Redistribution. You may reproduce and distribute copies of the Work or Derivative Works thereof in any medium, with or without modifications, and in Source or Object form, provided that You meet the following conditions:
    1. You must give any other recipients of the Work or Derivative Works a copy of this License; and
    2. You must cause any modified files to carry prominent notices stating that You changed the files; and

3. You must retain, in the Source form of any Derivative Works that You distribute, all copyright, patent, trademark, and attribution notices from the Source form of the Work, excluding those notices that do not pertain to any part of the Derivative Works; and
4. If the Work includes a "NOTICE" text file as part of its distribution, then any Derivative Works that You distribute must include a readable copy of the attribution notices contained within such NOTICE file, excluding those notices that do not pertain to any part of the Derivative Works, in at least one of the following places: within a NOTICE text file distributed as part of the Derivative Works; within the Source form or documentation, if provided along with the Derivative Works; or, within a display generated by the Derivative Works, if and wherever such third-party notices normally appear. The contents of the NOTICE file are for informational purposes only and do not modify the License. You may add Your own attribution notices within Derivative Works that You distribute, alongside or as an addendum to the NOTICE text from the Work, provided that such additional attribution notices cannot be construed as modifying the License.

   You may add Your own copyright statement to Your modifications and may provide additional or different license terms and conditions for use, reproduction, or distribution of Your modifications, or for any such Derivative Works as a whole, provided Your use, reproduction, and distribution of the Work otherwise complies with the conditions stated in this License.

5. Submission of Contributions. Unless You explicitly state otherwise, any Contribution intentionally submitted for inclusion in the Work by You to the Licensor shall be under the terms and conditions of this License, without any additional terms or conditions. Notwithstanding the above, nothing herein shall supersede or modify the terms of any separate license agreement you may have executed with Licensor regarding such Contributions.
6. Trademarks. This License does not grant permission to use the trade names, trademarks, service marks, or product names of the Licensor, except as required for reasonable and customary use in describing the origin of the Work and reproducing the content of the NOTICE file.
7. Disclaimer of Warranty. Unless required by applicable law or agreed to in writing, Licensor provides the Work (and each Contributor provides its Contributions) on an "AS IS" BASIS, WITHOUT WARRANTIES OR CONDITIONS OF ANY KIND, either express or implied, including, without limitation, any warranties or conditions of TITLE, NON-INFRINGEMENT, MERCHANTABILITY, or FITNESS FOR A PARTICULAR PURPOSE. You are solely responsible for determining the appropriateness of using or redistributing the Work and assume any risks associated with Your exercise of permissions under this License.
8. Limitation of Liability. In no event and under no legal theory, whether in tort (including negligence), contract, or otherwise, unless required by applicable law (such as deliberate and grossly negligent acts) or agreed to in writing, shall any Contributor be liable to You for damages, including any direct, indirect, special, incidental, or consequential damages of any character arising as a result of this License or out of the use or inability to use the Work (including but not limited to damages for loss of goodwill, work stoppage, computer failure or malfunction, or any and all other commercial damages or losses), even if such Contributor has been advised of the possibility of such damages.
9. Accepting Warranty or Additional Liability. While redistributing the Work or Derivative Works thereof, You may choose to offer, and charge a fee for, acceptance of support, warranty, indemnity, or other liability obligations and/or rights consistent with this License. However, in accepting such obligations, You may act only on Your own behalf and on Your sole responsibility, not on behalf of any other Contributor, and only if You agree to indemnify, defend, and hold each Contributor harmless for any liability incurred by, or claims asserted against, such Contributor by reason of your accepting any

such warranty or additional liability.
END OF TERMS AND CONDITIONS

---- Part 1: CMU/UCD copyright notice: (BSD like) -----

Copyright 1989, 1991, 1992 by Carnegie Mellon University

Derivative Work - 1996, 1998-2000

Copyright 1996, 1998-2000 The Regents of the University of California

All Rights Reserved

Permission to use, copy, modify and distribute this software and its documentation for any purpose and without fee is hereby granted, provided that the above copyright notice appears in all copies and that both that copyright notice and this permission notice appear in supporting documentation, and that the name of CMU and The Regents of the University of California not be used in advertising or publicity pertaining to distribution of the software without specific written permission.

CMU AND THE REGENTS OF THE UNIVERSITY OF CALIFORNIA DISCLAIM ALL WARRANTIES WITH REGARD TO THIS SOFTWARE, INCLUDING ALL IMPLIED WARRANTIES OF MERCHANTABILITY AND FITNESS. IN NO EVENT SHALL CMU OR THE REGENTS OF THE UNIVERSITY OF CALIFORNIA BE LIABLE FOR ANY SPECIAL, INDIRECT OR CONSEQUENTIAL DAMAGES OR ANY DAMAGES WHATSOEVER RESULTING FROM THE LOSS OF USE, DATA OR PROFITS, WHETHER IN AN ACTION OF CONTRACT, NEGLIGENCE OR OTHER TORTIOUS ACTION, ARISING OUT OF OR IN CONNECTION WITH THE USE OR PERFORMANCE OF THIS SOFTWARE.

---- Part 2: Networks Associates Technology, Inc copyright notice (BSD) -----

Copyright (c) 2001-2003, Networks Associates Technology, Inc

All rights reserved.

Redistribution and use in source and binary forms, with or without modification, are permitted provided that the following conditions are met:

* Redistributions of source code must retain the above copyright notice, this list of conditions and the following disclaimer.
* Redistributions in binary form must reproduce the above copyright notice, this list of conditions and the following disclaimer in the documentation and/or other materials provided with the distribution.
* Neither the name of the Networks Associates Technology, Inc nor the names of its contributors may be used to endorse or promote products derived from this software without specific prior written permission.

THIS SOFTWARE IS PROVIDED BY THE COPYRIGHT HOLDERS AND CONTRIBUTORS ``AS IS'' AND ANY EXPRESS OR IMPLIED WARRANTIES, INCLUDING, BUT NOT LIMITED TO, THE IMPLIED WARRANTIES OF MERCHANTABILITY AND FITNESS FOR A PARTICULAR PURPOSE ARE DISCLAIMED. IN NO EVENT SHALL THE COPYRIGHT HOLDERS OR CONTRIBUTORS BE LIABLE FOR ANY DIRECT, INDIRECT, INCIDENTAL, SPECIAL, EXEMPLARY, OR CONSEQUENTIAL DAMAGES (INCLUDING, BUT NOT LIMITED TO, PROCUREMENT OF SUBSTITUTE GOODS OR SERVICES; LOSS OF USE, DATA, OR PROFITS; OR BUSINESS INTERRUPTION) HOWEVER CAUSED AND ON ANY THEORY OF LIABILITY, WHETHER IN CONTRACT, STRICT LIABILITY, OR TORT (INCLUDING NEGLIGENCE OR OTHERWISE) ARISING IN ANY WAY OUT OF THE USE OF THIS SOFTWARE, EVEN IF ADVISED OF THE POSSIBILITY OF SUCH DAMAGE.

---- Part 3: Cambridge Broadband Ltd. copyright notice (BSD) -----

Portions of this code are copyright (c) 2001-2003, Cambridge Broadband Ltd.

All rights reserved.

Redistribution and use in source and binary forms, with or without modification, are permitted provided that the following conditions are met:

* Redistributions of source code must retain the above copyright notice, this list of conditions and the following disclaimer.
* Redistributions in binary form must reproduce the above copyright notice, this list of conditions and the following disclaimer in the documentation and/or other materials provided with the distribution.
* The name of Cambridge Broadband Ltd. may not be used to endorse or promote products derived from this software without specific prior written permission.

THIS SOFTWARE IS PROVIDED BY THE COPYRIGHT HOLDER ``AS IS'' AND ANY EXPRESS OR IMPLIED WARRANTIES, INCLUDING, BUT NOT LIMITED TO, THE IMPLIED WARRANTIES OF MERCHANTABILITY AND FITNESS FOR A PARTICULAR PURPOSE ARE DISCLAIMED. IN NO EVENT SHALL THE COPYRIGHT HOLDER BE LIABLE FOR ANY DIRECT, INDIRECT, INCIDENTAL, SPECIAL, EXEMPLARY, OR CONSEQUENTIAL DAMAGES (INCLUDING, BUT NOT LIMITED TO, PROCUREMENT OF SUBSTITUTE GOODS OR SERVICES; LOSS OF USE, DATA, OR PROFITS; OR BUSINESS INTERRUPTION) HOWEVER CAUSED AND ON ANY THEORY OF LIABILITY, WHETHER IN CONTRACT, STRICT LIABILITY, OR TORT (INCLUDING NEGLIGENCE OR OTHERWISE) ARISING IN ANY WAY OUT OF THE USE OF THIS SOFTWARE, EVEN IF ADVISED OF THE POSSIBILITY OF SUCH DAMAGE.

---- Part 4: Sun Microsystems, Inc. copyright notice (BSD) -----

Copyright c 2003 Sun Microsystems, Inc., 4150 Network Circle, Santa Clara, California 95054, U.S.A. All rights reserved.

Use is subject to license terms below.

This distribution may include materials developed by third parties.

Sun, Sun Microsystems, the Sun logo and Solaris are trademarks or registered trademarks of Sun Microsystems, Inc. in the U.S. and other countries.

Redistribution and use in source and binary forms, with or without modification, are permitted provided that the following conditions are met:

* Redistributions of source code must retain the above copyright notice, this list of conditions and the following disclaimer.
* Redistributions in binary form must reproduce the above copyright notice, this list of conditions and the following disclaimer in the documentation and/or other materials provided with the distribution.
* Neither the name of the Sun Microsystems, Inc. nor the names of its contributors may be used to endorse or promote products derived from this software without specific prior written permission.

THIS SOFTWARE IS PROVIDED BY THE COPYRIGHT HOLDERS AND CONTRIBUTORS ``AS IS'' AND ANY EXPRESS OR IMPLIED WARRANTIES, INCLUDING, BUT NOT LIMITED TO, THE IMPLIED WARRANTIES OF MERCHANTABILITY AND FITNESS FOR A PARTICULAR PURPOSE ARE DISCLAIMED. IN NO EVENT SHALL THE COPYRIGHT HOLDERS OR CONTRIBUTORS BE LIABLE FOR ANY DIRECT, INDIRECT, INCIDENTAL, SPECIAL, EXEMPLARY, OR CONSEQUENTIAL DAMAGES (INCLUDING, BUT NOT LIMITED TO, PROCUREMENT OF SUBSTITUTE GOODS OR

SERVICES; LOSS OF USE, DATA, OR PROFITS; OR BUSINESS INTERRUPTION) HOWEVER CAUSED AND ON ANY THEORY OF LIABILITY, WHETHER IN CONTRACT, STRICT LIABILITY, OR TORT (INCLUDING NEGLIGENCE OR OTHERWISE) ARISING IN ANY WAY OUT OF THE USE OF THIS SOFTWARE, EVEN IF ADVISED OF THE POSSIBILITY OF SUCH DAMAGE.

---- Part 5: Sparta, Inc copyright notice (BSD) -----

Copyright (c) 2003-2012, Sparta, Inc

All rights reserved.

Redistribution and use in source and binary forms, with or without modification, are permitted provided that the following conditions are met:

* Redistributions of source code must retain the above copyright notice, this list of conditions and the following disclaimer.
* Redistributions in binary form must reproduce the above copyright notice, this list of conditions and the following disclaimer in the documentation and/or other materials provided with the distribution.
* Neither the name of Sparta, Inc nor the names of its contributors may be used to endorse or promote products derived from this software without specific prior written permission.

THIS SOFTWARE IS PROVIDED BY THE COPYRIGHT HOLDERS AND CONTRIBUTORS ``AS IS'' AND ANY EXPRESS OR IMPLIED WARRANTIES, INCLUDING, BUT NOT LIMITED TO, THE IMPLIED WARRANTIES OF MERCHANTABILITY AND FITNESS FOR A PARTICULAR PURPOSE ARE DISCLAIMED. IN NO EVENT SHALL THE COPYRIGHT HOLDERS OR CONTRIBUTORS BE LIABLE FOR ANY DIRECT, INDIRECT, INCIDENTAL, SPECIAL, EXEMPLARY, OR CONSEQUENTIAL DAMAGES (INCLUDING, BUT NOT LIMITED TO, PROCUREMENT OF SUBSTITUTE GOODS OR SERVICES; LOSS OF USE, DATA, OR PROFITS; OR BUSINESS INTERRUPTION) HOWEVER CAUSED AND ON ANY THEORY OF LIABILITY, WHETHER IN CONTRACT, STRICT LIABILITY, OR TORT (INCLUDING NEGLIGENCE OR OTHERWISE) ARISING IN ANY WAY OUT OF THE USE OF THIS SOFTWARE, EVEN IF ADVISED OF THE POSSIBILITY OF SUCH DAMAGE.

---- Part 6: Cisco/BUPTNIC copyright notice (BSD) -----

Copyright (c) 2004, Cisco, Inc and Information Network Center of Beijing University of Posts and Telecommunications.

All rights reserved.

Redistribution and use in source and binary forms, with or without modification, are permitted provided that the following conditions are met:

* Redistributions of source code must retain the above copyright notice, this list of conditions and the following disclaimer.
* Redistributions in binary form must reproduce the above copyright notice, this list of conditions and the following disclaimer in the documentation and/or other materials provided with the distribution.
* Neither the name of Cisco, Inc, Beijing University of Posts and Telecommunications, nor the names of their contributors may be used to endorse or promote products derived from this software without specific prior written permission.

THIS SOFTWARE IS PROVIDED BY THE COPYRIGHT HOLDERS AND CONTRIBUTORS ``AS IS'' AND ANY EXPRESS OR IMPLIED WARRANTIES, INCLUDING, BUT NOT LIMITED TO, THE IMPLIED WARRANTIES OF MERCHANTABILITY AND FITNESS FOR A PARTICULAR PURPOSE

ARE DISCLAIMED. IN NO EVENT SHALL THE COPYRIGHT HOLDERS OR CONTRIBUTORS BE LIABLE FOR ANY DIRECT, INDIRECT, INCIDENTAL, SPECIAL, EXEMPLARY, OR CONSEQUENTIAL DAMAGES (INCLUDING, BUT NOT LIMITED TO, PROCUREMENT OF SUBSTITUTE GOODS OR SERVICES; LOSS OF USE, DATA, OR PROFITS; OR BUSINESS INTERRUPTION) HOWEVER CAUSED AND ON ANY THEORY OF LIABILITY, WHETHER IN CONTRACT, STRICT LIABILITY, OR TORT (INCLUDING NEGLIGENCE OR OTHERWISE) ARISING IN ANY WAY OUT OF THE USE OF THIS SOFTWARE, EVEN IF ADVISED OF THE POSSIBILITY OF SUCH DAMAGE.

---- Part 7: Fabasoft R&D Software GmbH & Co KG copyright notice (BSD) -----

Copyright (c) Fabasoft R&D Software GmbH & Co KG, 2003 oss@fabasoft.com

Author: Bernhard Penz <bernhard.penz@fabasoft.com>

Redistribution and use in source and binary forms, with or without modification, are permitted provided that the following conditions are met:

* Redistributions of source code must retain the above copyright notice, this list of conditions and the following disclaimer.
* Redistributions in binary form must reproduce the above copyright notice, this list of conditions and the following disclaimer in the documentation and/or other materials provided with the distribution.
* The name of Fabasoft R&D Software GmbH & Co KG or any of its subsidiaries, brand or product names may not be used to endorse or promote products derived from this software without specific prior written permission.

THIS SOFTWARE IS PROVIDED BY THE COPYRIGHT HOLDER ``AS IS'' AND ANY EXPRESS OR IMPLIED WARRANTIES, INCLUDING, BUT NOT LIMITED TO, THE IMPLIED WARRANTIES OF MERCHANTABILITY AND FITNESS FOR A PARTICULAR PURPOSE ARE DISCLAIMED. IN NO EVENT SHALL THE COPYRIGHT HOLDER BE LIABLE FOR ANY DIRECT, INDIRECT, INCIDENTAL, SPECIAL, EXEMPLARY, OR CONSEQUENTIAL DAMAGES (INCLUDING, BUT NOT LIMITED TO, PROCUREMENT OF SUBSTITUTE GOODS OR SERVICES; LOSS OF USE, DATA, OR PROFITS; OR BUSINESS INTERRUPTION) HOWEVER CAUSED AND ON ANY THEORY OF LIABILITY, WHETHER IN CONTRACT, STRICT LIABILITY, OR TORT (INCLUDING NEGLIGENCE OR OTHERWISE) ARISING IN ANY WAY OUT OF THE USE OF THIS SOFTWARE, EVEN IF ADVISED OF THE POSSIBILITY OF SUCH DAMAGE.

---- Part 8: Apple Inc. copyright notice (BSD) -----

Copyright (c) 2007 Apple Inc. All rights reserved.

Redistribution and use in source and binary forms, with or without modification, are permitted provided that the following conditions are met:

1. Redistributions of source code must retain the above copyright notice, this list of conditions and the following disclaimer.
2. Redistributions in binary form must reproduce the above copyright notice, this list of conditions and the following disclaimer in the documentation and/or other materials provided with the distribution.
3. Neither the name of Apple Inc. ("Apple") nor the names of its contributors may be used to endorse or promote products derived from this software without specific prior written permission.

THIS SOFTWARE IS PROVIDED BY APPLE AND ITS CONTRIBUTORS "AS IS" AND ANY EXPRESS OR IMPLIED WARRANTIES, INCLUDING, BUT NOT LIMITED TO, THE IMPLIED WARRANTIES

OF MERCHANTABILITY AND FITNESS FOR A PARTICULAR PURPOSE ARE DISCLAIMED. IN NO EVENT SHALL APPLE OR ITS CONTRIBUTORS BE LIABLE FOR ANY DIRECT, INDIRECT, INCIDENTAL, SPECIAL, EXEMPLARY, OR CONSEQUENTIAL DAMAGES (INCLUDING, BUT NOT LIMITED TO, PROCUREMENT OF SUBSTITUTE GOODS OR SERVICES; LOSS OF USE, DATA, OR PROFITS; OR BUSINESS INTERRUPTION) HOWEVER CAUSED AND ON ANY THEORY OF LIABILITY, WHETHER IN CONTRACT, STRICT LIABILITY, OR TORT (INCLUDING NEGLIGENCE OR OTHERWISE) ARISING IN ANY WAY OUT OF THE USE OF THIS SOFTWARE, EVEN IF ADVISED OF THE POSSIBILITY OF SUCH DAMAGE.

---- Part 9: ScienceLogic, LLC copyright notice (BSD) -----

Copyright (c) 2009, ScienceLogic, LLC

All rights reserved.

Redistribution and use in source and binary forms, with or without modification, are permitted provided that the following conditions are met:

* Redistributions of source code must retain the above copyright notice, this list of conditions and the following disclaimer.
* Redistributions in binary form must reproduce the above copyright notice, this list of conditions and the following disclaimer in the documentation and/or other materials provided with the distribution.
* Neither the name of ScienceLogic, LLC nor the names of its contributors may be used to endorse or promote products derived from this software without specific prior written permission.

THIS SOFTWARE IS PROVIDED BY THE COPYRIGHT HOLDERS AND CONTRIBUTORS "AS IS" AND ANY EXPRESS OR IMPLIED WARRANTIES, INCLUDING, BUT NOT LIMITED TO, THE IMPLIED WARRANTIES OF MERCHANTABILITY AND FITNESS FOR A PARTICULAR PURPOSE ARE DISCLAIMED. IN NO EVENT SHALL THE COPYRIGHT HOLDERS OR CONTRIBUTORS BE LIABLE FOR ANY DIRECT, INDIRECT, INCIDENTAL, SPECIAL, EXEMPLARY, OR CONSEQUENTIAL DAMAGES (INCLUDING, BUT NOT LIMITED TO, PROCUREMENT OF SUBSTITUTE GOODS OR SERVICES; LOSS OF USE, DATA, OR PROFITS; OR BUSINESS INTERRUPTION) HOWEVER CAUSED AND ON ANY THEORY OF LIABILITY, WHETHER IN CONTRACT, STRICT LIABILITY, OR TORT (INCLUDING NEGLIGENCE OR OTHERWISE) ARISING IN ANY WAY OUT OF THE USE OF THIS SOFTWARE, EVEN IF ADVISED OF THE POSSIBILITY OF SUCH DAMAGE.

---- Part 10: Lennart Poettering copyright notice (BSD-like) -----

Copyright 2010 Lennart Poettering

Permission is hereby granted, free of charge, to any person
obtaining a copy of this software and associated documentation files
(the "Software"), to deal in the Software without restriction,
including without limitation the rights to use, copy, modify, merge,
publish, distribute, sublicense, and/or sell copies of the Software,
and to permit persons to whom the Software is furnished to do so,
subject to the following conditions:

The above copyright notice and this permission notice shall be
included in all copies or substantial portions of the Software.

THE SOFTWARE IS PROVIDED "AS IS", WITHOUT WARRANTY OF ANY KIND,
EXPRESS OR IMPLIED, INCLUDING BUT NOT LIMITED TO THE WARRANTIES OF
MERCHANTABILITY, FITNESS FOR A PARTICULAR PURPOSE AND
NONINFRINGEMENT. IN NO EVENT SHALL THE AUTHORS OR COPYRIGHT HOLDERS
BE LIABLE FOR ANY CLAIM, DAMAGES OR OTHER LIABILITY, WHETHER IN AN
ACTION OF CONTRACT, TORT OR OTHERWISE, ARISING FROM, OUT OF OR IN
CONNECTION WITH THE SOFTWARE OR THE USE OR OTHER DEALINGS IN THE
SOFTWARE.

---- Part 11: IETF copyright notice (BSD) -----

Copyright (c) 2013 IETF Trust and the persons identified as authors of
the code. All rights reserved.

Redistribution and use in source and binary forms, with or without
modification, are permitted provided that the following conditions are
met:

* Redistributions of source code must retain the above copyright notice,
this list of conditions and the following disclaimer.

* Redistributions in binary form must reproduce the above copyright
notice, this list of conditions and the following disclaimer in the
documentation and/or other materials provided with the distribution.

* Neither the name of Internet Society, IETF or IETF Trust, nor the
names of specific contributors, may be used to endorse or promote
products derived from this software without specific prior written
permission.

THIS SOFTWARE IS PROVIDED BY THE COPYRIGHT HOLDERS AND CONTRIBUTORS "AS
IS" AND ANY EXPRESS OR IMPLIED WARRANTIES, INCLUDING, BUT NOT LIMITED
TO, THE IMPLIED WARRANTIES OF MERCHANTABILITY AND FITNESS FOR A
PARTICULAR PURPOSE ARE DISCLAIMED. IN NO EVENT SHALL THE COPYRIGHT OWNER
OR CONTRIBUTORS BE LIABLE FOR ANY DIRECT, INDIRECT, INCIDENTAL, SPECIAL,
EXEMPLARY, OR CONSEQUENTIAL DAMAGES (INCLUDING, BUT NOT LIMITED TO,
PROCUREMENT OF SUBSTITUTE GOODS OR SERVICES; LOSS OF USE, DATA, OR
PROFITS; OR BUSINESS INTERRUPTION) HOWEVER CAUSED AND ON ANY THEORY OF
LIABILITY, WHETHER IN CONTRACT, STRICT LIABILITY, OR TORT (INCLUDING
NEGLIGENCE OR OTHERWISE) ARISING IN ANY WAY OUT OF THE USE OF THIS
SOFTWARE, EVEN IF ADVISED OF THE POSSIBILITY OF SUCH DAMAGE.

---- Part 12: Arista Networks copyright notice (BSD) ----

Copyright (c) 2013, Arista Networks, Inc.

All rights reserved.

Redistribution and use in source and binary forms, with or without
modification, are permitted provided that the following conditions are
met:

* Redistributions of source code must retain the above copyright notice,
this list of conditions and the following disclaimer.

* Redistributions in binary form must reproduce the above copyright
notice, this list of conditions and the following disclaimer in the
documentation and/or other materials provided with the distribution.

* Neither the name of Arista Networks, Inc. nor the names of its
contributors may be used to endorse or promote products derived
from this software without specific prior written permission.

THIS SOFTWARE IS PROVIDED BY THE COPYRIGHT HOLDERS AND CONTRIBUTORS
"AS IS" AND ANY EXPRESS OR IMPLIED WARRANTIES, INCLUDING, BUT NOT
LIMITED TO, THE IMPLIED WARRANTIES OF MERCHANTABILITY AND FITNESS FOR
A PARTICULAR PURPOSE ARE DISCLAIMED. IN NO EVENT SHALL THE COPYRIGHT
HOLDERS OR CONTRIBUTORS BE LIABLE FOR ANY DIRECT, INDIRECT,
INCIDENTAL, SPECIAL, EXEMPLARY, OR CONSEQUENTIAL DAMAGES (INCLUDING,
BUT NOT LIMITED TO, PROCUREMENT OF SUBSTITUTE GOODS OR SERVICES; LOSS
OF USE, DATA, OR PROFITS; OR BUSINESS INTERRUPTION) HOWEVER CAUSED AND
ON ANY THEORY OF LIABILITY, WHETHER IN CONTRACT, STRICT LIABILITY, OR
TORT (INCLUDING NEGLIGENCE OR OTHERWISE) ARISING IN ANY WAY OUT OF THE
USE OF THIS SOFTWARE, EVEN IF ADVISED OF THE POSSIBILITY OF SUCH
DAMAGE.

---- Part 13: VMware, Inc. copyright notice (BSD) -----

Copyright (c) 2016, VMware, Inc.

All rights reserved.

Redistribution and use in source and binary forms, with or without
modification, are permitted provided that the following conditions are met:

* Redistributions of source code must retain the above copyright notice,
this list of conditions and the following disclaimer.

* Redistributions in binary form must reproduce the above copyright
notice, this list of conditions and the following disclaimer in the
documentation and/or other materials provided with the distribution.

* Neither the name of VMware, Inc. nor the names of its contributors
may be used to endorse or promote products derived from this software
without specific prior written permission.

THIS SOFTWARE IS PROVIDED BY THE COPYRIGHT HOLDERS AND CONTRIBUTORS "AS
IS" AND ANY EXPRESS OR IMPLIED WARRANTIES, INCLUDING, BUT NOT LIMITED TO,
THE IMPLIED WARRANTIES OF MERCHANTABILITY AND FITNESS FOR A PARTICULAR
PURPOSE ARE DISCLAIMED. IN NO EVENT SHALL THE COPYRIGHT HOLDERS OR
CONTRIBUTORS BE LIABLE FOR ANY DIRECT, INDIRECT, INCIDENTAL, SPECIAL,
EXEMPLARY, OR CONSEQUENTIAL DAMAGES (INCLUDING, BUT NOT LIMITED TO,
PROCUREMENT OF SUBSTITUTE GOODS OR SERVICES; LOSS OF USE, DATA, OR PROFITS;
OR BUSINESS INTERRUPTION) HOWEVER CAUSED AND ON ANY THEORY OF LIABILITY,
WHETHER IN CONTRACT, STRICT LIABILITY, OR TORT (INCLUDING NEGLIGENCE OR
OTHERWISE) ARISING IN ANY WAY OUT OF THE USE OF THIS SOFTWARE, EVEN IF
ADVISED OF THE POSSIBILITY OF SUCH DAMAGE.

---- Part 14: USC/Information Sciences Institute copyright notice (BSD) -----

Copyright (c) 2017-2018, Information Sciences Institute

All rights reserved.

Redistribution and use in source and binary forms, with or without
modification, are permitted provided that the following conditions are met:

* Redistributions of source code must retain the above copyright notice,
this list of conditions and the following disclaimer.

* Redistributions in binary form must reproduce the above copyright
notice, this list of conditions and the following disclaimer in the
documentation and/or other materials provided with the distribution.

* Neither the name of Information Sciences Institue nor the names of its
contributors may be used to endorse or promote products derived from
this software without specific prior written permission.

THIS SOFTWARE IS PROVIDED BY THE COPYRIGHT HOLDERS AND CONTRIBUTORS "AS
IS" AND ANY EXPRESS OR IMPLIED WARRANTIES, INCLUDING, BUT NOT LIMITED TO,
THE IMPLIED WARRANTIES OF MERCHANTABILITY AND FITNESS FOR A PARTICULAR
PURPOSE ARE DISCLAIMED. IN NO EVENT SHALL THE COPYRIGHT HOLDERS OR
CONTRIBUTORS BE LIABLE FOR ANY DIRECT, INDIRECT, INCIDENTAL, SPECIAL,
EXEMPLARY, OR CONSEQUENTIAL DAMAGES (INCLUDING, BUT NOT LIMITED TO,

PROCUREMENT OF SUBSTITUTE GOODS OR SERVICES; LOSS OF USE, DATA, OR PROFITS; OR BUSINESS INTERRUPTION) HOWEVER CAUSED AND ON ANY THEORY OF LIABILITY, WHETHER IN CONTRACT, STRICT LIABILITY, OR TORT (INCLUDING NEGLIGENCE OR OTHERWISE) ARISING IN ANY WAY OUT OF THE USE OF THIS SOFTWARE, EVEN IF ADVISED OF THE POSSIBILITY OF SUCH DAMAGE.

MIT License

Copyright (c) 1998, 1999, 2000 Thai Open Source Software Center Ltd

Permission is hereby granted, free of charge, to any person obtaining a copy of this software and associated documentation files (the "Software"), to deal in the Software without restriction, including without limitation the rights to use, copy, modify, merge, publish, distribute, sublicense, and/or sell copies of the Software, and to permit persons to whom the Software is furnished to do so, subject to the following conditions:

The above copyright notice and this permission notice shall be included in all copies or substantial portions of the Software.

THE SOFTWARE IS PROVIDED "AS IS", WITHOUT WARRANTY OF ANY KIND, EXPRESS OR IMPLIED, INCLUDING BUT NOT LIMITED TO THE WARRANTIES OF MERCHANTABILITY, FITNESS FOR A PARTICULAR PURPOSE AND NONINFRINGEMENT. IN NO EVENT SHALL THE AUTHORS OR COPYRIGHT HOLDERS BE LIABLE FOR ANY CLAIM, DAMAGES OR OTHER LIABILITY, WHETHER IN AN ACTION OF CONTRACT, TORT OR OTHERWISE, ARISING FROM, OUT OF OR IN CONNECTION WITH THE SOFTWARE OR THE USE OR OTHER DEALINGS IN THE SOFTWARE.

Copyright 2000 Computing Research Labs, New Mexico State University

Copyright 2001-2015 Francesco Zappa Nardelli

Permission is hereby granted, free of charge, to any person obtaining a copy of this software and associated documentation files (the "Software"), to deal in the Software without restriction, including without limitation the rights to use, copy, modify, merge, publish, distribute, sublicense, and/or sell copies of the Software, and to permit persons to whom the Software is furnished to do so, subject to the following conditions:

The above copyright notice and this permission notice shall be included in all copies or substantial portions of the Software.

THE SOFTWARE IS PROVIDED "AS IS", WITHOUT WARRANTY OF ANY KIND, EXPRESS OR IMPLIED, INCLUDING BUT NOT LIMITED TO THE WARRANTIES OF MERCHANTABILITY, FITNESS FOR A PARTICULAR PURPOSE AND NONINFRINGEMENT. IN NO EVENT SHALL THE COMPUTING RESEARCH LAB OR NEW MEXICO STATE UNIVERSITY BE LIABLE FOR ANY CLAIM, DAMAGES OR OTHER LIABILITY, WHETHER IN AN ACTION OF CONTRACT, TORT OR OTHERWISE, ARISING FROM, OUT OF OR IN CONNECTION WITH THE SOFTWARE OR THE USE OR OTHER DEALINGS IN THE SOFTWARE.

Written by Joel Sherrill <joel@OARcorp.com>.

COPYRIGHT (c) 1989-2000.

On-Line Applications Research Corporation (OAR).

Permission to use, copy, modify, and distribute this software for any purpose without fee is hereby granted, provided that this entire notice is included in all copies of any software which is or includes a copy or modification of this software.

THIS SOFTWARE IS BEING PROVIDED "AS IS", WITHOUT ANY EXPRESS OR IMPLIED WARRANTY. IN PARTICULAR, THE AUTHOR MAKES NO REPRESENTATION OR WARRANTY OF ANY KIND CONCERNING THE MERCHANTABILITY OF THIS SOFTWARE OR ITS FITNESS FOR ANY PARTICULAR PURPOSE.

(1) Red Hat Incorporated

Copyright (c) 1994-2009 Red Hat, Inc. All rights reserved.

This copyrighted material is made available to anyone wishing to use, modify, copy, or redistribute it subject to the terms and conditions of the BSD License. This program is distributed in the hope that it will be useful, but WITHOUT ANY WARRANTY expressed or implied, including the implied warranties of MERCHANTABILITY or FITNESS FOR A PARTICULAR PURPOSE. A copy of this license is available at http://www.opensource.org/licenses. Any Red Hat trademarks that are incorporated in the source code or documentation are not subject to the BSD License and may only be used or replicated with the express permission of Red Hat, Inc.

(2) University of California, Berkeley

Copyright (c) 1981-2000 The Regents of the University of California.

All rights reserved.

Redistribution and use in source and binary forms, with or without modification, are permitted provided that the following conditions are met:

* Redistributions of source code must retain the above copyright notice, this list of conditions and the following disclaimer.
* Redistributions in binary form must reproduce the above copyright notice, this list of conditions and the following disclaimer in the documentation and/or other materials provided with the distribution.
* Neither the name of the University nor the names of its contributors may be used to endorse or promote products derived from this software without specific prior written permission.

THIS SOFTWARE IS PROVIDED BY THE COPYRIGHT HOLDERS AND CONTRIBUTORS "AS IS" AND ANY EXPRESS OR IMPLIED WARRANTIES, INCLUDING, BUT NOT LIMITED TO, THE IMPLIED WARRANTIES OF MERCHANTABILITY AND FITNESS FOR A PARTICULAR PURPOSE ARE DISCLAIMED. IN NO EVENT SHALL THE COPYRIGHT OWNER OR CONTRIBUTORS BE LIABLE FOR ANY DIRECT, INDIRECT, INCIDENTAL, SPECIAL, EXEMPLARY, OR CONSEQUENTIAL DAMAGES (INCLUDING, BUT NOT LIMITED TO, PROCUREMENT OF SUBSTITUTE GOODS OR SERVICES; LOSS OF USE, DATA, OR PROFITS; OR BUSINESS INTERRUPTION) HOWEVER CAUSED AND ON ANY THEORY OF LIABILITY, WHETHER IN CONTRACT, STRICT LIABILITY, OR TORT (INCLUDING NEGLIGENCE OR OTHERWISE) ARISING IN ANY WAY OUT OF THE USE OF THIS SOFTWARE, EVEN IF ADVISED OF THE POSSIBILITY OF SUCH DAMAGE.

The FreeType Project LICENSE

2006-Jan-27

Copyright 1996-2002, 2006 by

David Turner, Robert Wilhelm, and Werner Lemberg

Introduction

============

The FreeType Project is distributed in several archive packages; some of them may contain, in addition to the FreeType font engine, various tools and contributions which rely on, or relate to, the FreeType Project.

This license applies to all files found in such packages, and which do not fall under their own explicit license. The license affects thus the FreeType font engine, the test programs, documentation and makefiles, at the very least.

This license was inspired by the BSD, Artistic, and IJG (Independent JPEG Group) licenses, which all encourage inclusion and use of free software in commercial and freeware products alike. As a consequence, its main points are that:

o We don't promise that this software works. However, we will be interested in any kind of bug reports. (`as is' distribution)

o You can use this software for whatever you want, in parts or full form, without having to pay us. (`royalty-free' usage)

o You may not pretend that you wrote this software. If you use it, or only parts of it, in a program, you must acknowledge somewhere in your documentation that you have used the FreeType code. (`credits')

We specifically permit and encourage the inclusion of this software, with or without modifications, in commercial products.

We disclaim all warranties covering The FreeType Project and assume no liability related to The FreeType Project.

Finally, many people asked us for a preferred form for a credit/disclaimer to use in compliance with this license. We thus encourage you to use the following text:

"""

Portions of this software are copyright © <year> The FreeType

Project (www.freetype.org). All rights reserved.

"""

Please replace <year> with the value from the FreeType version you actually use.

Legal Terms

===========

0. Definitions

Throughout this license, the terms `package', `FreeType Project', and `FreeType archive' refer to the set of files originally distributed by the authors (David Turner, Robert Wilhelm, and Werner Lemberg) as the `FreeType Project', be they named as alpha, beta or final release.

`You' refers to the licensee, or person using the project, where `using' is a generic term including compiling the project's source code as well as linking it to form a `program' or `executable'.

This program is referred to as `a program using the FreeType engine'.

This license applies to all files distributed in the original FreeType Project, including all source code, binaries and documentation, unless otherwise stated in the file in its original, unmodified form as distributed in the original archive.

If you are unsure whether or not a particular file is covered by this license, you must contact us to verify this.

The FreeType Project is copyright (C) 1996-2000 by David Turner, Robert Wilhelm, and Werner Lemberg. All rights reserved except as specified below.

1. No Warranty

THE FREETYPE PROJECT IS PROVIDED `AS IS' WITHOUT WARRANTY OF ANY KIND, EITHER EXPRESS OR IMPLIED, INCLUDING, BUT NOT LIMITED TO, WARRANTIES OF MERCHANTABILITY AND FITNESS FOR A PARTICULAR PURPOSE. IN NO EVENT WILL ANY OF THE AUTHORS OR COPYRIGHT HOLDERS BE LIABLE FOR ANY DAMAGES CAUSED BY THE USE OR THE INABILITY TO USE, OF THE FREETYPE PROJECT.

2. Redistribution

This license grants a worldwide, royalty-free, perpetual and irrevocable right and license to use, execute, perform, compile, display, copy, create derivative works of, distribute and sublicense the FreeType Project (in both source and object code forms) and derivative works thereof for any purpose; and to authorize others to exercise some or all of the rights granted herein, subject to the following conditions:

o Redistribution of source code must retain this license file (`FTL.TXT') unaltered; any additions, deletions or changes to the original files must be clearly indicated in accompanying documentation. The copyright notices of the unaltered, original files must be preserved in all copies of source files.

o Redistribution in binary form must provide a disclaimer that states that the software is based in part of the work of the FreeType Team, in the distribution documentation. We also encourage you to put an URL to the FreeType web page in your documentation, though this isn't mandatory.

These conditions apply to any software derived from or based on the FreeType Project, not just the unmodified files. If you use our work, you must acknowledge us. However, no fee need be paid to us.

3. Advertising

Neither the FreeType authors and contributors nor you shall use the name of the other for commercial, advertising, or promotional purposes without specific prior written permission.

We suggest, but do not require, that you use one or more of the following phrases to refer to this software in your documentation or advertising materials: `FreeType Project', `FreeType Engine', `FreeType library', or `FreeType Distribution'.

As you have not signed this license, you are not required to accept it. However, as the FreeType Project is copyrighted material, only this license, or another one contracted with the authors, grants you the right to use, distribute, and modify it.

Therefore, by using, distributing, or modifying the FreeType Project, you indicate that you understand and accept all the terms of this license.

4. Contacts

There are two mailing lists related to FreeType:

o freetype@nongnu.org

Discusses general use and applications of FreeType, as well as future and wanted additions to the library and distribution.

If you are looking for support, start in this list if you haven't found anything to help you in the documentation.

o freetype-devel@nongnu.org

Discusses bugs, as well as engine internals, design issues, specific licenses, porting, etc.

Our home page can be found at

http://www.freetype.org

--- end of FTL.TXT ---

The TWAIN Toolkit is distributed as is. The developer and distributors of the TWAIN Toolkit expressly disclaim all implied, express or statutory warranties including, without limitation, the implied warranties of merchantability, noninfringement of third party rights and fitness for a particular purpose. Neither the developers nor the distributors will be liable for damages, whether direct, indirect, special, incidental, or consequential, as a result of the reproduction, modification, distribution or other use of the TWAIN Toolkit.

JSON for Modern C++

Copyright (c) 2013-2017 Niels Lohmann

Permission is hereby granted, free of charge, to any person obtaining a copy of this software and associated documentation files (the "Software"), to deal in the Software without restriction, including without limitation the rights to use, copy, modify, merge, publish, distribute, sublicense, and/or sell copies of the Software, and to permit persons to whom the Software is furnished to do so, subject to the following conditions:

The above copyright notice and this permission notice shall be included in all copies or substantial portions of the Software.

THE SOFTWARE IS PROVIDED "AS IS", WITHOUT WARRANTY OF ANY KIND, EXPRESS OR IMPLIED, INCLUDING BUT NOT LIMITED TO THE WARRANTIES OF MERCHANTABILITY, FITNESS FOR A PARTICULAR PURPOSE AND NONINFRINGEMENT. IN NO EVENT SHALL THE AUTHORS OR COPYRIGHT HOLDERS BE LIABLE FOR ANY CLAIM, DAMAGES OR OTHER LIABILITY, WHETHER IN AN ACTION OF CONTRACT, TORT OR OTHERWISE, ARISING FROM, OUT OF OR IN CONNECTION WITH THE SOFTWARE OR THE USE OR OTHER DEALINGS IN THE SOFTWARE.

Copyright (c) 2011 - 2015 ARM LIMITED

All rights reserved.

Redistribution and use in source and binary forms, with or without modification, are permitted provided that the following conditions are met:

- Redistributions of source code must retain the above copyright notice, this list of conditions and the following disclaimer.

- Redistributions in binary form must reproduce the above copyright notice, this list of conditions and the following disclaimer in the documentation and/or other materials provided with the distribution.
- Neither the name of ARM nor the names of its contributors may be used to endorse or promote products derived from this software without specific prior written permission.

THIS SOFTWARE IS PROVIDED BY THE COPYRIGHT HOLDERS AND CONTRIBUTORS "AS IS" AND ANY EXPRESS OR IMPLIED WARRANTIES, INCLUDING, BUT NOT LIMITED TO, THE IMPLIED WARRANTIES OF MERCHANTABILITY AND FITNESS FOR A PARTICULAR PURPOSE ARE DISCLAIMED. IN NO EVENT SHALL COPYRIGHT HOLDERS AND CONTRIBUTORS BE LIABLE FOR ANY DIRECT, INDIRECT, INCIDENTAL, SPECIAL, EXEMPLARY, OR CONSEQUENTIAL DAMAGES (INCLUDING, BUT NOT LIMITED TO, PROCUREMENT OF SUBSTITUTE GOODS OR SERVICES; LOSS OF USE, DATA, OR PROFITS; OR BUSINESS INTERRUPTION) HOWEVER CAUSED AND ON ANY THEORY OF LIABILITY, WHETHER IN CONTRACT, STRICT LIABILITY, OR TORT (INCLUDING NEGLIGENCE OR OTHERWISE) ARISING IN ANY WAY OUT OF THE USE OF THIS SOFTWARE, EVEN IF ADVISED OF THE POSSIBILITY OF SUCH DAMAGE.

Copyright (c) 2014, Kenneth MacKay

All rights reserved.

Redistribution and use in source and binary forms, with or without modification, are permitted provided that the following conditions are met:

* Redistributions of source code must retain the above copyright notice, this list of conditions and the following disclaimer.
* Redistributions in binary form must reproduce the above copyright notice, this list of conditions and the following disclaimer in the documentation and/or other materials provided with the distribution.

THIS SOFTWARE IS PROVIDED BY THE COPYRIGHT HOLDERS AND CONTRIBUTORS "AS IS" AND ANY EXPRESS OR IMPLIED WARRANTIES, INCLUDING, BUT NOT LIMITED TO, THE IMPLIED WARRANTIES OF MERCHANTABILITY AND FITNESS FOR A PARTICULAR PURPOSE ARE DISCLAIMED. IN NO EVENT SHALL THE COPYRIGHT HOLDER OR CONTRIBUTORS BE LIABLE FOR ANY DIRECT, INDIRECT, INCIDENTAL, SPECIAL, EXEMPLARY, OR CONSEQUENTIAL DAMAGES (INCLUDING, BUT NOT LIMITED TO, PROCUREMENT OF SUBSTITUTE GOODS OR SERVICES; LOSS OF USE, DATA, OR PROFITS; OR BUSINESS INTERRUPTION) HOWEVER CAUSED AND ON ANY THEORY OF LIABILITY, WHETHER IN CONTRACT, STRICT LIABILITY, OR TORT (INCLUDING NEGLIGENCE OR OTHERWISE) ARISING IN ANY WAY OUT OF THE USE OF THIS SOFTWARE, EVEN IF ADVISED OF THE POSSIBILITY OF SUCH DAMAGE.

Copyright (c) 2006, CRYPTOGAMS by <appro@openssl.org> All rights reserved.

Redistribution and use in source and binary forms, with or without modification, are permitted provided that the following conditions are met:

* Redistributions of source code must retain copyright notices, this list of conditions and the following disclaimer.
* Redistributions in binary form must reproduce the above copyright notice, this list of conditions and the following disclaimer in the documentation and/or other materials provided with the distribution.
* Neither the name of the CRYPTOGAMS nor the names of its copyright holder and contributors may be used to endorse or promote products derived from this software without specific prior written permission.

ALTERNATIVELY, provided that this notice is retained in full, this product may be distributed under the terms of the GNU General Public License (GPL), in which case the provisions of the GPL apply INSTEAD OF those given above.

THIS SOFTWARE IS PROVIDED BY THE COPYRIGHT HOLDER AND CONTRIBUTORS "AS IS" AND ANY EXPRESS OR IMPLIED WARRANTIES, INCLUDING, BUT NOT LIMITED TO, THE IMPLIED WARRANTIES OF MERCHANTABILITY AND FITNESS FOR A PARTICULAR PURPOSE ARE DISCLAIMED. IN NO EVENT SHALL THE COPYRIGHT OWNER OR CONTRIBUTORS BE LIABLE FOR ANY DIRECT, INDIRECT, INCIDENTAL, SPECIAL, EXEMPLARY, OR CONSEQUENTIAL DAMAGES (INCLUDING, BUT NOT LIMITED TO, PROCUREMENT OF SUBSTITUTE GOODS OR SERVICES; LOSS OF USE, DATA, OR PROFITS; OR BUSINESS INTERRUPTION) HOWEVER CAUSED AND ON ANY THEORY OF LIABILITY, WHETHER IN CONTRACT, STRICT LIABILITY, OR TORT (INCLUDING NEGLIGENCE OR OTHERWISE) ARISING IN ANY WAY OUT OF THE USE OF THIS SOFTWARE, EVEN IF ADVISED OF THE POSSIBILITY OF SUCH DAMAGE.

ISC License

Copyright (c) 2013-2017

Frank Denis <j at pureftpd dot org>

Permission to use, copy, modify, and/or distribute this software for any purpose with or without fee is hereby granted, provided that the above copyright notice and this permission notice appear in all copies.

THE SOFTWARE IS PROVIDED "AS IS" AND THE AUTHOR DISCLAIMS ALL WARRANTIES WITH REGARD TO THIS SOFTWARE INCLUDING ALL IMPLIED WARRANTIES OF MERCHANTABILITY AND FITNESS. IN NO EVENT SHALL THE AUTHOR BE LIABLE FOR ANY SPECIAL, DIRECT, INDIRECT, OR CONSEQUENTIAL DAMAGES OR ANY DAMAGES WHATSOEVER RESULTING FROM LOSS OF USE, DATA OR PROFITS, WHETHER IN AN ACTION OF CONTRACT, NEGLIGENCE OR OTHER TORTIOUS ACTION, ARISING OUT OF OR IN CONNECTION WITH THE USE OR PERFORMANCE OF THIS SOFTWARE.

Copyright (c) 2008 The NetBSD Foundation, Inc.

All rights reserved.

This code is derived from software contributed to The NetBSD Foundation
by Lennart Augustsson (lennart@augustsson.net) at
Carlstedt Research & Technology.

Redistribution and use in source and binary forms, with or without
modification, are permitted provided that the following conditions
are met:

1. Redistributions of source code must retain the above copyright
   notice, this list of conditions and the following disclaimer.
2. Redistributions in binary form must reproduce the above copyright
   notice, this list of conditions and the following disclaimer in the
   documentation and/or other materials provided with the distribution.

THIS SOFTWARE IS PROVIDED BY THE NETBSD FOUNDATION, INC. AND CONTRIBUTORS
"AS IS" AND ANY EXPRESS OR IMPLIED WARRANTIES, INCLUDING, BUT NOT LIMITED
TO, THE IMPLIED WARRANTIES OF MERCHANTABILITY AND FITNESS FOR A PARTICULAR

PURPOSE ARE DISCLAIMED. IN NO EVENT SHALL THE FOUNDATION OR CONTRIBUTORS BE LIABLE FOR ANY DIRECT, INDIRECT, INCIDENTAL, SPECIAL, EXEMPLARY, OR CONSEQUENTIAL DAMAGES (INCLUDING, BUT NOT LIMITED TO, PROCUREMENT OF SUBSTITUTE GOODS OR SERVICES; LOSS OF USE, DATA, OR PROFITS; OR BUSINESS INTERRUPTION) HOWEVER CAUSED AND ON ANY THEORY OF LIABILITY, WHETHER IN CONTRACT, STRICT LIABILITY, OR TORT (INCLUDING NEGLIGENCE OR OTHERWISE) ARISING IN ANY WAY OUT OF THE USE OF THIS SOFTWARE, EVEN IF ADVISED OF THE POSSIBILITY OF SUCH DAMAGE.

Copyright (c) 2000 Intel Corporation

All rights reserved.

Redistribution and use in source and binary forms, with or without
modification, are permitted provided that the following conditions are met:

* Redistributions of source code must retain the above copyright notice,
this list of conditions and the following disclaimer.
* Redistributions in binary form must reproduce the above copyright notice,
this list of conditions and the following disclaimer in the documentation
and/or other materials provided with the distribution.
* Neither name of Intel Corporation nor the names of its contributors
may be used to endorse or promote products derived from this software
without specific prior written permission.

THIS SOFTWARE IS PROVIDED BY THE COPYRIGHT HOLDERS AND CONTRIBUTORS
"AS IS" AND ANY EXPRESS OR IMPLIED WARRANTIES, INCLUDING, BUT NOT
LIMITED TO, THE IMPLIED WARRANTIES OF MERCHANTABILITY AND FITNESS FOR
A PARTICULAR PURPOSE ARE DISCLAIMED. IN NO EVENT SHALL INTEL OR
CONTRIBUTORS BE LIABLE FOR ANY DIRECT, INDIRECT, INCIDENTAL, SPECIAL,
EXEMPLARY, OR CONSEQUENTIAL DAMAGES (INCLUDING, BUT NOT LIMITED TO,
PROCUREMENT OF SUBSTITUTE GOODS OR SERVICES; LOSS OF USE, DATA, OR
PROFITS; OR BUSINESS INTERRUPTION) HOWEVER CAUSED AND ON ANY THEORY
OF LIABILITY, WHETHER IN CONTRACT, STRICT LIABILITY, OR TORT (INCLUDING
NEGLIGENCE OR OTHERWISE) ARISING IN ANY WAY OUT OF THE USE OF THIS
SOFTWARE, EVEN IF ADVISED OF THE POSSIBILITY OF SUCH DAMAGE.

Lua

Copyright © 1994–2014 Lua.org, PUC-Rio.

Permission is hereby granted, free of charge, to any person obtaining a copy of this software and associated
documentation files (the "Software"), to deal in the Software without restriction, including without limitation the
rights to use, copy, modify, merge, publish, distribute, sublicense, and/or sell copies of the Software, and to
permit persons to whom the Software is furnished to do so, subject to the following conditions:

The above copyright notice and this permission notice shall be included in all copies or substantial portions of
the Software.

THE SOFTWARE IS PROVIDED "AS IS", WITHOUT WARRANTY OF ANY KIND, EXPRESS OR IMPLIED,
INCLUDING BUT NOT LIMITED TO THE WARRANTIES OF MERCHANTABILITY, FITNESS FOR A PARTICULAR PURPOSE AND NONINFRINGEMENT. IN NO EVENT SHALL THE AUTHORS OR COPYRIGHT HOLDERS BE LIABLE FOR ANY CLAIM, DAMAGES OR OTHER LIABILITY, WHETHER IN AN
ACTION OF CONTRACT, TORT OR OTHERWISE, ARISING FROM, OUT OF OR IN CONNECTION WITH
THE SOFTWARE OR THE USE OR OTHER DEALINGS IN THE SOFTWARE.

LuaSocket

LuaSocket 2.0.2 license
Copyright © 2004-2007 Diego Nehab

Permission is hereby granted, free of charge, to any person obtaining a copy of this software and associated documentation files (the "Software"), to deal in the Software without restriction, including without limitation the rights to use, copy, modify, merge, publish, distribute, sublicense, and/or sell copies of the Software, and to permit persons to whom the Software is furnished to do so, subject to the following conditions:

The above copyright notice and this permission notice shall be included in all copies or substantial portions of the Software.

THE SOFTWARE IS PROVIDED "AS IS", WITHOUT WARRANTY OF ANY KIND, EXPRESS OR IMPLIED, INCLUDING BUT NOT LIMITED TO THE WARRANTIES OF MERCHANTABILITY, FITNESS FOR A PARTICULAR PURPOSE AND NONINFRINGEMENT. IN NO EVENT SHALL THE AUTHORS OR COPYRIGHT HOLDERS BE LIABLE FOR ANY CLAIM, DAMAGES OR OTHER LIABILITY, WHETHER IN AN ACTION OF CONTRACT, TORT OR OTHERWISE, ARISING FROM, OUT OF OR IN CONNECTION WITH THE SOFTWARE OR THE USE OR OTHER DEALINGS IN THE SOFTWARE.

LuneScript

Copyright (c) 2018 ifritJP

Permission is hereby granted, free of charge, to any person obtaining a copy of this software and associated documentation files (the "Software"), to deal in the Software without restriction, including without limitation the rights to use, copy, modify, merge, publish, distribute, sublicense, and/or sell copies of the Software, and to permit persons to whom the Software is furnished to do so, subject to the following conditions:

The above copyright notice and this permission notice shall be included in all copies or substantial portions of the Software.

THE SOFTWARE IS PROVIDED "AS IS", WITHOUT WARRANTY OF ANY KIND, EXPRESS OR IMPLIED, INCLUDING BUT NOT LIMITED TO THE WARRANTIES OF MERCHANTABILITY, FITNESS FOR A PARTICULAR PURPOSE AND NONINFRINGEMENT. IN NO EVENT SHALL THE AUTHORS OR COPYRIGHT HOLDERS BE LIABLE FOR ANY CLAIM, DAMAGES OR OTHER LIABILITY, WHETHER IN AN ACTION OF CONTRACT, TORT OR OTHERWISE, ARISING FROM, OUT OF OR IN CONNECTION WITH THE SOFTWARE OR THE USE OR OTHER DEALINGS IN THE SOFTWARE.

Copyright (c) 2002-2019, Jouni Malinen <j@w1.fi> and contributors
All Rights Reserved.

This software may be distributed, used, and modified under the terms of BSD license:

Redistribution and use in source and binary forms, with or without modification, are permitted provided that the following conditions are met:

1. Redistributions of source code must retain the above copyright notice, this list of conditions and the following disclaimer.
2. Redistributions in binary form must reproduce the above copyright notice, this list of conditions and the following disclaimer in the documentation and/or other materials provided with the distribution.
3. Neither the name(s) of the above-listed copyright holder(s) nor the names of its contributors may be used to endorse or promote products derived from this software without specific prior written permission.

THIS SOFTWARE IS PROVIDED BY THE COPYRIGHT HOLDERS AND CONTRIBUTORS "AS IS" AND ANY EXPRESS OR IMPLIED WARRANTIES, INCLUDING, BUT NOT LIMITED TO, THE IMPLIED WARRANTIES OF MERCHANTABILITY AND FITNESS FOR A PARTICULAR PURPOSE ARE DISCLAIMED. IN NO EVENT SHALL THE COPYRIGHT OWNER OR CONTRIBUTORS BE LIABLE FOR ANY DIRECT, INDIRECT, INCIDENTAL, SPECIAL, EXEMPLARY, OR CONSEQUENTIAL DAMAGES (INCLUDING, BUT NOT LIMITED TO, PROCUREMENT OF SUBSTITUTE GOODS OR SERVICES; LOSS OF USE, DATA, OR PROFITS; OR BUSINESS INTERRUPTION) HOWEVER CAUSED AND ON ANY THEORY OF LIABILITY, WHETHER IN CONTRACT, STRICT LIABILITY, OR TORT (INCLUDING NEGLIGENCE OR OTHERWISE) ARISING IN ANY WAY OUT OF THE USE OF THIS SOFTWARE, EVEN IF ADVISED OF THE POSSIBILITY OF SUCH DAMAGE.

Copyright (C) 2019, Broadcom Corporation. All Rights Reserved.

Permission to use, copy, modify, and/or distribute this software for any purpose with or without fee is hereby granted, provided that the above copyright notice and this permission notice appear in all copies.

THE SOFTWARE IS PROVIDED "AS IS" AND THE AUTHOR DISCLAIMS ALL WARRANTIES WITH REGARD TO THIS SOFTWARE INCLUDING ALL IMPLIED WARRANTIES OF MERCHANTABILITY AND FITNESS. IN NO EVENT SHALL THE AUTHOR BE LIABLE FOR ANY SPECIAL, DIRECT, INDIRECT, OR CONSEQUENTIAL DAMAGES OR ANY DAMAGES WHATSOEVER RESULTING FROM LOSS OF USE, DATA OR PROFITS, WHETHER IN AN ACTION OF CONTRACT, NEGLIGENCE OR OTHER TORTIOUS ACTION, ARISING OUT OF OR IN CONNECTION WITH THE USE OR PERFORMANCE OF THIS SOFTWARE.

The certificate files "Amazon Root CA 1", "Amazon Root CA 2", "Amazon Root CA 4" are licensed under a Creative Commons Attribution-NoDerivatives 4.0 International License.

This software is licensed under the MIT License.

Copyright Fedor Indutny, 2018.

Permission is hereby granted, free of charge, to any person obtaining a copy of this software and associated documentation files (the "Software"), to deal in the Software without restriction, including without limitation the rights to use, copy, modify, merge, publish, distribute, sublicense, and/or sell copies of the Software, and to permit persons to whom the Software is furnished to do so, subject to the following conditions:

The above copyright notice and this permission notice shall be included in all copies or substantial portions of the Software.

THE SOFTWARE IS PROVIDED "AS IS", WITHOUT WARRANTY OF ANY KIND, EXPRESS OR IMPLIED, INCLUDING BUT NOT LIMITED TO THE WARRANTIES OF MERCHANTABILITY, FITNESS FOR A PARTICULAR PURPOSE AND NONINFRINGEMENT. IN NO EVENT SHALL THE AUTHORS OR COPYRIGHT HOLDERS BE LIABLE FOR ANY CLAIM, DAMAGES OR OTHER LIABILITY, WHETHER IN AN ACTION OF CONTRACT, TORT OR OTHERWISE, ARISING FROM, OUT OF OR IN CONNECTION WITH THE SOFTWARE OR THE USE OR OTHER DEALINGS IN THE SOFTWARE.

The following applies only to products supporting Wi-Fi.

(c) 2009-2013 by Jeff Mott. All rights reserved.

Redistribution and use in source and binary forms, with or without modification, are permitted provided that the following conditions are met:

* Redistributions of source code must retain the above copyright notice, this list of conditions, and the following disclaimer.
* Redistributions in binary form must reproduce the above copyright notice, this list of conditions, and the following disclaimer in the documentation or other materials provided with the distribution.
* Neither the name CryptoJS nor the names of its contributors may be used to endorse or promote products derived from this software without specific prior written permission.

THIS SOFTWARE IS PROVIDED BY THE COPYRIGHT HOLDERS AND CONTRIBUTORS "AS IS," AND ANY EXPRESS OR IMPLIED WARRANTIES, INCLUDING, BUT NOT LIMITED TO, THE IMPLIED WARRANTIES OF MERCHANTABILITY AND FITNESS FOR A PARTICULAR PURPOSE,

ARE DISCLAIMED. IN NO EVENT SHALL THE COPYRIGHT HOLDER OR CONTRIBUTORS BE LIABLE FOR ANY DIRECT, INDIRECT, INCIDENTAL, SPECIAL, EXEMPLARY, OR CONSEQUENTIAL DAMAGES (INCLUDING, BUT NOT LIMITED TO, PROCUREMENT OF SUBSTITUTE GOODS OR SERVICES; LOSS OF USE, DATA, OR PROFITS; OR BUSINESS INTERRUPTION) HOWEVER CAUSED AND ON ANY THEORY OF LIABILITY, WHETHER IN CONTRACT, STRICT LIABILITY, OR TORT (INCLUDING NEGLIGENCE OR OTHERWISE) ARISING IN ANY WAY OUT OF THE USE OF THIS SOFTWARE, EVEN IF ADVISED OF THE POSSIBILITY OF SUCH DAMAGE.

Copyright 2008, Google Inc.

All rights reserved.

Redistribution and use in source and binary forms, with or without modification, are permitted provided that the following conditions are met:

* Redistributions of source code must retain the above copyright notice, this list of conditions and the following disclaimer.
* Redistributions in binary form must reproduce the above copyright notice, this list of conditions and the following disclaimer in the documentation and/or other materials provided with the distribution.
* Neither the name of Google Inc. nor the names of its contributors may be used to endorse or promote products derived from this software without specific prior written permission.

THIS SOFTWARE IS PROVIDED BY THE COPYRIGHT HOLDERS AND CONTRIBUTORS AS IS AND ANY EXPRESS OR IMPLIED WARRANTIES, INCLUDING, BUT NOT LIMITED TO, THE IMPLIED WARRANTIES OF MERCHANTABILITY AND FITNESS FOR A PARTICULAR PURPOSE ARE DISCLAIMED. IN NO EVENT SHALL THE COPYRIGHT OWNER OR CONTRIBUTORS BE LIABLE FOR ANY DIRECT, INDIRECT, INCIDENTAL, SPECIAL, EXEMPLARY, OR CONSEQUENTIAL DAMAGES (INCLUDING, BUT NOT LIMITED TO, PROCUREMENT OF SUBSTITUTE GOODS OR SERVICES; LOSS OF USE, DATA, OR PROFITS; OR BUSINESS INTERRUPTION) HOWEVER CAUSED AND ON ANY THEORY OF LIABILITY, WHETHER IN CONTRACT, STRICT LIABILITY, OR TORT (INCLUDING NEGLIGENCE OR OTHERWISE) ARISING IN ANY WAY OUT OF THE USE OF THIS SOFTWARE, EVEN IF ADVISED OF THE POSSIBILITY OF SUCH DAMAGE.

Copyright (c) 1998-2010, Brian Gladman, Worcester, UK. All rights reserved.

The redistribution and use of this software (with or without changes) is allowed without the payment of fees or royalties provided that:
source code distributions include the above copyright notice, this list of conditions and the following disclaimer;
binary distributions include the above copyright notice, this list of conditions and the following disclaimer in their documentation.

This software is provided 'as is' with no explicit or implied warranties in respect of its operation, including, but not limited to, correctness and fitness for purpose.

Disclaimer: IMPORTANT: This Apple software is supplied to you, by Apple Inc. ("Apple"), in your capacity as a current, and in good standing, Licensee in the MFi Licensing Program. Use of this Apple software is governed by and subject to the terms and conditions of your MFi License, including, but not limited to, the restrictions specified in the provision entitled "Public Software", and is further subject to your agreement to the following additional terms, and your agreement that the use, installation, modification or redistribution of this Apple software constitutes acceptance of these additional terms. If you do not agree with these additional terms, please do not use, install, modify or redistribute this Apple software.

Subject to all of these terms and in consideration of your agreement to abide by them, Apple grants you, for as long as you are a current and in good-standing MFi Licensee, a personal, non-exclusive license, under Apple's copyrights in this original Apple software (the "Apple Software"), to use, reproduce, and modify the Apple Software in source form, and to use, reproduce, modify, and redistribute the Apple Software, with or without modifications, in binary form. While you may not redistribute the Apple Software in source form, should you redistribute the Apple Software in binary form, you must retain this notice and the following text and disclaimers in all such redistributions of the Apple Software. Neither the name, trademarks, service marks, or logos of Apple Inc. may be used to endorse or promote products derived from the Apple Software without specific prior written permission from Apple. Except as expressly stated in this notice, no other rights or licenses, express or implied, are granted by Apple herein, including but not limited to any patent rights that may be infringed by your derivative works or by other works in which the Apple Software may be incorporated.

Unless you explicitly state otherwise, if you provide any ideas, suggestions, recommendations, bug fixes or enhancements to Apple in connection with this software ("Feedback"), you hereby grant to Apple a non-exclusive, fully paid-up, perpetual, irrevocable, worldwide license to make, use, reproduce, incorporate, modify, display, perform, sell, make or have made derivative works of, distribute (directly or indirectly) and sublicense, such Feedback in connection with Apple products and services. Providing this Feedback is voluntary, but if you do provide Feedback to Apple, you acknowledge and agree that Apple may exercise the license granted above without the payment of royalties or further consideration to Participant.

The Apple Software is provided by Apple on an "AS IS" basis. APPLE MAKES NO WARRANTIES, EXPRESS OR
IMPLIED, INCLUDING WITHOUT LIMITATION THE IMPLIED WARRANTIES OF NON-INFRINGEMENT, MERCHANTABILITY
AND FITNESS FOR A PARTICULAR PURPOSE, REGARDING THE APPLE SOFTWARE OR ITS USE AND OPERATION ALONE OR
IN COMBINATION WITH YOUR PRODUCTS.

IN NO EVENT SHALL APPLE BE LIABLE FOR ANY SPECIAL, INDIRECT, INCIDENTAL OR CONSEQUENTIAL DAMAGES
(INCLUDING, BUT NOT LIMITED TO, PROCUREMENT OF SUBSTITUTE GOODS OR SERVICES; LOSS OF USE, DATA, OR
PROFITS; OR BUSINESS INTERRUPTION) ARISING IN ANY WAY OUT OF THE USE, REPRODUCTION, MODIFICATION
AND/OR DISTRIBUTION OF THE APPLE SOFTWARE, HOWEVER CAUSED AND WHETHER UNDER THEORY OF CONTRACT, TORT
(INCLUDING NEGLIGENCE), STRICT LIABILITY OR OTHERWISE, EVEN IF APPLE HAS BEEN

ADVISED OF THE
POSSIBILITY OF SUCH DAMAGE.

Copyright (C) 2009 Apple Inc. All Rights Reserved.

Copyright (c) 2012-2013 Apple Inc. All rights reserved.

Copyright (C) 2013 Apple Inc. All Rights Reserved.

The following applies only to products supporting the cloud service (formerly known as PIXUS Cloud Link, PIXMA Cloud Link, or MAXIFY Cloud Link).

THE BASIC LIBRARY FUNCTIONS

Written by: Philip Hazel
Email local part: ph10
Email domain: cam.ac.uk
University of Cambridge Computing Service, Cambridge, England.
Copyright (c) 1997-2012 University of Cambridge
All rights reserved.

PCRE JUST-IN-TIME COMPILATION SUPPORT

Written by: Zoltan Herczeg
Email local part: hzmester
Emain domain: freemail.hu
Copyright(c) 2010-2012 Zoltan Herczeg
All rights reserved.

STACK-LESS JUST-IN-TIME COMPILER

Written by: Zoltan Herczeg
Email local part: hzmester
Emain domain: freemail.hu
Copyright(c) 2009-2012 Zoltan Herczeg
All rights reserved.

THE C++ WRAPPER FUNCTIONS

Contributed by: Google Inc.
Copyright (c) 2007-2012, Google Inc.
All rights reserved.

THE "BSD" LICENCE

----------Redistribution and use in source and binary forms, with or without modification, are permitted provided that the following conditions are met:

* Redistributions of source code must retain the above copyright notice,
this list of conditions and the following disclaimer.

* Redistributions in binary form must reproduce the above copyright
notice, this list of conditions and the following disclaimer in the
documentation and/or other materials provided with the distribution.

* Neither the name of the University of Cambridge nor the name of Google
Inc. nor the names of their contributors may be used to endorse or
promote products derived from this software without specific prior
written permission.

THIS SOFTWARE IS PROVIDED BY THE COPYRIGHT HOLDERS AND CONTRIBUTORS "AS IS" AND ANY EXPRESS OR IMPLIED WARRANTIES, INCLUDING, BUT NOT LIMITED TO, THE IMPLIED WARRANTIES OF MERCHANTABILITY AND FITNESS FOR A PARTICULAR PURPOSE ARE DISCLAIMED. IN NO EVENT SHALL THE COPYRIGHT OWNER OR CONTRIBUTORS BE LIABLE FOR ANY DIRECT, INDIRECT, INCIDENTAL, SPECIAL, EXEMPLARY, OR CONSEQUENTIAL DAMAGES (INCLUDING, BUT NOT LIMITED TO, PROCUREMENT OF SUBSTITUTE GOODS OR SERVICES; LOSS OF USE, DATA, OR PROFITS; OR BUSINESS INTERRUPTION) HOWEVER CAUSED AND ON ANY THEORY OF LIABILITY, WHETHER IN CONTRACT, STRICT LIABILITY, OR TORT (INCLUDING NEGLIGENCE OR OTHERWISE) ARISING IN ANY WAY OUT OF THE USE OF THIS SOFTWARE, EVEN IF ADVISED OF THE POSSIBILITY OF SUCH DAMAGE.

This software is based in part on the work of the Independent JPEG Group.

Basic Operations

- **Printer Parts**
  - Front
  - Back / Side
  - Inside
  - Operation Panel
- **Using the Printer**
  - Turning the Printer On and Off
  - LCD and Operation Panel
  - Loading Paper in the Top Feed
  - Loading Paper in the Manual Feed Tray
  - Placing Multi-purpose Tray
    - Cautions When Printing with Multi-purpose Tray
    - Placing/Removing a Printable Disc

Printer Parts

- Front
- Back / Side
- Inside
- Operation Panel

Front

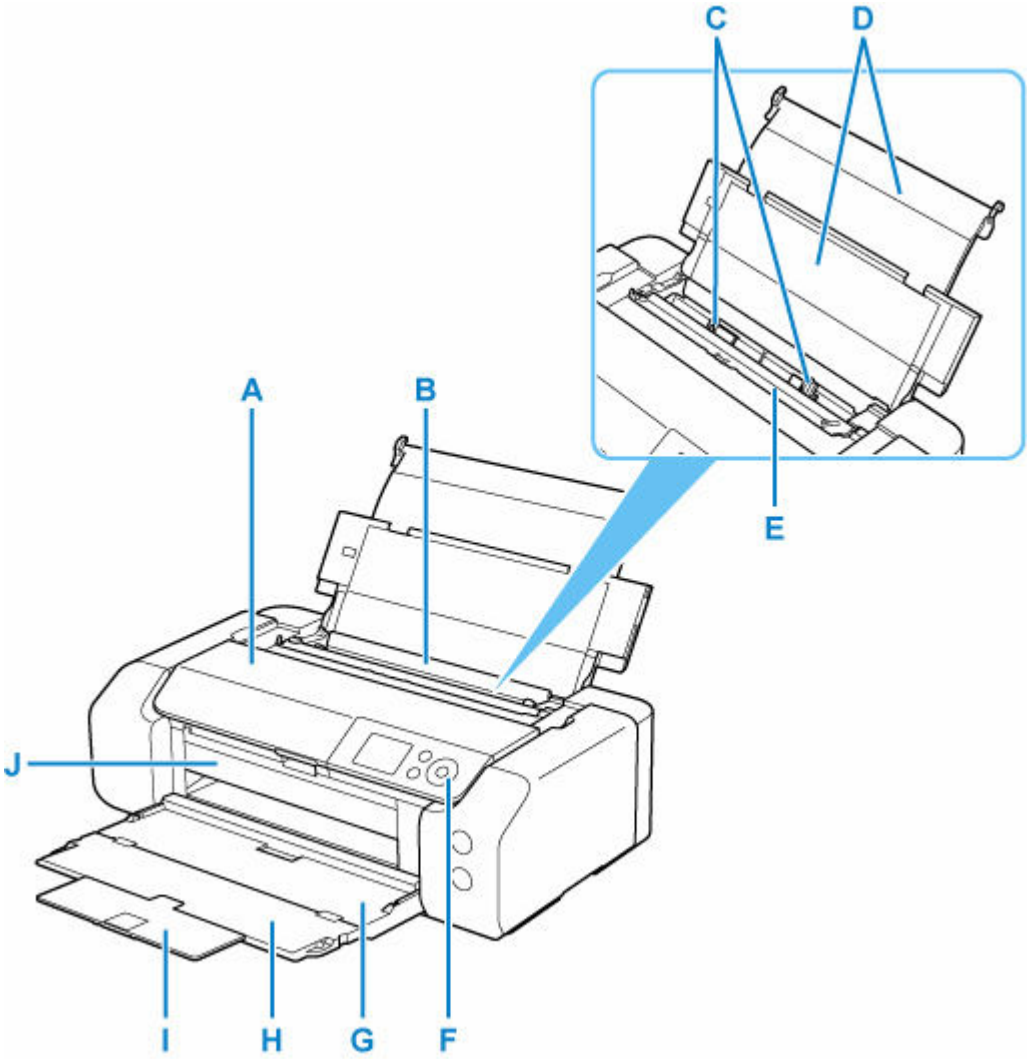

A: Top Cover

Open to replace an ink tank or to remove jammed paper inside the printer.

B: Top Feed

Two or more sheets of the same size and type of paper can be loaded at the same time, and fed automatically one sheet at a time.

➡ Loading Paper in the Top Feed

C: Paper Guides

Align with both sides of the paper stack.

D: Paper Support

Open to load paper in the top feed.

E: Feed Slot Cover

Prevents anything from falling into the feed slot.

Open it to slide the paper guides, and close it before printing.

F: Operation Panel

Use to change the settings of the printer or to operate it.

➡ Operation Panel

G: Paper Output Tray

Printed paper is ejected. Open it before printing.

H: Output Tray Extension

Open to support ejected paper.

I: Paper Output Support

Pull out to support ejected paper.

J: Multi-purpose Tray Guide

Place the multi-purpose tray here.

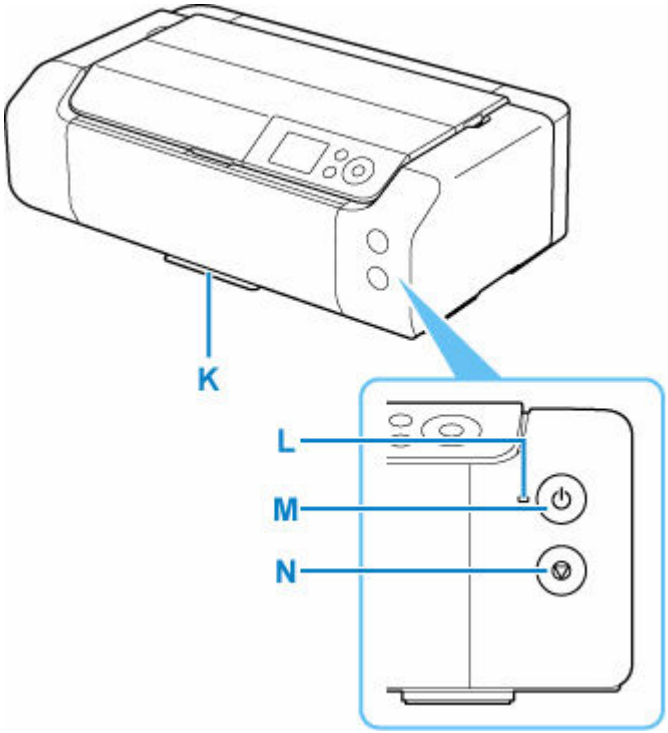

K: Multi-purpose Tray Storage Compartment

The multi-purpose tray supplied with the printer can be stored here.

L: ON lamp

Lights after flashing when the power is turned on.

M: ON button

Turns the power on or off.

➡ Turning the Printer On and Off

N: Stop button

Cancels a print job in progress.

Back / Side

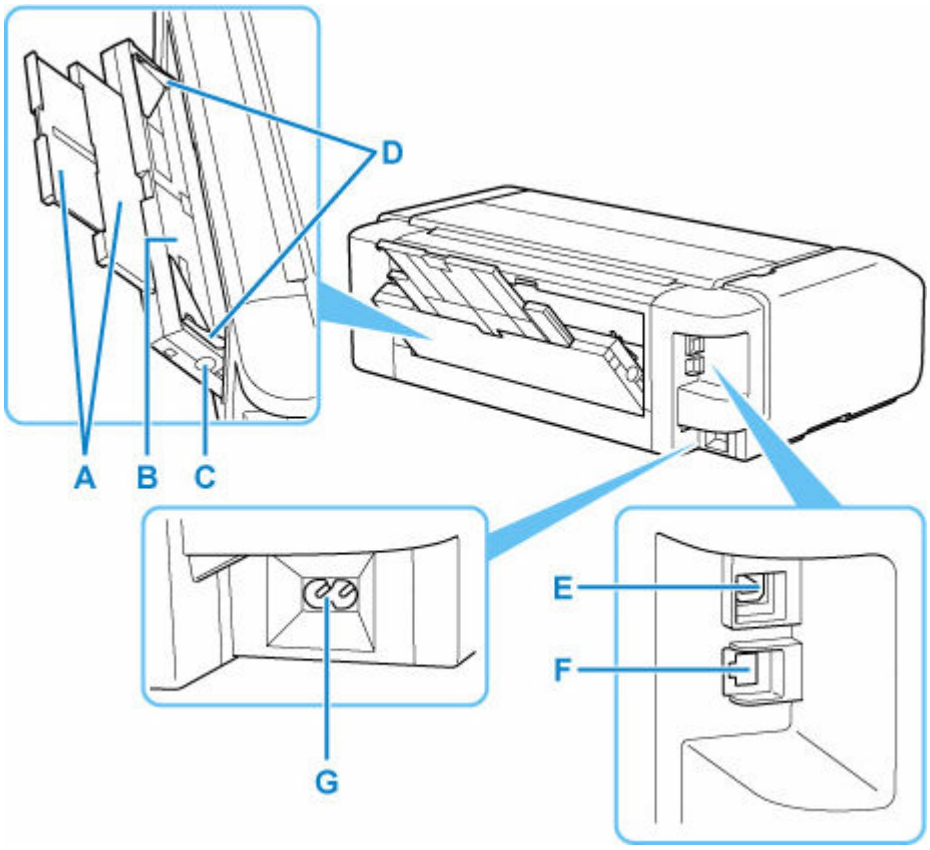

A: Paper Support

Pull out to load paper in the manual feed tray.

B: Manual Feed Tray

Load one sheet of 8" x 10" (20 x 25 cm) size paper or larger, or thick paper at a time.

➡ Loading Paper in the Manual Feed Tray

C: Paper Jam Clearing button

Press this button when removing paper jammed in the manual feed tray.

D: Paper Guides

Align with both sides of the paper stack.

E: USB Port

Plug in the USB cable to connect the printer with a computer.

F: Wired LAN Connector

Plug in the LAN cable to connect the printer to a LAN.

G: Power Cord Connector

Plug in the supplied power cord.

Important

- Do not touch the metal casing.

- Do not plug in or unplug the USB cable or LAN cable while the printer is printing with the computer. This can cause trouble.

Inside

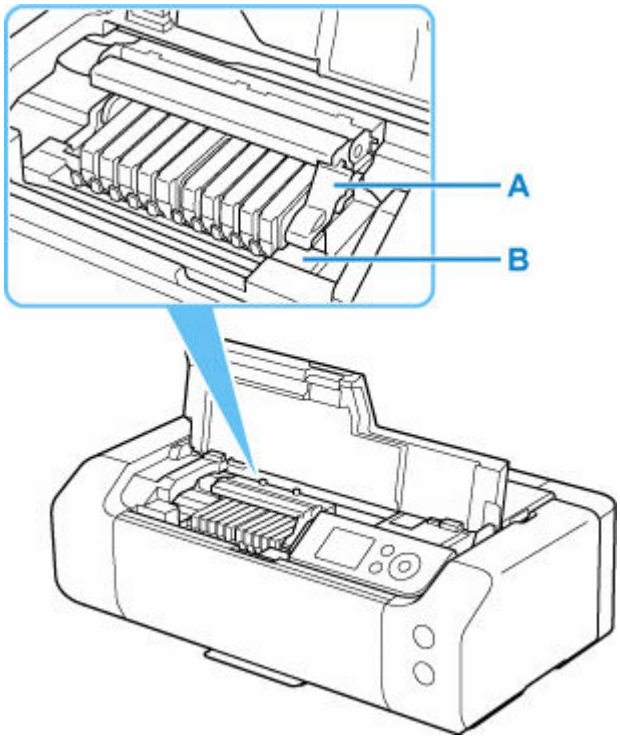

A: Print Head Lock Lever

Locks the print head into place.

B: Print Head Holder

Install the print head here.

Important

- Do not raise the print head lock lever after installing the print head.

Note

- For details on replacing an ink tank, see Replacing Ink Tanks.

Operation Panel

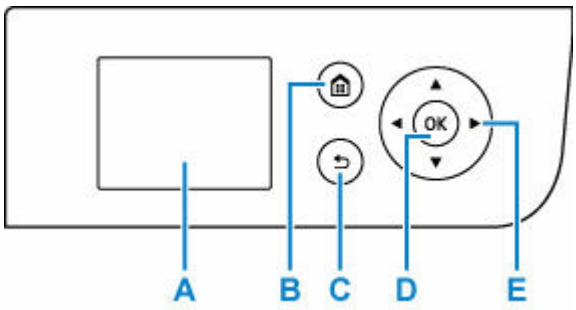

A: LCD (Liquid Crystal Display)

Displays messages, menu items, and the operational status.

B: HOME button

Used to display the HOME screen.

➡ LCD and Operation Panel

C: Back button

Returns the LCD to the previous screen.

D: OK button

Finalizes the selection of a menu or setting item. This button is also used to resolve an error.

E: ▲, ▼, ◄, and ► buttons

Used to select a menu or setting item.

➡ LCD and Operation Panel

Using the Printer

- **Turning the Printer On and Off**
- **LCD and Operation Panel**
- **Loading Paper in the Top Feed**
- **Loading Paper in the Manual Feed Tray**
- **Placing Multi-purpose Tray**
  - Cautions When Printing with Multi-purpose Tray
  - Placing/Removing a Printable Disc

Turning the Printer On and Off

- Checking that Power Is On
- Turning on the printer
- Turning off the printer

Checking that Power Is On

The **ON** lamp is lit when the printer is turned on.

Even if the LCD is off, if the **ON** lamp is lit, the printer is on.

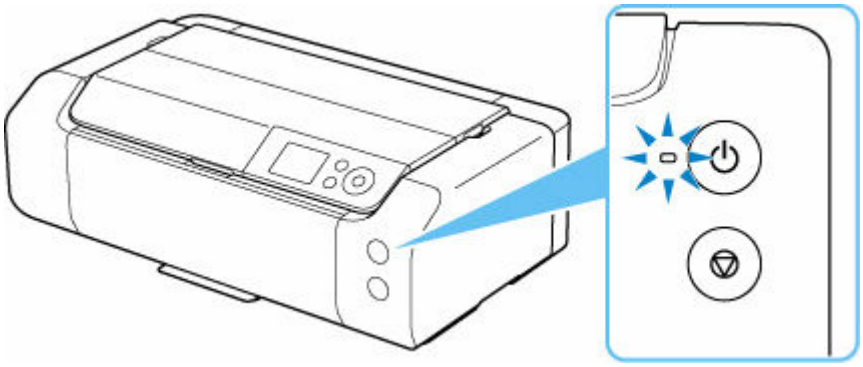

Note

- The LCD will turn off if the printer is not operated for about 3 minutes. To restore the display, press any button or perform the print operation.

Turning on the printer

Press the ON button to turn on the printer.

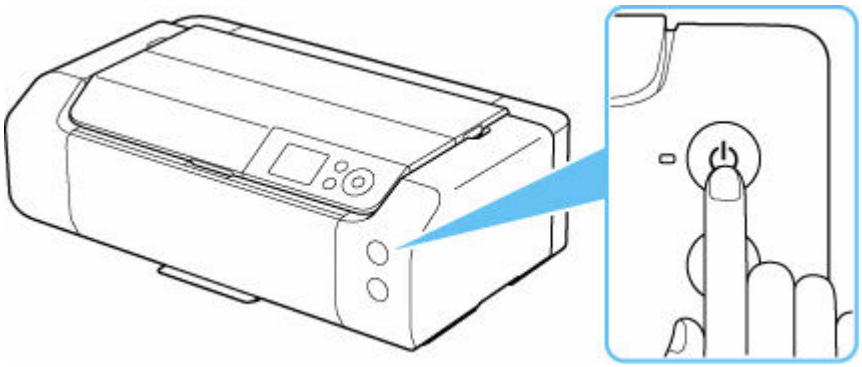

Note

- It may take a while for the printer to start printing immediately after you turn on the printer.
- You can set the printer to automatically turn on when a print operation is performed from a computer connected by USB cable or via network. This feature is set to off by default.

  Power control

Turning off the printer

1. Press the **ON** button to turn the printer off.

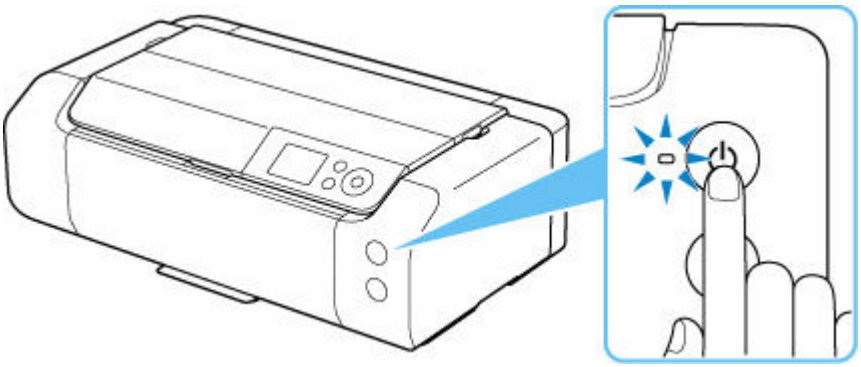

2. Check that both the **ON** lamp and LCD display are off.

Important

- When you unplug the power cord, press the **ON** button, then confirm that the **ON** lamp is off. Unplugging the power cord while the **ON** lamp is lit or flashing may cause drying or clogging of the print head and print quality may be reduced.

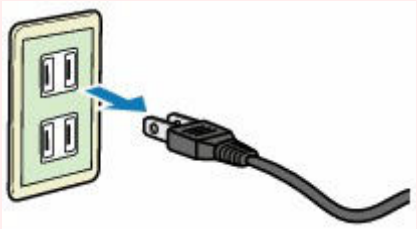

Placing Multi-purpose Tray

- **Cautions When Printing with Multi-purpose Tray**
- **Placing/Removing a Printable Disc**

Cautions When Printing with Multi-purpose Tray

Cautions Common to using Multi-purpose Tray

- Be sure to use the multi-purpose tray supplied with this printer.
- Do not mount the multi-purpose tray while the printer is in operation.
- Do not remove the multi-purpose tray while the printer is in operation. Doing so may damage the printer, the multi-purpose tray, or the media.
- Do not get dirt on the multi-purpose tray or scratches on the reflectors. The printer may not be able to recognize that a media is loaded, or printing may become misaligned. If the multi-purpose tray becomes dirty, wipe the reflector clean with a soft and dry cloth, taking care not to scratch it.
- After printing, allow the printing surface of the media to dry naturally. Do not use hairdryers or expose the media to direct sunlight to dry the ink. Do not touch the printing surface until the ink has dried.

Cautions When Printing onto Printable Disc

- Remove any dirt from the multi-purpose tray before placing printable discs on it. Loading discs on a dirty multi-purpose tray may scratch the recording surface of the discs.
- Do not print onto printable discs that are not compatible with inkjet printing. The ink will not dry and may cause problems with the disc itself or DVD players or other devices it is loaded into.
- Do not print onto a printable disc's recording surface. Doing so will make data recorded onto discs unreadable.
- Hold printable discs by their edges. Do not touch either the label surface (printing surface) or recording surface.
- The multi-purpose tray may become dirty if software other than Easy-PhotoPrint Editor is used.

Placing/Removing a Printable Disc

- Before Placing a Printable Disc
- Placing a Printable Disc
- Removing a Printable Disc

Before Placing a Printable Disc

A printable disc differs from regular disc (BD/DVD/CD, etc.) in that its label surface has been specially processed or printing by an inkjet printer.

The following items are needed to print onto the printable disc.

- Multi-purpose tray (supplied with the printer)

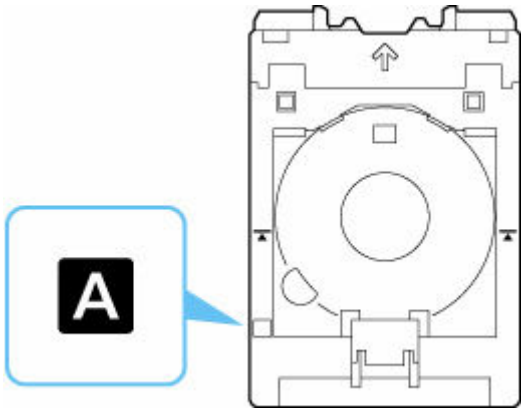

  * Use the multi-purpose tray with "A" on the surface.

- 4.72 in. (12 cm) printable disc



  Obtain a printable disc with a label surface compatible with inkjet printing.

Placing a Printable Disc

To print onto a printable disc, place it on the supplied multi-purpose tray, and then insert it into the printer.

Important

- Do not mount the multi-purpose tray until the message prompting you to load the printable disc appears. Doing so can damage the printer.
- Remove any paper in the manual feed tray.

Note

- If test printing is executed onto test printing paper, depending on the paper type, the printer may not be able to read its size correctly, preventing the border areas from being printed. Test printing paper should be used for purposes of checking the envisioned layout.

1. Take out multi-purpose tray from multi-purpose tray storage compartment.

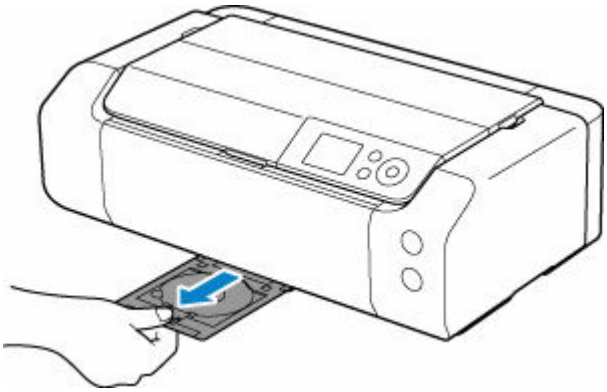

2. Open the paper output tray (A) gently.

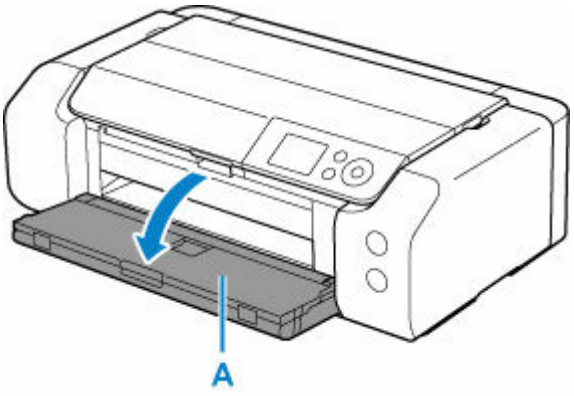

3. When message prompting you to load printable disc appears, open the multi-purpose tray guide (B).

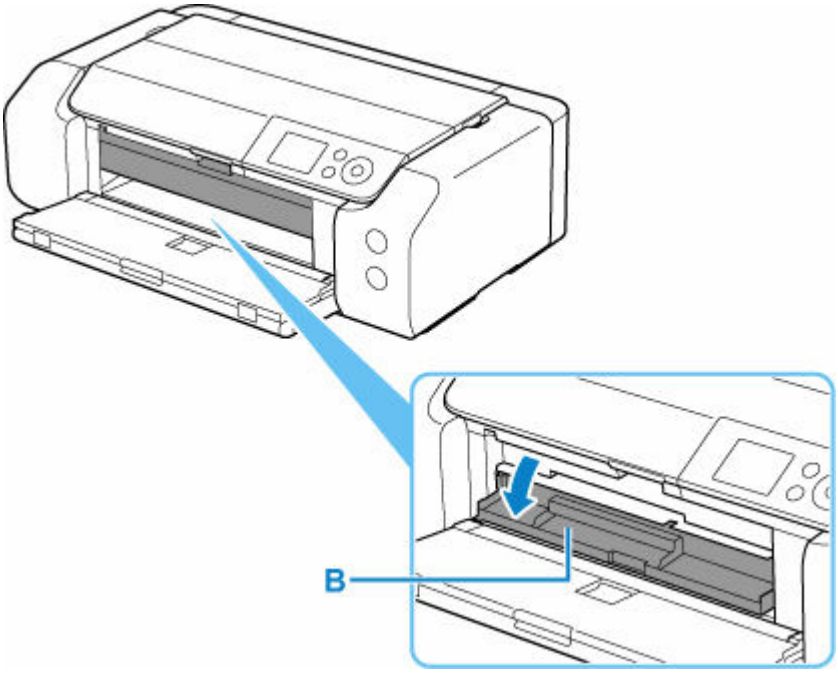

4. Place printable disc on multi-purpose tray.

Important

- Check that there is no dirt on the multi-purpose tray before placing a printable disc on it.
- When placing a printable disc on the multi-purpose tray, do not touch the printing surface of the disc or the reflectors (C) on the multi-purpose tray.

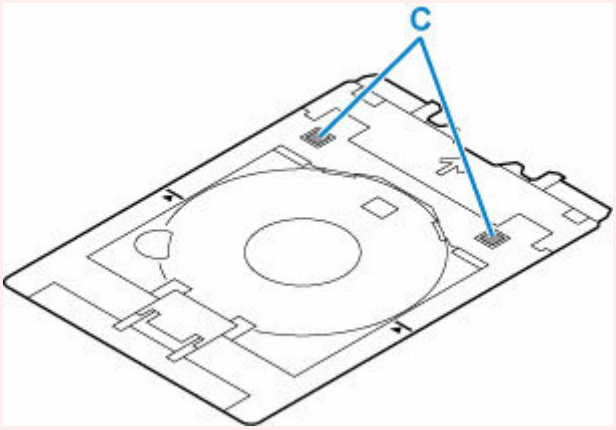

1. WITH PRINT SIDE FACING UP, place printable disc, and press it against lock (D) at bottom.

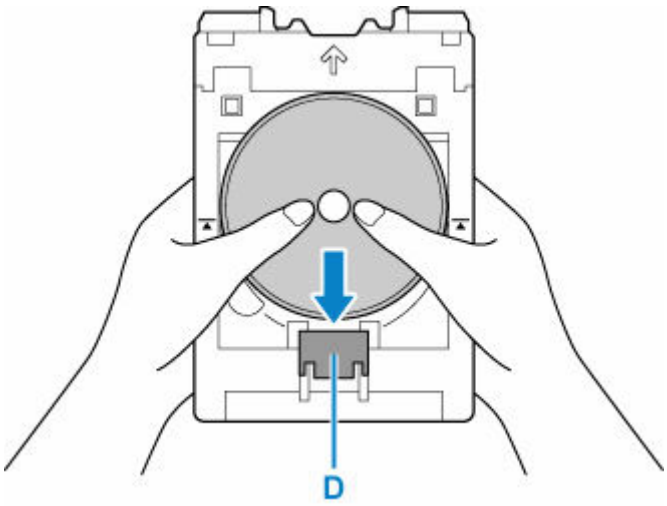

2. While pressing down lock with printable disc, insert top of printable disc into slits (E).

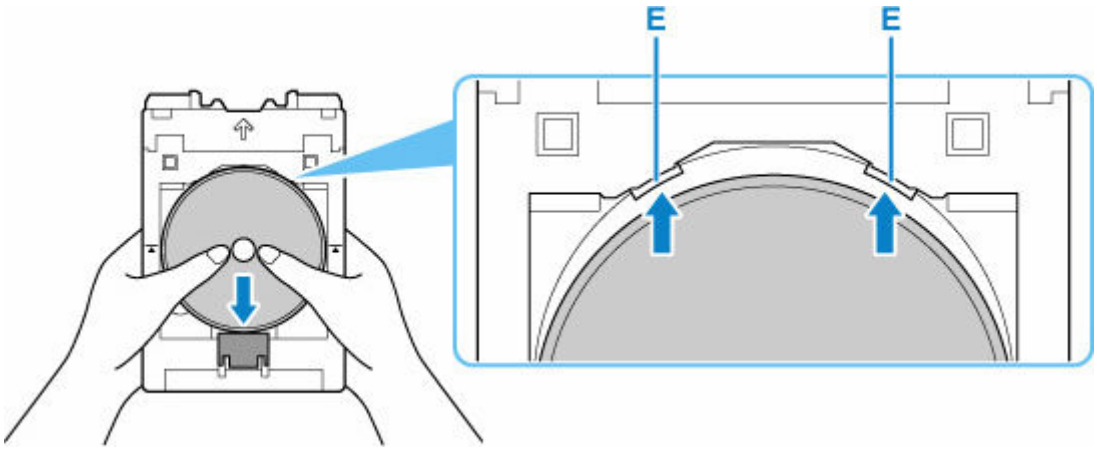

5. Place multi-purpose tray on multi-purpose tray guide.

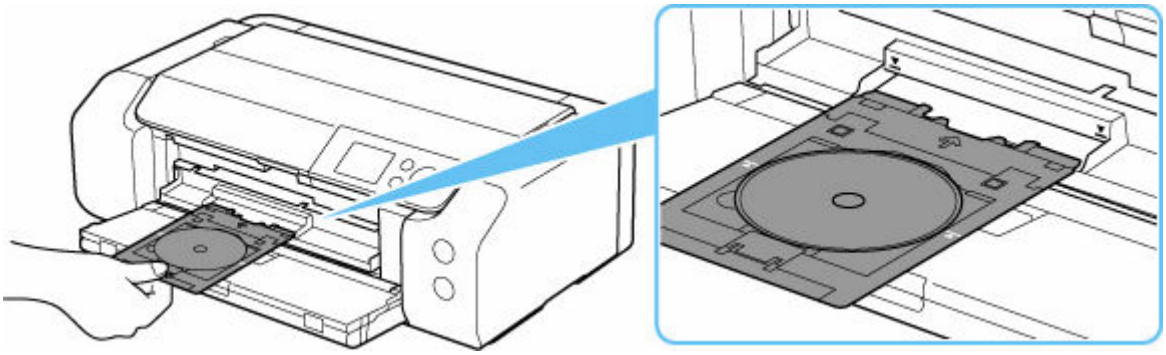

6. Insert multi-purpose tray straight in in horizontal direction until arrow (▼) on multi-purpose tray guide is approximately aligned with arrow (▲) on multi-purpose tray.

Important

- Do not insert the multi-purpose tray beyond the arrow (▼) on the multi-purpose tray guide.

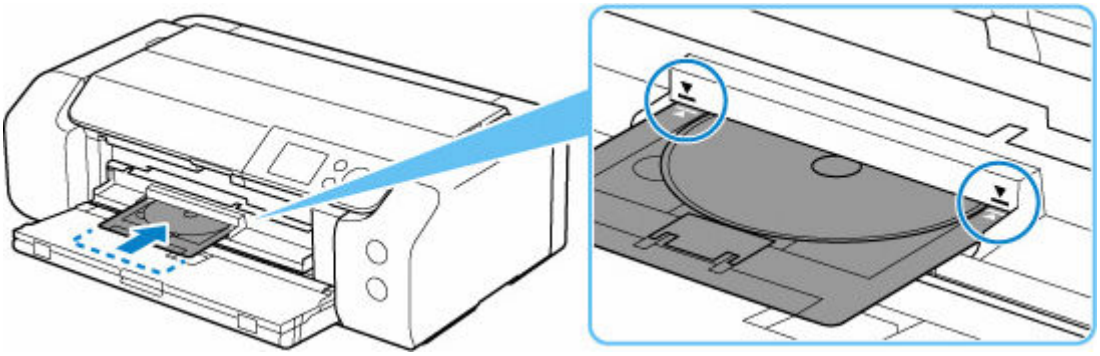

Note

- The multi-purpose tray may be ejected after a certain amount of time passes. In such a case, follow the on-screen instructions to place the multi-purpose tray again.

Removing a Printable Disc

1. Pull out multi-purpose tray.

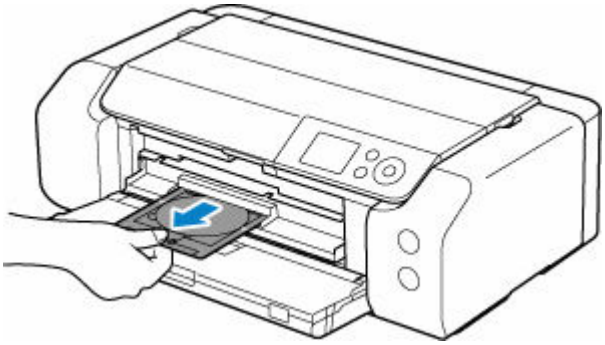

2. Close the multi-purpose tray guide.

Important

- If the multi-purpose tray guide is opened, you cannot print on paper as it will not feed properly. Make sure that the multi-purpose tray guide is closed.

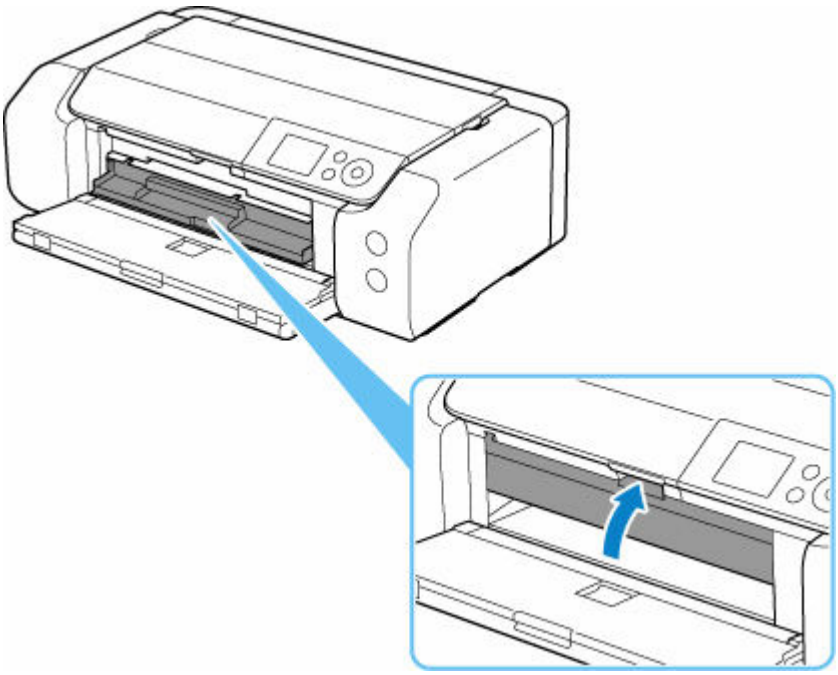

3. While pressing down lock (A), take out printable disc from slits (B) on multi-purpose tray, and remove it.

Important

- Do not touch the printing surface when removing the disc from the multi-purpose tray.

Note

- Allow the printing surface to dry before removing the disc. If you see printing on the multi-purpose tray or on the transparent parts of the inner or outer diameters of the printable disc, wipe them clean after the printing surface has dried.

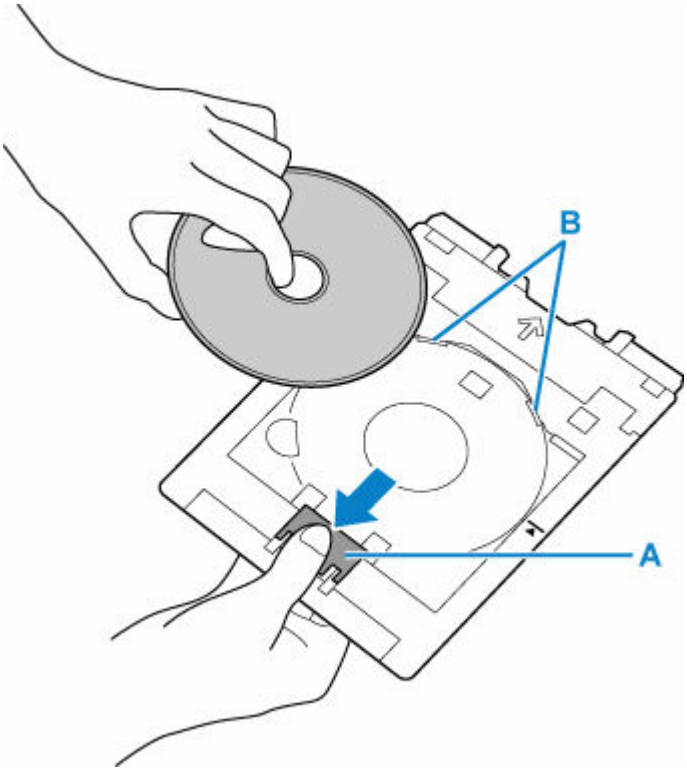

4. Insert multi-purpose tray straight into multi-purpose tray storage compartment.

   When not using the multi-purpose tray, store it in the multi-purpose tray storage compartment.

Related Information

- Cautions When Printing with Multi-purpose Tray
- Print Area (Printable Discs)

Printing

- **Printing from Your Computer (Windows)**
  - Basic Printing Setup Basics
  - Main Controls (Basic Settings Tab)
  - Set Media Type, Quality, etc. (Media/Quality Tab)
  - Set the Layout of Printed Documents (Page Setup Tab)
  - See more...
- **Printing from Your Computer (macOS)**
  - Basic Printing Setup Basics
  - Various Printing Methods
  - Changing the Print Quality and Correcting Image Data
  - See more...
- **Printing from Chromebook**
- **Printing from Printer**
  - Printing Templates Such as Lined or Graph Paper
- **Printing from Smartphone/Tablet**
  - Print Easily from a Smartphone or Tablet with Canon PRINT
  - Printing from iOS Device (AirPrint)
  - About Mopria®
  - Printing with Canon Print Service
- **Using Cloud Service**
- **Printing with a Specified ICC Profile**

Printing from Your Computer (Windows)

- Basic Printing Setup Basic
- Main Controls (Basic Settings Tab)
- Set Media Type, Quality, etc. (Media/Quality Tab)
- Set the Layout of Printed Documents (Page Setup Tab)
- Perform maintenance or settings (Maintenance tab)
- Overview of the Printer Driver
- Updating the Driver

Basic Printing Setup

In the **Basic Settings** tab, you can print in various ways according to your purpose.

1. Check that printer is turned on
2. Open printer driver's setup screen
3. Select Profile (A)

   Select the print settings according to your purpose in **Profiles** on the **Basic Settings** tab.
   If you select a print setting, **Paper Size** and **Media Type** will change automatically.

   Note

   - When the paper size to be printed is selected from **Printer Paper Size**, the zoom level is automatically set according to the selected paper size.
     To select a zoom level of your choice, add a checkmark to **Zoom** and enter a number.

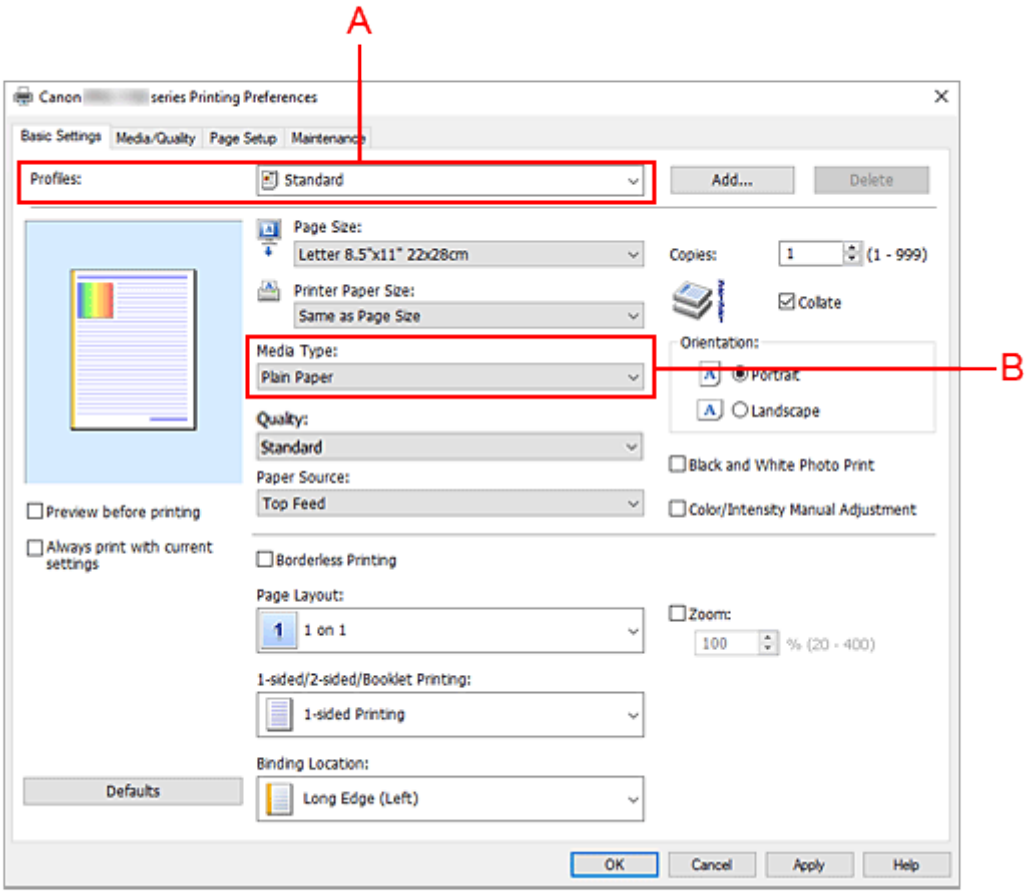

4. Select Media Type (B) According to Requirements
5. Set Paper
6. Click **OK**

Note

- For details about the paper information to be registered to the printer driver and on the printer, see the following:
  - Paper Settings on the Printer Driver and the Printer (Media Type)
  - Paper Settings on the Printer Driver and the Printer (Paper Size)

Main Controls (Basic Settings Tab)

- Basic Settings Tab Description
- Paper Settings on the Printer Driver and the Printer (Media Type)
- Paper Settings on the Printer Driver and the Printer (Paper Size)
- Registering a Frequently Used Printing Profile
- Preventing Printing Errors

Basic Settings Tab Description

The **Basic Settings** tab is for registering commonly used print settings. When you select a registered setting, the printer automatically switches to the preset items.

- Profiles
- Settings Preview
- Preview before printing
- Always print with current settings
- Page Size
- Printer Paper Size
- Media Type
- Quality
- Paper Source
- Copies
- Collate
- Orientation
- Black and White Photo Print
- Borderless Printing
- Page Layout
- Zoom
- 1-sided/2-sided/Booklet Printing
- Binding Location

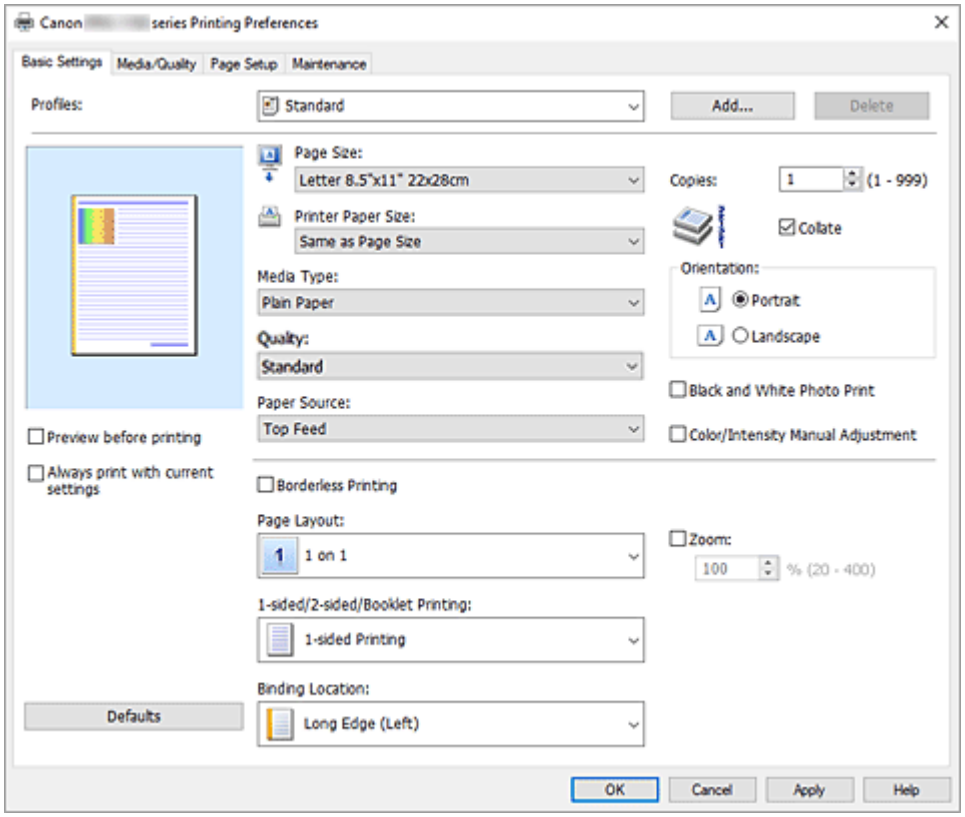

Profiles

The names and icons of frequently used printing profiles are registered. When you select a printing profile according to the purpose of the document, settings that match the purpose are applied.

You can also change a printing profile and register it under a new name. You can delete the registered printing profile.

Standard

These are the factory settings.

If **Page Size**, **Orientation**, and **Copies** were set from the application software, those settings have priority.

Photo Printing

If you select this setting when printing a photo, the photo paper and photo size generally used are set. The **Borderless Printing** check box is checked automatically.

If **Orientation** and **Copies** were set from the application software, those settings have priority.

Paper Saving

Select this setting to save paper when printing a general document. **Page Layout** is set to **2 on 1**, and **1-sided/2-sided/Booklet Printing** is set to **2-sided Printing (Manual)**.

If **Page Size**, **Orientation**, and **Copies** were set from the application software, those settings have priority.

Greeting Card

When selected for printing a greeting card, the **Media Type** is automatically set to **Inkjet Greeting Card**. The **Quality** is also set to **Highest**, and a check-mark is added to **Borderless Printing**.

Note

- You cannot change the order of print settings.

Add...

Displays the **Add to Profiles** dialog box.

Click this button when you want to save the information that you set on the **Basic Settings**, **Media/Quality**, and **Page Setup** tabs to **Profiles**.

Delete

Deletes a registered printing profile.

Select the name of the setting to be deleted from **Profiles**, and click **Delete**. When a confirmation message is displayed, click **OK** to delete the specified printing profile.

Note

- Printing profiles that are registered in the initial settings cannot be deleted.

Settings Preview

The paper illustration shows how the original will be laid out on a sheet of paper.

You can check an overall image of the layout.

Preview before printing

Shows what the print result will look like before you actually print the data.

Check this check box to display a preview before printing.

Uncheck this check box if you do not want to display a preview.

Always print with current settings

Prints documents with the current settings starting from the next print execution.

When you select this function and then close the printer driver setup window, the information that you set on the **Basic Settings**, **Media/Quality**, and **Page Setup** tabs are saved and printing with the same settings is possible starting from the next print execution.

Important

- If you log on with a different user name, the settings that were set when this function was enabled are not reflected in the print settings.
- If a setting was specified on the application software, it has priority.

Page Size

Selects a page size.

Ensure that you select the same page size as you selected within the application.

If you select **Custom...**, the **Custom Paper Size** dialog box opens and allows you to specify any vertical and horizontal dimensions for the paper size.

Printer Paper Size

Selects the size of paper actually loaded into the printer.

Normally, it will appear as **Same as Page Size**, and the document is printed with no scaling.

If you select a paper size that is smaller than the **Page Size**, the document size will be reduced. If you select a paper size that is larger, the document size will be enlarged.

Also if you select **Custom...**, the **Custom Paper Size** dialog box opens and allows you to specify any vertical and horizontal dimensions for the paper size.

Media Type

Selects a type of printing paper.

Select a media type that matches the paper that is loaded in the printer. This ensures that printing is carried out properly for the specified paper.

Quality

Selects your desired printing quality.

Select one of the following to set the print quality level that is appropriate for the purpose.

To set the print quality level individually, click the **Media/Quality** tab, and for **Quality**, select **Custom**. The **Set...** becomes enabled. Click **Set...** to open the **Custom** dialog box, and then specify the desired settings.

Highest

Gives the highest priority to print quality.

Standard

Prints with average speed and quality.

Fast

Gives priority to printing speed over print quality.

Paper Source

Shows the source from which paper is supplied.

You may be able to switch the paper source with the printer driver.

Manual Feed

Paper is supplied from the manual feed tray in the back.

Top Feed

Paper is always supplied from the top feed.

Important

- Depending on the media type and size, the **Paper Source** settings that can be selected may differ.

Copies

Specifies the number of copies you want to print. You can specify a value from 1 to 999.

Important

- When the application software that you used to create the document has the same function, specify the settings on the printer driver. However, if the print results are not acceptable, specify the function settings on the application software.

Collate

Check this check box to group together the pages of each copy when you want to print multiple copies. Uncheck this check box when you want to print with all pages of the same page number grouped together.

Important

- When the application software that you used to create the document has the same function, give priority to the printer driver settings. However, if the print results are not acceptable, specify the function settings on the application software. When you specify the number of copies and the printing order with both the application and this printer driver, the number of copies may be multiplied numbers of the two settings or the specified printing order may not be enabled.

Orientation

Selects the printing orientation.

If the application used to create your document has a similar function, select the same orientation that you selected in that application.

Portrait

Prints the document so that its top and bottom positions are unchanged relative to the paper feed direction. This is the default setting.

Landscape

Prints the document by rotating it 90 degrees relative to the paper feed direction.

You can change the rotation direction by going to the **Maintenance** tab, opening the **Custom Settings** dialog box, and then using **Rotate 90 degrees left when orientation is [Landscape]** check box.

To rotate the document 90 degrees to the left when printing, select the **Rotate 90 degrees left when orientation is [Landscape]** check box.

Black and White Photo Print

This function converts the data to monochrome data when printing your document.

Color/Intensity Manual Adjustment

Select this setting if you want to select the **Color Correction** method, or if you want to individually set **Cyan**, **Magenta**, **Yellow**, **Tone**, **Brightness**, or **Contrast**.

You can also configure clear-coating.

Borderless Printing

Performs borderless printing without any margins on the paper.

With the borderless printing function, the document to be printed is enlarged, so that it extends slightly off the paper. In other words, the document is printed without any margin.

To adjust the amount that the document extends beyond the paper, click the **Page Setup** tab, add a checkmark to **Borderless Printing**, and enter the value in **Amount of Extension**.

Page Layout

Selects the size of the document you want to print and the type of printing.

1 on 1 to 16 on 1

Multiple pages of document can be printed on one sheet of paper.

To change the page order, click **Preferences...**. In the **Page Layout Printing** dialog box that appears, specify **Page Order**.

Poster (1 x 2) to Poster (4 x 4)

This function enables you to enlarge the image data and divide the enlarged data into several pages to be printed. You can also glue together these sheets of paper to create large printed matter, such as a poster.

Preferences...

Opens the **Poster Printing** dialog box.

Click this button to set details on poster printing.

Zoom

Specifies an enlargement or reduction ratio for the document you want to print.

1-sided/2-sided/Booklet Printing

1-sided Printing

Select when performing single-sided printing.

2-sided Printing (Manual)

Select when performing duplex printing.

Booklet Printing (Manual)

The booklet printing function allows you to print data for a booklet. Data is printed on both sides of the paper. This type of printing ensures that pages can be collated properly, in page number order, when the printed sheets are folded and stapled at the center.

Preferences...

Opens the **Booklet Printing** dialog box.

Click this button to set details on booklet printing.

Binding Location

Selects the stapling margin position. The printer analyzes the **Orientation** and **Page Layout** settings, and automatically selects the best stapling margin position. Check **Binding Location**, and select from the list to change it.

To specify the width of the binding margin, set it from the **Page Setup** tab.

Defaults

Restores all the settings you have changed to their default values.

Click this button to return all settings on the **Basic Settings**, **Media/Quality**, and **Page Setup** tabs to their default values (factory settings).

Add to Profiles dialog box

This dialog box allows you to save the information that you set on the **Basic Settings**, **Media/Quality**, and **Page Setup** tabs and add the information to the **Profiles** list on the **Basic Settings** tab.

Name

Enter the name for the printing profile you wish to save.

Up to 255 characters can be entered.

The name appears, with its associated icon, in the **Profiles** list on the **Basic Settings** tab.

Options...

Opens the **Add to Profiles** dialog box.

Changes the details of printing profile to be saved.

Add to Profiles dialog box

Select the icons of the printing profiles to be registered to **Profiles**, and change the items to be saved in the printing profiles.

Icon

Select the icon for the printing profile you wish to save.

The selected icon appears, with its name, in the **Profiles** list on the **Basic Settings** tab.

Save the paper size setting

Saves the paper size to the printing profile in **Profiles**.

To apply the saved paper size when the printing profile is selected, check this check box.

If this check box is unchecked, the paper size is not saved, and consequently the paper size setting is not applied when the printing profile is selected. Instead the printer prints with the paper size specified with the application software.

Save the orientation setting

Saves the **Orientation** to the printing profile in **Profiles**.

To apply the saved print orientation when the printing profile is selected, check this check box.

If this check box is unchecked, the print orientation is not saved, and consequently the **Orientation** setting is not applied when the printing profile is selected. Instead the printer prints with the print orientation specified with the application software.

Save the copies setting

Saves the **Copies** setting to the printing profile in **Profiles**.

To apply the saved copies setting when the printing profile is selected, check this check box.

If this check box is unchecked, the copies setting is not saved, and consequently the **Copies** setting is not applied when the printing profile is selected. Instead the printer prints with the copies setting specified with the application software.

Custom Paper Size dialog box

This dialog box allows you to specify the size (width and height) of the custom paper.

Units

Select the unit for entering a user-defined paper size.

Paper Size

Specifies the **Width** and the **Height** of the custom paper. Measurement is shown according to the units specified in **Units**.

Page Layout Printing dialog box

This dialog box allows you to select the number of document pages to be placed on one sheet of paper, the page order, and whether a page border line is to be printed around each document page. The settings specified in this dialog box can be confirmed in the settings preview on the printer driver.

Page Order

Specifies the document orientation to be printed on a sheet of paper.

Page Border

Prints a page border line around each document page. Check this check box to print the page border line.

Exclude single page documents from Page Layout Printing

If you add a checkmark, single-page documents are printed on a single sheet without performing Page Layout Printing.

Poster Printing dialog box

This dialog box allows you to select the size of the image to be printed. You can also make settings for cut lines and paste markers which are convenient for pasting together the pages into a poster.
The settings specified in this dialog box can be confirmed in the settings preview on the printer driver.

Print "Cut/Paste" in margins

Specifies whether to print the words "Cut" and "Paste" in the margins. These words serve as guidelines for pasting together the pages into a poster. Check this check box to print the words.

Note

- Depending on the environment of the printer driver you are using, this function may not be available.

Print "Cut/Paste" lines in margins

Specifies whether to print cut lines that serve as guidelines for pasting together the pages into a poster. Check this check box to print the cut lines.

Print page range

Specifies the printing range. Select **All** under normal circumstances.
Select **Pages** to specify a specific page or range.

Note

- If some of the pages have not been printed well, specify the pages that do not need to be printed by clicking them in the settings preview of the **Page Setup** tab. Only the pages shown on the screen will be printed this time.

Booklet Printing dialog box

This dialog box allows you to set how to bind the document as a booklet. Printing only on one side and printing a page border, can also be set in this dialog box.
The settings specified in this dialog box can be confirmed in the settings preview on the printer driver.

Preview Icon

Shows the settings made on the **Booklet Printing** dialog box.

You can check what the document will look like when printed as a booklet.

Margin for stapling

Specifies which side of the booklet is to be stapled.

Insert blank page

Selects whether to print the document on one side or both sides of the booklet.

Check this check box to print the document on one side of the booklet and select the side to be left blank from the list.

Margin

Specifies the width of the stapling margin.

The specified width becomes the stapling margin from the center of the sheet.

Page Border

Prints a page border line around each document page.

Check this check box to print the page border line.

Paper Settings on the Printer Driver and the Printer (Media Type)

When you use this printer, selecting a media type and paper size that matches the print purpose will help you achieve the best print results.
Depending on the media type you are using, specify the media type settings on the printer driver or the printer's operation panel as described below.

Canon genuine papers (Document Printing)

Media name <Model No.>	Media Type in the printer driver	Paper information registered on the printer
Canon Red Label Superior <WOP111>	**Plain Paper**	**Plain paper**
Canon Océ Office Colour Paper <SAT213>	**Plain Paper**	**Plain paper**

Canon genuine papers (Photo Printing)

Media name <Model No.>	Media Type in the printer driver	Paper information registered on the printer
Photo Paper Plus Glossy II <PP-201/PP-208/ PP-301>	**Photo Paper Plus Glossy II A**	**Plus Glossy II A**
Photo Paper Pro Platinum <PT-101>	**Photo Paper Pro Platinum**	**Pro Platinum**
Photo Paper Pro Luster <LU-101>	**Photo Paper Pro Luster**	**Pro Luster**
Photo Paper Plus Semi-gloss <SG-201>	**Photo Paper Plus Semi-gloss**	**Plus Semi-gloss**
Matte Photo Paper <MP-101>	**Matte Photo Paper**	**Matte**
Premium Fine Art Smooth <FA-SM1>	**Premium Fine Art Smooth**	**Fine Art Smooth**
Premium Fine Art Rough <FA-RG1>	**Premium Fine Art Rough**	**Fine Art Rough**
Photo Paper Pro Premium Matte <PM-101>	**Photo Paper Pro Premium Matte A**	**ProPremiumMatteA**

Commercially available papers

When you use non-genuine Canon paper, you can print easily by using the existing settings that have been prepared on the printer's operation panel and in the printer driver.

Media name	Media Type in the printer driver	Paper information registered on the printer
Plain Paper (including recycled paper)	**Plain Paper**	**Plain paper**
Lightweight Photo Paper (Approximately 0.1mm to less than 0.3mm)	**Lightweight Photo Paper** *2	**Light Photo Paper**

Lightweight Photo Paper (Approximately 0.1mm to less than 0.3mm)	**Lightweight Photo Paper A** *2 *4	**Light Photo Paper A**
Lightweight Photo Paper (Approximately 0.1mm to less than 0.3mm)	**Lightweight Photo Paper B** *2 *4	**Light Photo Paper B**
Heavyweight Photo Paper (Approximately 0.3mm to less than 0.6mm)	**Heavyweight Photo Paper** *2	**Heavy Photo Paper**
Photo Paper (Long-form)	**Photo Paper (Long-form Printing)** *2	**Photo Paper (Long-form)**
Baryta Photo Paper *3	**Baryta Photo Paper**	**Baryta PhotoPaper**
Heavyweight Fine Art Paper (Approximately 0.1mm to less than 0.3mm)	**Heavyweight Fine Art Paper** *2	**Heavy Art Paper**
Extra Heavyweight Fine Art Paper (Approximately 0.3mm to less than 0.6mm)	**Extra Heavyweight Fine Art Paper** *2	**EX Hvy Art Paper**
Highest Density Fine Art Paper *1	**Highest Density Fine Art Paper** *2	**High Density Art**
Fine Art Paper (Long-form)	**Fine Art Paper (Long-form Print)** *2	**FineArtPaper (Long-form)**
Canvas	**Canvas** *2	**Canvas**
Japanese Paper Washi	**Japanese Paper Washi** *2	**Japanese Paper**
Greeting Cards	**Inkjet Greeting Card**	**IJ Greeting Card**
Card Stock	**Card Stock**	**Card stock**

*1 Use the **Highest Density Fine Art Paper** setting when using a type of Fine Art Paper that is particularly thick and will absorb more ink than others. More ink is used than in regular printing and therefore depending on the type of paper, it can increase the depth of color.
However, depending on the type of paper used, the ink can bleed into the paper, causing the paper to rub and get dirty, or damage the print heads.

*2 To improve the print quality and paper feeding when using paper other than Canon genuine paper, create a custom paper by using Media Configuration Tool and add it to the printer.
These media types can be used as custom paper standards.

*3 If you are using baryta photo paper for inkjet printers, configure settings for **Baryta Photo Paper**.
It improves the consistency of the coloring and gloss, achieving high-quality print results with a sense of depth.

*4 If you print on photo paper and notice some streaks or uneven colors, select **Lightweight Photo Paper A** from a list of paper types.If you select **Lightweight Photo Paper A** and notice some smudges or blurs on the printed area, change the paper type to **Lightweight Photo Paper B** in the print settings.
Print quality or ink usage results may differ from those obtained when using the print settings for Canon genuine papers.

Note

- If you have added a new media type using the Media Configuration Tool, open the printer driver settings screen and from the **Maintenance** tab, select **Update Media Information** and carry out a driver media information update.
  When printing on a newly added media type, change both the media settings on the printer driver and the registered media information on the printer to those of the new media.
- When you set **Media Type** to **Matte Photo Paper**, **Premium Fine Art Smooth**, **Premium Fine Art Rough**, or **Photo Paper Pro Premium Matte A** in the printer driver,, we recommend that you set **Page Size** to **4"x6" 10x15cm**, **L 89x127mm**, or "XXX (Margin 25)" in the printer driver.
  For information about printable ranges, refer to "Printing Area."

Paper Settings on the Printer Driver and the Printer (Paper Size)

When you use this printer, selecting a paper size that matches the print purpose will help you achieve the best print results.
You can use the following paper sizes on this printer.

Printer Paper Size in the printer driver	Paper information registered on the printer
Letter 8.5"x11" 22x28cm	Letter
Legal 8.5"x14" 22x36cm	Legal
11"x17" 279.4x431.8mm	11"x17"(28x43cm)
A5	A5
A4	A4
A3	A3
A3+ 13"x19" 33x48cm	A3+
B5	B5
B4	B4
4"x6" 10x15cm	KG/4"x6"(10x15)
5"x7" 13x18cm	2L/5"x7"(13x18)
7"x10" 18x25cm	7"x10"(18x25cm)
8"x10" 20x25cm	8"x10"(20x25cm)
9"x13" 23x33cm	9"x13"(23x33cm)
10"x12" 25x30cm	10"x12"(25x30cm)
11"x14" 28x36cm	11"x14"
13"x19" (Super B)	13"x19" (Super B)
210x594mm	210x594mm
L 89x127mm	L(89x127mm)
2L 127x178mm	2L/5"x7"(13x18)
Square 5"x5" 13x13cm	Square 5"
Square 12"x12" 30x30cm	12"x12"(30x30cm)
Letter (Margin 25)	Letter

210x594mm (Margin 25)	**210x594mm**
11"x17" (Margin 25)	**11"x17"(28x43cm)**
A4 (Margin 25)	**A4**
A3 (Margin 25)	**A3**
A3+ (Margin 25)	**A3+**
Hagaki 100x148mm	**Hagaki**
Hagaki 2 200x148mm	**Hagaki 2**
Custom Size	**Any size**

Registering a Frequently Used Printing Profile

You can register the frequently used printing profile to **Profiles** on the **Basic Settings** tab. Unnecessary printing profiles can be deleted at any time.

Registering a Printing Profile

1. Open the printer driver setup window

2. Set the necessary items

   From **Profiles** on the **Basic Settings** tab, select the printing profile to be used and if necessary, change each of the settings.
   You can also register necessary items on the **Media/Quality** and **Page Setup** tabs.

3. Click **Add...**

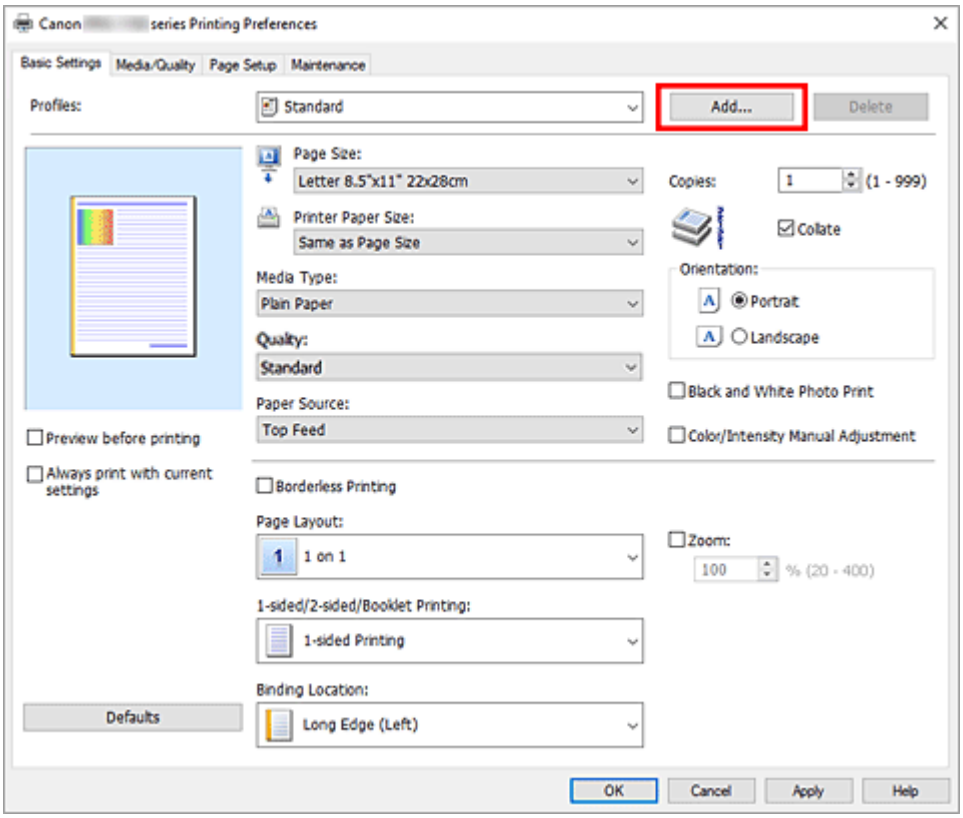

   The **Add to Profiles** dialog box opens.

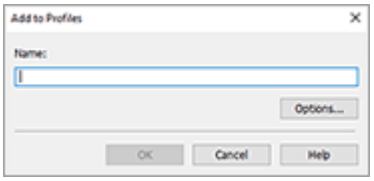

4. Save the settings

Enter a name for the print settings to register in the **Name** field. If necessary, click **Options...**, set the items, and then click **OK**.
In the **Add to Profiles** dialog box, click **OK** to save the print settings and return to the **Basic Settings** tab.
The name and icon are displayed in **Profiles**.

Important

- To save the page size, orientation, and number of copies that was set in each sheet, click **Options...**, and check each item.

Note

- When you re-install the printer driver or upgrade the printer driver version, the print settings that are already registered will be deleted from **Profiles**.
  Registered print settings cannot be saved and preserved. If a profile is deleted, register the print settings again.

Deleting Unnecessary Printing Profile

1. Select the printing profile to be deleted

   Select the printing profile you want to delete from the **Profiles** list on the **Basic Settings** tab.

2. Delete the printing profile

   Click **Delete**. When the confirmation message appears, click **OK**.
   The selected printing profile is deleted from the **Profiles** list.

Note

- Printing profiles that are registered in the initial settings cannot be deleted.

Preventing Printing Errors

You can display and check the print result before printing.

You can also set the print results display on the **Basic Settings** tab.

1. Open the printer driver setup window
2. Set the preview

   Check the **Preview before printing** check box on the **Media/Quality** tab.
3. Click **OK**

   When you perform print, the Canon IJ Preview opens and displays the print results.

Related Topic

➡ Canon IJ Preview

Set Media Type, Quality, etc. (Media/Quality Tab)

- **Media/Quality Tab Description**
- **Switching the Paper Source to Match the Purpose**
- **Grayscale Printing**
- **Adjusting Tone**
- **Specifying Color Correction**
  - Optimal Photo Printing of Image Data
  - Adjusting Colors with the Printer Driver
  - Printing with ICC Profiles
  - Interpreting the ICC Profile
- **Adjust Colors**
- **Adjusting Brightness**
- **Adjusting Contrast**
- **Changing the Clear Coating Settings**

Media/Quality Tab Description

The **Media/Quality** tab allows you to create a basic print setup in accordance with the media type. You can also adjust the print quality and color tones.

- Settings Preview
- Media Type
- Paper Source
- Quality
- Color/Intensity
- Black and White Photo Print
- Preview before printing

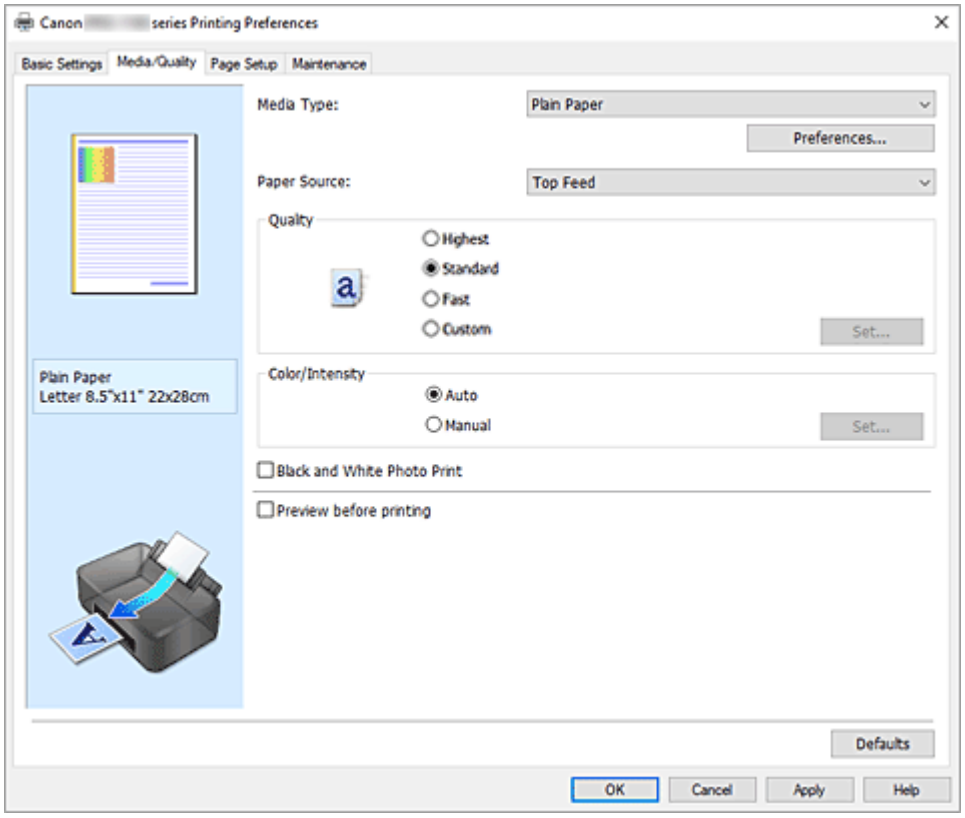

Settings Preview

The paper illustration shows how the original will be laid out on a sheet of paper.
You can check an overall image of the layout.
The printer illustration shows how to load paper to match the printer driver settings.
Check whether the printer is set up correctly by looking at the illustration before you start printing.

Media Type

Selects a type of printing paper.
Select a media type that matches the paper that is loaded in the printer. This ensures that printing is carried out properly for the specified paper.

Preferences...

Open the **Advanced Paper Settings** dialog box, and specify detailed print settings that match the media type loaded in the printer.

Paper Source

Shows the source from which paper is supplied.

You may be able to switch the paper source with the printer driver.

Manual Feed

Paper is supplied from the manual feed tray in the back.

Top Feed

Paper is always supplied from the top feed.

Important

- Depending on the media type and size, the **Paper Source** settings that can be selected may differ.

Quality

Selects your desired printing quality.

Select one of the following to set the print quality level that is appropriate for the purpose.

Important

- Depending on the **Media Type** settings, the same print results may be produced even if the **Quality** is changed.

Highest

Gives the highest priority to print quality.

Standard

Prints with average speed and quality.

Fast

Gives priority to printing speed over print quality.

Custom

Select this to set the print quality level individually.

Set...

Select **Custom** in **Quality** to make it clickable.

Open the **Custom** dialog box to set individual print quality levels.

Color/Intensity

Selects color adjustment method.

Auto

Cyan, **Magenta**, **Yellow**, **Brightness**, **Contrast**, and so on are adjusted automatically.

Manual

Select when you set the individual settings such as **Cyan**, **Magenta**, **Yellow**, **Tone**, **Brightness**, **Contrast**, etc. and **Color Correction** method.

You can also specify **Clear Coating** settings.

Set...

Select **Manual** for **Color/Intensity** to enable this button.

In the **Manual Color Adjustment** dialog box, you can adjust individual color settings such as **Cyan**, **Magenta**, **Yellow**, **Tone**, **Brightness**, and **Contrast** on the **Color Adjustment** tab, and select the **Color Correction** method on the **Matching** tab.

You can also set clear coat settings on the **Clear Coating** tab.

Note

- If you want to use an ICC profile to adjust colors, use the **Manual Color Adjustment** dialog box to set the profile.

Black and White Photo Print

Black and white photo print refers to a function that converts data to monochrome data when printing your document.
Check this check box to print a color document in monochrome.

Preview before printing

Shows what the print result will look like before you actually print the data.
Check this check box to display a preview before printing.

Defaults

Restores all the settings you have changed to their default values.
Clicking this button restores all the settings on the current screen to their default values (factory settings).

Advanced Paper Settings dialog box

Drying Time

Allows you to set how long the printer rests before printing of the next page starts.
If the next page is ejected before the print surface dries completely and the paper becomes stained, set a longer ink drying time.

Print Head Height

Allows you to widen the gap between the print head and the paper to reduce paper abrasion when printing high density pages. To reduce paper abrasion, select **Avoid Paper Abrasion**.

Custom dialog box

Set the quality level, and select the desired print quality.

Quality

You can use the slider bar to adjust the print quality level.

Important

- Certain print quality levels cannot be selected depending on the settings of **Media Type**.

Note

- The **Highest**, **Standard**, or **Fast** print quality modes are linked with the slider bar. Therefore when the slider bar is moved, the corresponding quality and value are displayed on the left. This is the same as when the corresponding radio button is selected for **Quality** on the **Media/Quality** tab.

Color Adjustment Tab

This tab allows you to adjust the color balance by changing the settings of the **Cyan**, **Magenta**, **Yellow**, **Tone**, **Brightness**, and **Contrast** options.

Preview

Shows the effect of color adjustment.

The color and brightness change when each item is adjusted.

Note

- The graphic is in monochrome when the **Black and White Photo Print** check box is checked.

View Color Pattern

Displays a pattern for checking color changes produced by color adjustment.

If you want to display the preview image with a color pattern, check this check box.

Cyan / Magenta / Yellow

Adjusts the strengths of **Cyan**, **Magenta**, and **Yellow**.

Moving the slider to the right makes a color stronger, and moving the slider to the left makes a color weaker.

You can also directly enter a value linked to the slider. Enter a value in the range from -50 to 50.

This adjustment changes the relative amount of ink of each color used, which alters the total color balance of the document. Use your application if you want to change the total color balance significantly. Use the printer driver only if you want to adjust the color balance slightly.

Tone

Set the color tones for monochrome printing.

You can also select colors for monochrome color tones from the pull-down menu.

Cool Tone

This item adjusts color tones to cool shades of gray (cool black). When you select this item, a value of -30 is entered for **X**, and a value of 0 for **Y**.

Black and White

This item adjusts color tones to neutral shades of gray. When you select this item, a value of 0 is entered for **X**, and a value of 0 for **Y**.

Warm Tone

This item adjusts color tones to warm shades of gray (warm black). When you select this item, a value of 30 is entered for **X**, and a value of 0 for **Y**.

Custom

You can adjust the color tones by using the horizontal and vertical sliders while checking the colors in the center adjustment area.

Adjust the horizontal and vertical sliders by dragging them to the left/right or up/down, respectively.

You can also adjust color tones by clicking or dragging the center adjustment area with the mouse.

You can also directly enter values that are linked to the sliders. When you enter values, set values in the range of -100 to 100 for **X**, and -50 to 50 for **Y**.

Note

- **Custom** cannot be selected since it is displayed automatically when the adjustment value is directly entered.

X, Y (Monochromatic adjustment value)

If necessary, you can adjust monochromatic colors manually.

To adjust the color tones, either enter values directly or click the up/down arrows.

You can also adjust the color tones by clicking or dragging the adjustment area with the mouse.
The value is also linked to the horizontal and vertical sliders.
When you enter values, set values in the range of -100 to 100 for **X**, and -50 to 50 for **Y**.
The selected value will be shown in the preview on the left side.

Important

- This function is not available for certain **Media Type** settings.

Brightness

Adjusts the brightness of your print. You cannot change the levels of pure white and black. However, the brightness of the colors between white and black can be changed. Moving the slider to the right brightens (dilutes) the colors, and moving the slider to the left darkens (intensifies) the colors. You can also directly enter brightness values that are linked to the slider bar. Enter a value in the range from -50 to 50.

Contrast

Adjusts the contrast between light and dark in the image to be printed.
Moving the slider to the right increases the contrast, moving the slider to the left decreases the contrast.
You can also directly enter a value linked to the slider. Enter a value in the range from -50 to 50.

Matching Tab

Allows you to select the method for adjusting colors to match the type of document to be printed.

Color Correction

Allows you to select **Driver Matching**, **ICM**, or **None** to match the purpose of the print operation.

Driver Matching

With Canon Digital Photo Color, you can print sRGB data with color tints that most people prefer.

ICM

Adjusts the colors by using an ICC profile when printing.
Specify the input profile, printer profile, and rendering intent to be used.

Important

- If the application software is set so that ICM is disabled, **ICM** is unavailable for **Color Correction** and the printer may not be able to print the image data properly.

None

Disables color adjustment with the printer driver. Select this value when you are specifying an individually created printing ICC profile in an application software to print data.

Input Profile

Specifies the input profile to be used when you select **ICM** for **Color Correction**.

Standard

The standard printer profile (sRGB), which supports the color space of ICM, is used. This is the default setting.

Printer Profile

Specifies the printer profile to be used when **ICM** is selected for **Color Correction**.
Normally **Auto** is selected but you can also select a printer profile manually.

Rendering Intent

Specifies the matching method to be used when you select **ICM** for **Color Correction**.

Saturation

This method reproduces images even more vividly than the **Perceptual** method.

Perceptual

This method reproduces images by focusing on colors that most people find desirable. Select this method to print photos.

Relative Colorimetric

When image data is converted to the color space of the printer, this method converts the image data so the color reproduction approximates the shared color regions. Select this method to print image data with colors that are close to the original colors.

The white spots are reproduced as white spots (background color) on the paper.

Absolute Colorimetric

This method uses the white spot definitions in the input and output ICC profiles to convert the image data.

Although the color and color balance of the white spots change, you may not be able to get the desired output results because of the profile combination.

Important

- Depending on the media type, you may obtain the same print results even when you change the **Rendering Intent** setting.

Clear Coating Tab

Specify Clear Coating settings.

When you perform clear coating, the printer applies chroma optimizer (CO) ink onto the printing surface and allows you to adjust the glossiness.

Clear Coating

Set the clear coating area.

Note

- The available menu items differ depending on the paper type and print quality.

Auto

The printer automatically sets the areas to be clear-coated and whether clear coating is to be performed.

Overall

The printer clear-coats the entire area, including the margins outside the image area.

Clear-coating the entire area improves the overall glossiness, including the margins.

This option uses the most Chroma Optimizer (CO) ink.

Printed Areas

Use this option when you want to improve the glossiness only in the image area.

White areas (including margins) are not clear-coated.

None

Printing will proceed without clear coating.
Compared to if clear coating is applied, the image quality may deteriorate, or the printed surface may be damaged.

Note

- Chroma Optimizer (CO) ink is used during automatic maintenance to maintain printer performance.

Switching the Paper Source to Match the Purpose

In this printer, there are two paper sources, a manual feed tray and a top feed.
You can facilitate printing by selecting a paper source setting that matches your media type or purpose.

The procedure for setting paper source is as follows:

You can also set the paper source on the **Basic Settings** tab.

1. Open the printer driver setup window

2. Select the media type

   Select the type of paper loaded in the printer from the **Media Type** list on the **Media/Quality** tab.

3. Select the paper source

   From the **Paper Source** list, select the paper source that matches your purpose.

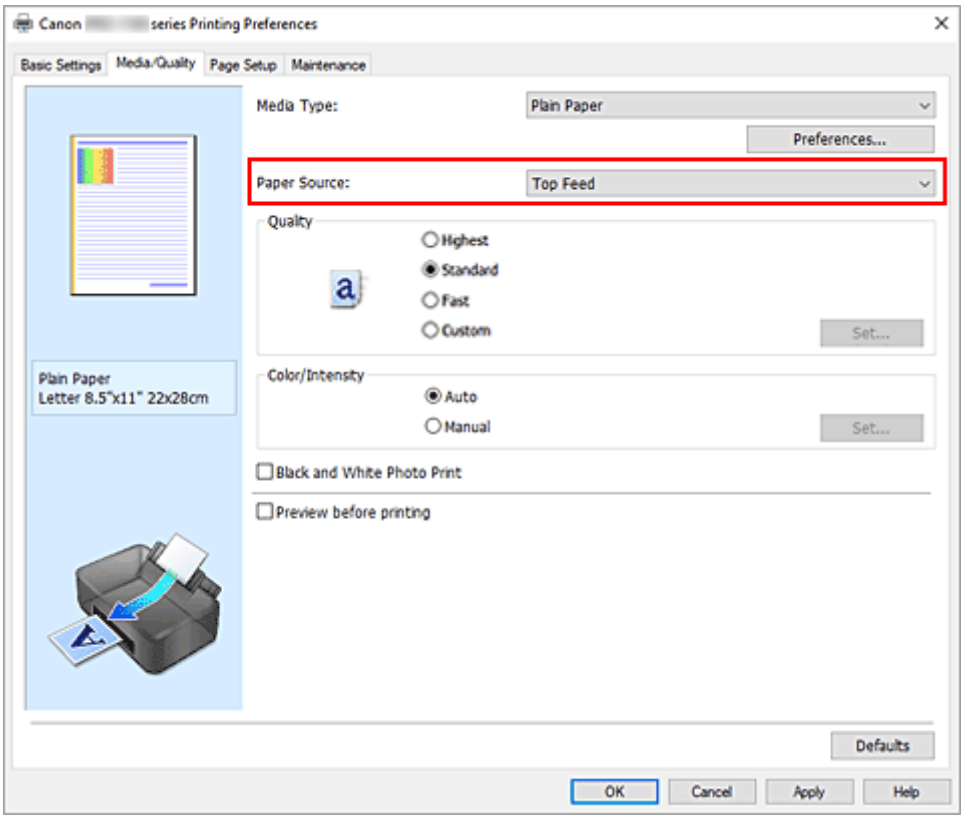

Manual Feed

Paper is supplied from the manual feed tray in the back.

Important

- When **2L 127x178mm**, **4"x6" 10x15cm**, **7"x10" 18x25cm**, **A5**, **B5**, **L 89x127mm**, **Hagaki 100x148mm**, **Hagaki 2 200x148mm**, **5"x7" 13x18cm**, or **Square 5"x5" 13x13cm** is selected for **Page Size** on the **Page Setup** tab, paper cannot be supplied from the manual feed tray in the back.
- When **Plain Paper**, **Hagaki A**, **Ink Jet Hagaki**, or **Hagaki** is selected for **Media Type** on the **Media/Quality** tab, paper cannot be supplied from the manual feed tray in the back.

Top Feed

Paper is fed from the top feed.

Important

- When **Heavyweight Photo Paper**, **Baryta Photo Paper**, **Premium Fine Art Smooth**, **Premium Fine Art Rough**, **Photo Paper Pro Premium Matte A**, **Extra Heavyweight Fine Art Paper**, or **Highest Density Fine Art Paper** is selected for **Media Type** on the **Media/Quality** tab, paper cannot be supplied from the top feed.

4. Click **OK**

When you perform print, the printer uses the specified paper source to print the data.

Note

- If the paper settings in the printer driver differ from the paper information registered on the printer, an error may occur. For instructions on what to do if an error occurs, see "Register Paper Information."
  For details about the paper information to be registered on the printer, see the following:
  - Paper Settings on the Printer Driver and the Printer (Media Type)
  - Paper Settings on the Printer Driver and the Printer (Paper Size)

Grayscale Printing

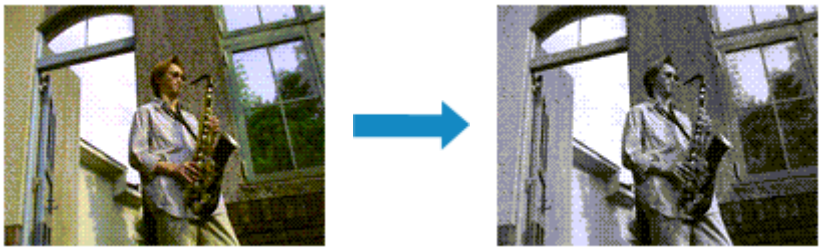

This section describes the procedure for printing a color document or monochrome photo in grayscale.
To print in grayscale, you can either use color ink for subtle color adjustments, or use only black or gray ink to print monochrome photos the way you want them.
When printing in grayscale using only black or gray ink, you cannot adjust grayscale color tones.

- Grayscale Printing Using Color Ink
- Grayscale Printing Using Only Black and Gray Ink

Grayscale Printing Using Color Ink

1. Open the printer driver setup window

2. Set black and white photo printing

   Check the **Black and White Photo Print** check box on the **Media/Quality** tab.

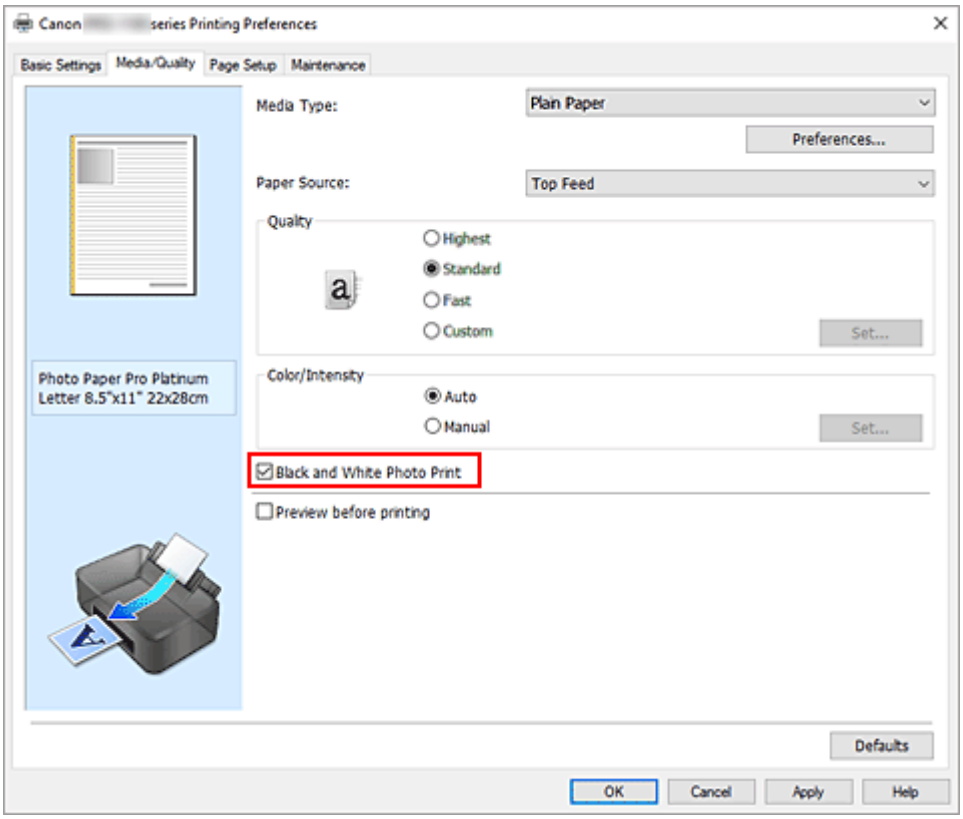

3. Complete the setup

   Click **OK**.

   When you perform print, the document is converted to grayscale data. It allows you to print the color document in monochrome.

Important

- When the **Black and White Photo Print** check box is checked, the printer driver processes image data as sRGB data. In this case, actual colors printed may differ from those in the original image data.
  When using the grayscale printing function to print Adobe RGB data, convert the data to sRGB data using an application software.

Grayscale Printing Using Only Black and Gray Ink

To print in grayscale using only black and gray ink, you need to add **Photo Paper (Grayscale Printing)** or **Fine Art Paper (Grayscale Print)** as a new paper typeusing the Media Configuration Tool in advance, and update the printer driver's media information by selecting **Update Media Information** from the **Maintenance** tab.

1. Open the printer driver setup window

2. Select the media type

   Select **Photo Paper (Grayscale Printing)** or **Fine Art Paper (Grayscale Print)** in **Media Type** in the **Basic Settings** tab.

3. Complete the setup

   Click **OK**.

   When you perform print, the document is converted to grayscale data. It allows you to print the color document in monochrome.

Related Topic

➡ Adjusting Tone

Adjusting Tone

When printing black and white photos, you can produce the cooling effects of cool colors and the warming effects of warm colors.



Cool Tone is selected



Black and White is selected



Warm Tone is selected

Note

- If you select **Photo Paper (Grayscale Printing)** or **Fine Art Paper (Grayscale Print)** in Media Type in the **Basic Settings** tab, you cannot adjust grayscale color tones.

1. Open the printer driver setup window

2. Select the media type

   For **Media Type** on the **Media/Quality** tab, select **Photo Paper Plus Glossy II A**, **Photo Paper Pro Platinum**, **Photo Paper Pro Luster**, **Photo Paper Plus Semi-gloss**, **Photo Paper Pro Crystal Grade**, **Lightweight Photo Paper**, **Heavyweight Photo Paper**, **Photo Paper (Long-form Printing)**, **Baryta Photo Paper**, **Premium Fine Art Smooth**, **Premium Fine Art Rough**, **Photo Paper Pro Premium Matte A**, **Heavyweight Fine Art Paper**, **Extra Heavyweight Fine Art Paper**, **Highest Density Fine Art Paper**, **Fine Art Paper (Long-form Print)**, **Canvas**, or **Japanese Paper Washi**.

3. Set black and white photo printing

   Check the **Black and White Photo Print** check box.

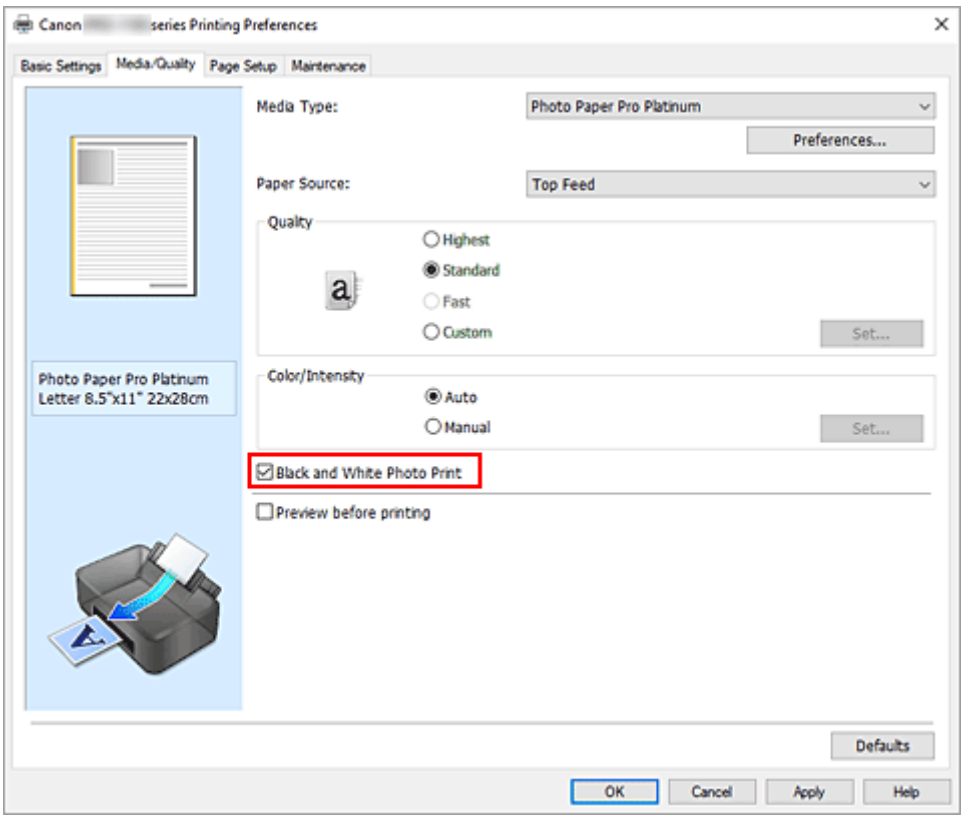

4. Select the manual color adjustment

Select **Manual** for **Color/Intensity**, and click **Set...**.

The **Manual Color Adjustment** dialog box opens.

5. Adjusting monochrome tones

From the **Tone** pull-down menu, specify any of the following items.

Cool Tone

This item adjusts color tones to cool shades of gray (cool black). When you select this item, a value of -30 is entered for **X**, and a value of 0 for **Y**.

Black and White

This item adjusts color tones to neutral shades of gray. When you select this item, a value of 0 is entered for **X**, and a value of 0 for **Y**.

Warm Tone

This item adjusts color tones to warm shades of gray (warm black). When you select this item, a value of 30 is entered for **X**, and a value of 0 for **Y**.

Custom

You can adjust the color tones by using the horizontal and vertical sliders while checking the colors in the center adjustment area.

Adjust the horizontal and vertical sliders by dragging them to the left/right or up/down, respectively. You can also adjust color tones by clicking or dragging the center adjustment area with the mouse. You can also directly enter values that are linked to the sliders. When you enter values, set values in the range of -100 to 100 for **X**, and -50 to 50 for **Y**.

Note

- **Custom** cannot be selected since it is displayed automatically when the adjustment value is directly entered.

X, Y (Monochromatic adjustment value)

If necessary, you can adjust monochromatic colors manually.
To adjust the color tones, either enter values directly or click the up/down arrows.
You can also adjust the color tones by clicking or dragging the adjustment area with the mouse.
The value is also linked to the horizontal and vertical sliders.
When you enter values, set values in the range of -100 to 100 for **X**, and -50 to 50 for **Y**.
The selected value will be shown in the preview on the left side.

After adjusting the tones, click **OK**.

6. Complete the setup

Click **OK** on the **Media/Quality** tab.
When you perform print, the color document is converted to grayscale data with adjusted tones. It allows you to print the color document in monochrome.

Related Topics

- Grayscale Printing
- Adjusting Brightness
- Adjusting Contrast

Specifying Color Correction

You can specify the color correction method suited to the type of document to be printed.
Normally, when data is printed, the printer driver automatically adjusts the colors.

When you want to print by using the color space of the image data effectively, select **ICM**. When you want to use an application software to specify a printing ICC profile, select **None**.

You can also set the color correction in **Color/Intensity Manual Adjustment** in the **Basic Settings** tab.

1. Open the printer driver setup window

2. Select the manual color adjustment

   On the **Media/Quality** tab, select **Manual** for **Color/Intensity**, and click **Set...**.

   The **Manual Color Adjustment** dialog box opens.

3. Select color correction

   Click the **Matching** tab. Select the **Color Correction** method for the color that matches the document type that you are printing, and then click **OK**.

4. Complete the setup

   Click **OK** on the **Media/Quality** tab.
   When you perform print, the document data is printed with the specified color correction.

Important

- When ICM is disabled in the application software, **ICM** is unavailable for **Color Correction** and the printer may not be able to print the image data properly.

Related Topics

- Optimal Photo Printing of Image Data
- Adjusting Colors with the Printer Driver
- Printing with ICC Profiles
- Interpreting the ICC Profile

Optimal Photo Printing of Image Data

When people print images taken with digital cameras, they sometimes feel that the printed color tones differ from those of actual image or those displayed on the monitor.
To get the print results as close as possible to the desired color tones, you must select a printing method that is best suited to the application software used or to your purpose.

Color Management

Devices such as digital cameras, scanners, monitors, and printers handle color differently. Color management (color matching) is a method that manages device-dependent "colors" as a common color space.

For Windows, a color management system called "ICM" is built into the operating system.
sRGB is one of the common color spaces that is frequently used.

ICC profiles convert device-dependent "colors" into a common color space. By using an ICC profile and carrying out color management, you can draw out the color space of the image data within the color reproduction area that the printer can express.

Note

- Normally, image files are saved in JPEG format. Some digital cameras allow you to save images in a format called RAW. RAW data refers to an image saving format that requires a computer to develop the image. You can embed an input ICC profile tag into a RAW file by using special application software.

Selecting a Printing Method Suited to the Image Data

The recommended printing method depends on the color space of the image data or the application software to be used.

There are two typical printing methods.
Check the color space of the image data and the application software to be used, and then select the printing method suited to your purpose.

Adjusting Colors with the Printer Driver

This section describes the procedure for printing data by using the color correction function of the printer driver.
Select this function when you want to print impressions that are close to those displayed on the monitor, for example, if you corrected the colors while checking the print image on the monitor.

Printing with ICC Profiles

Describes the procedure for printing by using the color space of the image data effectively.
You can print with a common color space by setting up the application software and the printer driver so that the color management matches the input ICC profile of the image data.
The method for setting up the printer driver differs depending on the application software to be used.

Related Topic

- Interpreting the ICC Profile

Adjusting Colors with the Printer Driver

To use driver matching when printing, turn on the printer driver's color correction function.
Driver matching accurately applies the characteristics of data displayed on the monitor and allows you to obtain print results of impressions that are close to those displayed on the monitor.

Important

- When printing using driver matching, Canon recommends that you set the monitor and the environment light as follows:
  - Monitor
    Color temperature: D50 (5000K)
    Brightness: 100 to 120cd/m2
    Gamma: 2.2
  - Environment light
    Fluorescent light for D50 color evaluation (color temperature 5000K, high color rendering properties)
    Brightness when looking at printed materials: 500 lx ± 125 lx

Note

- When printing from an application software that can identify ICC profiles and allows you to specify them, use a printing ICC profile in the application software, and select settings for color management.

1. Open the printer driver setup window

2. Select the manual color adjustment

   On the **Media/Quality** tab, select **Manual** for **Color/Intensity**, and click **Set...**.
   The **Manual Color Adjustment** dialog box opens.

3. Select color correction

   Click **Matching** tab, and select **Driver Matching** for **Color Correction**.

4. Set the other items

   If necessary, click **Color Adjustment** tab, and adjust the color balance (**Cyan**, **Magenta**, **Yellow**) and adjust **Brightness** and **Contrast** settings, and then click **OK**.

5. Complete the setup

   Click **OK** on the **Media/Quality** tab.
   When you print, the colors get adjusted by the printer driver when printing the data.

Related Topics

- Adjust Colors
- Specifying Color Correction
- Adjusting Brightness

➡ Adjusting Contrast

Printing with ICC Profiles

When the image data has a specified input ICC profile, you can print by using the color space of the data effectively.

The printer driver setting procedure varies depending on the application software used to print.

Specify an ICC Profile from the Application Software and Print the Data

When you print the editing and touch-up results of Adobe Photoshop, Canon Digital Photo Professional, or any application software that allows you to specify input and printing ICC profiles, you print by effectively using the color space of the input ICC profile specified in the image data.

To use this printing method, use your application software to select color management items and specify an input ICC profile and a printing ICC profile in the image data.
Even if you print using a printing ICC profile that you created yourself or one for special Canon paper, be sure to select color management items from your application software.
For instructions, refer to the manual of the application software you are using.

1. Open the printer driver setup window

2. Select the manual color adjustment

   On the **Media/Quality** tab, select **Manual** for **Color/Intensity**, and click **Set...**.
   The **Manual Color Adjustment** dialog box opens.

3. Select color correction

   Click **Matching** tab, and select **None** for **Color Correction**.

4. Set the other items

   If necessary, click **Color Adjustment** tab, and adjust the color balance (**Cyan**, **Magenta**, **Yellow**) and adjust **Brightness** and **Contrast** settings, and then click **OK**.

5. Complete the setup

   Click **OK** on the **Media/Quality** tab.
   When you perform print, the printer uses the color space of the image data.

Specify an ICC Profile with the Printer Driver, and then Print

Print from an application software that cannot identify input ICC profiles or does not allow you to specify one by using sRGB as the color space of the data.

1. Open the printer driver setup window

2. Select the manual color adjustment

On the **Media/Quality** tab, select **Manual** for **Color/Intensity**, and click **Set...**.
The **Manual Color Adjustment** dialog box opens.

3. Select color correction

Click **Matching** tab, and select **ICM** for **Color Correction**.

4. For **Input Profile**, select **Standard**

Important

- When the application software specifies an input profile, the input profile setting of the printer driver becomes invalid

5. Select the printer profile

Select **Printer Profile**.

- To set the printer profile automatically:

  Select **Auto**.
- To set the printer profile manually:

  Select a printer profile that matches the media type to be used.

6. Select the rendering intent

Select the coloring adjustment method in **Rendering Intent**.

- **Saturation**

  This method reproduces images even more vividly than the **Perceptual** method.
- **Perceptual**

  This function effectively prints the color space that the printer can reproduce. Because this function accurately renders the attributes of the data displayed on the monitor, select this function when you want to print with impressions that are close to those displayed on the monitor.

  Important

  - When you select **Perceptual** to print images, Canon recommends that you set the monitor and the environment light as follows:
    - Monitor
      Color temperature: D50 (5000K)
      Brightness: 100 to 120cd/m2
      Gamma: 2.2
    - Environment light
      Fluorescent light for D50 color evaluation (color temperature 5000K, high color rendering properties)
      Brightness when looking at printed materials: 500 lx ± 125 lx
- **Relative Colorimetric**

  When image data is converted to the color space of the printer, this method converts the image data so the color reproduction approximates the shared color regions. Select this method to print image data with colors that are close to the original colors.

- **Absolute Colorimetric**

  When **Relative Colorimetric** is selected, white spots are reproduced as white spots of the paper (background color). However, when **Absolute Colorimetric** is selected, how the white spots are reproduced depends on the image data.

Important

- Depending on the media type, you may obtain the same print results even when you change the **Rendering Intent** setting.

7. Set the other items

If necessary, click **Color Adjustment** tab, and adjust the color balance (**Cyan**, **Magenta**, **Yellow**) and adjust **Brightness** and **Contrast** settings, and then click **OK**.

8. Complete the setup

Click **OK** on the **Media/Quality** tab.
When you perform print, the printer uses the color space of the image data.

Related Topics

- Adjust Colors
- Specifying Color Correction
- Adjusting Brightness
- Adjusting Contrast

Interpreting the ICC Profile

When you need to specify an ICC profile for this printer, specify the ICC profile of the print output media.

The ICC profiles installed for this printer appear as follows.

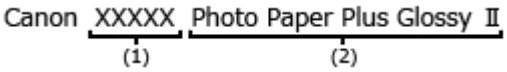

- (1) : Printer model
- (2) : Media type
  This media name corresponds to the following media type:
  Baryta Photo Paper: Baryta Photo Paper
  Canvas -P: Canvas
  Extra Heavyweight Fine Art Paper: Extra Heavyweight Fine Art Paper
  Heavyweight Fine Art Paper: Heavyweight Fine Art Paper
  Heavyweight Photo Paper: Heavyweight Photo Paper
  Highest Density Fine Art Paper: Highest Density Fine Art Paper
  Japanese Paper Washi -P: Japanese Paper Washi
  Lightweight Photo Paper: Lightweight Photo Paper
  Lightweight Photo Paper A: Lightweight Photo Paper A
  Lightweight Photo Paper B: Lightweight Photo Paper B
  Matte Photo Paper -P: Matte Photo Paper
  Photo Paper Pro Luster: Photo Paper Pro Luster
  Photo Paper Pro Platinum: Photo Paper Pro Platinum
  PhotoPaper Plus Semi-gloss: Photo Paper Plus Semi-gloss
  PhotoPaperPro CrystalGrade: Photo Paper Pro Crystal Grade
  Photo Paper Pro Premium Matte A: Photo Paper Pro Premium Matte
  Photo Paper Plus Glossy II A: Photo Paper Plus Glossy II
  Premium Fine Art Rough: Premium Fine Art Rough
  Premium Fine Art Smooth: Premium Fine Art Smooth

Note

- For ICC profiles that display "-P" at the end of the media type, the print results are the same when you set **Rendering Intent** to **Perceptual** or **Relative Colorimetric**.

Adjust Colors

You can adjust the color tints when printing.
Since this function adjusts color balance of the output by changing the ink ratios of each color, it changes the total color balance of the document. Use the application software when you want to change the color balance significantly. Use the printer driver only when you want to adjust the color balance slightly.
The following sample shows the case when color balance is used to intensify cyan and to diminish yellow so that the overall colors are more uniform.



No adjustment



Adjust color balance

You can also set the color balance in **Color/Intensity Manual Adjustment** in the **Basic Settings** tab.

1. Open the printer driver setup window

2. Select the manual color adjustment

   On the **Media/Quality** tab, select **Manual** for **Color/Intensity**, and click **Set...**.

   The **Manual Color Adjustment** dialog box opens.

3. Adjust color balance

   There are individual sliders for **Cyan**, **Magenta**, and **Yellow**. Each color becomes stronger when the corresponding slider is moved to the right, and becomes weaker when the corresponding slider is moved to the left. For example, when cyan becomes weaker, the color red becomes stronger.
   You can also directly enter a value linked to the slider. Enter a value in the range from -50 to 50. The current settings are displayed in the settings preview on the left side of the printer driver.

   After adjusting each color, click **OK**.

4. Complete the setup

   Click **OK** on the **Media/Quality** tab.
   When you perform print, the document is printed with the adjusted color balance.

Important

- When the **Black and White Photo Print** check box on the **Media/Quality** tab is checked, the color balance (**Cyan**, **Magenta**, **Yellow**) cannot be set.

Related Topics

- Specifying Color Correction
- Adjusting Brightness
- Adjusting Contrast

Adjusting Brightness

You can brighten or darken the colors of the overall image data during printing.
The following sample shows the case when light colors are darkened when the image data is printed.



No adjustment



Darken light colors

You can also set brightness on the **Basic Settings** tab by choosing **Color/Intensity Manual Adjustment**.

1. Open the printer driver setup window

2. Select the manual color adjustment

   On the **Media/Quality** tab, select **Manual** for **Color/Intensity**, and click **Set...**.

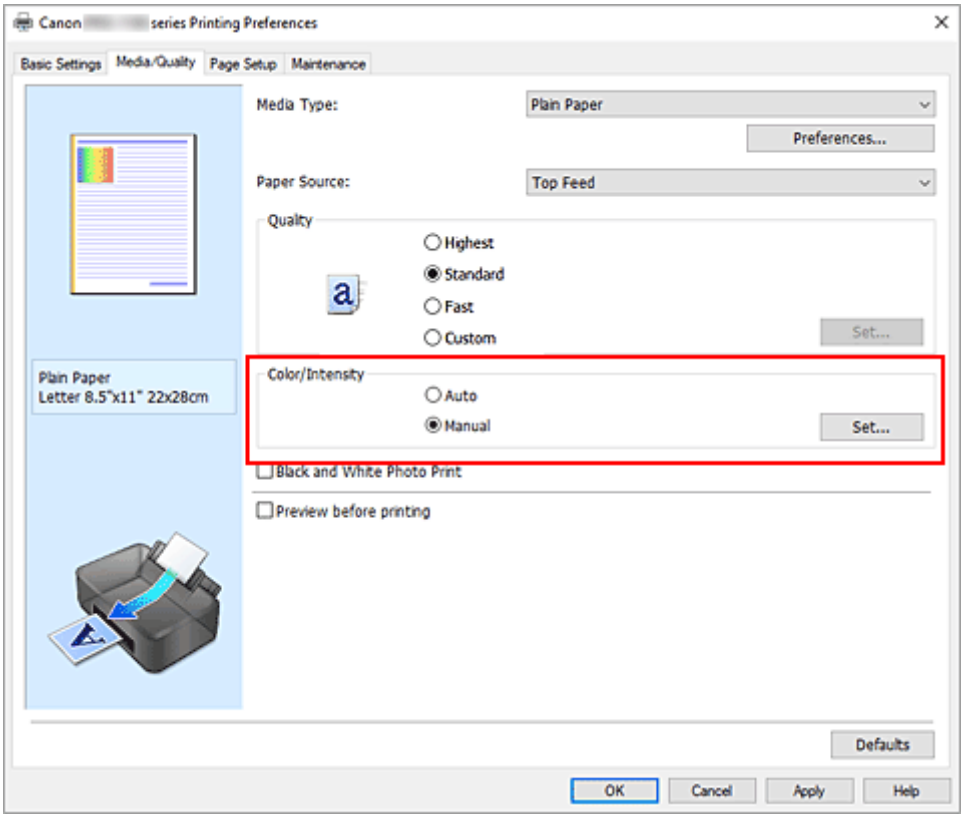

   The **Manual Color Adjustment** dialog box opens.

3. Adjust brightness

   Moving the **Brightness** slider to the right brightens (dilutes) the colors, and moving the slider to the left darkens (intensifies) the colors.

You can also directly enter a value linked to the slider. Enter a value in the range from -50 to 50. The current settings are displayed in the settings preview on the left side of the printer driver.

After adjusting the brightness, click **OK**.

4. Complete the setup

Click **OK** on the **Media/Quality** tab.
When you perform print, the data is printed at the adjusted brightness.

Related Topics

- Specifying Color Correction
- Adjust Colors
- Adjusting Contrast

Adjusting Contrast

You can adjust the image contrast during printing.
To make the differences between the light and dark portions of images greater and more distinct, increase the contrast. On the other hand, to make the differences between the light and dark portions of images smaller and less distinct, reduce the contrast.



No adjustment　　Adjust the contrast

You can also set the contrast in **Color/Intensity Manual Adjustment** in the **Basic Settings** tab.

1. Open the printer driver setup window

2. Select the manual color adjustment

   On the **Media/Quality** tab, select **Manual** for **Color/Intensity**, and click **Set...**.

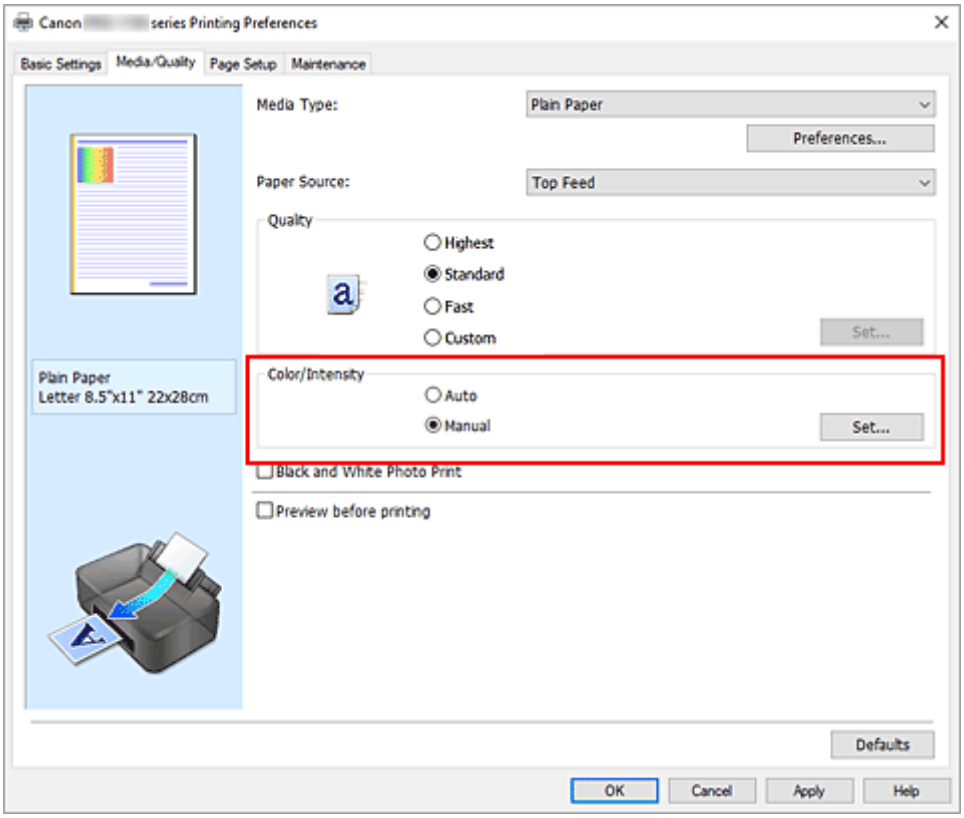

   The **Manual Color Adjustment** dialog box opens.

3. Adjust the contrast

Moving the **Contrast** slider to the right increases the contrast, and moving the slider to the left decreases the contrast.
You can also directly enter a value linked to the slider. Enter a value in the range from -50 to 50. The current settings are displayed in the settings preview on the left side of the printer driver.

After adjusting the contrast, click **OK**.

4. Complete the setup

Click **OK** on the **Media/Quality** tab.
When you perform print, the image is printed with the adjusted contrast.

Related Topics

- Specifying Color Correction
- Adjust Colors
- Adjusting Brightness

Changing the Clear Coating Settings

When you perform clear coating, the printer applies chroma optimizer (CO) ink onto the printing surface and allows you to adjust the glossiness.

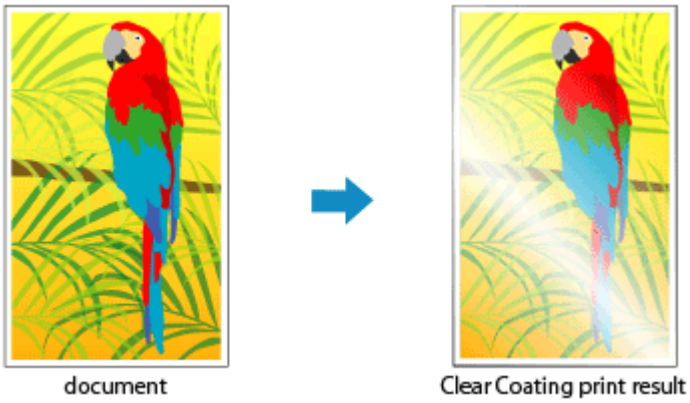

1. Open the printer driver setup window

2. Select the manual color adjustment

   On the **Media/Quality** tab, select **Manual** for **Color/Intensity**, and click **Set...**.

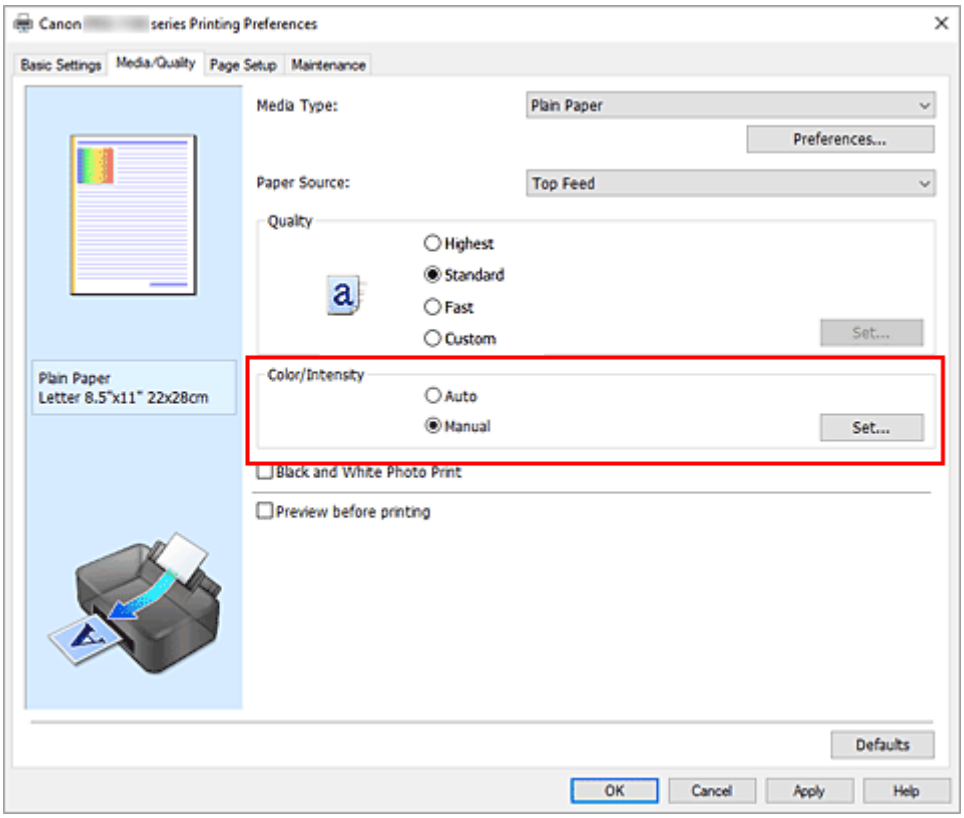

   The **Manual Color Adjustment** dialog box opens.

3. Configure clear-coating

Click the **Clear Coating** tab, select the **Clear Coating** item that matches your purpose (see below for the selections), and then click **OK**.

Note

- The available menu items differ depending on the paper type and print quality.

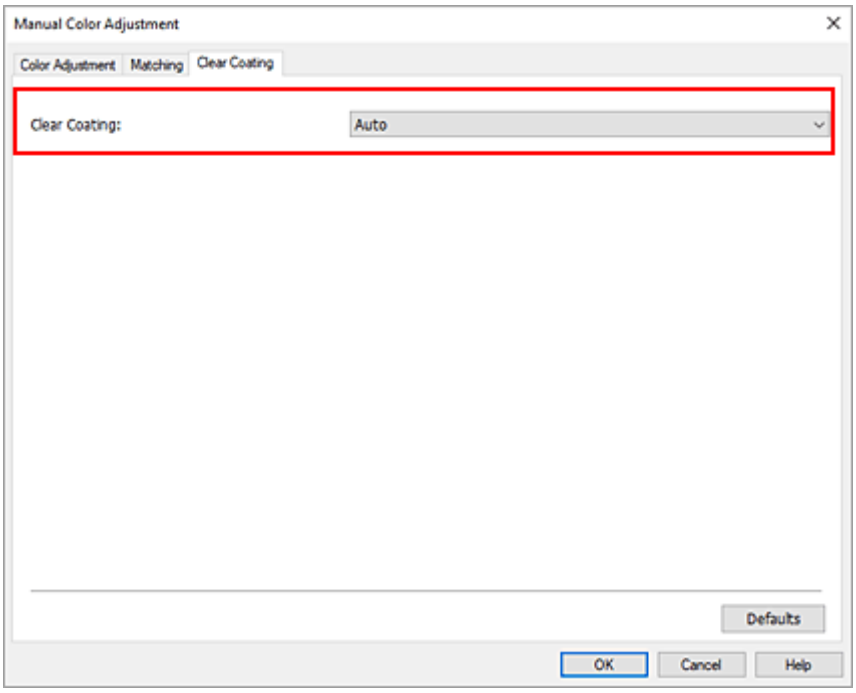

Auto

The printer automatically sets the areas to be clear-coated and whether clear coating is to be executed.

Overall

The printer clear-coats the entire area, including the margins outside the image area.
Clear-coating the entire area improves the overall glossiness, including the margins.
This option uses the most Chroma Optimizer (CO) ink.

Printed Areas

Use this option when you want to improve the glossiness only in the image area.
White areas (including margins) are not clear-coated.

None

Printing will proceed without clear coating.
Compared to if clear coating is applied, the image quality may deteriorate, or the printed surface may be damaged.

Note

- Select **None** if clear-coating is not required, such as when laminating after printing.

Important

- On the Basic Settings or **Media/Quality** tab, look at **Media Type**. If a media type other than **Photo Paper Pro Premium Matte A**, **Photo Paper Pro Platinum**, **Photo Paper Pro Luster**, **Photo Paper Plus Semi-gloss**, **Lightweight Photo Paper**, **Heavyweight Photo Paper**, **Photo Paper (Long-form Printing)**, or **Baryta Photo Paper** is selected, you can select **Auto** only.

4. Click **OK**

When printing is executed, the clear coating effect that was set is added when the document is printed.

Important

- The decorative effects of clear coating may diminish depending on the document to be clear coated.
- Selecting **Black and White Photo Print** on the **Basic Settings** or **Media/Quality** tab may diminish the decorative effects of clear coating.

Set the Layout of Printed Documents (Page Setup Tab)

- Page Setup Tab Description
- Setting the Number of Copies and Printing Order
- Perform Borderless Printing
- Page Layout Printing
- Tiling/Poster Printing
- Booklet Printing
- Duplex Printing
- Perform Long-form Printing
- Printing on Postcards
- Print Using Washi
- Setting Paper Dimensions (Custom Size)

Page Setup Tab Description

The **Page Setup** tab allows you to determine how a document is to be arranged on the paper. Also, this tab allows you to set the number of copies and the order of printing. If the application which created the document has a similar function, set them with the application.

- Settings Preview
- Page Size
- Printer Paper Size
- Copies
- Print from Last Page
- Collate
- Orientation
- Rotate 180 degrees
- Borderless Printing
- Page Layout
- Zoom
- 1-sided/2-sided/Booklet Printing
- Binding Location
- Specify Margin
- Print Options
- Stamp

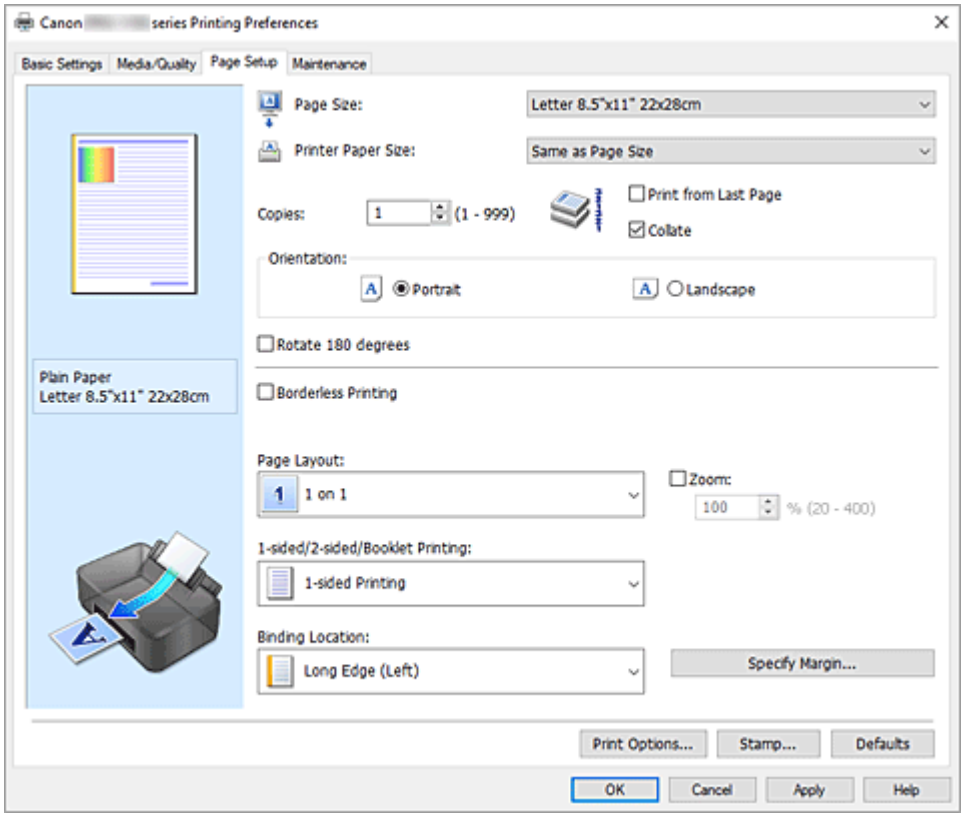

Settings Preview

The paper illustration shows how the original will be laid out on a sheet of paper. You can check an overall image of the layout.

The printer illustration shows how to load paper to match the printer driver settings.
Check whether the printer is set up correctly by looking at the illustration before you start printing.

Page Size

Selects a page size.
Ensure that you select the same page size as you selected within the application.
If you select **Custom...**, the **Custom Paper Size** dialog box opens and allows you to specify any vertical and horizontal dimensions for the paper size.

Printer Paper Size

Selects the size of paper actually loaded into the printer.
The default setting is **Same as Page Size** to perform normal-sized printing.
If you select a paper size that is smaller than the **Page Size**, the document size will be reduced. If you select a paper size that is larger, the document size will be enlarged.
Also if you select **Custom...**, the **Custom Paper Size** dialog box opens and allows you to specify any vertical and horizontal dimensions for the paper size.

Copies

Specifies the number of copies you want to print. You can specify a value from 1 to 999.

Important

- If the application used to create your document has a similar function, specify the number of copies with the application without specifying it here.

Print from Last Page

Check this check box when you want to print from the last page in order. If you do this, you do not need to sort the pages into their correct order after printing.
Uncheck this check box to print your document in normal order, starting from the first page.

Collate

Check this check box to group together the pages of each copy when you want to print multiple copies.
Uncheck this check box when you want to print with all pages of the same page number grouped together.

Important

- When the application software that you used to create the document has the same function, give priority to the printer driver settings. However, if the print results are not acceptable, specify the function settings on the application software. When you specify the number of copies and the printing order with both the application and this printer driver, the number of copies may be multiplied numbers of the two settings or the specified printing order may not be enabled.

Orientation

Selects the printing orientation.
If the application used to create your document has a similar function, select the same orientation that you selected in that application.

Portrait

Prints the document so that its top and bottom positions are unchanged relative to the paper feed direction. This is the default setting.

Landscape

Prints the document by rotating it 90 degrees relative to the paper feed direction.
You can change the rotation direction by going to the **Maintenance** tab, opening the **Custom**

Settings dialog box, and then using **Rotate 90 degrees left when orientation is [Landscape]** check box.

To rotate the document 90 degrees to the left when printing, select the **Rotate 90 degrees left when orientation is [Landscape]** check box.

Rotate 180 degrees

Prints the document by rotating it 180 degrees against the paper feed direction.

The width of print area and the amount of extension that are configured in other application software will be reversed vertically and horizontally.

Borderless Printing

Chooses whether you are printing on a full page without any page margins or printing with page margins.

In borderless printing, originals are enlarged to extend slightly off the paper. Thus, printing can be performed without any margins (border).

Use **Amount of Extension** to adjust how much of the document extends off the paper during borderless printing.

Amount of Extension

Adjusts how much of the document extends off the paper during borderless printing.

Moving the slider to the right increases the amount of extension and allows you to perform borderless printing with no problems.

Moving the slider to the left reduces the amount of extension and expands the range of the document to print.

Page Layout

Selects the size of the document you want to print and the type of printing.

1 on 1 to 16 on 1

Multiple pages of document can be printed on one sheet of paper. To change the page order, click **Preferences...**. In the **Page Layout Printing** dialog box that appears, specify **Page Order**.

Poster (1 x 2) to Poster (4 x 4)

This function enables you to enlarge the image data and divide the enlarged data into several pages to be printed.

You can also glue together these sheets of paper to create large printed matter, such as a poster.

Preferences...

Opens the **Poster Printing** dialog box.

Click this button to set details on poster printing.

Zoom

Specifies an enlargement or reduction ratio for the document you want to print.

1-sided/2-sided/Booklet Printing

1-sided Printing

Select when performing single-sided printing.

2-sided Printing (Manual)

Select when performing duplex printing.

Booklet Printing (Manual)

The booklet printing function allows you to print data for a booklet. Data is printed on both sides of the paper. This type of printing ensures that pages can be collated properly, in page number order, when the printed sheets are folded and stapled at the center.

Preferences...

Opens the **Booklet Printing** dialog box. Click this button to set details on booklet printing.

Binding Location

Selects the stapling margin position.

The printer analyzes the **Orientation** and **Page Layout** settings, and automatically selects the best stapling margin position. Check **Binding Location**, and select from the list to change it.

Specify Margin...

Opens the **Specify Margin** dialog box. You can specify the width of the margin.

Print Options...

Opens the **Print Options** dialog box.

Changes detailed printer driver settings for print data that is sent from applications.

Stamp...

Opens the **Stamp** dialog box.

The **Stamp** function allows you to print a stamp text or a bitmap over or behind document data. It also allows you to print date, time and user name.

Depending on the environment, **Stamp** may not be available.

Defaults

Restores all the settings you have changed to their default values.

Clicking this button restores all the settings on the current screen to their default values (factory settings).

Custom Paper Size dialog box

This dialog box allows you to specify the size (width and height) of the custom paper.

Units

Select the unit for entering a user-defined paper size.

Paper Size

Specifies the **Width** and the **Height** of the custom paper. Measurement is shown according to the units specified in **Units**.

Page Layout Printing dialog box

This dialog box allows you to select the number of document pages to be placed on one sheet of paper, the page order, and whether a page border line is to be printed around each document page.
The settings specified in this dialog box can be confirmed in the settings preview on the printer driver.

Page Order

Specifies the document orientation to be printed on a sheet of paper.

Page Border

Prints a page border line around each document page.

Check this check box to print the page border line.

Exclude single page documents from Page Layout Printing

If you add a checkmark, single-page documents are printed on a single sheet without performing Page Layout Printing.

Poster Printing dialog box

This dialog box allows you to select the size of the image to be printed. You can also make settings for cut lines and paste markers which are convenient for pasting together the pages into a poster.
The settings specified in this dialog box can be confirmed in the settings preview on the printer driver.

Print "Cut/Paste" in margins

Specifies whether to print the words "Cut" and "Paste" in the margins. These words serve as guidelines for pasting together the pages into a poster.
Check this check box to print the words.

Note

- Depending on the environment of the printer driver you are using, this function may not be available.

Print "Cut/Paste" lines in margins

Specifies whether to print cut lines that serve as guidelines for pasting together the pages into a poster.
Check this check box to print the cut lines.

Print page range

Specifies the printing range. Select **All** under normal circumstances.
Select **Pages** to specify a specific page or range.

Note

- If some of the pages have not been printed well, specify the pages that do not need to be printed by clicking them in the settings preview of the **Page Setup** tab. Only the pages shown on the screen will be printed this time.

Booklet Printing dialog box

This dialog box allows you to set how to bind the document as a booklet. Printing only on one side and printing a page border, can also be set in this dialog box.
The settings specified in this dialog box can be confirmed in the settings preview on the printer driver.

Preview Icon

Shows the settings made on the **Booklet Printing** dialog box.
You can check what the document will look like when printed as a booklet.

Margin for stapling

Specifies which side of the booklet is to be stapled.

Insert blank page

Selects whether to print the document on one side or both sides of the booklet.
Check this check box to print the document on one side of the booklet and select the side to be left blank from the list.

Margin

Specifies the width of the stapling margin.
The specified width becomes the stapling margin from the center of the sheet.

Page Border

Prints a page border line around each document page.
Check this check box to print the page border line.

Specify Margin dialog box

This dialog box allows you to specify the margin width for the side to be stapled. If a document does not fit on one page, the document is reduced when printed.

Margin

Specifies the width of the stapling margin.
The width of the side specified by **Binding Location** becomes the stapling margin.

Print Options dialog box

Makes changes to print data that is sent to the printer.

Depending on the environment, this function may not be available.

Disable ICM required from the application software

Disables the ICM function required from the application software.
When an application software uses Windows ICM to print data, unexpected colors may be produced or the printing speed may decrease. If these problems occur, checking this check box may resolve the problems.

Important

- Uncheck this check box under normal circumstances.
- This function does not work when **ICM** is selected for **Color Correction** on the **Matching** tab of the **Manual Color Adjustment** dialog box.

Disable the color profile setting of the application software

Checking this check box disables information in the color profile that was set on the application software.
When the information in the color profile set on the application software is output to the printer driver, the print result may contain unexpected colors. If this happens, checking this check box may resolve the problem.

Important

- Uncheck this check box under normal circumstances.
- Even when this check box is checked, only some of the information in the color profile is disabled, and the color profile can still be used for printing.

Disable the paper source setting of the application software

Disables the paper feed method that is set by the application.
With some applications such as Microsoft Word, the data may be printed with a feed method that differs from the printer driver setting. In this case, check this function.

Important

- When this function is enabled, normally the paper feeding method cannot be changed from the Canon IJ Preview.

Ungroup Papers

Sets the display method of **Media Type**, **Page Size**, and **Printer Paper Size**.

To display the items separately, select the check box.

To display the items as a group, clear the check box.

Do not allow application software to compress print data

Compression of the application software print data is prohibited.

If the print result has missing image data or unintended colors, selecting this check box may improve the condition.

Important

- Uncheck this check box under normal circumstances.

Print after creating print data by page

The print data is created in page units, and printing starts after the processing of one page of print data is complete.

If a printed document contains unintended results such as streaks, selecting this check box may improve the results.

Important

- Uncheck this check box under normal circumstances.

Cancel the safety margin regulation for paper size

Cancels the safety margin regulation when you set **Media Type** to **Matte Photo Paper**, **Premium Fine Art Smooth**, **Premium Fine Art Rough**, or **Photo Paper Pro Premium Matte A** on the **Media/ Quality** tab.

When you check this item, the safety margin regulation is canceled, printing in a wider print area and borderless full-page printing become possible, and printing can be performed for all paper sizes.

Important

- When the safety margin regulation is canceled, the paper may become smudged or the print quality may drop depending on the paper size used and the environment.
  If that happens, we recommend that you print on a paper size that has large margins.

Prevention of Print Data Loss

You can reduce the size of the print data that was created with the application software and then print the data.

Depending on the application software being used, the image data may be cut off or may not be printed properly. In such cases, select **On (Weak)** or **On (Strong)**.

Off

The printer prints data without using this function.

On (Weak)

The printer uses this function to print data only when the data quality is acceptable.

On (Strong)

The printer always uses this function to print data.

Important

- When using this function, the print quality may drop depending on the print data.

Unit of Print Data Processing

Selects the processing unit of the print data to be sent to the printer.

Select **Recommended** under normal circumstances.

Important

- A large amount of memory may be used for certain settings.
  Do not change the setting if your computer has a small amount of memory.

Stamp dialog box

Depending on the environment, **Stamp** may not be available.

The **Stamp** dialog box allows you to print a stamp over or behind the document pages. In addition to the pre-registered ones, you can register and use your original stamp.

Stamp

Stamp printing is a function that prints a stamp over a document.

Check this check box and select a title from the list to print a stamp.

Define Stamp...

Opens the **Stamp Settings** dialog box.

You can check the details of a selected stamp or save a new stamp.

Place stamp over text

Sets how the stamp is to be printed over the document.

Check the **Stamp** check box to enable this.

Check this check box to print a stamp over the printed document page. The printed data may be hidden behind the stamp.

Uncheck this check box to print the document data over the stamp. The printed data will not be hidden behind the stamp. However, the sections of the stamp that are overlapped by the document may be hidden.

Stamp first page only

Selects whether the stamp is to be printed on the first page only or on all pages when the document has two or more pages.

Check the **Stamp** check box to enable this.

Check this check box to print a stamp on the first page only.

Stamp Tab

The Stamp tab allows you to set the text and bitmap file (.bmp) to be used for a stamp.

Preview Window

Shows the status of the stamp configured in each tab.

Stamp Type

Specifies the stamp type.

Select **Text** to create a stamp with characters. Select **Bitmap** to create with a bitmap file. Select **Date/Time/User Name** to display the creation date/time and user name of the printed document.

The setting items in the **Stamp** tab change depending on the selected type.

- For **Text** registration, the characters must already be entered in **Stamp Text**. If necessary, change the **TrueType Font**, **Style**, **Size**, and **Outline** settings. You can select the color of the stamp by clicking **Select Color...**.
- For **Bitmap**, click **Select File...** and select the bitmap file (.bmp) to be used. If necessary, change the settings of the **Size** and **Transparent white area**.
- For **Date/Time/User Name**, the creation date/time and user name of the printed object are displayed in **Stamp Text**. If necessary, change the settings of **TrueType Font**, **Style**, **Size**, and **Outline**. You can select the color of the stamp by clicking **Select Color...**.

When **Stamp Type** is **Text** or **Date/Time/User Name**

Stamp Text

Specifies the stamp text string.
Up to 64 characters can be entered.
For **Date/Time/User Name**, the creation date/time and user name of the printed object are displayed in **Stamp Text**.

TrueType Font

Selects the font for the stamp text string.

Style

Selects the font style for the stamp text string.

Size

Selects the font size for the stamp text string.

Outline

Selects a frame that encloses the stamp text string.
If a large font size is selected for **Size**, characters may extend outside of the stamp border.

Color/Select Color...

Shows the current color for the stamp.
To select a different color, click **Select Color...** to open the **Color** dialog box, and select or create a color you wish to use as a stamp.

When **Stamp Type** is **Bitmap**

File

Specifies the name of the bitmap file to be used as the stamp.

Select File...

Opens the dialog box to open a file.
Click this button to select a bitmap file to be used as a stamp.

Size

Adjusts the size of the bitmap file to be used as a stamp.
Moving the slider to the right increases the size, moving the slider to the left decreases the size.

Transparent white area

Specifies whether to make white-filled areas of the bitmap transparent.
Check this check box to make white-filled areas of the bitmap transparent.

Note

- Click **Defaults** to set **Stamp Type** to text, **Stamp Text** to blank, **TrueType Font** to Arial, **Style** to Regular, **Size** to 36 points, **Outline** unchecked, and **Color** to gray with the RGB values (192, 192, 192).

Placement Tab

The Placement tab allows you to set the position where the stamp is to be printed.

Preview Window

Shows the status of the stamp configured in each tab.

Position

Specifies the stamp position on the page.

Selecting **Custom** from the list allows you to enter values for the **X-Position** and **Y-Position** coordinates directly.

You can also change the stamp position by dragging the stamp in the preview window.

Rotation

Specifies the angle of rotation for the stamp. The angle can be set by entering the number of degrees.

Negative values rotate the stamp clockwise.

Note

- **Rotation** is enabled only when **Text** or **Date/Time/User Name** is selected for **Stamp Type** on the **Stamp** tab.

Note

- Click **Defaults** to set the stamp position to **Center** and the rotation to "0."

Save settings Tab

The **Save settings** tab allows you to register a new stamp or delete an unnecessary stamp.

Title

Enter the title to save the stamp you created.

Up to 64 characters can be entered.

Note

- Spaces, tabs, and returns cannot be entered at the beginning or end of a title.

Stamps

Shows a list of saved stamp titles.

Specify a title to display the corresponding stamp in **Title**.

Save/Save overwrite

Saves the stamp.

Enter a title in **Title**, and then click this button.

Delete

Deletes an unnecessary stamp.

Specify the title of an unnecessary stamp from the **Stamps** list, and click this button.

Setting the Number of Copies and Printing Order

You can also set the number of copies on the **Basic Settings** tab.

1. Open the printer driver setup window

2. Specify the number of copies to be printed

   For **Copies** on the **Page Setup** tab, specify the number of copies to be printed.

3. Specify the print order

   Check the **Print from Last Page** check box when you want to print from the last page in order, and uncheck the check box when you want to print from the first page.
   Check the **Collate** check box when you are printing multiple copies of a document and want to print out all pages in each copy together. Uncheck this check box when you want to print all pages with the same page number together.

   - **Print from Last Page**: ☑ /**Collate**: ☑

     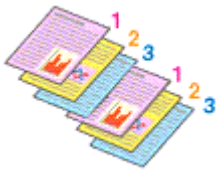

   - **Print from Last Page**: ☐ /**Collate**: ☑

     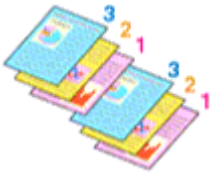

   - **Print from Last Page**: ☑ /**Collate**: ☐

     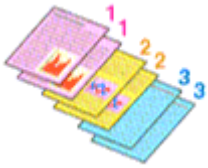

   - **Print from Last Page**: ☐ /**Collate**: ☐

     

4. Click **OK**

   When you perform print, the specified number of copies will be printed with the specified printing order.

Important

- When the application software that you used to create the document has the same function, specify the settings on the printer driver. However, if the print results are not acceptable, specify the function settings on the application software. When you specify the number of copies and the printing order with both the application software and this printer driver, the number of copies may be multiplied numbers of the two settings or the specified printing order may not be enabled.

Note

- By setting both **Print from Last Page** and **Collate**, you can perform printing so that papers are collated one by one starting from the last page.

Perform Borderless Printing

The borderless printing function allows you to print data without any margin by enlarging the data so that it extends slightly off the paper. In standard printing, margins are created around the document area. However, in borderless printing function, these margins are not created. When you want to print data such as a photo without providing any margin around it, set borderless printing.

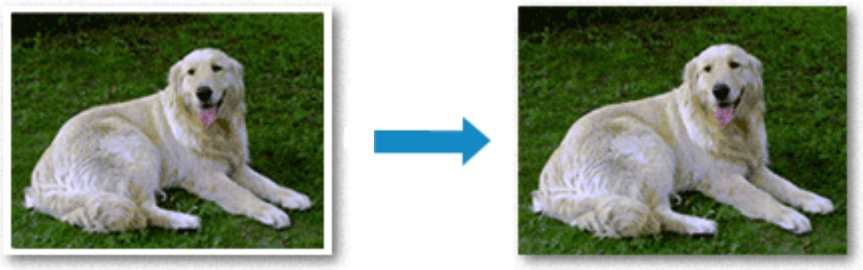

You can also set borderless printing on the **Basic Settings** Tab.

Note

- You can also set **Magnification level for borderless** on the operation panel of the printer, but the settings on the printer driver will be prioritized.

Setting Borderless Printing

1. Open the printer driver setup window

2. Set borderless printing

   Add a checkmark to **Borderless Printing** on the **Page Setup** tab.

   Click **OK** when the confirmation message appears.
   When a message prompting you to change the media type appears, select a media type from the list and click **OK**.

3. Check the paper size

   Check the **Page Size** list. When you want to change it, select another page size from the list. The list displays only sizes that can be used for borderless printing.

4. Adjust the amount of extension from the paper

   If necessary, adjust the amount of extension using the **Amount of Extension** slider.
   Moving the slider to the right increases the amount extending off the paper, and moving the slider to the left decreases the amount.
   It is recommended to set the slider at the second position from the right for most cases.



Important

- When the **Amount of Extension** slider is set to the rightmost position, the back side of the paper may become smudged.

5. Click **OK**

When you perform print, the data is printed without any margins on the paper.

Important

- When a page size that cannot be used for borderless printing is selected, the size is automatically changed to the valid page sizes for borderless printing.
- Depending on the type of the media used during borderless printing, the print quality may deteriorate at the top and bottom of the sheet or stains may form.
- When the ratio of the height to the width differs from the image data, a portion of the image may not be printed depending on the size of the media used.
  In this case, crop the image data with an application software according to the paper size.

Expanding the Range of the Document to Print

Setting a large amount of extension allows you to perform borderless printing with no problems. However, the portion of the document extending off the paper range will not be printed and for this reason, the subjects around the perimeter of a photo may not be printed.

When you are not satisfied with the result of borderless printing, reduce the amount of extension. The extension amount decreases as the **Amount of Extension** slider is moved to the left.

Important

- When the amount of extension is decreased, an unexpected margin may be produced on the print, depending on the size of the paper.

Note

- When the **Amount of Extension** slider is set to the leftmost position, image data will be printed in the full size. If you set this when printing the address side of a postcard, the postal code of the sender is printed in the correct position.
- When **Preview before printing** is checked on the **Media/Quality** tab, you can confirm whether there will be no margin before printing.
- To perform borderless full-page printing on **Matte Photo Paper**, **Premium Fine Art Smooth**, **Premium Fine Art Rough**, or **Photo Paper Pro Premium Matte A** go to the **Page Setup** tab, display the **Print Options** dialog box, and change the **Cancel the safety margin regulation for paper size** setting.

Page Layout Printing

The page layout printing function allows you to print more than one page image on a single sheet of paper.



1. Open the printer driver setup window

2. Set page layout printing

   Select a page layout number from **1 on 1** to **16 on 1** from the **Page Layout** list on the **Page Setup** tab.
   The current settings are displayed in the settings preview on the left side of the printer driver.

3. Select the print paper size

   Select the size of the paper loaded in the printer from the **Printer Paper Size** list.

4. Set the number of pages to be printed on one sheet and the page order

   If necessary, click **Preferences...**, specify the following settings in the **Page Layout Printing** dialog box, and click **OK**.

   Page Order
   To change the page arrangement order, select a placement method from the list.

   Page Border
   To print a page border around each document page, check this check box.

   Exclude single page documents from Page Layout Printing
   If you add a checkmark, single-page documents are printed on a single sheet without performing Page Layout Printing.

5. Complete the setup

   Click **OK** on the **Page Setup** tab.
   When you perform print, the specified number of pages will be arranged on each sheet of paper in the specified order.

Tiling/Poster Printing

The tiling/poster printing function allows you to enlarge image data, divide it into several pages, and print these pages on separate sheets of paper. You can also paste the pages together to create a large print like a poster.

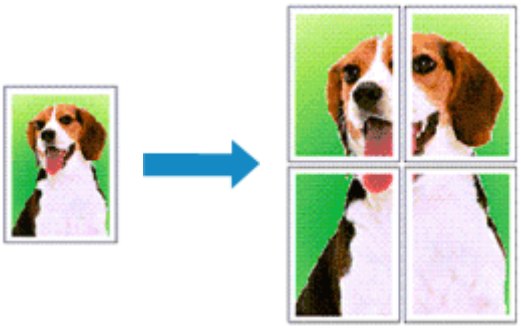

Setting Tiling/Poster Printing

1. Open the printer driver setup window

2. Set tiling/poster printing

   Select from **Poster (1 x 2)** to **Poster (4 x 4)** from the **Page Layout** list on the **Page Setup** tab.
   The current settings are displayed in the settings preview on the left side of the printer driver.

3. Select the print paper size

   Select the size of the paper loaded in the printer from the **Printer Paper Size** list.

4. Set the number of image divisions and the pages to be printed

   If necessary, click **Preferences...**, configure the required settings, and then click **OK**.

   Print "Cut/Paste" in margins

   To leave out words "Cut" and "Paste," uncheck this check box.

   Note

   - Depending on the environment of the printer driver you are using, this function may not be available.

   Print "Cut/Paste" lines in margins

   To leave out cut lines, uncheck this check box.

   Print page range

   Specifies the printing range. Select **All** under normal circumstances.
   To reprint only a specific page, select **Pages** and enter the page number you want to print. To specify multiple pages, enter the page numbers by separating them with commas or by entering a hyphen between the page numbers.

   Note

   - You can also specify the print range by clicking the pages in the settings preview.

5. Complete the setup

Click **OK** on the **Page Setup** tab.
When you perform print, the document will be divided into several pages during printing.

Printing Only Specific Pages

If ink becomes faint or runs out during printing, you can reprint only the specific pages by following the procedure below:

1. Set the print range

In the settings preview on the left of the **Page Setup** tab, click the pages that do not need to be printed.
The pages that were clicked are deleted, and only the pages to be printed are displayed.

Note

- Click the deleted pages to display them again.
- Right-click the settings preview to select **Print all pages** or **Delete all pages**.

2. Complete the setup

After completing the page selection, click **OK**.
When you perform print, only specified pages will be printed.

Important

- Since tiling/poster printing enlarges the document when printing it, the print results may become coarse.

Booklet Printing

The booklet printing function allows you to print data for a booklet. Data is printed on both sides of the paper. This type of printing ensures that pages can be collated properly, in page number order, when the printed sheets are folded and stapled at the center.

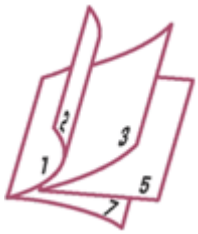

1. Open the printer driver setup window

2. Set booklet printing

   Select **Booklet Printing (Manual)** from **1-sided/2-sided/Booklet Printing** on the **Page Setup** tab.
   The current settings are displayed in the settings preview on the left side of the window.

3. Select the print paper size

   Select the size of the paper loaded in the printer from the **Printer Paper Size** list.

4. Set the margin for stapling and the margin width

   Click **Preferences...** and specify the binding method and margin for the finished booklet in the **Booklet Printing** dialog box, and then click **OK**.

5. Complete the setup

   Click **OK** on the **Page Setup** tab.
   When you print, the document will be printed on one side of a sheet of paper. When the printing of one side is complete, set the paper correctly by following the message, and then press **OK** button on the printer.
   When the printing of the other side is complete, fold the paper at the center of the margin and make a booklet.

Important

- If you want to select **Booklet Printing (Manual)**, select **Plain Paper** for **Media Type** on the **Media/ Quality** tab.

Note

- The stamp is not printed on the inserted blank sheets with the **Insert blank page** function of booklet printing.

Duplex Printing

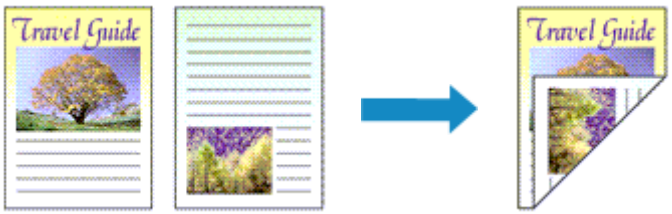

You can also set duplex printing in the **Basic Settings** tab.

1. Open the printer driver setup window

2. Set duplex printing

   Select **2-sided Printing (Manual)** from **1-sided/2-sided/Booklet Printing** on the **Page Setup** tab.

3. Select the layout

   Select the layout you want to use from the **Page Layout** list.

4. Specify the side to be stapled

   The best **Binding Location** is selected automatically from the **Orientation** and **Page Layout** settings.
   To change the setting, select another stapling side from the **Binding Location** list.

5. Set the margin width

   If necessary, click **Specify Margin...** and set the margin width, and then click **OK**.

6. Complete the setup

   Click **OK** on the **Page Setup** tab.
   When you perform print, the document is first printed on one side of a sheet of paper. After one side is printed, reload the paper correctly according to the message.
   Then tap **Start print** on the printer operation panel to print the opposite side.

Perform Long-form Printing

This section describes the procedure for printing on long sheets of paper that exceed 990.6 mm.

1. Open the printer driver setup window

2. Select the media type

   Select **Photo Paper (Long-form Printing)** or **Fine Art Paper (Long-form Print)** in **Media Type** in the **Basic Settings** tab.

3. Load long sheets of paper into the printer

   Note

   - When loading long sheets of paper, depending on the weight of the paper, the leading edge may lift up, causing printing to be misaligned. Hold the paper by hand by the part protruding from the tray to prevent the leading edge of the paper from lifting up.

4. Select the paper size

   Select **Custom...** for **Page Size** on the **Page Setup** tab.

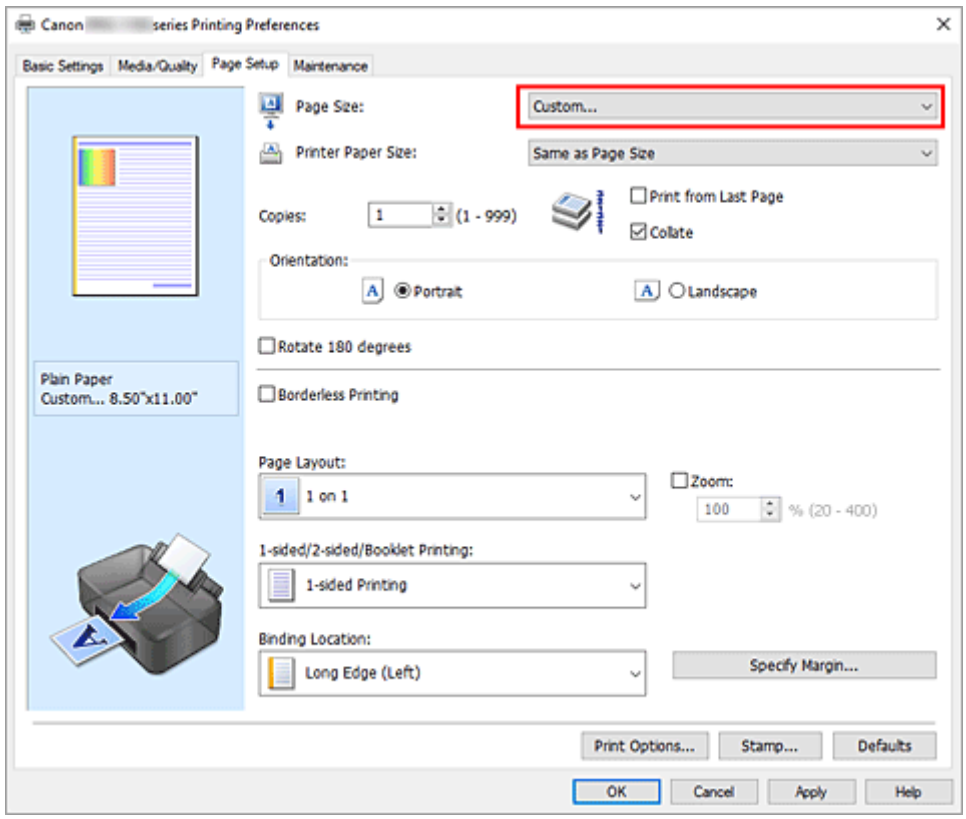

   The **Custom Paper Size** dialog box opens.

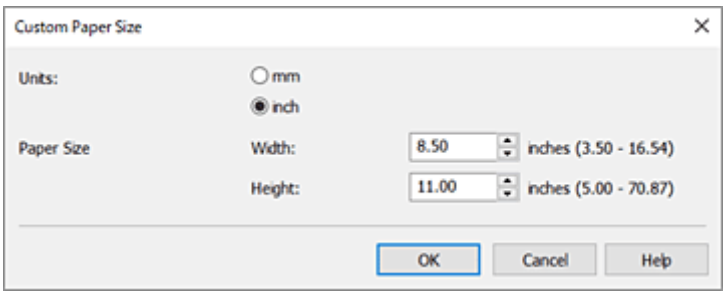

5. Set the custom paper size

Specify **Units**, and enter the **Width** and **Height** of the paper to be used. Then click **OK**.

6. Complete the setup

Click **OK**.
When you perform print, the data is printed with the specified paper size.

Note

- When printing on long sheets of paper, hold the ejected paper by hand or use it in a place where the paper will not fall. If the paper falls, it may cause the print surface to get dirty or damaged. When holding the paper by hand, do not pull the paper forcefully during printing.
- When printing on long sheets of paper, if ink runs out during printing, printing will be interrupted, and the paper will be ejected. Before starting printing, make sure that there is enough ink remaining.

Printing on Postcards

1. Load postcard on the printer
2. Open the printer driver setup window
3. Select commonly used settings

   Display the **Basic Settings** tab, and for **Profiles**, select **Standard**.
4. Select the paper size

   For **Printer Paper Size**, select **Hagaki 100x148mm** or **Hagaki 2 200x148mm**.

   Important

   - Return postcards can be used only when you print them from the computer.
   - When printing a return postcard, always set the paper size to **Hagaki 2 200x148mm** from your application software or the printer driver.
   - Do not fold the return postcard. If a crease is formed, the printer will not be able to feed the postcard properly, and this condition will cause line shifts or a paper jam.
   - With return postcards, borderless printing cannot be used.
5. Select the media type

   For **Media Type**, select **Hagaki A**, **Ink Jet Hagaki**, or **Hagaki**.

   Important

   - This printer cannot print on postcards that have photos or stickers attached.
   - You will get cleaner printing if you print the message side first and then print the address side.
   - The paper settings on the printer driver are different, depending on whether you are printing on the address side or the message side.
     For details about the paper information to be registered to the printer driver and on the printer, see the following:
     - Paper Settings on the Printer Driver and the Printer (Media Type)
     - Paper Settings on the Printer Driver and the Printer (Paper Size)
6. Set the print orientation

   To print the address horizontally, set **Orientation** to **Landscape**.
7. Select the print quality

   For **Quality**, select the quality according to your purpose.
8. Click **OK**

   When you perform printing, the data will be printed onto the postcard.

Print Using Washi

The soft and supple texture of Washi sets it apart from glossy paper and art paper.
If using the Washi of other brands listed below, set **Media Type** of the printer driver and the feed position as listed.

Category	Product Name	Media Type in the printer driver	Paper Source
Washi	Awagami Kozo Thin Natural	**Japanese Paper Washi**	Manual Feed (Feed one sheet at a time) Top Feed (Feed one sheet at a time)
	Awagami Kozo Thin White	**Japanese Paper Washi**	Manual Feed (Feed one sheet at a time) Top Feed (Feed one sheet at a time)
	Awagami Kozo Thick Natural	**Japanese Paper Washi**	Manual Feed (Feed one sheet at a time) Top Feed (Feed one sheet at a time)
	Awagami Kozo Thick White	**Japanese Paper Washi**	Manual Feed (Feed one sheet at a time) Top Feed (Feed one sheet at a time)
	Awagami Unryu Thin (Swirling Fibers)	**Japanese Paper Washi**	Manual Feed (Feed one sheet at a time) Top Feed (Feed one sheet at a time)

Setting Paper Dimensions (Custom Size)

You can specify the height and width of paper when its size cannot be selected from the **Page Size**. Such a paper size is called "custom size."

You can also set a custom size in **Printer Paper Size** on the **Basic Settings** tab.

1. Open the printer driver setup window

2. Select the paper size

   Select **Custom...** for **Page Size** on the **Page Setup** tab.

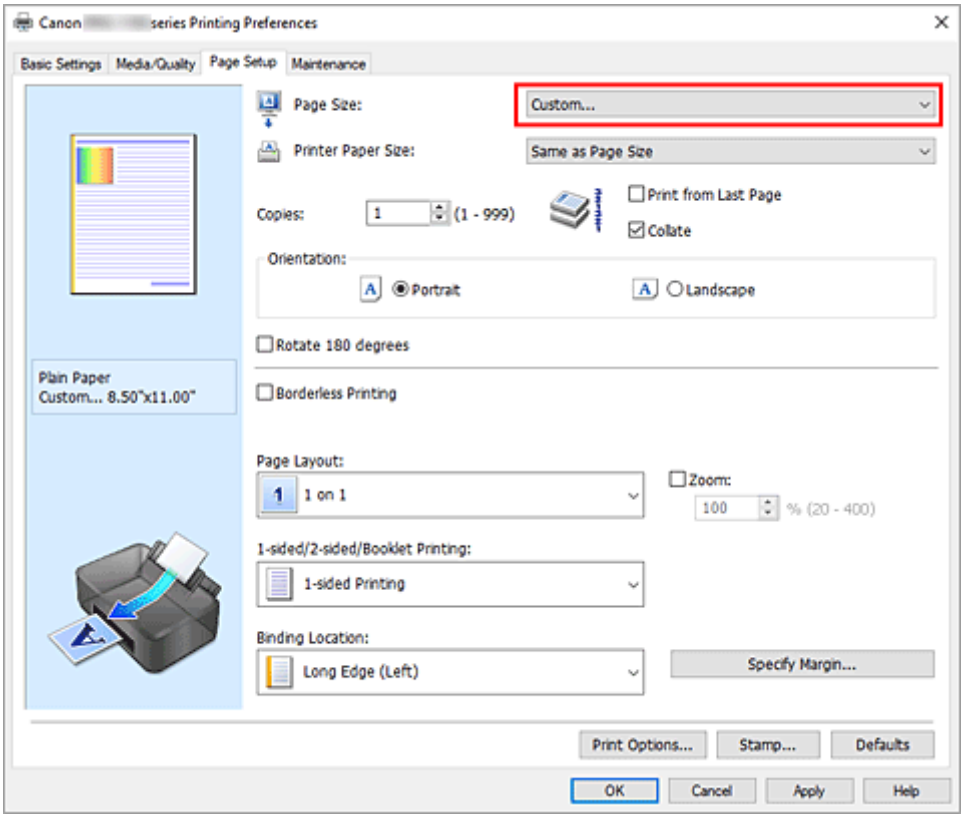

   The **Custom Paper Size** dialog box opens.

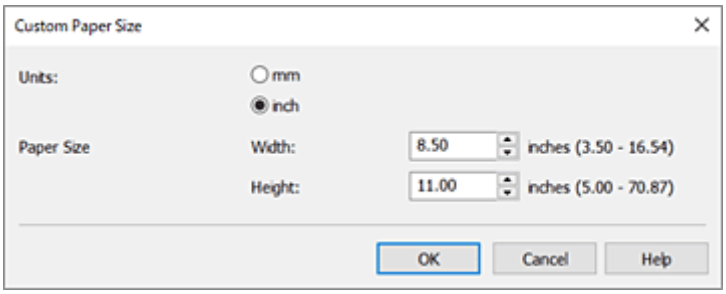

3. Set the custom paper size

   Specify **Units**, and enter the **Width** and **Height** of the paper to be used. Then click **OK**.

4. Complete the setup

Click **OK** on the **Page Setup** tab.
When you perform print, the data is printed with the specified paper size.

Note

- If the application software that created the document has a function for specifying height and width values, use the application software to set the values. If the application software does not have such a function or if the document does not print correctly, perform the above procedure from the printer driver to set the values.
- Printing may be disabled depending on the size of the specified user-defined media.
  For information about printable sizes for user-defined media, see "Media Types You Can Use."
- If the paper settings in the printer driver differ from the paper information registered on the printer, an error may occur. For instructions on what to do if an error occurs, see "Register Paper Information."
  For details about the paper information to be registered on the printer, see the following:
  - Paper Settings on the Printer Driver and the Printer (Media Type)
  - Paper Settings on the Printer Driver and the Printer (Paper Size)

Perform maintenance or settings (Maintenance tab)

- Maintenance Tab Description
- Cleaning the Print Heads
- Printing a Nozzle Check Pattern

Maintenance Tab Description

The **Maintenance** tab allows you to change the printer settings or check its status.

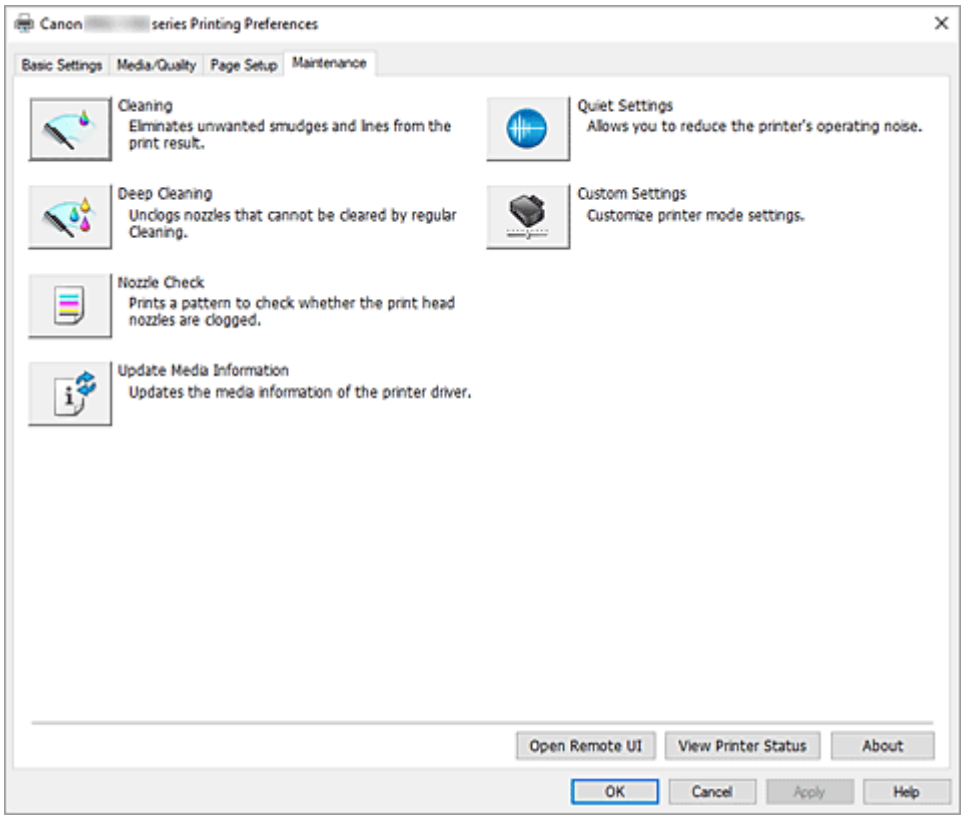

**Cleaning**

Performs print head Cleaning.

The print head Cleaning function allows you to clear up clogged print head nozzles.

Perform print head Cleaning if printing results are not satisfactory or if a specific color fails to print, even though there is enough ink.

**Deep Cleaning**

Performs Deep Cleaning.

Perform Deep Cleaning when two Cleaning attempts do not resolve the print head problem.

Note

- **Deep Cleaning** consumes a larger amount of ink than **Cleaning**.
  Cleaning the print heads frequently will rapidly deplete your printer's ink supply. Perform Cleaning only when necessary.

Ink Group

When you click **Cleaning** or **Deep Cleaning**, the **Ink Group** window is displayed.

Selects the ink group that you want to clean the print head for.

Click **Initial Check Items** to display the items that you need to check before you perform Cleaning or Deep Cleaning.

**Nozzle Check**

Prints a Nozzle Check pattern.

Perform this function if printing becomes faint or a specific color fails to print. Print a Nozzle Check pattern, and check whether the print head is working properly.

If the print result for a specific color is faint, or if there are any unprinted sections, click **Cleaning** to clean the print head.

To display a list of items that you should check before printing the Nozzle Check pattern, click **Initial Check Items**.

**Update Media Information**

Gets the latest media information from the printer and updates the media information in the printer driver.

When the media information is updated, the media displayed for **Media Type** on the **Media/Quality** tab is updated to the latest information.

When media information on the driver cannot be successfully updated, click **Initial Check Items** and check the content that is displayed.

**Quiet Settings**

Opens the **Quiet Settings** dialog box.

Quiet Settings dialog box allows you to specify a setting that reduces the operating noise of the printer. This mode comes in handy when the operating noise of the printer becomes a concern, such when printing at night. Perform this operation when you want to change the quiet mode setting.

Note

- If the printer is off or if communication between the printer and the computer is disabled, an error message may appear because the computer cannot collect the printer status.
  If this happens, click **OK** to display the most recent settings specified on your computer.

**Custom Settings**

Opens the **Custom Settings** dialog box.

Perform this function to change the settings of this printer.

Note

- If the printer is off or if communication between the printer and the computer is disabled, an error message may appear because the computer cannot collect the printer status.
  If this happens, click **OK** to display the most recent settings specified on your computer.

Open Remote UI

Menu for performing printer maintenance and changing settings.

View Printer Status

Starts the Canon IJ Status Monitor.

Perform this function when you want to check the printer status and how a print job is proceeding.

About

Opens the **About** dialog box.
The version of the printer driver, plus a copyright notice, can be checked.
In addition, the language to be used can be switched.

Initial Check Items (Cleaning / Deep Cleaning)

Before running **Cleaning** or **Deep Cleaning**, check that the printer power is on, and open the cover of the printer.
Check the following items for each ink.

- Check the amount of ink remaining in the tank.
- Check that you push in the ink tank completely until you hear a clicking sound.
- If an orange tape is adhered to the ink tank, peel it off completely.
  Any remaining tape will hinder ink output.
- Check that the ink tanks are installed in their correct positions.

Initial Check Items (Nozzle Check)

Before running **Nozzle Check**, check that the printer power is on, and open the cover of the printer.
Check the following items for each ink.

- Check the amount of ink remaining in the tank.
- Check that you push in the ink tank completely until you hear a clicking sound.
- If an orange tape is adhered to the ink tank, peel it off completely.
  Any remaining tape will hinder ink output.
- Check that the ink tanks are installed in their correct positions.

Initial Check Items (Update Media Information)

Check that the printer is connected to the computer and that printer is turned on.
If you are unable to update media information, check the following points.

- Ensure that a user set with administrator privileges carries out the media information update.
  Users other than administrators can check if a media information update is required, but cannot carry out the update itself.
- Before updating media information, ensure you have added, edited, or deleted media information on the printer using the Media Configuration Tool.

Important

- It may take some time to update media information.
- Do not change media information on the printer while you are updating media information on the printer driver.

Quiet Settings dialog box

When you click **Quiet Settings**, the **Quiet Settings** dialog box is displayed.
Quiet Settings dialog box allows you to specify a setting that reduces the operating noise of the printer.

Select when you wish to reduce the operating noise of the printer at night, etc.
Using this function may lower the print speed.

Do not use quiet mode

Select this option when you wish to use the printer with volume of normal operating noise.

Always use quiet mode

Select this option when you wish to reduce the operating noise of the printer.

Use quiet mode during specified hours

Select this option when you wish to reduce the operating noise of the printer during a specified period of time.

Set the **Start time** and the **End time** of the quiet mode you wish to be activated. If both are set to the same time, the quiet mode will not function.

Important

- You can set the quiet mode from the operation panel of the printer, or the **Maintenance** tab.
  No matter how you use to set the quiet mode, the mode is applied when you perform operations from the operation panel of the printer or printing from the computer.

Custom Settings dialog box

When you click **Custom Settings**, the **Custom Settings** dialog box is displayed.
If necessary, switch between various modes of printer operation.

Detects compatible media in the multi-purpose tray

Detects whether compatible media is loaded on the multi-purpose tray during printing using the multi-purpose tray, and displays a message if compatible media is not loaded.

Check this check box to detect whether compatible media is loaded when printing.

Uncheck this check box to print without detecting whether compatible media is loaded.

Important

- If you leave this check box unchecked, the printer may print to the multi-purpose tray even if compatible media is not loaded on the multi-purpose tray. Therefore, you should check this check box under normal circumstances.
- If you load compatible media that has already been printed onto the multi-purpose tray, the printer may detect that no compatible media is loaded on the multi-purpose tray. In this case, uncheck this check box.

Rotate 90 degrees left when orientation is [Landscape]

On the **Page Setup** tab, you can change the rotation direction of the **Landscape** in the **Orientation**.

To rotate the print data 90 degrees to the left during printing, check this check box.

Important

- Do not change this setting while the print job is displayed in the print wait list. Otherwise, characters may be omitted or the layout may become corrupt.

Do not detect mismatched paper settings when printing from a computer

When you print documents from your computer, the paper settings in the printer driver and the paper information registered on the printer do not match, this setting disables the message display and

allows you to continue printing.
To enable detection of paper setting mismatches, uncheck this check box.

Disables paper width detection when printing from computer

Even if the paper width identified by the printer during printing from the computer differs from the paper width that was set in **Paper Size** on the **Page Setup** tab, this function disables the message display and allows you to continue printing.
To disable detection of the paper width during printing, check this check box.

About dialog box

When you click **About**, the **About** dialog box is displayed.
This dialog box displays the version, copyright, and module list of the printer driver. You can select the language to be used and switch the language displayed in the setup window.

Modules

Lists the printer driver modules.

Language

Specifies the language you wish to use in the printer driver setup window.

Important

- If the font for displaying the language of your choice is not installed in your system, the characters will be garbled.

Settings for Data Sending

If you click **Settings for Data Sending**, the **Settings for Data Sending** dialog box will be displayed.
If it includes data you do not agree to sending, uncheck this check box.

Note

- Some printer functions can be set only from the **Maintenance** tab of **Printer properties**.

Related Topics

- Cleaning the Print Heads
- Printing a Nozzle Check Pattern
- Reducing the Printer Noise
- Changing the Printer Operation Mode

Cleaning the Print Heads

The print head Cleaning and Deep Cleaning functions allow you to clear up clogged print head nozzles. Perform print head Cleaning if printing results are not satisfactory or if a specific color fails to print, even though there is enough ink.



Cleaning

1. Open the **Maintenance** Tab

2. Click **Cleaning**

   When the **Print Head Cleaning** dialog box opens, select the ink group for which Cleaning is to be performed.

   Click **Initial Check Items** to display the items you need to check before performing Cleaning.

3. Perform Cleaning

   Check that the printer is on and then click **Start**.

   Print Head Cleaning starts.

4. Complete Cleaning

   Click **OK** when the confirmation message is displayed.
   The **Nozzle Check** dialog box will open.

5. Check the results

   To check whether the print quality has improved, click **Print Check Pattern**. To cancel the check process, click **Cancel**.

   If cleaning the head once does not resolve the print head problem, clean it once more.

Important

- **Cleaning** consumes a small amount of ink.
  Cleaning the print head frequently will rapidly deplete your printer's ink supply. Perform Cleaning only when necessary.



Deep Cleaning

Deep Cleaning is more thorough than Cleaning. Perform Deep Cleaning when two **Cleaning** attempts do not resolve the print head problem.

1. Open the **Maintenance** Tab

2. Click **Deep Cleaning**

When the **Deep Cleaning** dialog box opens, select the ink group for which Deep Cleaning is to be performed.

Click **Initial Check Items** to display the items you need to check before performing Deep Cleaning.

3. Perform Deep Cleaning

Check that the printer is on and then click **Start**.
Click **OK** when the confirmation message appears.

Print head Deep Cleaning starts.

4. Complete Deep Cleaning

Click **OK** when the confirmation message is displayed.
The **Nozzle Check** dialog box will open.

5. Check the results

To check whether the print quality has improved, click **Print Check Pattern**. To cancel the check process, click **Cancel**.

Important

- **Deep Cleaning** consumes a larger amount of ink than **Cleaning**.
  Cleaning the print head frequently will rapidly deplete your printer's ink supply. Perform Deep Cleaning only when necessary.

Related Topic

Printing a Nozzle Check Pattern

Printing a Nozzle Check Pattern

The Nozzle Check function allows you to check whether the print head is working properly by printing a Nozzle Check pattern. Print the pattern if printing results are not satisfactory, or if a specific color fails to print.



Nozzle Check

1. Open the **Maintenance** Tab

2. Click **Nozzle Check**

   The **Nozzle Check** dialog box opens.
   Click **Initial Check Items** to display the items that you need to check before printing the Nozzle Check pattern.

3. Load paper in the printer

   Load one sheet of A4 size or Letter size plain paper into the top feed.

4. Print a Nozzle Check pattern

   Check that the printer is on and then click **Print Check Pattern**.
   The Nozzle Check pattern will be printed.

   Click **OK** when the confirmation message appears.
   The **Pattern Check** dialog box opens.

5. Check the print result

   Check the print result. If the print result is normal, click **Exit**.

   If the print result is smudged or if there are any unprinted sections, click **Cleaning** to clean the print head.

Related Topic

➡ Cleaning the Print Heads

Overview of the Printer Driver

- **Canon IJ Printer Driver**
  - Opening Printer Driver's Setup Screen
- **Canon IJ Status Monitor**
  - Checking Ink Status from Your Computer
- **Instructions for Use (Printer Driver)**
- **Canon IJ Preview**
- **Updating Media Information in Printer Driver**
- **Deleting the Undesired Print Job**
- **Canon IJ Status Monitor Description**
- **Canon IJ Preview Description**

Canon IJ Printer Driver

The Canon IJ printer driver (simply called printer driver below) is software that you install onto your computer so that it can communicate with the printer.

The printer driver converts the print data created by your application software into data that your printer can understand, and sends the converted data to the printer.

Because different models support different print data formats, you need a printer driver for the specific model you are using.

Installing the Printer Driver

To install the printer driver, install the driver from the Setup CD-ROM or our website.

Specifying the Printer Driver

To specify the printer driver, open the **Print** dialog box of the application software you are using, and select "Canon XXX" (where "XXX" is your model name).

Displaying the Manual from the Printer Driver

To display the description of a setup tab from the printer driver's setup screen, click **Help** on that tab.

Related Topic

➡ Opening Printer Driver's Setup Screen

Opening Printer Driver's Setup Screen

You can display the printer driver's setup screen from your application software or by clicking the printer icon.

Displaying the Printer Driver's Setup Screen from Your Application Software

Perform this procedure to set up the print settings during printing.

1. Select print command from application software

   In general, select **Print** on the **File** menu to open the **Print** dialog box.

2. Select your printer model, and click **Preferences** (or **Properties**)

   The printer driver's setup screen appears.

Note

- Depending on the application software you are using, the command and menu names, and the number of steps may vary. For details, refer to the operating instructions of your application software.

Displaying the Printer Driver's Setup Screen by Clicking the Printer Icon

From the setup screen you can perform printer maintenance operations such as print head cleaning, or set print settings to be shared by all application software.

The following instructions are shown using screens displayed in Windows 11 as an example.

1. Select the **Settings** -> **Bluetooth & devices** -> **Printers & scanners**

2. Click your model name icon, and then select **Printing preferences** from the displayed menu

   The printer driver setup window appears.

   Note

   - If you're using Windows 10 or earlier, follow the steps below to display the printer driver settings screen.
     1. Select the **Control Panel** -> **Hardware and Sound** -> **Devices and Printers**
     2. Right-click your model name icon, and then select **Printing preferences** from the displayed menu

     Opening the printer driver setup window through **Printer properties** displays such tabs regarding the Windows functions as the **Ports** (or **Advanced**) tab. Those tabs do not appear when opening through **Printing preferences** or application software. For tabs regarding Windows functions, refer to the user's manual for the Windows.

Canon IJ Status Monitor

The Canon IJ Status Monitor displays the printer status and the printing progress. The printer status is shown by the images, icons, and messages in the status monitor.

Launching the Canon IJ Status Monitor

The Canon IJ Status Monitor launches automatically when print data is sent to the printer. When launched, the Canon IJ Status Monitor appears as a button on the task bar.

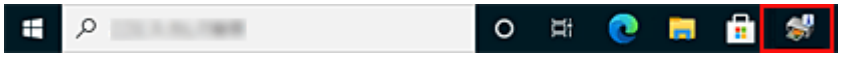

Click the button of the status monitor displayed on the task bar. The Canon IJ Status Monitor appears.

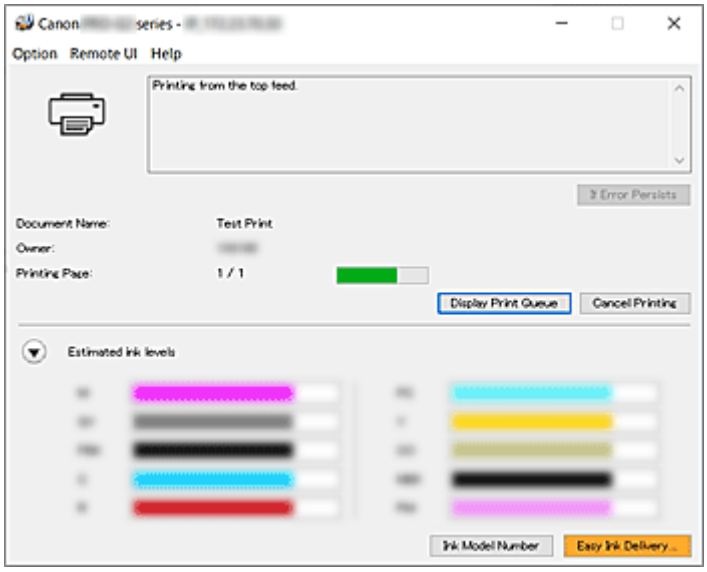

Note

- To open the Canon IJ Status Monitor when the printer is not printing, open the printer driver setup window and click **View Printer Status** on the **Maintenance** tab.
- The information displayed on the Canon IJ Status Monitor may differ depending on the country or region where you are using your printer.

When Errors Occur

The Canon IJ Status Monitor is automatically displayed if an error occurs (e.g., if the printer runs out of paper or if the ink is low).

In such cases, take the appropriate action as described.

Related Topic

➡ Canon IJ Status Monitor Description

Checking Ink Status from Your Computer

You can check the remaining ink level and the ink tank types for your model.

1. Open the printer driver setup window

2. Launching the Canon IJ Status Monitor

   On the **Maintenance** tab, click **View Printer Status**.

3. Display **Estimated ink levels**

   Ink status is displayed as an illustration.

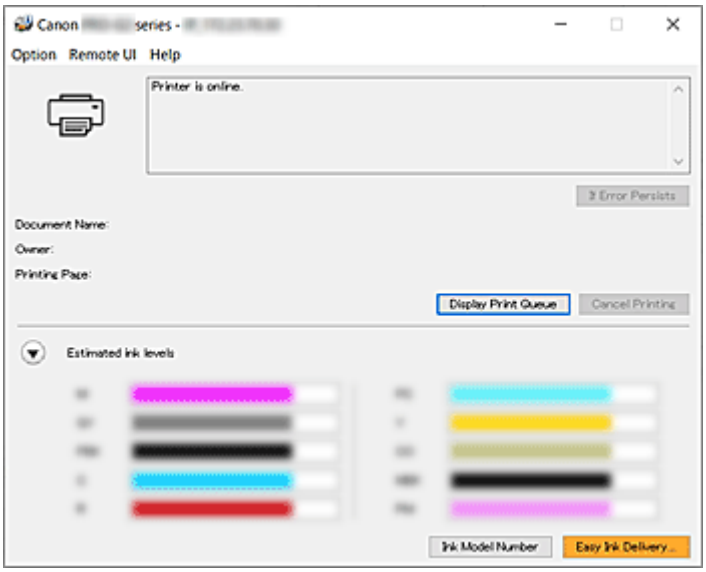

Note

- When you print on A3 paper or larger paper sizes, the ink may run out before printing is finished or the printing may become faint or streaky (with white lines).

Instructions for Use (Printer Driver)

This printer driver is subject to the following restrictions. Keep the following points in mind when using the printer driver.

Restrictions on the Printer Driver

- Depending on the document type to be printed, the paper feed method specified in the printer driver may not operate correctly.
  If this happens, open the printer driver setup window from the **Print** dialog box of the application software, and check the setting in the **Paper Source** field on the **Media/Quality** tab.
- With some applications, the **Copies** setting in the **Page Setup** tab of the printer driver may not be enabled.
  In this case, use the copies setting in the **Print** dialog box of the application software.
- If the selected **Language** in the **About** dialog box of the **Maintenance** tab does not match the operating system interface language, the printer driver setup window may not be displayed properly.
- Do not change the **Advanced** tab items of the printer properties. If you change any of the items, you will not be able to use the following functions correctly.
  Also, if **Print to file** is selected in the **Print** dialog box of the application software and with applications that prohibit EMF spooling, the following functions will not operate.
  - **Preview before printing** on the **Media/Quality** tab
  - **Prevention of Print Data Loss** in the **Print Options** dialog box on the **Page Setup** tab
  - **Booklet Printing (Manual)** in **1-sided/2-sided/Booklet Printing** on the **Page Setup** tab
  - **Print from Last Page**, **Collate**, **Specify Margin...**, and **Stamp...** on the **Page Setup** tab
- Since the resolution in the preview display differs from the printing resolution, text and lines in the preview display may appear different from the actual print result.
- With some applications, the printing is divided into multiple print jobs.
  To cancel printing, delete all divided print jobs.
- If image data is not printed correctly, display the **Print Options** dialog box from the **Page Setup** tab and change the setting of **Disable ICM required from the application software**. This may solve the problem.
- If you are using a model that has a card slot, the card slot of the printer may become inaccessible. In such cases, restart the printer or turn it off and reconnect the USB cable.

Points to Note About Applications with Restrictions

- There are following restrictions in Microsoft Word (Microsoft Corporation).
  - When Microsoft Word has the same printing functions as the printer driver, use Word to specify them.
  - When a setting from **2 on 1** to **16 on 1** or **Zoom** is used for **Page Layout** on the **Page Setup** tab of the printer driver, the document may not print normally in certain versions of Word.
  - When **Page Size** in Word is set to "XXX Enlarge/Reduce," the document may not print normally in certain versions of Word.
    If this happens, follow the procedure below.
    1. Open Word's **Print** dialog box.

2. Open the printer driver setup window, and on the **Page Setup** tab, set **Page Size** to the same paper size that you specified in Word.
3. Set **Booklet Printing (Manual)** in **Page Layout** or **1-sided/2-sided/Booklet Printing** according to your requirements.
4. Click **OK** to close the window.
5. Without starting printing, close the **Print** dialog box.
6. Open Word's **Print** dialog box again.
7. Open the printer driver setup window and click **OK**.
8. Start printing.

- If bitmap printing is enabled in Adobe Illustrator (Adobe Incorporated), printing may take time or some data may not be printed. Print after unchecking the **Bitmap Printing** check box in the **Print** dialog box.

Canon IJ Preview

The Canon IJ Preview is an application software that displays what the print result will look like before a document is actually printed.

The preview reflects the information that is set within the printer driver and allows you to check the document layout, print order, and number of pages. You can also change the media type and paper source settings.

When you want to display a preview before printing, open the printer driver setup window, click the **Media/ Quality** tab, and check the **Preview before printing** check box.

When you do not want to display a preview before printing, uncheck the check box.

Related Topic

- Preventing Printing Errors

Updating Media Information in Printer Driver

This function gets the latest media information from the printer and updates the media information in the printer driver.
When the media information is updated, the media displayed for **Media Type** on the **Media/Quality** tab is updated to the latest information.

The procedure for updating media information is described below.

 Update Media Information

1. Open printer driver setup screen

2. On **Maintenance** tab, click **Update Media Information**

   The **Update Media Information** dialog box appears.
   When media information on the driver cannot be successfully updated, click **Initial Check Items** and check the content that is displayed.

3. Update media information

   By following the dialog instructions, check that the printer is on, and then click **Start**.
   After checking whether or not the printer media information needs to be updated, a message will be displayed.
   If the printer media information is up to date, click **OK** and finish updating media information.
   If the information needs to be updated, follow the below steps to do so:

4. Update media information

   When a confirmation message appears, click **OK**.
   The printer driver media information will update.

   Important

   - It may take some time to update the media information.

5. Finish updating media information

   When a confirmation message appears, click **OK**.
   The media information will be updated.

   Important

   - Restart the printer driver after updating media information.

Important

- Ensure that a user with administrative privileges carries out the media information update.
  Users other than administrators can check if a media information update is required, but cannot carry out the update itself.

- Do not change media information on the printer while you are updating media information on the driver.
- When you have added, deleted, or edited media using administrative tools (the Media Configuration Tool) but have not updated the media information, issues may arise such as the inability to print.

Deleting the Undesired Print Job

If the printer does not start printing, canceled or failed print job data may be remaining.
Delete the undesired print job by using the Canon IJ Status Monitor.

1. Display the Canon IJ Status Monitor

   Click the icon of the Canon IJ Status Monitor displayed on the task bar.
   The Canon IJ Status Monitor appears.

2. Display the print jobs

   Click **Display Print Queue**.
   The print queue window opens.

3. Delete the print jobs

   Select the print jobs you want to delete, and select **Cancel** from the **Document** menu.
   When the confirmation message appears, click **Yes**.

   The deletion of the print job is complete.

Important

- Users who have not been granted access permission for printer management cannot delete the print job of another user.

Canon IJ Status Monitor Description

The Canon IJ Status Monitor displays the printer status and the printing progress. The printer status is shown by the images, icons, and messages in the status monitor.

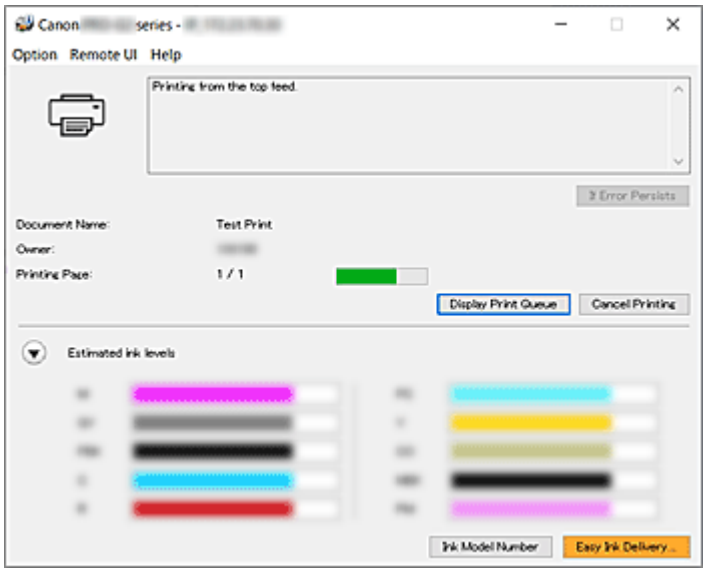

Features of the Canon IJ Status Monitor

The Canon IJ Status Monitor has the following functions:

Onscreen display of printer status

The status monitor displays the printer status in real-time.
You can check the progress of each document to be printed (print job).

Display of error content and correction procedure

The status monitor displays information on any errors that occur on the printer.
You can then immediately check what sort of action to perform.

Ink status display

Displays the ink status.
Ink tank types and ink levels can be confirmed.

Overview of the Canon IJ Status Monitor

The Canon IJ Status Monitor uses images, icons, and messages to display the printer status and the ink status.
During printing, you can check information about the document being printed and the print progress.
If an error occurs, the status monitor displays the error content and instructions on how to correct the error. Follow the message instructions.

Printer

Canon IJ Status Monitor shows an icon when a warning or error occurs to the printer.

: There is a warning.

: There has been an operator error.

 : There is a notice about something other than a warning or an error.

 : There has been an error which requires a service.

If Error Persists

If a warning or an error occurs, you can click the button.

A description of the warning or error will be displayed.

Document Name

Name of the document being printed.

Owner

Owner's name of the document being printed.

Printing Page

Page number of current page and the total page count.

Display Print Queue

The print queue, which controls the current document and documents waiting to be printed.

Cancel Printing

Cancels printing.

Estimated ink levels

Click (the disclosure triangle) to display a pictorial representation of the estimated ink level in the ink tank.

Also, if the remaining ink is low or empty, an icon or a message will appear (Ink level warning / Ink empty error).

Move the cursor onto the image to check detailed information such as the remaining ink levels and the names of ink tanks that the printer can use.

Ink Model Number

You can look up the correct ink tank for your printer.

Estimated Maintenance Cartridge Usage

Displays icons to report that the available space in the maintenance cartridge is low or the cartridge is full.

Click  (the disclosure triangle) to display a pictorial representation of the estimated usage amount in the maintenance cartridge.

Option Menu

If a printer message appears, select **Enable Status Monitor** to start the Canon IJ Status Monitor.

Select **Enable Status Monitor** to use the following commands:

Always Display Current Job

Displays the Canon IJ Status Monitor whenever a document is being printed.

Always Display on Top

Displays the Canon IJ Status Monitor in front of other windows.

Display Firmware Update Notifications

Displays firmware update notifications.

If there's a firmware update available, a dialog box is displayed when you start printing.

If you add a check mark to **Do not show this message again** in this dialog box, you can prevent it from displaying again.

Start when Windows is Started

Automatically starts the Canon IJ Status Monitor when Windows is started.

Remote UI menu

You are able to open the printer's Remote User Interface.

You are able to check the printer status and run maintenance functions on the printer when connected to and using it through a network.

Note

- When the printer is being used via USB connection **Remote UI** will not display.

Printer Information

Allows you to check detailed information, such as the printer status, the print progress, and remaining ink levels.

Maintenance

Allows you to run printer maintenance and change printer settings.

Download Security Certificate

Displays the **For secure communication** window.

This window allows you to download the route certificate, register it to the browser, and disable warning displays.

Help Menu

Select this menu to display Help information for the Canon IJ Status Monitor including version and copyright information.

Related Topic

Canon IJ Status Monitor

Canon IJ Preview Description

Canon IJ Preview is an application software that displays what the print result will look like before a document is actually printed.
The preview reflects the information that is set within the printer driver and allows you to check the document layout, print order, and number of pages. You can also change the media type and paper source settings.
When you want to display a preview before printing, open the printer driver setup window, and check the **Preview before printing** check box on the **Media/Quality** tab.

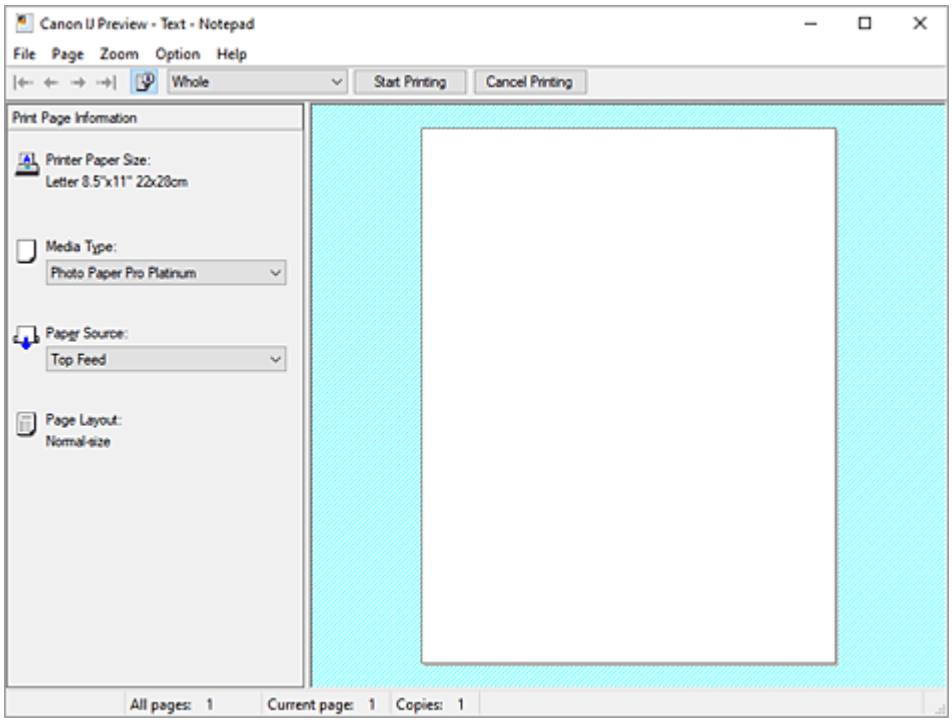

File Menu

Selects the print operation.

Start Printing

Ends the Canon IJ Preview and then starts printing the document that is displayed on the preview screen.

This command has the same function as the **Start Printing** on the toolbar.

Cancel Printing

Ends the Canon IJ Preview and cancels the printing of the document that is displayed on the preview screen.

This command has the same function as the **Cancel Printing** on the toolbar.

Exit

Ends the Canon IJ Preview.

Page Menu

This menu includes the following commands to select page to be displayed.

All of these commands except **Page Selection...** can also be selected from the toolbar.

Note

- If the pages are being spooled, the last spooled page becomes the last page.

- When the following functions are selected, the number of pages is the number of sheets to be used for printing, and not the number of pages in the original document created with the application software.
  - **2 on 1** to **Poster (4 x 4)** in **Page Layout** on the **Page Setup** tab
  - **2-sided Printing (Manual)** and **Booklet Printing (Manual)** in **1-sided/2-sided/Booklet Printing** on the **Page Setup** tab
- If duplex printing manually has been set, the front pages which will be printed first are all displayed together, and then the back pages are displayed.

First Page

Displays the first page of the document.

Previous Page

Displays the page located before the currently displayed page.

Next Page

Displays the page located after the currently displayed page.

Last Page

Displays the last page of the document.

Page Selection...

Displays the **Page Selection** dialog box.
This command allows you to specify the page number of the page to be displayed.

Zoom Menu

Selects the ratio of the actual size printed on the paper to the preview display size.
You can also select the ratio from the drop-down list box located on the toolbar.

Whole

Displays the entire page of data as one page.

50%

Reduces the displayed data to 50% of the actual size to be printed.

100%

Displays the data at the actual size to be printed.

200%

Enlarges the displayed data to 200% of the actual size to be printed.

400%

Enlarges the displayed data to 400% of the actual size to be printed.

Option Menu

This menu includes the following command:

Displays Print Page Information

Displays print setup information (including printer paper size, media type, and page layout) for each page at the left side of the preview screen.
This screen also allows you to change the media type and paper source settings.

Help Menu

When you select this menu item, the Help window for Canon IJ Preview is displayed, and you can check the version and copyright information.

Start Printing button

Prints the documents selected in the document list.

The printed documents are deleted from the list, and when all documents are printed, the Canon IJ Preview closes.

Cancel Printing button

Ends the Canon IJ Preview, and cancels the printing of the document that is displayed on the preview screen.

You can click this button while spooling.

Print Page Information Screen

Displays print setup information for each page at the left side of the preview screen.

This screen also allows you to change the media type and paper source settings.

Important

- If the media type and paper source are set from the application software, those settings have priority and the changed settings may become ineffective.

Printer Paper Size

Displays the paper size of the document to be printed.

Media Type

You can select the media type of the document to be printed.

Paper Source

You can select the paper source of the document to be printed.

Page Layout

Displays the page layout of the document to be printed.

Updating the Driver

Drivers include a printer driver and MP Drivers. The MP Drivers include a printer driver, ScanGear (scanner driver), and fax driver.
By updating the Driver to the latest version of the Driver, unresolved problems may be solved.

Important

- Check the following if you want to install or delete drivers.
  - Log on as a user who has the administrator account.
  - Terminate all running applications.

- Installing the Driver
- Deleting the Unnecessary Driver

Installing the Driver

1. Turn on the printer

2. Start the installer

   Double-click the icon of the downloaded file.
   The installation program starts.

3. Install the driver

   Take the appropriate action as described on the screen.

4. Complete the installation

   Click **Exit**.

   Depending on the environment you are using, a message prompting you to restart the computer may be displayed. To complete the installation properly, restart the computer.

Important

- You can download the driver for free, but any Internet access charges incurred are your responsibility.

Deleting the Unnecessary Driver

The printer driver which you no longer use can be deleted.

1. Start the uninstaller

   Select **Control Panel** -> **Programs** -> **Programs and Features**.
   From the program list, select "Canon XXX Printer Driver/MP Drivers" (where "XXX" is your model name) and then click **Uninstall**.

   The confirmation window for uninstalling the model appears.

2. Perform the uninstaller

Click **Start**. When the confirmation message appears, click **Yes**.
When all the files have been deleted, click **Complete**.

The deletion of the Driver is complete.

Printing from Printer

- Printing Templates Such as Lined or Graph Paper

Printing Templates Such as Lined or Graph Paper

This section describes how to print a standard form.

- Printable Template Form
- Printing Templates

Printable Template Form

You can print a standard form such as pattern paper that can be used for an album mount or place mat, graph paper, staff paper, a checklist, or a schedule form.

Printing Templates

Print template form following the procedure below.

1. Select  **Template print** on the HOME screen, then press the **OK** button.
2. Use the ▲▼ buttons to select template you want to print and press the **OK** button.

   When a message appears, check it and press the **OK**.
3. Use the ◄ ► buttons to select the form you want to print and press the **OK** button.
4. If necessary, change the settings using the ▲▼ buttons and press the **OK** button.

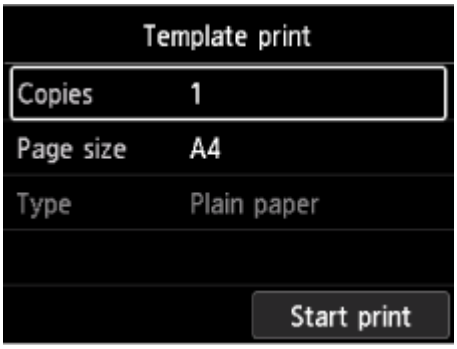

- **Copies**

  Use the ▲▼ buttons to specify the number of copies and press the **OK** button.
- **Page size**

  Use the ▲▼ buttons to select the page size and press the **OK** button.

Note

- Depending on the form, some setting of page size cannot be specified. If it is selected,  and **Error details** are displayed on the printer's LCD. In this case, select  on the upper left on the printer's LCD to check the message and change the setting.

- **Type**

  Use the ▲▼ buttons to select the media type and press the **OK** button.

  Note

  - The paper type is set to **Plain paper**, except pattern paper.

5. Load paper.

   Loading Paper in the Top Feed

6. Select **Start print**.

   The printer starts printing.

Printing from Smartphone/Tablet

For more on printing from a device, refer to the device's or application's instruction manual.

- **Print Easily from a Smartphone or Tablet with Canon PRINT**
- **Printing from iOS Device (AirPrint)**
- **About Mopria®**
- **Printing with Canon Print Service**

Handling Paper

- **Loading Paper**
  - Paper Sources to Load Paper
  - Loading Paper in the Top Feed
  - Loading Paper in the Manual Feed Tray
  - Register Paper Information
- **Information about Paper**
  - Media Types You Can Use
  - Paper Load Limit
  - Handling Paper
  - Before Printing on Art Paper
  - Managing Paper Information on Printer Using Media Configuration Tool

Loading Paper

- Paper Sources to Load Paper
- Loading Paper in the Top Feed
- Loading Paper in the Manual Feed Tray
- Register Paper Information

Paper Sources to Load Paper

The printer has two paper sources for feeding paper, the top feed (A) and manual feed tray (B).

Important

- The paper source used depends on the page size and media type.
  - Media Types You Can Use
  - Paper Load Limit
- When printing, select the correct page size, media type, and paper source. If you select the wrong page size or media type, the printer may not print with the proper print quality.

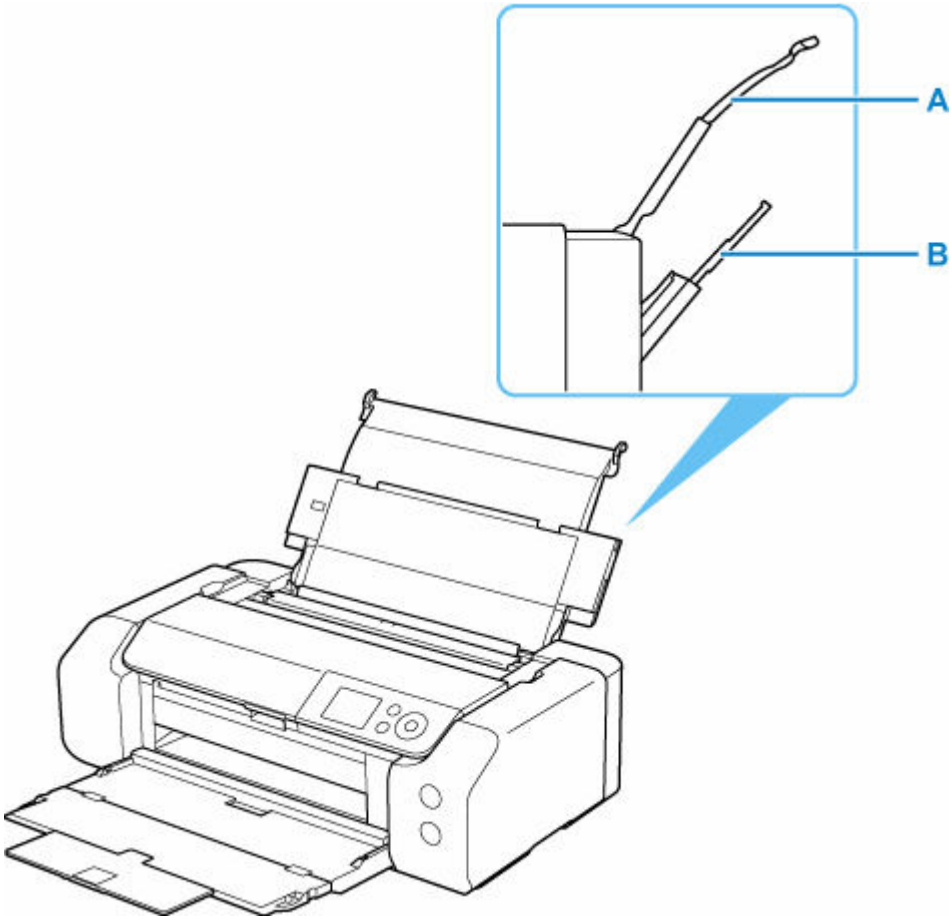

Top Feed

Load paper from 4" x 6" (10 x 15 cm) size to A3+ size.

Two or more sheets of the same size and type of paper can be loaded at the same time, and fed automatically one sheet at a time.

Load plain paper or postcard in the top feed.

- Loading Paper in the Top Feed

Manual Feed Tray

Load paper from 8" x 10" (20 x 25 cm) size to A3+ size.

Load a sheet of paper at a time.

Load thick paper such as art paper in the manual feed tray.

➡ Loading Paper in the Manual Feed Tray

Loading Paper in the Top Feed

You can load multiple sheets of paper of the same type and size in the top feed.

When printing on postcards, check the contents of "Precautions when printing on postcards" before loading postcards.

Important

- For the paper types (Canon genuine paper), size, and weight/thickness that can be used with the printer, see Media Types You Can Use.
- If you cut plain paper to a size of 5" x 7" (13 x 18 cm) or smaller to perform trial print, it can cause paper jams.

Note

- We recommend Canon genuine photo paper for printing photos.
- You can use general copy paper or **Canon Red Label Superior** WOP111 / **Canon Océ Office Colour Paper** SAT213.
- Print in an environment (temperature and humidity) suitable to the paper in use. For the temperature and humidity conditions of Canon genuine papers, refer to the paper's packaging or the supplied instructions.

How to Load Paper

1. Prepare paper.

   Align the edges of paper. If paper is curled, flatten it.

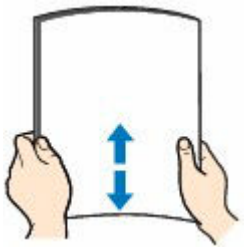

Note

- Align the edges of paper neatly before loading. Loading paper without aligning the edges may cause paper jams.
- If paper is curled, hold the curled corners and gently bend them in the opposite direction until the paper becomes completely flat.

  For details on how to flatten curled paper, see "Correct curl before loading paper." in Paper Is Smudged/Printed Surface Is Scratched/Ink Blots/Paper Curl.
- When using **Photo Paper Plus Semi-gloss** SG-201, even if the sheet is curled, load one sheet at a time as it is. If you roll up this paper to flatten, this may cause cracks on the surface of the paper and reduce the print quality.

2. Open the paper support (A) of the top feed.

3. Open the paper output tray (B) gently.

Important

- If the multi-purpose tray guide (C) is open, be sure to close it.

4. Open the output tray extension (D), then pull out the paper output support (E).

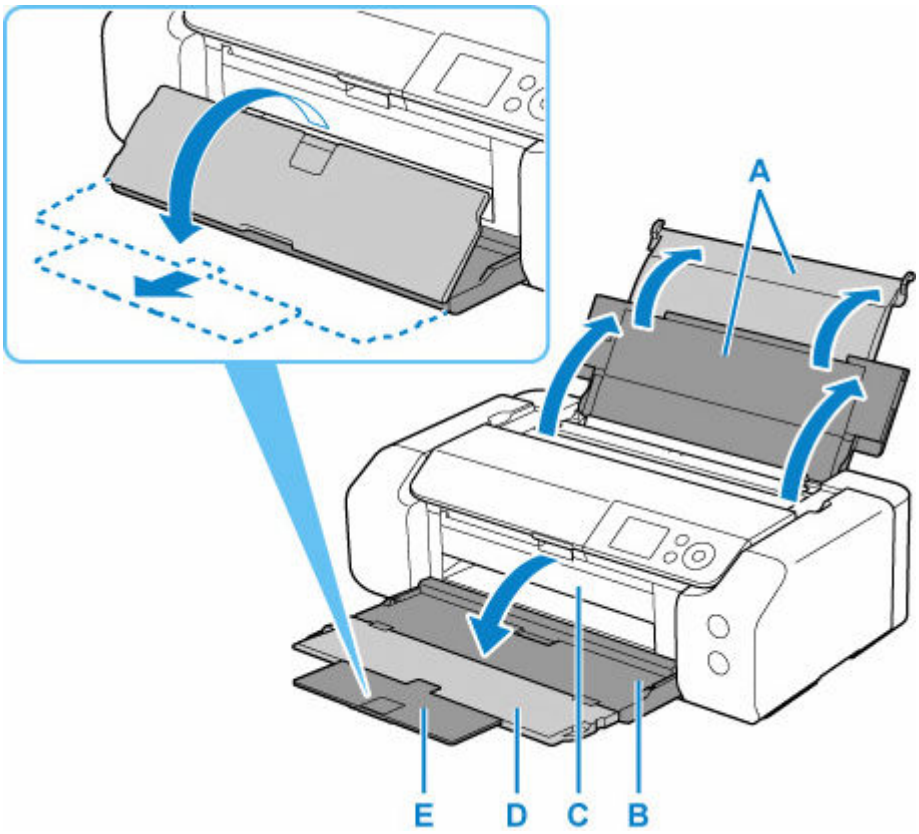

5. Open the feed slot cover (F).

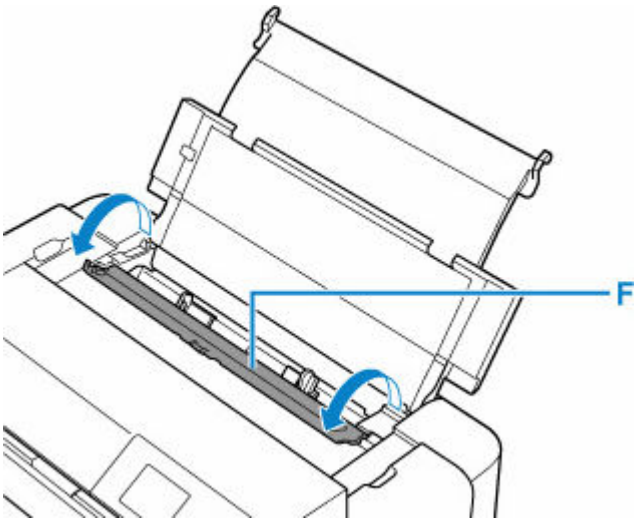

6. Slide the paper guides (G) to open them, and load the paper in the center of the top feed WITH THE PRINT SIDE FACING YOU.

7. Slide the paper guides (G) to align them with both sides of the paper stack.

   Do not slide the paper guides too hard against the paper. The paper may not be fed properly.

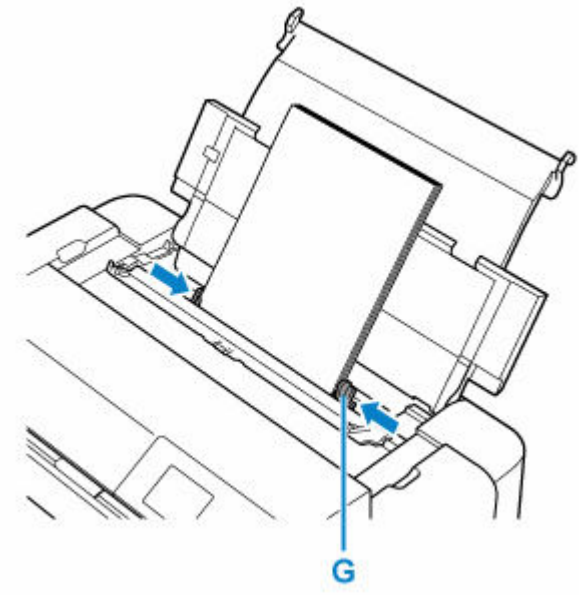

Important

- Always load paper (except return postcard) in the portrait orientation (H). Loading paper in the landscape orientation (I) can cause paper jams.

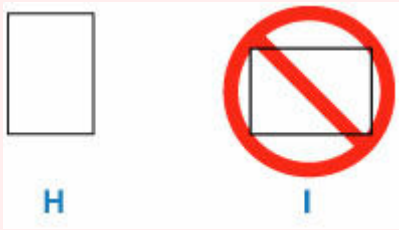

Note

- Do not load sheets of paper higher than the load limit mark (J).

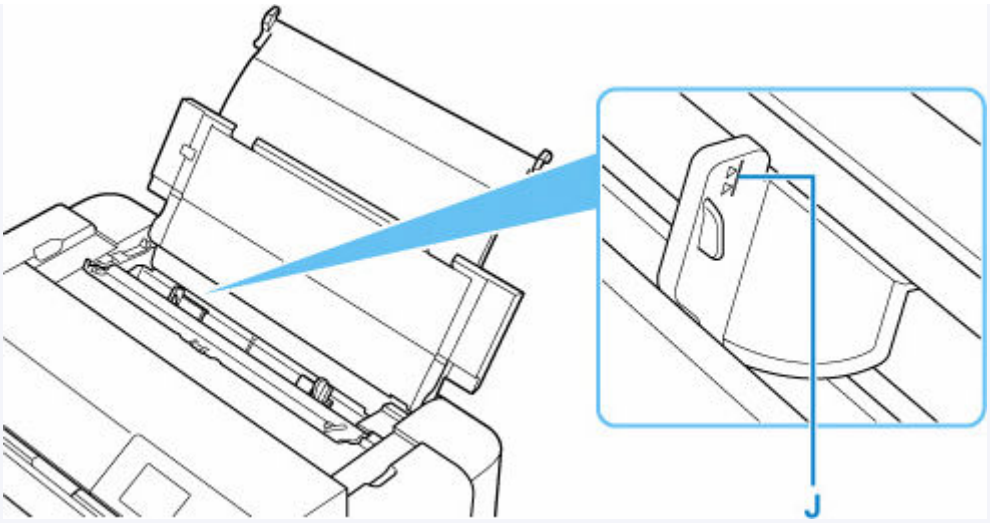

- For loading long-length paper, the leading edges of paper are lifted depending on the paper weight and printouts may be misaligned. Prevent the leading edges of paper from lifting by holding the parts protruding from the tray with your hand or other ways.

8. Close the feed slot cover gently.

The paper information registration screen for the top feed is displayed on the LCD.

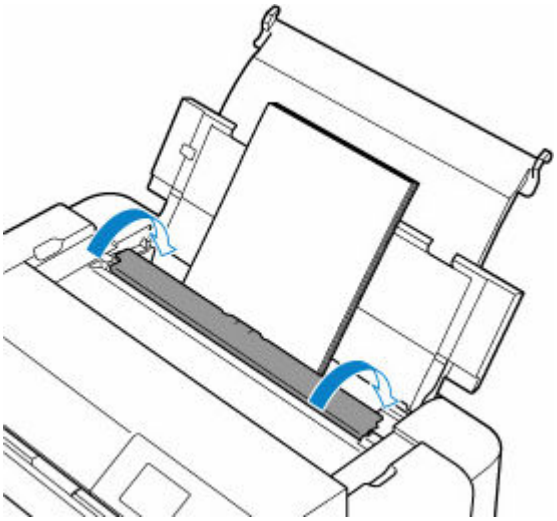

9. Select the size and type of paper loaded in the top feed at **Page size** and **Type**, select **Register**.

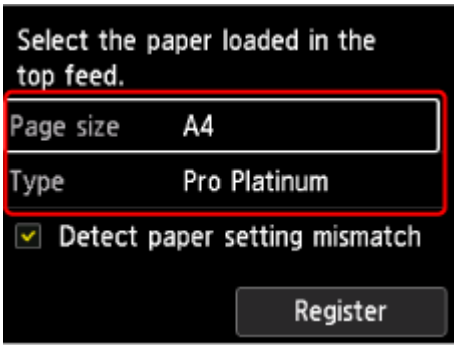

Note

- There are various types of paper, such as paper with a special surface coating for printing photos at optimal quality and paper suitable for documents. Each media type has specific preset settings (how ink is used and sprayed, distance from nozzles, etc.), that allow you to print to that type with optimal image quality. The wrong paper settings may cause poor printout color quality or scratches on the printed surface. If you notice blurring or uneven colors, increase the print quality setting and try printing again.
- To prevent incorrect printing, this printer has a function that detects whether the settings for the paper loaded on the top feed matches the paper settings. Before printing, make print settings in accordance with the paper settings. When this function is enabled, an error message is displayed if these settings do not match to prevent incorrect printing. When this error message is displayed, check and correct the paper settings.
- For printing on long-length paper, hold ejected paper with your hand or use the printer at the location that paper does not fall. If paper falls, the printed surface may get dirty or be damaged. If you hold paper with your hand, do not pull it forcibly while printing.

Precautions when printing on postcards

Important

- The address side cannot be printed from the operation panel.
- This printer cannot print on postcards affixed with photos or stickers.
- Return postcards cannot be printed from the operation panel and do not support borderless printing.
- Do not fold the return postcard. If a crease is formed, the printer will not be able to feed the postcard properly, and this condition will cause line shifts or a paper jam.
- Depending on the type of postcard, the paper size may not be detected. In that case, set the printer not to detect the paper width.

Note

- When printing on postcards or return postcards, load them with the side you want to print facing up and the post code facing down.

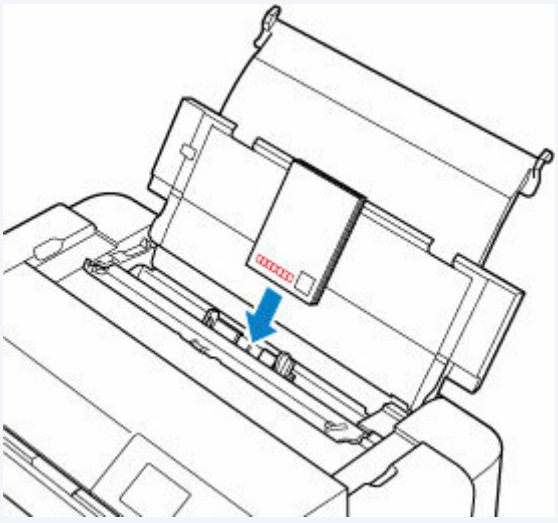

➡ Printing on Postcards (Windows)
➡ Printing on Postcards (macOS)

- When printing on each side of a postcard separately, you will get cleaner printing if you print the message side first and then print the address side.
- When holding the postcard, hold it by the edges as much as possible, and avoid touching the printed surface until the ink dries.
- We recommend Canon genuine photo paper for printing photos.

Loading Paper in the Manual Feed Tray

You can load one sheet of 8" x 10" (20 x 25 cm) size paper or larger in the manual feed tray at a time.

Important

- For the paper types (Canon genuine paper), size, and weight/thickness that can be used with the printer, see Media Types You Can Use.

Note

- We recommend Canon genuine photo paper for printing photos.
- Print in an environment (temperature and humidity) suitable to the paper in use. For the temperature and humidity conditions of Canon genuine papers, refer to the paper's packaging or the supplied instructions.
- Plain paper and postcard cannot be fed from the manual feed tray. When printing on plain paper or postcard, load it in the top feed.

1. Prepare paper.

   If paper is curled, flatten it.

   #### Note

   - If paper is curled, hold the curled corners and gently bend them in the opposite direction until the paper becomes completely flat.

     For details on how to flatten curled paper, see "Correct curl before loading paper." in Paper Is Smudged/Printed Surface Is Scratched/Ink Blots/Paper Curl.
   - When using **Photo Paper Plus Semi-gloss** SG-201, even if the sheet is curled, load one sheet at a time as it is. If you roll up this paper to flatten, this may cause cracks on the surface of the paper and reduce the print quality.

2. Open the manual feed tray (A), then extend the paper support (B).

3. Open the paper output tray (C) gently.

   #### Important

   - If the multi-purpose tray guide (D) is open, be sure to close it.

4. Open the output tray extension (E), then pull out the paper output support (F).

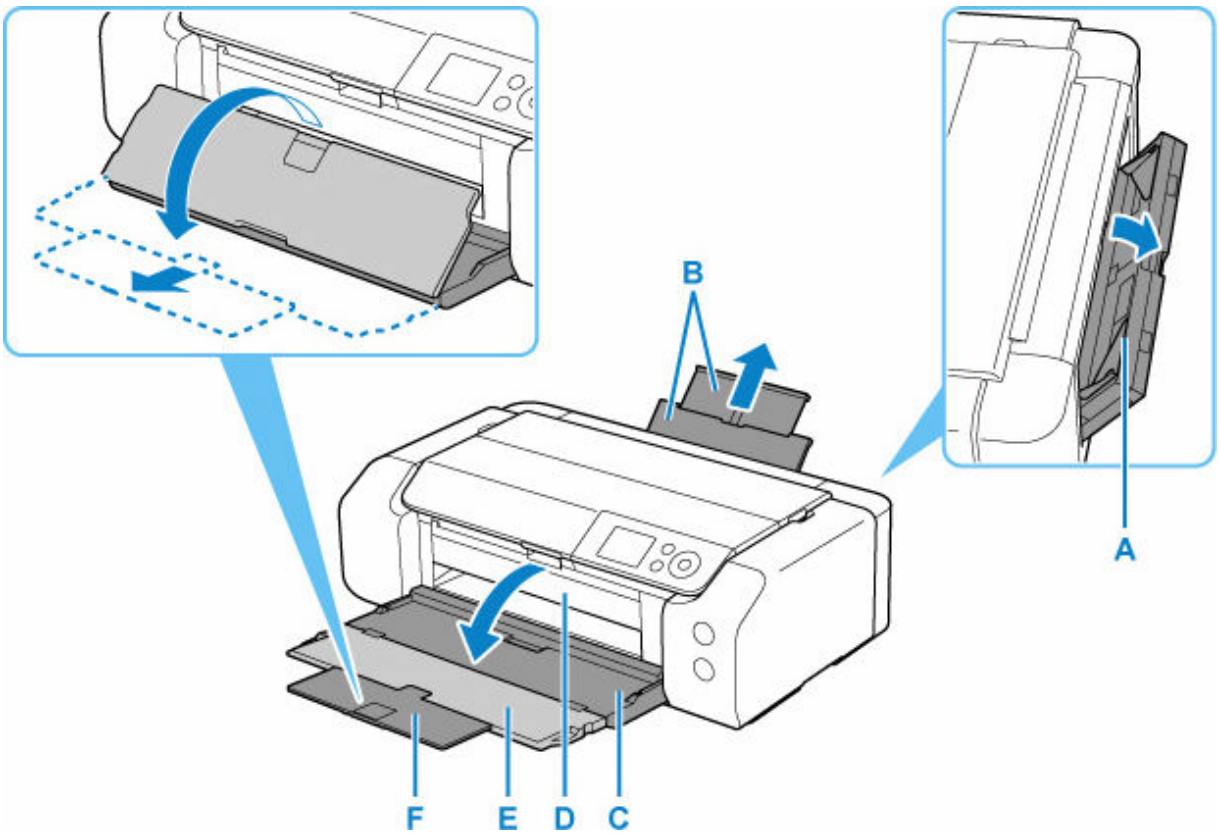

5. Slide the paper guides (G) to open them, and load ONLY ONE SHEET OF PAPER in the center of the manual feed tray WITH THE PRINT SIDE FACING YOU.

6. Slide the paper guides (G) to align them with both sides of the paper stack.

   Do not slide the paper guides too hard against the paper. The paper may not be fed properly.

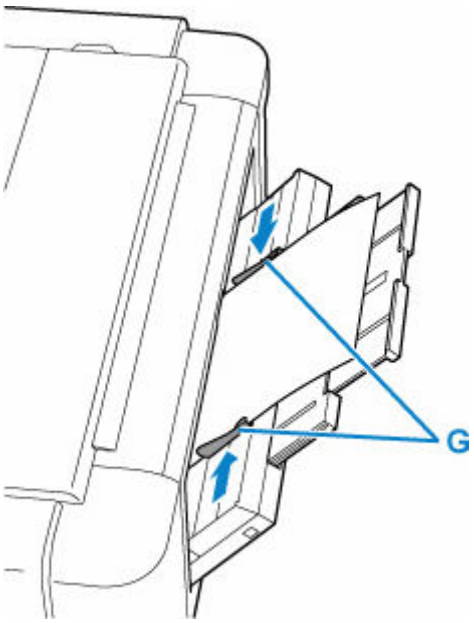

Important

- Always load paper in the portrait orientation (H). Loading paper in the landscape orientation (I) can cause paper jams.

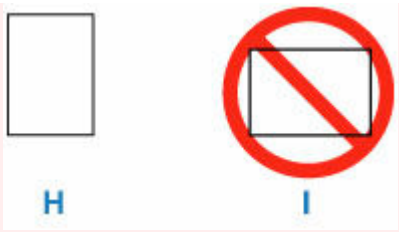

7. Check if the paper is set properly in the manual feed tray.

   Make sure that the paper is set firmly against the bottom of the manual feed tray and against the paper guides by slightly jiggling the paper up and down.

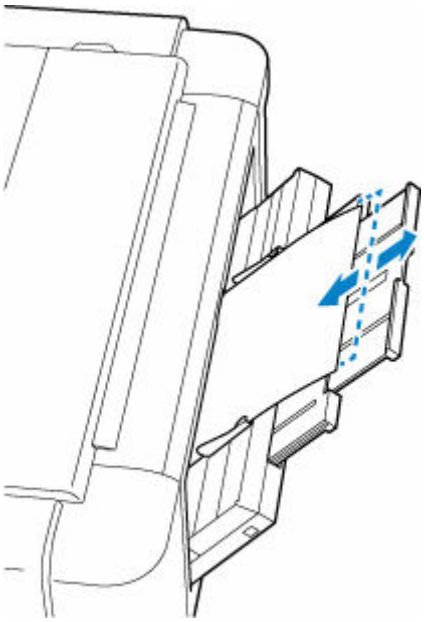

8. Select the size and type of paper loaded in the manual feed tray at **Page size** and **Type**, select **Register**.

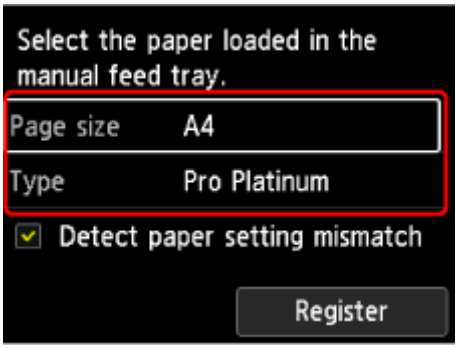

Note

- To continue printing from the manual feed tray, wait until printing is complete, then load the next sheet.
- There are various types of paper, such as paper with a special surface coating for printing photos at optimal quality and paper suitable for documents. Each media type has specific preset settings (how ink is used and sprayed, distance from nozzles, etc.), that allow you to print to that type with optimal image

quality. The wrong paper settings may cause poor printout color quality or scratches on the printed surface. If you notice blurring or uneven colors, increase the print quality setting and try printing again.

- To prevent incorrect printing, this printer has a function that detects whether the settings for the paper loaded on the manual feed tray matches the paper settings. Before printing, make print settings in accordance with the paper settings. When this function is enabled, an error message is displayed if these settings do not match to prevent incorrect printing. When this error message is displayed, check and correct the paper settings.
- For loading long-length paper, the leading edges of paper are lifted depending on the paper weight and printouts may be misaligned. Prevent the leading edges of paper from lifting by holding the parts protruding from the tray with your hand or other ways.

  When printing on long-length paper, hold ejected paper with your hand or use the printer at the location that paper does not fall. If paper falls, the printed surface may get dirty or be damaged. If you hold paper with your hand, do not pull it forcibly while printing.

Register Paper Information

By registering the paper size and the media type loaded in the top feed or the manual feed tray, you can prevent the printer from misprinting by displaying the message before printing starts when the paper size or the media type of the loaded paper differs from the paper settings.

Note

- The default setting for displaying the message which prevents misprinting varies depending on the printing method.

  ➡ Default Setting for Displaying the Message which Prevents Misprinting

When you load paper in the top feed and close the feed slot cover, or load paper in the manual feed tray:

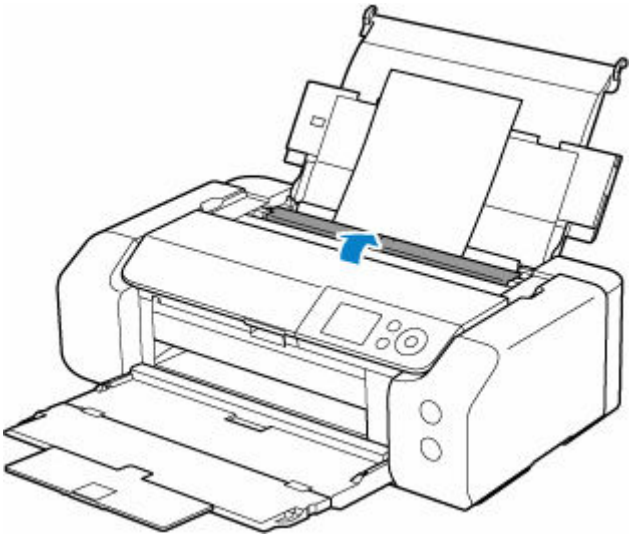

The screen to register the paper information is displayed.

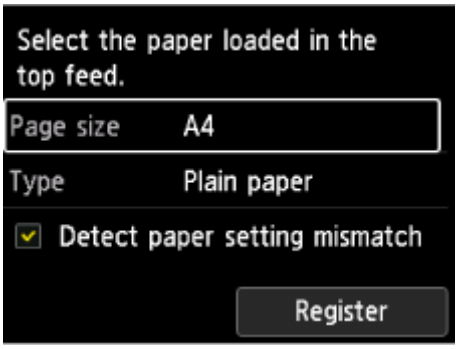

If the loaded paper matches the paper information displayed on the printer's LCD, select **Register**.

If it is different, select **Page size** or **Type**. Then register the correct paper information.

Important

- For the appropriate combination of the paper settings specified in the printer driver and the paper information registered in the printer, refer to the following.

  ➡ Paper Settings on the Printer Driver and the Printer (Media Type) (Windows)

- Paper Settings on the Printer Driver and the Printer (Media Type) (macOS)
- Paper Settings on the Printer Driver and the Printer (Paper Size) (Windows)
- Paper Settings on the Printer Driver and the Printer (Paper Size) (macOS)

When the paper settings specified when printing differ from the paper information registered in the printer:

Ex:

- Paper settings specified on the printer driver when printing: A5
- Paper information for the top feed registered in the printer: A4

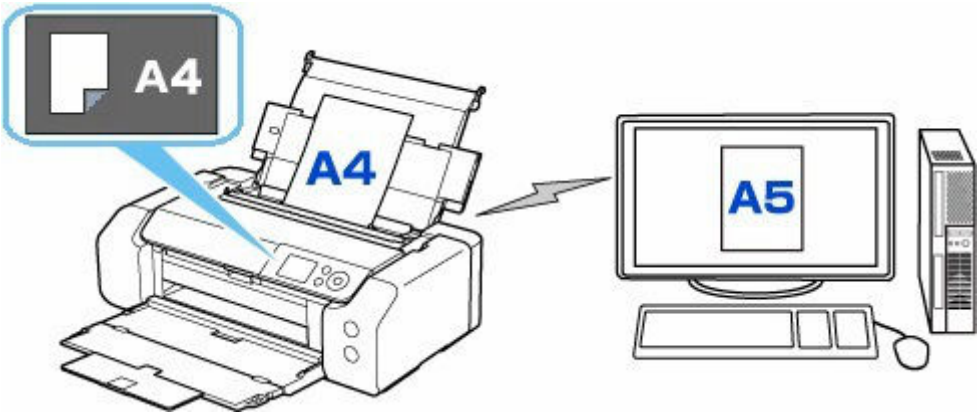

When you start printing, a message is displayed.Resolve the error according to the instruction on the screen.

- 2114

Default Setting for Displaying the Message which Prevents Misprinting

- **When you print without using the printer driver (when printing from the printer's operation panel or smartphone/tablet):**

  The message which prevents misprinting is enabled by default.

  To change whether to display a misprint prevention message when printing without using the printer driver:

  - Paper-related settings

- **When you print using the printer driver:**

  The message which prevents misprinting is disabled by default.

  To change whether to display a misprint prevention message when printing using the printer driver:

  - Changing the Printer Operation Mode (Windows)
  - Changing the Printer Operation Mode (macOS)

Important

- When the message which prevents misprinting is disabled:

The printer starts printing even though the paper settings for printing and the paper information registered to the printer are different.

Information about Paper

- Media Types You Can Use
- Paper Load Limit
- Handling Paper
- Before Printing on Art Paper
- Managing Paper Information on Printer Using Media Configuration Tool

Media Types You Can Use

For best results, choose paper designed for how you are printing. A variety of paper for documents as well as photos or illustrations is available from Canon. Use genuine Canon paper to print important photos, when possible.

- Media Types
- Page Sizes
- Paper Weight / Thickness
- Media Types You Cannot Use

Media Types

Genuine Canon paper

Note

- For warnings on use of the non-printable side, see each product's usage information.
- Page sizes and media types differ depending on the country or region where the paper is sold. For details on page sizes and media types, access the Canon website.
- Genuine Canon paper is not available in some countries or regions. Note that in the United States, Canon paper is not sold by model number. Instead, purchase paper by name.

Paper for printing documents:

- **Canon Red Label Superior** <WOP111>
- **Canon Océ Office Colour Paper** <SAT213>

Paper for printing photos:

- **Photo Paper Pro Platinum** <PT-101>
- **Photo Paper Plus Glossy II** <PP-201/PP-208/PP-301>
- **Photo Paper Pro Luster** <LU-101>
- **Photo Paper Plus Semi-gloss** <SG-201>
- **Matte Photo Paper** <MP-101>
- **Photo Paper Pro Premium Matte** <PM-101>
- **Premium Fine Art Smooth** <FA-SM1>
- **Premium Fine Art Rough** <FA-RG1>

Paper other than genuine Canon paper

- Plain Paper (including recycled paper)
- Greeting Card
- Card Stock

- Paper Load Limit

- Paper Settings on the Printer Driver and the Printer (Media Type) (Windows)
- Paper Settings on the Printer Driver and the Printer (Media Type) (macOS)

Note

- When using art paper, see Before Printing on Art Paper.

Page Sizes

You can use the following page sizes.

Note

- Page sizes and media types the printer supports differ depending on the OS you are using.

Standard sizes:

- top feed
  - Letter
  - Legal
  - 11"x17"(28x43cm)
  - A5
  - A4
  - A3
  - A3+
  - B5
  - B4
  - KG/4"x6"(10x15)
  - 5"x7"(13x18cm)
  - 7"x10"(18x25cm)
  - 9"x13"(23x33cm)
  - 11"x14"
  - 8"x10"(20x25cm)
  - 10"x12"(25x30cm)
  - 210x594mm
  - L(89x127mm)
  - 2L(127x178mm)
  - Square 5"
  - 12"x12"(30x30cm)
  - Hagaki
  - Hagaki 2
- manual feed tray

- Letter
- Legal
- 11"x17"(28x43cm)
- A4
- A3
- A3+
- B4
- 9"x13"(23x33cm)
- 11"x14"
- 13"x19" (Super B)
- 8"x10"(20x25cm)
- 10"x12"(25x30cm)
- 210x594mm
- 12"x12"(30x30cm)

Special sizes

Special page sizes must be within the following limits:

- top feed
  - Minimum size: 3.50 x 5.00 in. (89.0 x 127.0 mm)
  - Maximum size: 12.95 x 70.87 in. (329.0 x 1800.0 mm) *1
- manual feed tray
  - Minimum size: 8.00 x 10.00 in. (203.2 x 254.0 mm)
  - Maximum size: 13.00 x 70.87 in. (330.2 x 1800.0 mm) *1

*1 When printing on paper longer than 39.00 in. (990.6 mm), select **Photo Paper (Long-form Printing)** or **Fine Art Paper (Long-form Print)** in the paper type.

➡ Perform Long-form Printing (Windows)
➡ Perform Long-form Printing (macOS)

Paper Weight / Thickness

You can use paper in the following weight/thickness ranges.

* Do not use paper heavier or thicker than this, as it could jam in the printer.

- top feed

  Plain paper: From 17 to 28 lb (64 to 105 g /m^2)

  Specialty paper: Up to 101 lb (380 g /m^2)
- manual feed tray

  Specialty paper: Up to 101 lb (380 g /m^2) / from 4 to 23.6 mil (0.1 to 0.6 mm)

Media Types You Cannot Use

Do not use the following types of paper. Using such paper will cause not only unsatisfactory results, but also the printer to jam or malfunction.

- Folded, curled, or wrinkled paper
- Damp paper
- Paper that is too thin
- Paper that is too thick
- Paper with unstraightened edges like manualy cut paper.
- Picture postcards
- Return postcard that has been folded once
- Postcards affixed with photos or stickers
- Envelopes
- Any type of paper with holes
- Paper that is not rectangular
- Paper bound with staples or glue
- Paper with an adhesive surface on the back such as label seal
- Paper decorated with glitter, etc.

Paper Load Limit

This section shows the paper load limits of the top feed, the manual feed tray, and the paper output tray.

- Paper Load Limits of Top Feed and Manual Feed Tray
- Paper Load Limit of Paper Output Tray

Note

- Page sizes and media types differ depending on the country or region where the paper is sold. For details on page sizes and media types, access the Canon website.

Paper Load Limits of Top Feed and Manual Feed Tray

Genuine Canon Paper

Paper for printing documents:

Media Name <Model No.>	Top Feed
Canon Red Label Superior <WOP111>	Approx. 100 sheets
Canon Océ Office Colour Paper <SAT213>	Approx. 100 sheets

Paper for printing photos:

Media Name <Model No.>	Top Feed	Manual Feed Tray
Photo Paper Pro Platinum <PT-101>*1 **Photo Paper Plus Glossy II** <PP-201/PP-208/PP-301>*1 **Photo Paper Pro Luster** <LU-101>*1 **Photo Paper Plus Semi-gloss** <SG-201>*1 **Matte Photo Paper** <MP-101>	KG/4"x6"(10x15), L(89x127mm), Square 5", Hagaki: 20 sheets A4, A3, Letter, 5"x7"(13x18cm), 8"x10"(20x25cm), 2L(127x178mm): 10 sheets A3+, 10"x12"(25x30cm), 9"x13"(23x33cm), 11"x14": 1 sheet	1 sheet
Photo Paper Pro Premium Matte <PM-101> **Premium Fine Art Smooth** <FA-SM1> **Premium Fine Art Rough** <FA-RG1>	N/A	1 sheet

Paper other than Genuine Canon Paper

Common Name	Top Feed	Manual Feed Tray
Plain Paper (including recycled paper)*2	A5, A4, B5, Letter: Approx. 100 sheets	N/A

	A3, B4, Legal, 11"x17"(28x43cm): Approx. 50 sheets	
Greeting Card	1 sheet	1 sheet
Card Stock	1 sheet	1 sheet

*1 Feeding from a loaded stack of paper may leave marks on the printed side or prevent efficient feeding. In this case, load one sheet at a time.
*2 Normal feeding at maximum capacity may not be possible with some types of paper, or under very high or low temperature or humidity. In this case, load half the amount of paper or less.

Note

- When using non-Canon genuine specialty paper, load one sheet at a time in the top feed or manual feed tray.

Paper Load Limit of Paper Output Tray

Genuine Canon Paper

Paper for printing documents:

Media Name <Model No.>	Paper Output Tray
Canon Red Label Superior <WOP111> **Canon Océ Office Colour Paper** <SAT213>	Approx. 50 sheets

Paper other than Genuine Canon Paper

Common Name	Paper Output Tray
Plain Paper (including recycled paper)	Approx. 50 sheets

When continuing printing with paper other than the above, we recommend removing already printed paper from the paper output tray to avoid smearing or discoloration.

Handling Paper

- Be careful not to rub or scratch the surfaces of any types of paper when handling.
- Hold the paper as closely as possible to its edges and try not to touch the printing surface. The print quality may be degraded if the printing surface is smudged with sweat or oil that comes from your hands.
- Do not touch the printed surface until the ink is dried. Even when the ink is dried, be careful not to touch the printed surface as much as possible when handling. Due to the nature of the pigment ink, the ink on the printed surface may be removed when being rubbed or scratched.
- Take out only the necessary number of paper from the package, just before printing.
- To avoid curling, when you do not print, put unused paper back into the package and keep it on a level surface. And also, store it avoiding heat, humidity, and direct sunlight.

Before Printing on Art Paper

When using art paper, dust is liable to be generated.

It is therefore recommended that paper dust be removed on art paper just before printing.

You will need a soft hair brush (or similar brush used to clean office automation equipment).

The wider the brush, the more effective it will be.



OK - soft brush made from material such as polypropylene, polyethylene, horse hair or goat hair.

Important

- Be sure not to use brushes as shown below. The printing surface may be damaged.



Not OK - brush made from hard material, cloth or washcloth, sticky and abrasive materials.

Paper dust removal procedure:

1. Check that the brush is not wet and free from dust or dirt.
2. Brush the overall printing surface carefully in one direction.

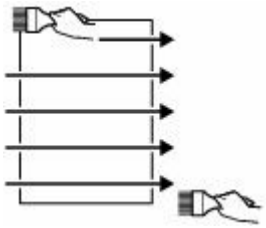

Important

- Be sure to brush all the way across the paper; do not start brushing at the middle or stop halfway.
- Be careful not to touch the printing surface as much as possible.

3. To complete the removal of paper dust, brush the paper in the other direction from top to bottom.

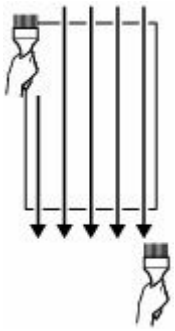

Settings

- **Changing Settings from Operation Panel**
  - LCD and Operation Panel
  - Setting Items on Operation Panel
  - Setting Administrator Password on Operation Panel
- **Changing Printer's Setting Using Web Browser**
  - Start up Remote UI
  - Changeable Setting Items Using Remote UI
  - Setting Passwords Using Remote UI
  - Registering Printer's Root Certificate to Web Browser for SSL Communication
  - Registering Printer's Root Certificate to Local Computer for SSL Communication
  - Generating Server Certificate
- **Network Setting**
  - Printer Connection Methods
  - Another Printer Found with Same Name
  - Printing Network Settings
  - Network Status and Troubleshooting
  - Checking Printer Connection Status Using Wi-Fi Connection Assistant
  - Sharing the Printer on a Network (Windows)
  - Sharing the Printer on a Network (macOS)
- **Set Up/Manage Security**

Changing Settings from Operation Panel

- LCD and Operation Panel
- Setting Items on Operation Panel
- Setting Administrator Password on Operation Panel

LCD and Operation Panel

Turning on the printer displays the HOME screen.

Using the ▲, ▼ button to select an item from the menu and pressing the **OK** button enable you to perform each setting.

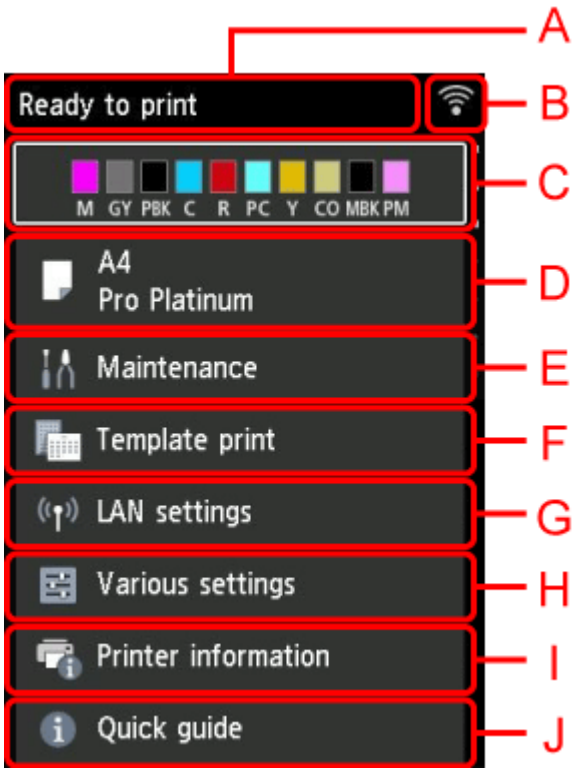

A: Printer status display area

Displays printer status, messages, and other information.

➡ Notification Messages

B: Network

Displays network status by the icon.

The icon differs depending on the network of use or the network status.

 Wi-Fi is enabled and the printer is connected to the wireless router.

Note

- Depending on the signal state, the icon will change.

   (Signal strength: 81 % or more): You can use the printer over Wi-Fi without any problems.

   (Signal strength: 51 % or more): The problem such as the printer cannot print may occur according to the network status. We recommend placing the printer near the wireless router.

 (Signal strength: 50 % or less): The problem such as the printer cannot print may occur. Place the printer near the wireless router.

 Wi-Fi is enabled but the printer is not connected to the wireless router.

 Wired LAN is enabled.

 Wireless Direct is enabled.

 Network is disabled.

C: Ink status display area

Displays the ink status. Selecting this item enables you to check the remaining amount of ink and model number of ink tank.

➡ Checking Ink Level

D: Paper settings display area

Displays information about the paper in the top feed. Selecting this item enables you to specify the size and type of paper loaded in the top feed.

E: Maintenance

Select this item to perform maintenance of the printer.

F: Template print

You can print and make as lined or graph paper.

G: LAN settings

You can perform settings relating to network.

H: Various settings

You can change printer settings such as settings when printing.

I: Printer information

Displays printer information and error histories.

J: Quick guide

Displays how to operate the printer and QR code accessing to the Online Manual.

Note

- When printing is in progress, you cannot select grayed out items.

Notification Messages

When the ink is low or there is another notification, **New notice** appears in the printer status display area.

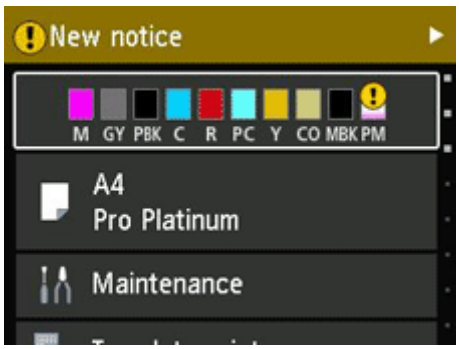

Press the ► button to display the **Notice list** screen to check messages.

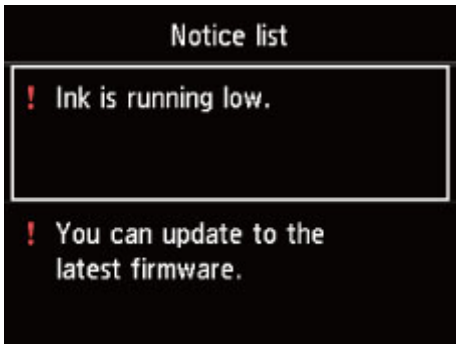

Setting Items on Operation Panel

Note

- The administrator password is required to change some setting items if it is enabled for changing settings using the operation panel.

  For more on setting items which the administrator password is required:

  ➡ Setting Administrator Password on Operation Panel



Maintenance

Template print

➡ Printing Templates Such as Lined or Graph Paper

LAN settings

Various settings

- **Printer settings**
  - **Security settings**
  - **Print settings**

- **LAN settings**
- **Other printer settings**
- **Language selection**
- **Firmware update**
- **Paper-related settings**
- **Power control**
- **Quiet setting**
- **Auto maintenance settings**
- **Administrator password settings**
  - ➡ Setting Administrator Password on Operation Panel
- **Reset settings**

- **Web service setup**



Printer information

Maintenance

This item is displayed on the HOME screen.

- **Nozzle Check**

  Prints out the nozzle check pattern.

  ➡ Checking for Nozzle Clogging

- **Cleaning**

  Select this to clean the print head.

  ➡ Cleaning the Print Head

- **Deep Cleaning**

  Use this mode if no ink is ejected at all or if **Cleaning** does not solve the problem.

  ➡ Deep Print Head Cleaning

- **Print Head Alignment**

  Adjusts the alignment of print head.

  ➡ Automatic Adjustment to Straighten Lines and Align Colors
  ➡ Manual Adjustment to Straighten Lines and Align Colors

- **Roller Cleaning**

  Select this mode when cleaning the paper feed rollers.

  ➡ Cleaning Paper Feed Rollers

- **Bottom Plate Cleaning**

  Select this mode when cleaning the inside of the printer.

  ➡ Performing Bottom Plate Cleaning

LAN settings

This item is displayed on the HOME screen.

Important

- The administrator password is required to change the settings if it is enabled to change the settings on the operation panel using the administrator password.

- Wi-Fi
- Wireless Direct
- Wired LAN
- Advanced

Wi-Fi

- **See settings**

  The network settings information of the printer appears when it is connected by Wi-Fi. (Some setting items are not displayed depending on the printer settings.)

Items	Setting
Connection	Enabled (connected)/Enabled (disconnected)/Disable
Network name (SSID)	XXXXXXXXXXXXXXX XXXXXXXXXXXXXXX
Frequency	2.4 GHz/5 GHz
Wi-Fi security	Disable / WPA-PSK (AES) / WPA2-PSK (AES) / WPA/WPA2-PSK / WPA3-SAE (AES) / WPA2/WPA3-PSK / WPA-EAP (AES) / WPA2-EAP (AES) / WPA3-EAP (AES) / WPA/WPA2-EAP (AES) / WPA2/WPA3-EAP (AES)
Signal strength (%)	XXX
IPv4 address	XXX. XXX. XXX. XXX
IPv4 subnet mask	XXX. XXX. XXX. XXX
IPv4 default gateway	XXX. XXX. XXX. XXX
IPv6 link-local address	XXXX: XXXX: XXXX: XXXX: XXXX: XXXX: XXXX: XXXX
IPv6 manual address	XXXX: XXXX: XXXX: XXXX: XXXX: XXXX: XXXX: XXXX
IPv6 manual prefix length	XXX
IPv6 stateless address 1	XXXX: XXXX: XXXX: XXXX: XXXX: XXXX: XXXX: XXXX
IPv6 stateless prefix length 1	XXX
IPv6 stateless address 2	XXXX: XXXX: XXXX: XXXX: XXXX: XXXX: XXXX: XXXX
IPv6 stateless prefix length 2	XXX

IPv6 stateless address 3	XXXX: XXXX: XXXX: XXXX: XXXX: XXXX: XXXX: XXXX
IPv6 stateless prefix length 3	XXX
IPv6 stateless address 4	XXXX: XXXX: XXXX: XXXX: XXXX: XXXX: XXXX: XXXX
IPv6 stateless prefix length 4	XXX
IPv6 default gateway 1	XXXX: XXXX: XXXX: XXXX: XXXX: XXXX: XXXX: XXXX
IPv6 default gateway 2	XXXX: XXXX: XXXX: XXXX: XXXX: XXXX: XXXX: XXXX
IPv6 default gateway 3	XXXX: XXXX: XXXX: XXXX: XXXX: XXXX: XXXX: XXXX
IPv6 default gateway 4	XXXX: XXXX: XXXX: XXXX: XXXX: XXXX: XXXX: XXXX
MAC address (Wi-Fi)	XX: XX: XX: XX: XX: XX
Printer name	XXXXXXXXXXXXXXX
Bonjour service name	XXXXXXXXXXXX XXXXXXXXXXXX XXXXXXXXXXXX XXXXXXXXXXXX

("XX" represents alphanumeric characters.)

- **Enable/disable Wi-Fi**

  Enables/disables Wi-Fi.

- **Wi-Fi setup**

  Selects the setup method for Wi-Fi connection.

  - **Easy wireless connect**

    Select if you specify the settings of the access point information to the printer directly from a device (e.g. smartphone, or tablet) without operating the wireless router. Follow the on-screen instructions of the connecting device for the setup procedure.

  - **Manual connect**

    Select when you perform settings for Wi-Fi manually using the operation panel of the printer.

  - **WPS (Push button method)**

    Select when you perform settings for Wi-Fi using a wireless router supporting a Wi-Fi Protected Setup (WPS) push button method. Follow the on-screen instructions during setup.

  - **Other connection types**

    - **WPS (PIN code method)**

      Select when you perform settings for Wi-Fi using a wireless router supporting a Wi-Fi Protected Setup (WPS) PIN code method. Follow the on-screen instructions during setup.

Wireless Direct

- **See settings**

  The network settings information of the printer appears when it is connected by the wireless direct. (Some setting items are not displayed depending on the printer settings.)

  Note

  - To show or hide the password, select **Show password**/**Hide password** in the **Wireless Direct setting list** screen.

Items	Setting
Connection	Enable/Disable
Network name (SSID)	DIRECT-XXXXXXXXX XXXXXXXXXXXXXXXX
Password	XXXXXXXXXX
Frequency	2.4 GHz/5 GHz
Wi-Fi security	WPA2-PSK(AES)
No. of printers connected now	XX/XX
IPv4 address	XXX. XXX. XXX. XXX
IPv4 subnet mask	XXX. XXX. XXX. XXX
IPv4 default gateway	XXX. XXX. XXX. XXX
IPv6 link-local address	XXXX: XXXX: XXXX: XXXX: XXXX: XXXX: XXXX: XXXX
MAC address (Wi-Fi)	XX: XX: XX: XX: XX: XX
Printer name	XXXXXXXXXXXXXXX
Bonjour service name	XXXXXXXXXXXX XXXXXXXXXXXX XXXXXXXXXXXX XXXXXXXXXXXX

("XX" represents alphanumeric characters.)

- **Connect to smartphone**

  Enables to connect the smartphone to the printer by reading the QR code displayed on the LCD with the smartphone, or also by manually obtaining the network name and password.

- **Enable/disable Wireless Direct**

  Enables/disables Wireless Direct.

- **Change network name (SSID)**

  Changes the identifier (SSID/the printer's name displayed on a Wi-Fi Direct compatible device) for Wireless Direct.

- **Change password**

  Changes the password for Wireless Direct.

- **Connection request confirmation**

  Selecting **ON** displays the confirmation screen when a Wi-Fi Direct compatible device is connecting the printer.

- **2.4GHz/5GHz Switch**

  Sets the frequency to use.

Wired LAN

- **See settings**

  The network settings information of the printer appears when it is connected by wired LAN. (Some setting items are not displayed depending on the printer settings.)

Items	Setting
Connection	Enabled (connected)/Enabled (disconnected)/Disable
IPv4 address	XXX. XXX. XXX. XXX
IPv4 subnet mask	XXX. XXX. XXX. XXX
IPv4 default gateway	XXX. XXX. XXX. XXX
IPv6 link-local address	XXXX: XXXX: XXXX: XXXX: XXXX: XXXX: XXXX: XXXX
IPv6 manual address	XXXX: XXXX: XXXX: XXXX: XXXX: XXXX: XXXX: XXXX
IPv6 manual prefix length	XXX
IPv6 stateless address 1	XXXX: XXXX: XXXX: XXXX: XXXX: XXXX: XXXX: XXXX
IPv6 stateless prefix length 1	XXX
IPv6 stateless address 2	XXXX: XXXX: XXXX: XXXX: XXXX: XXXX: XXXX: XXXX
IPv6 stateless prefix length 2	XXX
IPv6 stateless address 3	XXXX: XXXX: XXXX: XXXX: XXXX: XXXX: XXXX: XXXX
IPv6 stateless prefix length 3	XXX
IPv6 stateless address 4	XXXX: XXXX: XXXX: XXXX: XXXX: XXXX: XXXX: XXXX
IPv6 stateless prefix length 4	XXX
IPv6 default gateway 1	XXXX: XXXX: XXXX: XXXX: XXXX: XXXX: XXXX: XXXX
IPv6 default gateway 2	XXXX: XXXX: XXXX: XXXX: XXXX: XXXX: XXXX: XXXX

IPv6 default gateway 3	XXXX: XXXX: XXXX: XXXX: XXXX: XXXX: XXXX: XXXX
IPv6 default gateway 4	XXXX: XXXX: XXXX: XXXX: XXXX: XXXX: XXXX: XXXX
MAC address (Wired LAN)	XX:XX:XX:XX:XX:XX
Printer name	XXXXXXXXXXXXXX
Bonjour service name	XXXXXXXXXXX XXXXXXXXXXX XXXXXXXXXXX XXXXXXXXXXX

("XX" represents alphanumeric characters.)

- **Enable/disable Wired LAN**

  Enables/disables wired LAN.

Advanced

- **Set printer name**

  Specifies the printer name.

  Note

  - You cannot use the same printer name as that already used for other LAN connected devices.
  - You cannot use a hyphen for the initial or last character of the printer name.

- **TCP/IP settings**

  Performs IPv4 or IPv6 setting.

- **WSD settings**

  Setting items when you use WSD (one of the network protocols supported in Windows).

  - **Enable/disable WSD**

    Selects whether WSD is enabled or disabled.

    Note

    - When this setting is enabled, the printer icon is displayed on the Network Explorer in Windows.

  - **Optimize inbound WSD**

    Selecting **Enable** allows you to receive the WSD printing data faster.

  - **Timeout settings**

    Specifies the timeout length.

- **Bonjour settings**

  Setting items when you use Bonjour.

◦ **Enable/disable Bonjour**

Selecting **Enable** allows you to use Bonjour to perform the network settings.

◦ **Service name**

Specifies the Bonjour service name.

Note

- You cannot use the same service name as that already used for other LAN connected devices.

- **LPD settings**

Enables/disables the LPD setting.

- **RAW settings**

Enables/disables RAW printing.

- **LLMNR settings**

Enables/disables LLMNR (Link-Local Multicast Name Resolution). Selecting **Enable** allows the printer to detect printer's IP address from the printer name without a DNS server.

- **IPP settings**

Selecting **Enable** allows you to print via the network with the IPP protocol.

- **Wi-Fi DRX settings**

Selecting **Enable** allows you to activate discontinuous reception when using Wi-Fi (discontinuous reception).

Note

- Depending on the Wi-Fi router used, discontinuous reception may not be activated even though **Enable** is selected.
- Discontinuous reception is enabled only while the printer is on standby. (The LCD is in the screen saver mode.)

- **Wired LAN DRX settings**

Selecting **Enable** allows you to activate discontinuous reception when the printer is connected to a device compatible with wired LAN.

- **Easy wireless connect**

When set to **Auto start: ON**, the device will automatically put into the standby mode for easy wireless connect.

To prevent the device from putting into the standby mode for easy wireless connect at unintended times, set to **Auto start: OFF**.

Security settings

This item is displayed when you select **Printer settings** from  **Various settings** on the HOME screen.

Important

- The administrator password is required to change the settings if it is enabled to change the settings on the operation panel using the administrator password.

- **Recommended security settings**

  Enables to set the security appropriate for your environment. Check the Security Settings Navigator for details on each setting.

  ➡ Set Up/Manage Security

- **Lockout settings**

  Set whether to lock password input for a period of time after multiple incorrect attempts.

  - **Enable/disable lockout**

    Enable or disable the lockout setting.

  - **Lockout threshold (times)**

    Set the number of attempts before input is locked.

  - **Lockout period**

    Set the length of time to lock input for.

- **Use of Remote UI**

  Set whether to lock use of the Remote UI.

- **Password policy settings**

  Set whether to limit the characters that can be used when setting or inputting passwords.

- **IPsec settings**

  Selecting **Enable** allows you to specify the IPsec security.

- **IEEE802.1X/EAP settings**

  Setting item when you use IEEE802.1X/EAP (WPA/WPA2/WPA3 Enterprise).

Note

- Refer to the Security Guide for details on **Security settings**.

  ➡ Set Up/Manage Security

Print settings

This item is displayed when you select **Printer settings** from  **Various settings** on the HOME screen.

- **Prevent paper abrasion**

  Use this setting only if the print surface becomes smudged.

  Important

  - Be sure to set this back to **OFF** after printing since it may result in lower print quality.

- **Adjust horizontal print position**

  Adjusts the print position when the left/right margins are not aligned.

  You can adjust the left/right margins in increments of 0.01 inch/0.1 mm between -0.12 inch/-3 mm and +0.12 inch/+3 mm centered on the horizontal center of the paper.

  Important

  - For A3, A3+ and 12" x 12" (30 x 30 cm), you can adjust the left/right margins between -0.06 in. (-1.5 mm) and +0.06 in. (+1.5 mm) even if you specify the value over 0.06 in. (1.5 mm).

- **Magnification level for borderless**

  Sets magnification level when performing borderless printing in the following print method.

  Normally, the image is enlarged slightly and printed so that there is no border. If the border remains, change this setting.

  - IPP printing such as AirPrint

- **IPP print settings**

  Sets the image quality and paper settings for IPP printing.

  For example, when printing using AirPrint or Mopria Print Service, this setting value is applied.

  - **Print quality settings**
    - **Color mode**

      Select the color correction method suited to the type of document to be printed.

      Important

      - Even if you select ICC profile, printing is performed without ICC profile if ICC profile is not included in the paper information added with Media Configuration Tool. Even if ICC profile is included in the paper information, printing will fail and the paper will be ejected as the blank paper if the Profile is not supported with the printer.

    - **Clear coating**

      Set Clear Coating. Perform Clear Coating to adjust glossiness by applying the Chroma Optimizer (CO) ink to the printed surface.

- **Auto**

  Automatically sets the Clear Coating area and whether to perform Clear Coating.

- **Overall**

  Applies Clear Coating to the entire print area including the margins outside the image area (print area).

  Improves the glossiness of the entire print area including the margins by applying Clear Coating to the entire surface.

  This setting consumes the most Chroma Optimizer (CO) ink.

- **Printed areas**

  Applies Clear Coating to the margins and the non-white areas in the image.

  Set this when you want to improve the glossiness of only the image area.

- **OFF**

  Prints without performing Clear Coating.

  Compared to when Clear Coating is performed, the image quality may seem lower or the print surface may be more susceptible to scratches.

Note

- If Clear Coating is unnecessary (for example, when laminating the printed image), select **OFF**.

Important

- Depending on the paper type and print quality, it may not work even if you select **Overall**/**Printed areas**/**OFF**.
- If you select **OFF** for **Clear coating**, the Chroma Optimizer (CO) ink will not be used during printing, but it will be used during automatic maintenance to maintain the printer performance.

Other printer settings

This item is displayed when you select **Printer settings** from  **Various settings** on the HOME screen.

Important

- The administrator password is required to change the settings if it is enabled to change the settings on the operation panel using the administrator password.

- **Date/time settings**

  Sets the current date and time.

- **Date display format**

  Selects the display format of the date displayed on the LCD.

- **Daylight saving time setting**

  Enables/disables the summer time setting. If you select **ON**, you can select additional sub-settings. This setting may not be available depending on the country or region of purchase.

  - **Start date/time**

    Sets the date and time that summer time starts.

    Month: Specify the month.

    Week: Specify the week.

    DOW: Specify the day of the week.

    The screen to set the shift time to start summer time will be displayed after specifying the items above and selecting **OK**.

    After specifying the shift time and selecting **OK**, you can specify the end date/time.

  - **End date/time**

    Sets the date and time that summer time ends.

    Month: Specify the month.

    Week: Specify the week.

    DOW: Specify the day of the week.

    The screen to set the shift time to end summer time will be displayed after specifying the items above and selecting **OK**.

    Specify the shift time and select **OK**.

- **Key repeat**

  Enables/Disables continuous input by pressing and holding down the ▲ ▼ ◄ ► button when selecting a menu or setting item.

- **Keyboard layout**

  Enables to change the keyboard layout.

- **Ink level monitor**
  - **Timing for ink level notification**

    Sets the timing for ink level notification to the local service center.

    Selecting **Check settings** allows you to check the notification timing set for each color.

Language selection

This item is displayed when you select **Printer settings** from  **Various settings** on the HOME screen.

Changes the language for the messages and menus on the LCD.

Important

- The administrator password is required to change the settings if it is enabled to change the settings on the operation panel using the administrator password.

Firmware update

This item is displayed when you select **Printer settings** from  **Various settings** on the HOME screen.

You can update the firmware of the printer, check the firmware version, or perform settings of a notification screen, a DNS server and a proxy server.

Important

- The administrator password is required to change settings if it is enabled for changing settings using the operation panel.

Note

- If LAN is disabled, you cannot use **Install update**, **DNS server setup**, **Proxy server setup**.

- **Install update**

  Updates the printer's firmware.

  ➡ Firmware update

- **Check current version**

  You can check the current firmware version.

- **Update notification settings**

  You can set the printer to display the firmware update information on the LCD when the firmware update is available.

  When **Idle/Power off** is selected, the printer informs you of the update during idle and the update information also appears when you press the **ON** button.

- **Auto update settings**

  Select **ON** to keep the firmware updated to the latest version.

- **DNS server setup**

  Performs settings for a DNS server. Select **Auto setup** or **Manual setup**. If you select **Manual setup**, follow the display on the LCD to perform settings.

- **Proxy server setup**

  Performs settings for a proxy server. Follow the display on the LCD to perform settings.

Paper-related settings

This item is displayed when you select **Printer settings** from  **Various settings** on the HOME screen.

- **Top feed paper settings**

  Set the paper size and the media type of paper loaded in the top feed.

- **Manual feed tray paper settings**

  Set the paper size and the media type of paper loaded in the manual feed tray.

- **Check paper replacement**

  If you select **ON**, the printer detects that the paper is loaded or removed.

  When the paper registration screen is displayed after loading paper, register the paper size and the media type.

- **Detect paper setting mismatch**

  If you select **Enable**, the printer detects whether the paper size and the media type are the same as those registered. If printing starts with the settings that do not match, an error message appears on the LCD.

  ➡ Register Paper Information

- **Advanced paper settings**

  Perform the following settings for each media type.

  - **Paper thickness (head height)**
  - **Extension for borderless printing**
  - **Unidirectional printing**
  - **Pause between scans**
  - **Pause between pages**
  - **Detect paper width**
  - **Reset paper settings by paper**

  Selecting **Reset paper settings for all paper**, **Yes** and pressing the **OK** button initializes the settings. Entering the administrator password is required if it is enabled.

- **Print advanced paper settings**

  Prints out each setting specified in **Advanced paper settings**.

- **Reset paper settings for all paper**

  Initializes each setting specified in **Advanced paper settings**.

  Entering the administrator password is required if it is enabled.

Power control

This item is displayed when you select **Printer settings** from  **Various settings** on the HOME screen.

Allows you to turn on/off the printer automatically to save electricity. In addition, you can specify the time and day to turn it on/off.

Important

- The administrator password is required to change settings if it is enabled for changing settings using the operation panel.

Note

- If this setting is changed, power consumption may increase.

- **Use auto power control**
  - **Auto power off**

    Specifies the length of time to turn off the printer automatically when no operation is made or no printing data is sent to the printer.
  - **Auto power on**

    Selecting **ON** enables the printer to turn on automatically when printing data is sent to the printer.
- **Use scheduling**

  Specifies the time to turn on/off the printer automatically for each day of the week.
- **Do not use power control**

  Disables the function to turn on/off the printer automatically.

Quiet setting

This item is displayed when you select **Printer settings** from  **Various settings** on the HOME screen.

Enable this function on the printer if you want to reduce the operating noise, such as when printing at night.

Important

- The administrator password is required to change the settings if it is enabled to change the settings on the operation panel using the administrator password.

- **ON**

  Select to reduce the operating noise when printing.

  ### Important

  - Operating speed is reduced compared to when **OFF** is selected.
  - This function may not be so effective depending on the printer's setting. Furthermore, certain noise, such as when the printer is preparing for printing, is not reduced.

- **OFF**

  Select when you do not use the quiet mode.

Note

- You can set **Quiet setting** from the operation panel of the printer or the printer driver. No matter how you set the quiet mode, the mode is applied when you perform operations from the operation panel of the printer or printing from the computer.

Auto maintenance settings

This item is displayed when you select **Printer settings** from  **Various settings** on the HOME screen.

Important

- The administrator password is required to change settings if it is enabled for changing settings using the operation panel.

- **Auto nozzle check**

  Enables/Disables automatic nozzle checking.

Reset settings

This item is displayed when you select **Printer settings** from  **Various settings** on the HOME screen.

You can set the settings back to the default.

Important

- The administrator password is required to change the settings if it is enabled to change the settings on the operation panel using the administrator password.

- **Web service setup only**

  Sets the Web service settings back to the default.

- **LAN settings only**

  Sets the LAN settings back to the default.

- **Settings only**

  Returns the settings such as the paper size, media type, or other setting items back to the default. The LAN settings is not returned back to the default.

- **Reset all**

  Sets all settings you made to the printer back to the default. The administrator password specified for the printer is initialized.

  ➡ Default Administrator Password

  After resetting, perform setup again as necessary.

  ### Note

  - You cannot set the following setting items back to the default:
    - Security policy
    - The language displayed on the LCD
    - The current position of the print head
    - CSR (Certificate Signing Request) for encryption method (SSL/TLS) setting
    - Media information registered to the printer by using Media Configuration Tool

- **Security policy only**

  The Security administrator password and all Security policies will be reset. If a security administrator password has been set, the security administrator password is required to perform the reset.

  ➡ Set Up/Manage Security

Note

- User mode settings restricted by the security policy will not be changed. (Feature settings will not be returned to the settings prior to security restrictions under the security policy.)

Web service setup

This item is displayed when you select  **Various settings** on the Home screen.

Important

- The administrator password is required to change settings if it is enabled for changing settings using the operation panel.

- **Settings for Data Sending**

  Performs settings for the following data sending.

  - **Data necessary for services**
  - **Data about your activities**

- **Web service connection setup**

  The following setting items are available.

  - **Cloud Printing Center setup**

    Registers/Deletes the printer to/from Canon Cloud Printing Center.

  - **Check Web service setup**

    Make sure whether the printer is registered to Canon Cloud Printing Center.

- **Issue registration code**

  In order to link the web service and printer, obtain the registration code from the service origin.

- **DNS server setup**

  Performs settings for a DNS server. Select **Auto setup** or **Manual setup**. If you select **Manual setup**, follow the display on the LCD to perform settings.

- **Proxy server setup**

  Performs settings for a proxy server. Follow the display on the LCD to perform settings.

Printer information

This item is displayed on the HOME screen.

- **System information**

  Displays printer's system information.

- **Error history**

  Displays the error history.

  For more on the error code, refer to List of Support Code for Error.

- **Usage**

  Displays the total number of sheets printed.

Setting Administrator Password on Operation Panel

The administrator password can be set or canceled.

Specifying the administrator password requires you to enter the password to use the items or change the settings below.

- **Web service setup**
- **Security settings**
- **LAN settings**
- **Other printer settings**
- **Language selection**
- **Firmware update**
- **Power control**
- **Quiet setting**
- **Auto maintenance settings**
- **Administrator password settings**
- **Reset settings** (excluding **Reset all**)

Follow the procedure below to specify the administrator password.

Important

- The administrator password of the printer is set from the time of purchase.

  To check the initial password, select  **Printer information** > **System information** on the printer's operation panel, and select **Show password** on the displayed screen. The **Default password** value is displayed on the **System information** screen.

  If the administrator password has been changed, the **Default password** value is not displayed.

  ➡ Default Administrator Password

1. Select  **Various settings** on the HOME screen.
2. Select **Printer settings**.
3. Select **Administrator password settings**.

   If you have set an administrator password, enter the password.
4. Select **Change administrator password**.
5. Select the effective range of the administrator password.

   Remote UI and other tools

   To change the setting using the remote UI or a certain software, the administrator password needs to be entered.

LCD, Remote UI, and other tools

To change the setting using the operation panel of this printer, remote UI or a certain software, the administrator password needs to be entered.

6. Enter new administrator password.

Important

- When changing the password, the character is limited as follows.
  - Single-byte alphanumeric characters, spaces, and the following symbols are available.

    - ! @ # $ % ^ & * _ ; : , . / ` = + ' " ( ) { } [ ] < > |
  - Set the password according to the password policy.

    Security settings

7. Select **Apply**.

8. Enter the administrator password again.

9. Select **Apply**.

The administrator password is available.

Changing Printer Settings from Your Computer (Windows)

- Changing the Print Options
- Reducing the Printer Noise
- Changing the Printer Operation Mode

Changing the Print Options

You can change the detailed printer driver settings for print data that is sent from an application software.

Check this check box if part of the image data is cut off, the paper source during printing differs from the driver settings, or printing fails.

1. Open the printer driver setup window
2. Click **Print Options...** on the **Page Setup** tab

   The **Print Options** dialog box opens.
3. Change the individual settings

   If necessary, change the setting of each item, and then click **OK**.

   The **Page Setup** tab is displayed again.

Reducing the Printer Noise

The quiet mode allows you to reduce the operating noise of this printer. Select when you wish to reduce the operating noise of the printer at night, etc.
Using this function may lower the print speed.

Quiet Settings

1. Open the **Maintenance** Tab

2. Click **Quiet Settings**

   The **Quiet Settings** dialog box opens.

   Note

   - If the printer is off or if communication between the printer and the computer is disabled, an error message may appear because the computer cannot collect the printer status.
     If this happens, click **OK** to display the most recent settings specified on your computer.

3. Set the quiet mode

   Enable quiet mode and configure quiet mode settings.

4. Apply the settings

   Check that the printer is on and then click **OK**.
   Click **OK** when the confirmation message appears.

   The settings are enabled hereafter.

Note

- The effects of the quiet mode may be less depending on the paper source and the print quality settings.

Changing the Printer Operation Mode

If necessary, switch between various modes of printer operation.

1. Open the **Maintenance** Tab

2. Check that the printer power is on, and click **Custom Settings**

   The **Custom Settings** dialog box opens.

   Note

   - If the printer is off or if communication between the printer and the computer is disabled, an error message may appear because the computer cannot collect the printer status.
     If this happens, click **OK** to display the most recent settings specified on your computer.

3. Configure settings

   If necessary, switch between various modes of printer operation.

4. Apply the settings

   Click **OK** and when the confirmation message appears, click **OK**.

   The printer operates with the modified settings hereafter.

Changing Printer's Setting Using Web Browser

- Start up Remote UI
- Changeable Setting Items Using Remote UI
- Setting Passwords Using Remote UI
- Registering Printer's Root Certificate to Web Browser for SSL Communication
- Registering Printer's Root Certificate to Local Computer for SSL Communication
- Generating Server Certificate

Start up Remote UI

You can check the printer status and change the printer settings using the web browser on your smartphone, tablet, or computer.

To check the printer status and to change the printer settings, display "Remote UI" on the web browser.

Note

- Remote UI is a software that enables you to perform operations, which are usually performed on the printer's operation panel, using a Web browser over a network.

  LAN connection with the printer is required to use Remote UI.
- You can use Remote UI on the following OS and the web browser.
  - iOS device

    Web browser: iOS standard Web browser (Mobile Safari)
  - iPadOS device

    Web browser: iPadOS standard Web browser (Mobile Safari)
  - Android device

    Web browser: Android standard Web browser (Browser or Chrome)
  - macOS device

    Web browser: macOS standard Web browser (Safari)
  - Windows device

    Web browser: Microsoft Edge, Mozilla Firefox, Google Chrome
- Enable JavaScript and cookies in the web browser.

1. Check printer's IP address.

   1. Select  **LAN settings** on the HOME screen.
   2. Select the enabled LAN.

      Diagonal lines are displayed for disabled LAN icons.
   3. Check **IPv4 address**.
2. Open web browser on your smartphone, tablet, or computer and enter IP address.

   Enter as following in the URL field of the web browser.

   http://XXX.XX.X.XXX

   Enter the IP address of the printer in "XXX.XX.X.XXX".

   Note

   - If you have set a DNS host name, you can also enter this.

When you access, "Remote UI" will be displayed on the web browser on your smartphone, tablet, or computer.

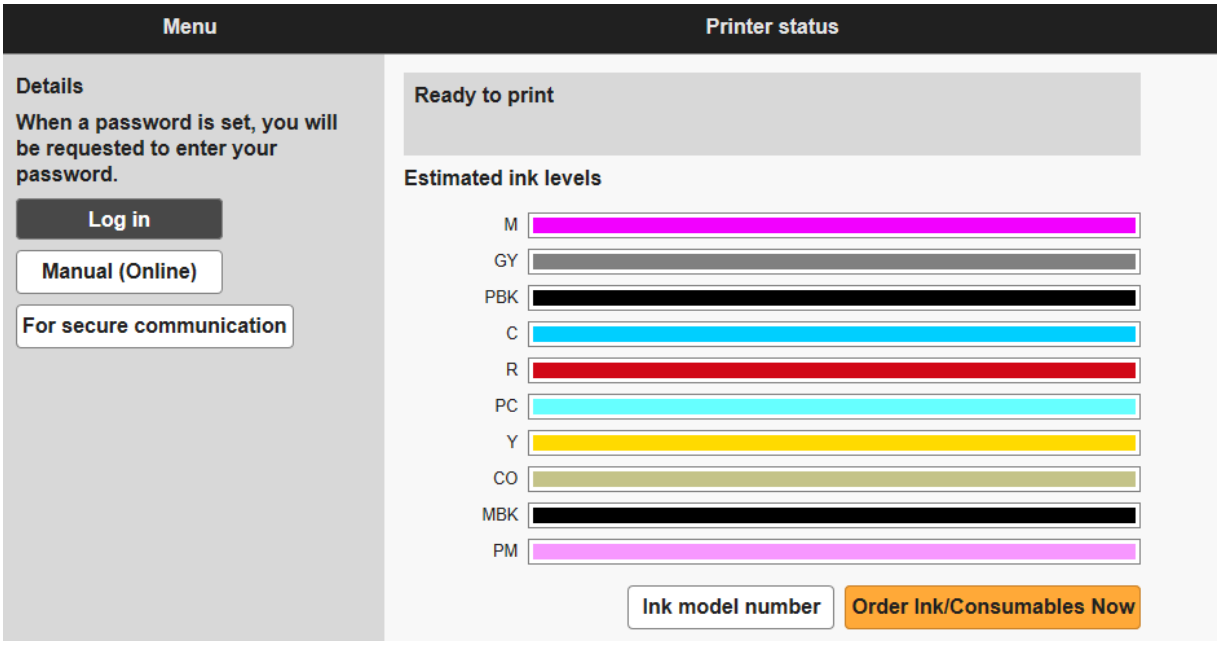

Note

- If you display Remote UI for the first time on your smartphone, tablet, or computer, download the root certificate, and then register it.

  ➡ Registering Printer's Root Certificate to Web Browser for SSL Communication

- If the root certificate is not registered, a message to warn you that the secure connection is not guaranteed may appear.

3. Select **Log in**.

The password authentication screen appears.

Note

- When the standard user mode is enabled, choose either administrator mode or standard user mode to log on.

  After choosing a mode and selecting **Log in**, the password authentication screen of each mode appears.

4. Enter password.

When the password authentication is complete, the menus that can be utilized are displayed on the web browser.

Important

- The administrator password of the printer is set from the time of purchase.

To check the initial password, select  **Printer information** > **System information** on the printer's operation panel, and select **Show password** on the displayed screen. The **Default password** value is displayed on the **System information** screen.

If the administrator password has been changed, the **Default password** value is not displayed.

➡ Default Administrator Password

For details on setting password, see Setting Passwords Using Remote UI.

5. Confirm that the main screen of Remote UI is displayed.

For changeable setting items, see below.

➡ Changeable Setting Items Using Remote UI

When you finish checking printer status and changing printer settings, select **Log out**.

Changeable Setting Items Using Remote UI

Note

- The item which can be used is different in administrator mode or in standard user mode.

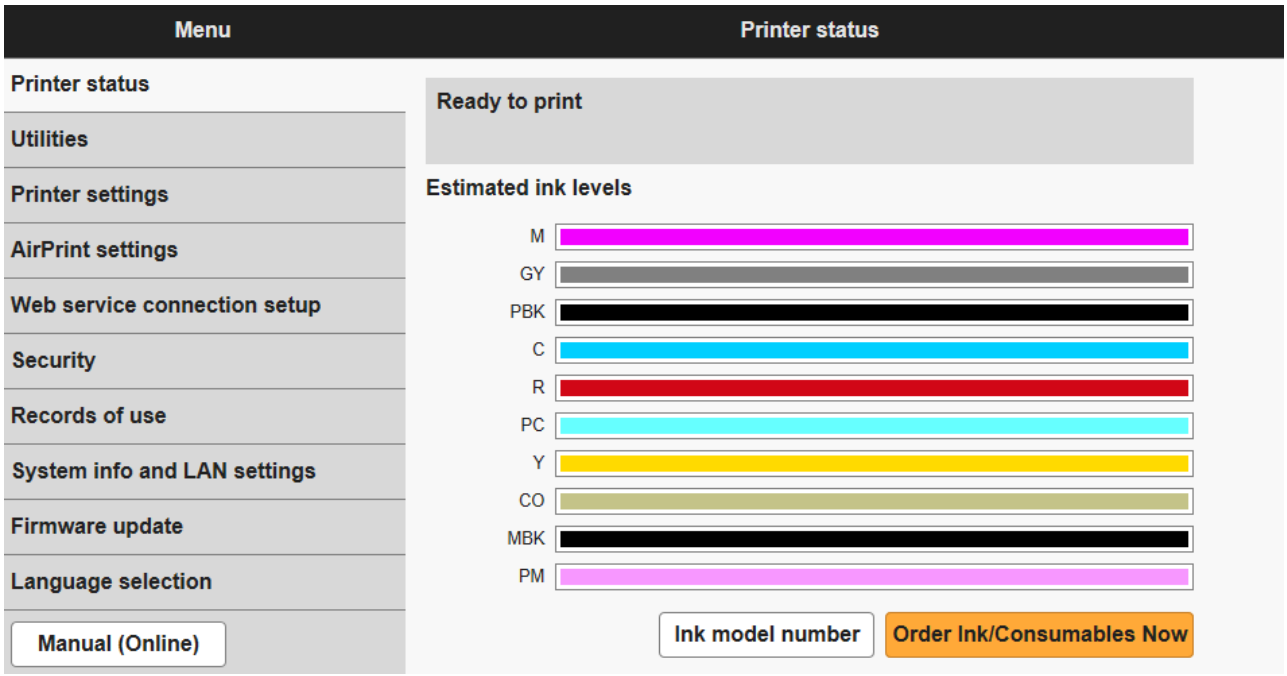

Printer status

This function displays printer information such as the remaining ink amount, the status, and detailed error information.

You can also connect to the ink purchase site or support page, and use Web Services.

Utilities

This function allows you to set and perform maintenance such as cleaning.

Printer settings

You can change various settings, such as print settings.

You can disable any operations using the operation panel from **Operation panel lock** on **Custom settings**.

Note

- Some of the menu is available only when you logged on in administrator mode.

AirPrint settings

This function allows you to specify the AirPrint settings when printing with AirPrint.

Web service connection setup

This function configures web services that use printer device information.

Job history

This function allows you to display the job history and print it.

Note

- When you are logging on in administrator mode, you can restrict this function in standard user mode.

Security

Set passwords, make settings related to certificates for encrypted communication, and other security settings.

Records of use

You can check the number of sheets printed on the device.

System info and LAN settings

- **Confirm system information**
- LAN settings
- **Error history**

Firmware update

You can update the firmware of the printer, check the firmware version, or perform settings of a DNS server and a proxy server.

➡ Firmware update

Language selection

This function allows you to change the language on the display.

Manual (Online)

This function displays the Online Manual.

Security

- **Recommended security settings**

  Enables to set the recommended security appropriate for your environment. Check the Security Settings Navigator for details on each setting.

  ➡ Set Up/Manage Security

- **Administrator password setting**

  ➡ Setting Passwords Using Remote UI

- **Standard user mode settings**

  Select Enable/Disable for the standard user mode.

- **TLS server settings**

  Make settings related to certificates for encrypted communication.

  Advanced TLS settings enables you to specify the range of TLS versions to be used, the algorithm to be used, and so on.

- **IEEE802.1X/EAP settings**

  - **Authentication**

    Select an authentication method for IEEE802.1X/EAP authentication.

    Note

    - In the case of using IEEE802.1X certificate, **Security** > **IEEE802.1X/EAP settings** > **CA certificate**, and register the CA certificate.
    - Supported authentication method
      - EAP-TLS(Extensible Authentication Protocol-Transport Level Security)
      - EAP-TTLS(EAP-Tunneled TLS)
      - PEAP(Protected EAP)

  - **Key and certificate settings**

    Perform settings for key and client certificate.

  - **CA certificate**

    Perform settings for the CA certificate that verifies a server certificate.

  - **Enable/disable IEEE802.1X/EAP**

    Enable or disable IEEE802.1X/EAP authentication.

- **IPsec settings**

  If enabled, you can set the IPsec security.

- **Import printer settings**

  Imports the printer security settings.

- **Export printer settings**

  Exports the printer security settings.

- **Security policy**

  Allows you to set the security policy and check the setting values.

  ➡ Set Up/Manage Security

- **Encryption settings**

  Performs settings related to encryption.

- **Password policy settings**

  Sets the minimum number of characters and combinations of characters that can be set for the printer passwords such as the administrator password.

- **Lockout settings**

  Performs settings for the function that locks operations that require entering the password if the incorrect password is entered a specified number of times on the password entry screen.

- **USB settings**

  Performs settings related to USB connection.

Note

- Refer to the Security Guide for details on **Security settings**.

  ➡ Set Up/Manage Security

LAN settings

- **Wi-Fi**

  Enables/Disables Wi-Fi.

- **Wireless Direct**

  Enables/Disables Wireless Direct.

- **Wired LAN**

  Enables/Disables Wired LAN.

- **Confirm LAN settings**

  The LAN setting information is displayed.

- **Advanced setup**

  - **Set printer name**

    Specifies the printer name.

    Note

    - You cannot use the same printer name as that already used for other LAN connected devices.
    - You cannot use a hyphen for the initial or last character of the printer name.

  - **TCP/IP settings**

    Performs IPv4 or IPv6 setting.

  - **WSD settings**

    Perform settings to use WSD.

  - **Bonjour settings**

    Perform settings to use Bonjour.

  - **LPD settings**

    Perform settings for printing with LPD.

  - **RAW settings**

    Enables/Disables the RAW printing.

  - **LLMNR settings**

    Enables/disables LLMNR (Link-Local Multicast Name Resolution). If you select **Enable**, you can determine the printer's IP address from the printer name even in an environment without the DNS server.

  - **SNMP settings**

    Perform settings for using SNMP to manage and control the printer.

  - **IPP Settings**

    Perform settings for printing with IPP.

◦ **CHMP settings**

Perform settings for communication at the time when printer drivers or applications acquire the information on status, paper, and job log, from the printer.

Selecting **Enable HTTPS redirection** redirects the communication using CHMP to encrypted communication.

Note

- To use CHMP for encrypted communication, you need to register the printer's root certificate to your computer.

  Registering Printer's Root Certificate to Local Computer for SSL Communication

- CHMP is a Canon proprietary protocol.

◦ **DRX settings**

When enabled, data is received intermittently during network connection.

◦ **IP filtering**

Allows or denies access for specific IP addresses.

Settings for both IPv4 and IPv6 addresses can be specified.

Important

- If the device address for the administrator has been set to rejection by mistake, select  **Various settings** on the HOME screen of the operation panel, and then select **Printer settings** > **Reset settings** > **LAN settings only** in this order, and initialize network information of the printer.

  After resetting, perform setup again as necessary.

◦ **MTU**

Performs the MTU settings.

◦ **Easy wireless connect settings**

When set to **Auto start: ON**, the device will automatically put into the standby mode for easy wireless connect.

To prevent the device from putting into the standby mode for easy wireless connect at unintended times, set to **Auto start: OFF**.

Setting Passwords Using Remote UI

Each of passwords for administrator and standard user can be set.

When logging on with password for administrator, all settings can be changed.

When logging on with password for standard user, some of the settings can be changed.

- Setting Administrator Password
- Setting Standard User Password

Note

- Password can be set only when you are logged in administrator mode.
- The standard user password is disabled by default.

Setting Administrator Password

Change the administrator password by following the steps below.

Important

- The administrator password of the printer is set from the time of purchase.

  To check the initial password, select  **Printer information** > **System information** on the printer's operation panel, and select **Show password** on the displayed screen. The **Default password** value is displayed on the **System information** screen.

  If the administrator password has been changed, the **Default password** value is not displayed.

  - Default Administrator Password

1. Start up **Remote UI**.

   - Start up Remote UI

2. Select **Security**.

3. Select **Administrator password setting**.

4. Select **Change administrator password**.

   If an administrator password is not specified, the confirmation message appears. Confirm the message and select **Yes**. When message appears again, confirm it and select **OK**.

5. Select range where administrator password is valid and select **OK**.

   Remote UI and other tools

   Entering the administrator password is required to change the setting items using the Remote UI or some software.

Operation panel/Remote UI/other tools

Entering the administrator password is required to change the setting items using the operation panel of the printer, the Remote UI, or some software.

6. Enter password and select **OK**.

Important

- The following character restrictions apply to the password:
  - The allowed characters are single-byte alphanumeric characters, blank space, umlaut characters, and the below characters.

    - ! @ # $ % ^ & * _ ; : , . / ` = + ' " ( ) { } [ ] < > |
  - Set the password according to the password policy.

    Security

7. When completion message appears, select **OK**.

Setting Standard User Password

For restricting the function for standard user, enable the standard user mode and set a standard user password by following the steps below.

1. Start up **Remote UI**.

   Start up Remote UI

2. Select **Security**.

3. Select **Standard user mode settings**.

4. Confirm the message and select **Yes**.

5. Enter password and select **OK**.

Important

- The following character restrictions apply to the password:
  - The allowed characters are single-byte alphanumeric characters, blank space, umlaut characters, and the below characters.

    - ! @ # $ % ^ & * _ ; : , . / ` = + ' " ( ) { } [ ] < > |
  - Set the password according to the password policy.

    Security

6. When completion message appears, select **OK**.

Registering Printer's Root Certificate to Web Browser for SSL Communication

If the printer's root certificate has not been registered to the web browser, a message to warn you that the secure connection is not guaranteed may appear.

When you display Remote UI for the first time on your smartphone, tablet, or computer, download the root certificate, and then register it to the web browser. The secure connection will be confirmed and a message will not appear. However, the message may appear depending on a web browser even after you have registered the root certificate.

How to register the root certificate varies depending on the web browser.

Operating procedure may differ depending on the version of your web browser. For other web browser, refer to each help.

Important

- Make sure that you have accessed to the printer IP address correctly by checking the URL field of the web browser before registering the root certificate.
- If the printer is connected via IPv6 using Windows, you need to generate a server certificate using Remote UI.

  For details, see Generating Server Certificate.

For Microsoft Edge

1. Select **For secure communication** on Remote UI.
2. Select **Download**.

   Downloading the root certificate is started.
3. If confirmation screen appears, select **Open**.

   Certificate screen is displayed.

   ### Note

   - To save the certificate file and register it, select **Save**. To register, select **Control Panel** > **Network and Internet** > **Internet Options**, and register the root certificate from **Certificates** on **Content** sheet.
4. Select **Install Certificate**.

   Certificate Import Wizard screen is displayed.
5. Select **Next**.
6. Select **Place all certificates in the following store**.
7. Select **Browse**.

Select Certificate Store screen is displayed.

8. Select **Trusted Root Certification Authorities** and **OK**.

9. Select **Next** on **Certificate Import Wizard** screen.

10. If **Completing the Certificate Import Wizard** appears, select **Finish**.

    Security Warning screen is displayed.

11. Make sure that thumbprint on **Security Warning** screen matches printer's thumbprint.

    To display the printer's root certificate thumbprint in **Root cert. thumbprint (SHA-1)** or **Root cert. thumbprint (SHA-256)**, select  **Printer information** on the HOME screen of the operation panel, and then select **System information**.

12. If thumbprint on **Security Warning** screen matches printer's thumbprint, select **Yes**.

13. Select **OK** on **Certificate Import Wizard** screen.

    The root certificate registration is completed.

For Safari

1. Select **For secure communication** on Remote UI.

2. Select **Download**.

    Downloading the root certificate is started.

3. Open the downloaded file.

    Keychain access starts up and **Add Certificates** screen is displayed.

4. Select **Add**.

    Information on the certificate is displayed.

    Note

    - You can also add the certificate by selecting **Show Certificate**, checking certificate name to add, and then selecting the same certificate on Keychain access.

5. Make sure that fingerprint of certificate detail information matches printer's thumbprint.

    To display the printer's root certificate thumbprint in **Root cert. thumbprint (SHA-1)** or **Root cert. thumbprint (SHA-256)**, select  **Printer information** on the HOME screen of the operation panel, and then select **System information**.

6. If fingerprint of certificate detail information matches printer's thumbprint, display information on certificate from the menu or by double-clicking the certificate, and select **Always Trust** on **Trust**.

   The root certificate registration is completed.

   Note

   - If a password is set on your device, entering a password may be required.

For Chrome on Android

1. Select **For secure communication** on Remote UI.

2. Select **Download**.

   Downloading the root certificate is started and then **Name the certificate** screen is displayed.

3. As entering the root certificate name is required, enter an arbitrary certificate name and select **OK**.

   The root certificate registration is completed.

   Note

   - If PIN or password is not set as security type, the attention screen may appear. Select **OK**, and then set the security type to PIN or password.

After Root Certificate Registration

We recommend that you make sure that the correct root certificate has been registered.

To make sure that the correct root certificate has been registered, make sure that thumbprint of certificate information matches printer's thumbprint. Follow the steps below.

Note

- Some Android devices cannot be checked the thumbprint of a registered route certificate.

1. From **Settings** menu on your device, select **Security**, **Trust credentials**, and **USER**.

   The list of downloaded certificates appears.

2. Select downloaded certificate.

   The certificate information appears.

3. Make sure that thumbprint of certificate information matches printer's thumbprint.

   To display the printer's root certificate thumbprint in **Root cert. thumbprint (SHA-1)** or **Root cert. thumbprint (SHA-256)**, select  **Printer information** on the HOME screen of the operation panel, and then select **System information**.

4. If thumbprint of certificate information screen matches printer's thumbprint, select **OK**.

   The root certificate registration is completed.

   If the message to warn you that the secure connection is not guaranteed appears when you select **Log in** on Remote UI after registering the root certificate, restart the web browser. The message will not appear on the web browser.

Note

- Depending on the Android device, a warning may appear even after registering the proper root certificate.

For Mobile Safari on iOS

1. Select **For secure communication** on Remote UI.
2. Select **Download**.

   Downloading the root certificate is started and then **Install Profile** screen is displayed.
3. Select **Install**.

   Warning screen is displayed.

   Note

   - If a password is set on your device, entering a password may be required.
4. Select **Install**.
5. Select **Install** on displayed dialog.

   The root certificate registration is completed.

Registering Printer's Root Certificate to Local Computer for SSL Communication

To use Device Management Console or Accounting Manager, etc. when you connect the printer to a computer using SSL encrypted communication, you need to register (import) the printer's root certificate to your computer.

Procedure to register the certificate varies depending on your operation environment.

Important

- If the printer is connected via IPv6 using Windows, you need to generate a server certificate using Remote UI.

  For details, see Generating Server Certificate.

Operation procedure may differ depending on your OS version.

For Windows 11/Windows 10/Windows 8.1

The procedure below describes how to import a root certificate in Windows 11/Windows 10/Windows 8.1.

1. Start up Remote UI.

   ➡ Start up Remote UI

2. Select **For secure communication**.

   Note

   - You can download a certificate from Status Monitor.

     1. Open status monitor.

        Open the **Printing preferences**, and select **Status Monitor...** on **Main**.

     2. Download a certificate.

        Select **Download Security Certificate** from the **Remote UI** menu.

3. Select **Download**.

   The root certificate will be downloaded.

4. When download confirmation screen is displayed, select **Open**.

   The **Certificate** screen appears.

5. Select **Install Certificate**.

   The **Certificate Import Wizard** screen appears.

6. Select **Local Machine**.

1. Select **Local Machine** on the startup screen of **Certificate Import Wizard**.

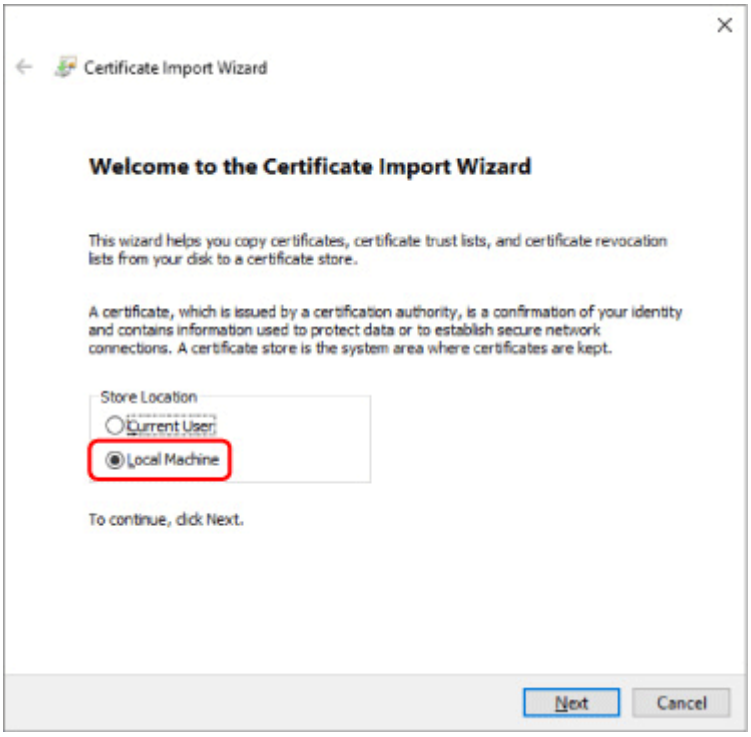

2. Select **Next**.

3. Select **Yes** on the displayed screen.

   The **Certificate Store** screen appears.

7. Select **Place all certificates in the following store**.

8. Select **Trusted Root Certificate Authorities**.

   1. Select **Browse** to open the **Select Certificate Store** screen.

   2. Select **Trusted Root Certificate Authorities** from the list and select **OK**.

   3. Select **Next** on the **Certificate Store** screen.

9. Select **Finish**.

   When the **Completing the Certificate Import Wizard** screen appears, check the settings and select **Finish**.

For Windows 7

The procedure below describes how to import a root certificate in Windows 7.

Important

- Be sure to create a certificate snap-in before importing a root certificate.

  The root certificate will be registered to the local user if you import it without creating a certificate snap-in.

Creating Certificate Snap-in

1. Start up Microsoft Management Console.

   Enter **MMC** on **Search programs and files** in the **Start** menu and press the Enter key.

2. Select **Yes** on displayed screen.

3. Select **Add/Remove Snap-in** from **File** menu.

   The **Add or Remove Snap-ins** screen appears.

4. Add **Certificate** snap-in.

   1. Select **Certificates** from **Available snap-ins** list and select **Add**.

   2. Select **Computer account** for **This snap-in will always manage certificates for** on the **Certificates snap-in** screen and select **Next**.

   3. Select **Local computer** on the **Select computer** screen and select **Finish**.

      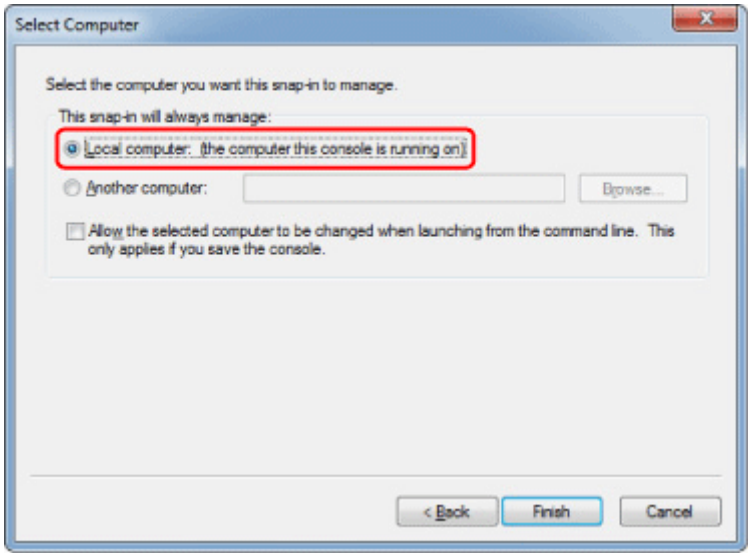

   4. Select **OK** on the **Add or Remove Snap-ins** screen.

Downloading Certificate

1. Start up Remote UI.

   ➡ Start up Remote UI

2. Select **For secure communication**.

   Note

   - You can download a certificate from Status Monitor.

     1. Open status monitor.

Open the **Printing preferences**, and select **Status Monitor...** on **Main**.

2. Download a certificate.

   Select **Download Security Certificate** from the **Remote UI** menu.

3. Select **Download**.

4. Select **Save**.

Importing Certificate

1. Open **Certificate Import Wizard**.

   1. On the left window, open **Trusted Root Certificate** from **Certificate** on **Console Root**.

   2. Right-click **Certificates** and select **Import** from **All tasks**.

2. Specify certificate file to import.

   1. Select **Next**.

   2. Specify the certificate file to import on **File name** and select **Next**.

3. Specify certificate store.

   1. Select **Place all certificates in the following store**.

   2. Select **Trusted Root Certificate Authorities** for **Certificates Store**.

4. Finish certificate import wizard.

   1. Select **Next** and check the specified settings.

   2. Select **Finish** to finish the wizard.

   3. Select **OK** on the displayed screen.

Checking Imported Certificate

Make sure the imported certificate has been registered to your computer.

1. Display certificate list.

   On the left window of Microsoft Management Console, select **Console Root** > **Certificates (Local Computer)** > **Trusted Root Certificate Authorities** in this order, and Select **Certificates** to display the certificate list.

2. Check registered certificate.

   Make sure the imported certificate name is displayed on the list.

   Note

   - Make sure you can see the registered certificate from **Current user** by creating the **Current user** snap-in.

Note

- When you finish Microsoft Management Console, a message asking you whether to save the console setting. If you continue to apply the same settings next, select **Yes** to save.

For macOS

The procedure below describes how to import a root certificate in macOS.

1. Start up Remote UI.

   Start up Remote UI

2. Select **For secure communication**.

3. Select **Download**.

   The root certificate will be downloaded.

4. Open downloaded certificate file.

   When the download procedure is completed, a downloaded item pops up on the right of the screen.

   Double-click the downloaded certificate on the list starts up **Keychain Access** and the **Add Certificates** screen appears.

   Note

   - If the downloaded item does not pop up, select the **Show Downloads** button on the right.
   - Selecting the magnifying glass icon on the right of download list displays the folder containing the certificate.

5. Select **Add**.

   Select the destination for the certificate on **Keychain**.

   Selecting **Add** displays information on the certificate.

   Note

   - You can add the certificate by selecting the same certificate on **Keychain Access**. Check the name of certification to add after selecting **View Certificates**.

6. Check certificate.

Make sure the fingerprint of certificate shown on **Details** corresponds with the root certificate thumbprint of the printer.

To display the printer's root certificate thumbprint in **Root cert. thumbprint (SHA-1)** or **Root cert. thumbprint (SHA-256)**, select  **Printer information** on the HOME screen of the operation panel, and then select **System information**.

7. Select **Always Trust**.

If the fingerprint of certificate detail information matches printer's thumbprint, display information on certificate from the menu or by double-clicking the certificate, and select **Always Trust** on **Trust**.

The root certificate has been registered.

Note

- Entering the password may be required if you specify it for your printer.

Generating Server Certificate

When you use SSL connection via IPv6 network, you need to generate an IPv6 server certificate using the printer.

Generate the server certificate from Remote UI.

Follow the procedure below.

1. Checking Printer's IP Address
2. Generating Server Certificate
3. Checking Generated Server Certificate

Important

- If you generate an IPv6 server certificate, a warning message may appear if you are using Remote UI.

  To reset the IPv6 server certificate, select **Security** > **TLS server settings** > **Delete key and certificate** in this order, and select **OK** on the displayed screen.

Checking Printer's IP Address

1. Select  **LAN settings** on the HOME screen.
2. Select the enabled LAN.

   Diagonal lines are displayed for disabled LAN icons.
3. Check the value on **IPv6 link-local address**.

   Write down the value on **IPv6 link-local address** for your reference when you generate a server certificate.

Generating Server Certificate

1. Start up Remote UI.

   ➡ Start up Remote UI
2. Select **Security**.
3. Select **TLS server settings**.
4. Select **Generate key and certificate**.
5. Select **Generate self-signed cert**.
6. Specify each setting item.

- **Key algorithm**

  Specify the signature algorithm and key information.

- Specify the expiration date.

  Enter the date you generated the server certificate on **Valid from**.

  Enter the date the server certificate expires on **Valid to**.

- Enter the common name.

  On **Common name**, enter the **IPv6 link-local address** you checked in abbreviated form.

  Note

  - When you enter the common name, add [ ] to each end of the abbreviation value of the printer's IPv6 address.
  - Do not use a comma or make a space for the common name.

7. Select **Next**.

   Enter **Country**, **State or province**, **Locality**, **Organization** and **Organizational unit** as required.

   Enter the same information in **Subject Alternative Names** as in **Common name**.

8. Select **Generate**.

   The server certificate starts to be generated.

   When the server certificate has been generated, **Generated a self-signed certificate.** appears.

9. Select **Restart LAN**.

   LAN will be restarted.

   When LAN has been restarted, **Printer status** on Remote UI appears.

   Note

   - If you cannot access to Remote UI after you restart LAN, reload your web browser.

Checking Generated Server Certificate

1. Select **Security** on Remote UI.

2. Select **TLS server settings**.

3. Select **Check key and certificate**.

   Make sure the issuer of the root certificate is displayed on **Issued by**, and the value you entered is displayed on **Common name** on **Subject**.

Network Setting

- **Printer Connection Methods**
  - Wi-Fi Connection
  - Wireless Direct Connection
  - Wired Connection
  - USB Connection
- **Default Network Settings**
- **Another Printer Found with Same Name**
- **Printing Network Settings**
- **Countermeasures against Unauthorized Access**
- **Network Status and Troubleshooting**
- **Checking Printer Connection Status Using Wi-Fi Connection Assistant**
- **Sharing the Printer on a Network (Windows)**
  - Setting Up a Shared Printer
  - Restrictions on Printer Sharing
- **Sharing the Printer on a Network (macOS)**
  - Settings on Print Server
  - Settings on Client PC
  - Restrictions on Printer Sharing

Printer Connection Methods

4 connection methods are available on the printer.

- **Wi-Fi Connection**



- **Wireless Direct Connection**



- **Wired Connection**

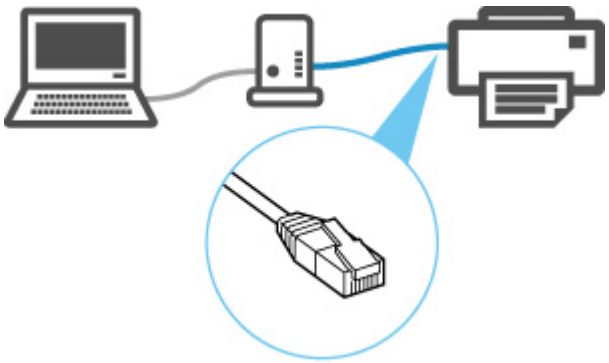

- **USB Connection**

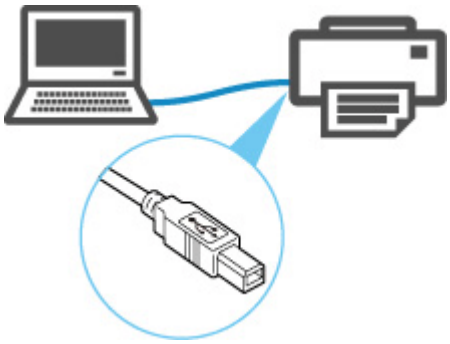

The printer cannot use a wired LAN connection simultaneously with a Wi-Fi or wireless direct connection.

When connecting another device while the devices are already connected to the printer, connect using a method other than the above.

➡ Restrictions

Important

- If you connect a device connected to the Internet via a wireless router to the printer that is in the wireless direct, the connection between the device and wireless router will be disabled. In that case, the connection of the device may switch to a mobile data connection automatically depending on your device. Transmission fees for connecting to the Internet using a mobile data connection apply.

Wi-Fi Connection

Important

- If printer is performing cleaning, print head alignment, or other processes, wait for the process to finish, before starting setup.

Note

- Refer to the following notes when connecting to Wi-Fi.

  ➡ Notes on Wi-Fi Connection

1. Press the **HOME** button to display the HOME screen.

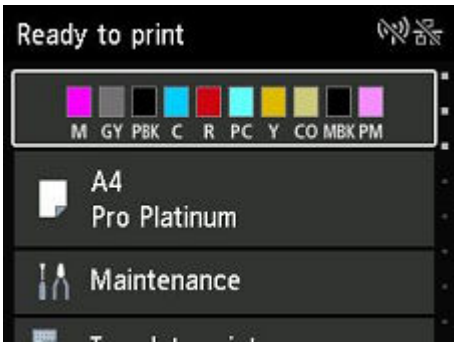

Note

- If an error screen is displayed, press the **OK** button, and then press the **HOME** button.

2. Select  **LAN settings** on the HOME screen.

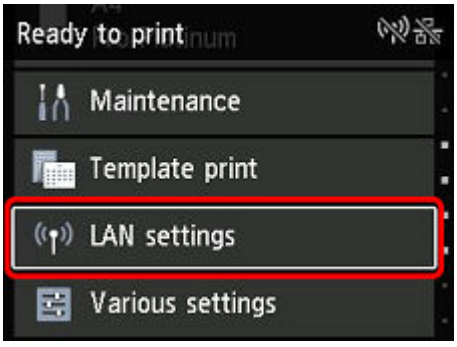

3. Select **Wi-Fi**.

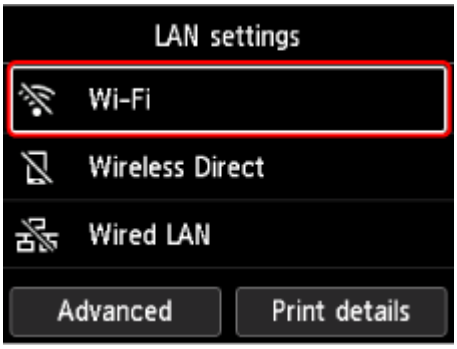

4. Select **Wi-Fi setup**.

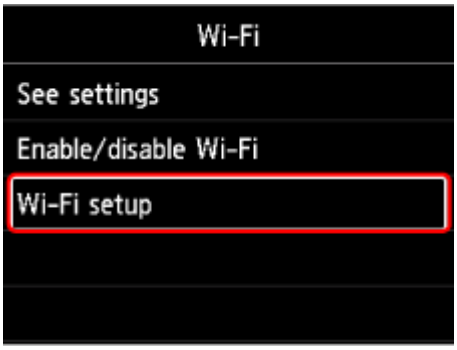

5. Select a connection method below.

Easy wireless connect

Set wireless router information to the printer directly from a device (such as a computer), without operating the wireless router

Easy wireless connect may take some time. Internet connection may become temporarily unavailable during setup.

Easy wireless connect is not available on Windows 10 in S mode or Windows 11 in S mode. Select other connection type.

Manual connect

Connect to wireless router using a password

WPS

Connect to a WPS-compatible wireless router

WPS (PIN Code) Connection

A wireless connection can also be set up by using the WPS PIN code method

WPS Connection

1. Select **WPS (Push button method)**.

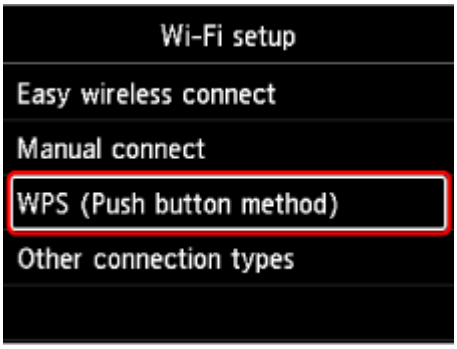

2. Press the **OK** button.



3. Press and hold the WPS button on the wireless router.

Note

- For more on pressing the WPS button, see the wireless router manual.

4. Press the **OK** button on the printer within 2 minutes.

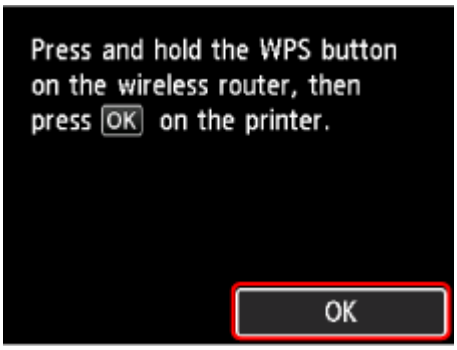

5. When the screen on the below appears, press the **OK** button.



6. Press the **HOME** button.

The network connection setup is now complete.

Once connection is complete,  appears on the screen.

If performing setup with software, return to the software and proceed with the installation.

If performing setup without using computer, smartphone, etc.

Download and install software.

➡ Go to the download site

After installing the software, start the software, and then follow the on-screen instructions to proceed with setup.

If performing setup using computer, smartphone, etc.

Windows



In the **taskbar**, click the application software you have been using for setup, and then follow the on-screen instructions to proceed with setup.

macOS



Click  in the **Dock**, and then follow the on-screen instructions to proceed with setup.

Smartphone/tablet/Chromebook

Return to the app you have been using for setup on the smartphone, and then follow the on-screen instructions to proceed with setup.

WPS (PIN Code) Connection

1. Select **Other connection types**.

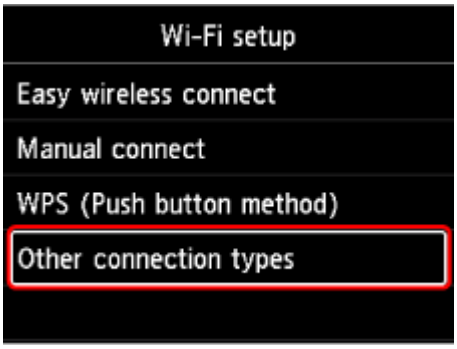

2. Select **WPS (PIN code method)**.

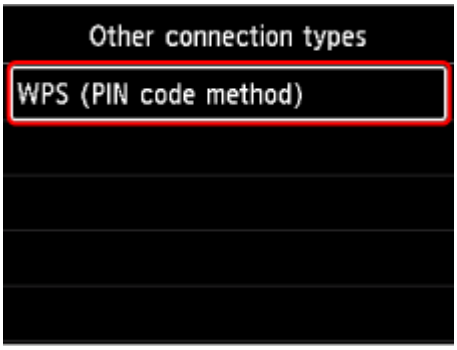

3. Follow the on-screen instructions on a computer to set a PIN code on the wireless router.

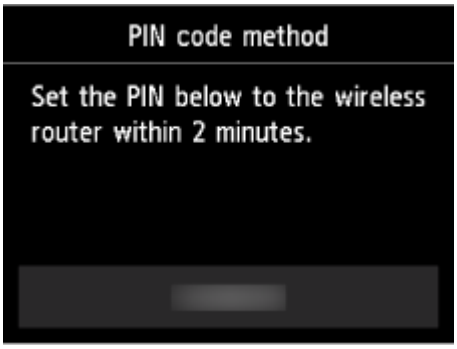

4. When the screen on the below appears, press the **OK** button.



5. Press the **HOME** button.

The network connection setup is now complete.

Once connection is complete,  appears on the screen.

If performing setup with software, return to the software and proceed with the installation.

If performing setup without using computer, smartphone, etc.

Download and install software.

➡ Go to the download site

After installing the software, start the software, and then follow the on-screen instructions to proceed with setup.

If performing setup using computer, smartphone, etc.

Windows



In the **taskbar**, click the application software you have been using for setup, and then follow the on-screen instructions to proceed with setup.

macOS



Click  in the **Dock**, and then follow the on-screen instructions to proceed with setup.

Smartphone/tablet/Chromebook

Return to the app you have been using for setup on the smartphone, and then follow the on-screen instructions to proceed with setup.

Manual connect

1. Select **Manual connect**.

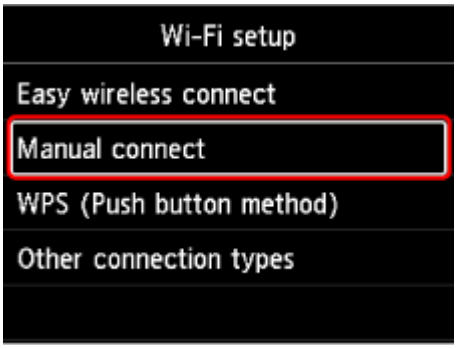

2. Select your wireless router.

   If you select a Wi-Fi router name, proceed to step 8 and continue with the settings.

   If you select "**Directly enter the wireless router name**", proceed to step 3 and continue with the settings.

   If "**Failed to connect to the wireless router.**" appears, see "Failed to connect to the wireless router." Appears.

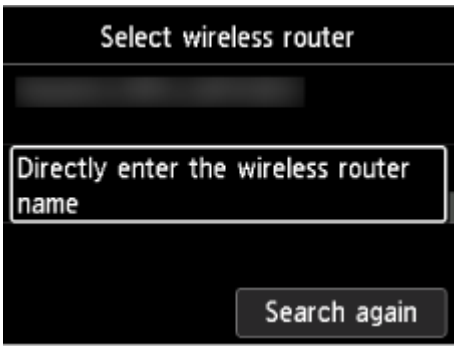

3. Press the **OK** button.

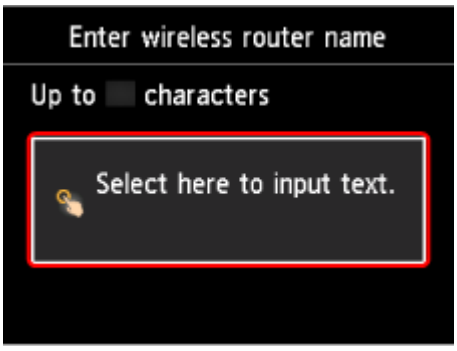

4. Enter the wireless router name (SSID). Text entry is case-sensitive.



If you don't know your wireless router name, see the wireless router manual or contact its manufacturer.

5. After entry, select **OK** on the keyboard.



6. Make sure the wireless router name (SSID) is correct.

7. Press the **OK** button.

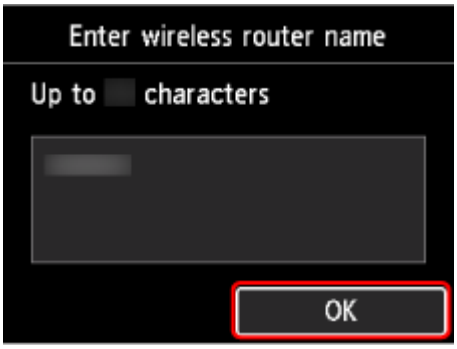

8. The screen below will appear.

If "**Connected to the wireless router.**" appears, the network does not require a password. Continue from step 13.



9. Press the **OK** button.

10. Enter the password. Text entry is case-sensitive.



If you don't know the password for your wireless router, see the wireless router manual or contact its manufacturer.

11. After entry, select **OK** on the keyboard.



12. Press the **OK** button.



13. When the screen on the below appears, press the **OK** button.



14. Press the **HOME** button.

The network connection setup is now complete.

Once connection is complete,  appears on the screen.

If performing setup with software, return to the software and proceed with the installation.

If performing setup without using computer, smartphone, etc.

Download and install software.

➡ Go to the download site

After installing the software, start the software, and then follow the on-screen instructions to proceed with setup.

If performing setup using computer, smartphone, etc.

Windows



In the **taskbar**, click the application software you have been using for setup, and then follow the on-screen instructions to proceed with setup.

macOS



Click  in the **Dock**, and then follow the on-screen instructions to proceed with setup.

Smartphone/tablet/Chromebook

Return to the app you have been using for setup on the smartphone, and then follow the on-screen instructions to proceed with setup.

Easy wireless connect

1. Select **Easy wireless connect**.

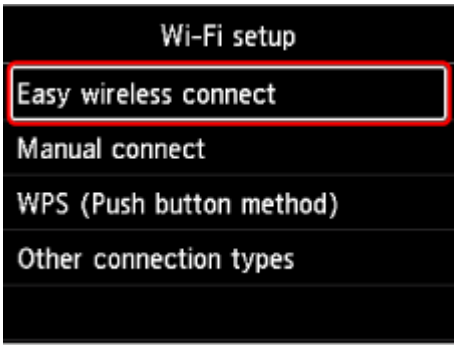

2. Select **Start**.



3. When the printer preparation is complete, the screen below appears.

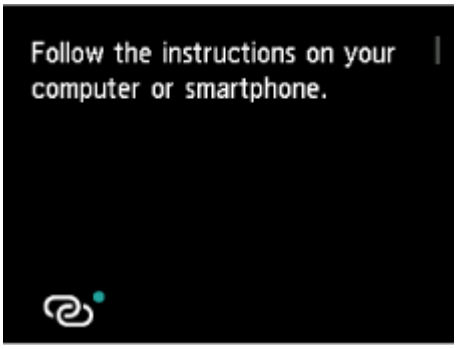

4. Return to the application software and proceed with the setup.

If performing setup without using computer, smartphone, etc.

Download and install software.

➡ Go to the download site

After installing the software, start the software, and then follow the on-screen instructions to proceed with setup.

If performing setup using computer, smartphone, etc.

Windows



In the **taskbar**, click the application software you have been using for setup, and then follow the on-screen instructions to proceed with setup.

macOS



Click  in the **Dock**, and then follow the on-screen instructions to proceed with setup.

Smartphone/tablet/Chromebook

Return to the app you have been using for setup on the smartphone, and then follow the on-screen instructions to proceed with setup.

Wireless Direct Connection

You can connect devices (e.g. computer, smartphone, or tablet) to the printer by two methods below.

- Wireless connection (connecting devices via a wireless router)
- Direct wireless connection (connecting devices directly without a wireless router)

This section describes Wireless Direct, which allows you to print by connecting the devices to the printer directly.

Important

- You can connect up to 5 devices to the printer at the same time with Wireless Direct.
- Check the usage restrictions and connect the printer to the Wireless Direct.

  ➡ Restrictions

Connecting a smartphone/tablet/computer to the printer



1. Enable Wi-Fi function on smartphone/tablet/computer.

   Enable Wi-Fi in the Settings menu on your smartphone/tablet/computer.

   For instructions on enabling the Wi-Fi function, refer to the instruction manual for your smartphone/tablet/computer.

2. Select  **LAN settings** on the HOME screen.

3. Select **Wireless Direct**.

4. Select **Connect to smartphone**.

5. Select **iPhone/iPad** to connect with an iPhone/iPad, **Android device** to connect with an Android device, and **Others** to connect with other device.

   - **iPhone/iPad**

     1. Select **QR Code**.
     2. Scan the displayed QR code with the iPhone/iPad standard camera app or smartphone/tablet app .

        The iPhone/iPad is connected to the printer.

Note

- If the QR code cannot be read, press the **Back** button in the screen displayed QR code and connect the printer from **Connect to smartphone** > **Others**.

- **Android device**

  1. Select **QR Code**.
  2. Scan the displayed QR code with the Android device in one of the following ways.
     - Select network and Wi-Fi on the setting of Android device. Select **QR code** icon to the right of the **Add network** at the bottom of the list of Wi-Fi connections and scan the QR code.
     - Scan the displayed QR code with the Android standard camera app or smartphone/tablet app .
     - Scan the displayed QR code with a QR code reading app.

     The Android device is connected to the printer.

     Note

     - Wireless Direct using QR code can be used with Android 5.0 or later.
     - It is available in Android 10 or later to scan QR code from setting and read QR code with the Android standard camera.
     - Depending on the smartphone/tablet, QR code may not be readable.
     - If the QR code cannot be read, press the **Back** button in the screen displayed QR code and connect the printer from **Connect to smartphone** > **Others**.

- **Others**

  1. Select **Next**.

     Network name (SSID) and **Password** are displayed.

     Note

     - To show the password, select **Show password**. To hide the password, select **Hide password**.
     - The password is required when connecting smartphone/tablet/computer to the printer.

  2. Select "DIRECT-XXXX- ModelName" ("X" represents alphanumeric characters) on your smartphone/tablet/computer.
  3. Enter **Password** on smartphone/tablet/computer.

     The smartphone/tablet/computer is connected to the printer.

     Note

     - If the printer is set to display a confirmation screen in **Connection request confirmation** of Changing Wireless Direct Setting, when the wireless direct compatible device connects to the printer, a confirmation screen asking for permission to connect is displayed on the printer operation panel.

Make sure the name on the operation panel is the same as that of your wireless communication device and select **Yes**.

You can print from your smartphone or tablet by installing the App. Download it from App Store and Google Play.

- For iOS device
- For Android device

Changing Wireless Direct Setting



Change the settings for the Wireless Direct following the procedure below.

1. Select  **LAN settings** on the HOME screen.
2. Select **Wireless Direct**.

   Note

   - To change the Wireless Direct settings, you need to enable Wireless Direct in advance.

     Select **Enable/disable Wireless Direct** on the menu screen displayed when selecting **Wireless Direct** and enable Wireless Direct.

3. Select a setting item.

   Scroll down if necessary.

   - **See settings**

     The setting values for using the printer with Wireless Direct are displayed.

   - **Change network name (SSID)**

     Change the identifier (SSID) for Wireless Direct.

     The identifier (SSID) is the printer's name (device name) displayed on a Wi-Fi Direct compatible device.

     Follow the procedure below to change the identifier (SSID).

     - To set manually
       1. Select the displayed identifier (SSID).
       2. Change using the keyboard that appears.
       3. When you have finished making changes, select **OK**.
     - To set automatically

1. Select **Auto update**.
2. Select **Yes**.

   You can check the updated setting.

Note

- To show the password, select **Show password**. To hide the password, select **Hide password**.

- **Change password**

  Change the password for Wireless Direct.

  - To set manually

    1. Select **Change manually**.
    2. Select the displayed password.
    3. Enter the new password.

       Change using the keyboard that appears.
    4. When you have finished making changes, select **OK**.

  - To set automatically

    1. Select **Auto update**.
    2. Select **Yes**.

       You can check the updated setting.

    Note

    - To show the password, select **Show password**. To hide the password, select **Hide password**.

- **Connection request confirmation**

  Change the confirmation screen setting when a Wi-Fi Direct compatible device is connecting to the printer.

  If you want the printer to display the screen to inform you a Wi-Fi Direct compatible device is connecting to the printer, select **ON**.

  Important

  - To prevent an unauthorized access, we recommend you should select the setting to display the confirmation screen.

- **2.4GHz/5GHz Switch**

  Change the frequency used for Wireless Direct.

  While using Wireless Direct (2.4 GHz), the connection of nearby Bluetooth speakers may be interrupted from time to time. In such a case, switching to 5 GHz will reduce the trouble.

Note

- If you change the Wireless Direct setting of the printer, also change the wireless router setting of the device.

Wired Connection

Important

- If printer is performing cleaning, print head alignment, or other processes, wait for the process to finish, before starting setup.

Note

- Refer to the following for notes when connecting to a wired LAN.

  ➡ Notes on Wired Connection

1. Press the **HOME** button to display the HOME screen.

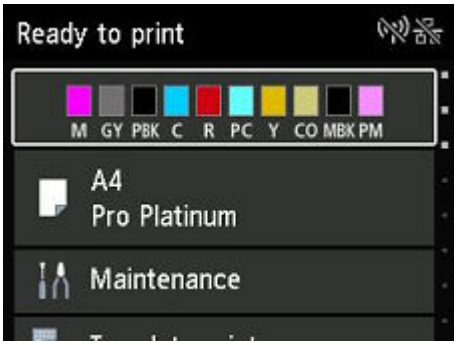

2. You will need an Ethernet cable (sold separately).

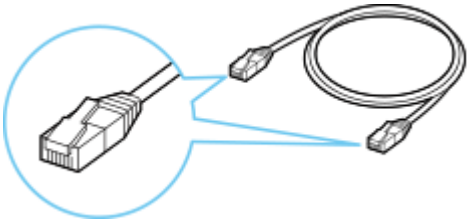

3. Remove the Cap (B) from the port located on the left side at the back of the printer.

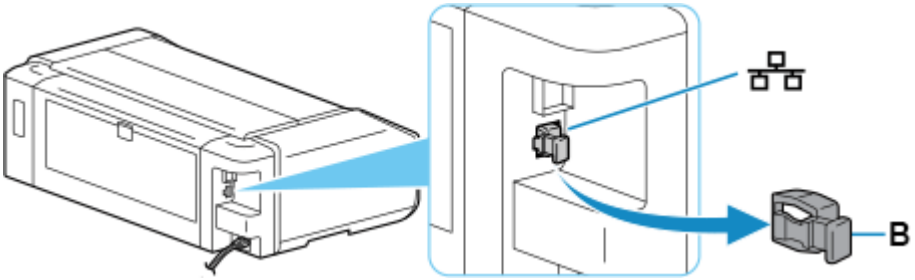

4. Connect the printer and a network device (router, etc.) with an Ethernet cable (C).

   Do not connect to any other port.

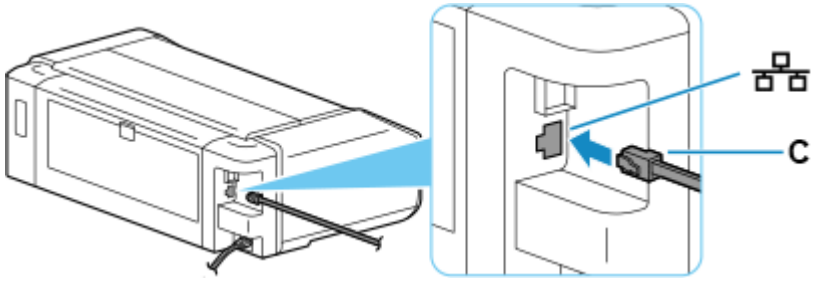

5. Select  **LAN settings** on the HOME screen.

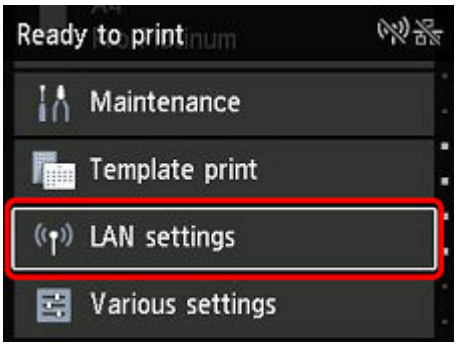

6. Select **Wired LAN**.

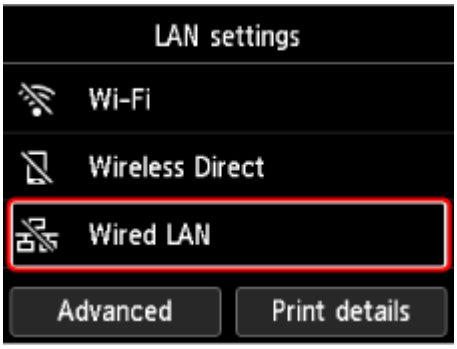

7. Select **Enable/disable Wired LAN**.

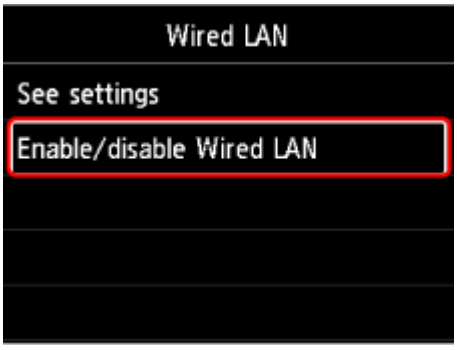

8. Select **Enable**.



9. Press the **HOME** button.

The network connection setup is now complete.

Once connection is complete,  appears on the screen.

If performing setup with software, return to the software and proceed with the installation.

If performing setup without using computer, smartphone, etc.

Download and install software.

➡ Go to the download site

After installing the software, start the software, and then follow the on-screen instructions to proceed with setup.

If performing setup using computer, smartphone, etc.

Windows



In the **taskbar**, click the application software you have been using for setup, and then follow the on-screen instructions to proceed with setup.

macOS



Click  in the **Dock**, and then follow the on-screen instructions to proceed with setup.

Smartphone/tablet/Chromebook

Return to the app you have been using for setup on the smartphone, and then follow the on-screen instructions to proceed with setup.

USB Connection

Connect the printer to a computer using a USB cable.

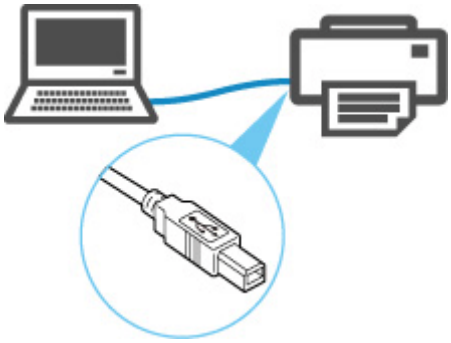

➡ What Is USB Cable?

In USB connection, the printer is connected one-on-one to the computer.

If your computer is connected to LAN, you can use the printer with other devices by enabling the sharing setting on your computer.

Note

- You can connect the printer to a computer via USB even when the printer is already connected to another one via wired LAN.

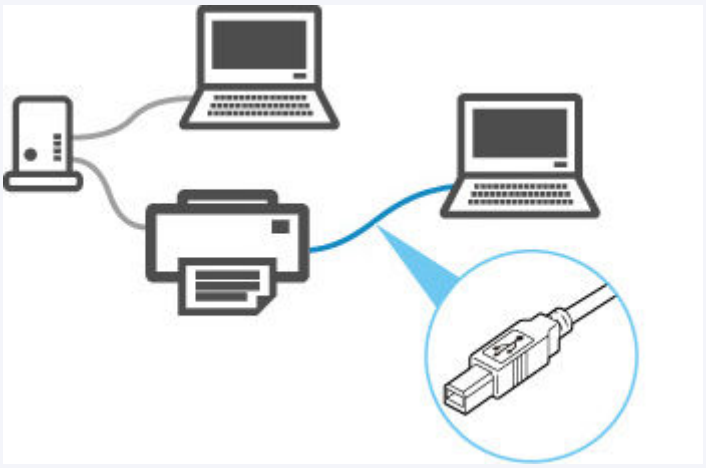

Default Network Settings

LAN Connection Defaults

Item	Default
Enable/disable Wired LAN	**Disable**
Network name (SSID)	BJNPSETUP
Wi-Fi security	**Disable**
IP address (IPv4)	**Auto setup**
IP address (IPv6)	**Auto setup**
Set printer name *	XXXXXXXXXXXX
Enable/disable IPv6	**Enable**
Enable/disable WSD	**Enable**
Timeout settings	**15 minutes**
Enable/disable Bonjour	**Enable**
Service name	Canon ModelName
LPD settings	**Enable**
RAW settings	**Enable**
LLMNR settings	**Enable**
Wi-Fi DRX settings	**Enable**
Wired LAN DRX settings	**Enable**

("XX" represents alphanumeric characters.)

* Default value depends on printer. To check value, use operation panel.

➡ LAN settings

Wireless Direct Defaults

Item	Default
Network name (SSID)	DIRECT-abXX-YY-NNNN *1
Password	ZZZZZZZZZZ *2
Wi-Fi security	**WPA2-PSK (AES)**
Connection request confirmation	Displayed

2.4GHz/5GHz Switch	**2.4GHz**

*1 "ab" is specified at random and "XX" represents last two digits of printer's wireless MAC address. "YY" is alphanumeric, and "NNNN" means your printer model.

*2 The password is specified automatically when the printer is turned on for the first time.

Another Printer Found with Same Name

When the printer is found during setup, other printers with the same name may appear on the results screen.

Select a printer with checking the printer settings against those on detection result screen.

Check the printer's MAC address or serial to select the correct printer from the results.

Note

- Serial number may not appear on result screen.

Check the printer's MAC address and serial number by selecting **Printer information** > **System information**.

Printer information

Printing Network Settings

Use the operation panel to print the printer's current network settings.

Important

- The network settings printout contains important information about your network. Handle it with care.

Items to Prepare

5 sheets of A4 or Letter-sized plain paper

1. Load paper.

   Loading Paper in the Top Feed

2. Select  **LAN settings** on the HOME screen.

3. Select **Print details**.

4. Select **Yes** on displayed screen.

5. Select **ON** or **OFF** on displayed screen.

   The printer starts printing network settings information.

Countermeasures against Unauthorized Access

This section describes countermeasures against an unauthorized access to the printer from outside. When you use the printer via a network or you are an administrator, we recommend you read this section before using the printer.

Four countermeasures below can be helpful against an unauthorized access.

- Specify a Private IP Address
- Restrict Communication Using Firewall or Wi-Fi Router
- Specify a Password for the Printer
- Apply higher security level for Wi-Fi connection

For some printers, operation logs are recorded on the printer itself.

- Downloading logs recorded on the printer

Note

- As the setting procedure described below is an example, it may be different from that of your printer. For details, refer to your printer's manual.

Specify a Private IP Address

An IP address is a numeric label assigned to each device on the network. There are two types of IP address. One is used for internet connection ("global IP address"), and the other is used for a local area network such as an inhouse LAN ("private IP address").

If a global IP address is specified for the printer, many and unspecified users on internet can access to the printer. As a result, you will face an increased risk of information leakage caused by an unauthorized access from outside. On the other hand, if a private IP address is specified for the printer, users who can access to the printer are confined to those on a local area network such as an inhouse LAN. Therefore, we recommend you specify a private IP address for the printer.

The range of addresses used as a private IP address is shown below. Make sure whether a private IP address is specified for your printer.

Range of private IP address

- 10.0.0.0 to 10.255.255.255
- 172.16.0.0 to 172.31.255.255
- 192.168.0.0 to 192.168.255.255

Procedure to check the IP address

Select **Setup** > **Device settings** > **LAN settings** on your printer to select a network connection method and check the IP address. For the procedure to check and specify the IP address, refer to your printer's manual.

Note

- Establishing an environment to protect an access from outside using a firewall can reduce a risk of an unauthorized access even though a global IP address is specified for your printer.

Restrict Communication Using Firewall or Wi-Fi Router

Firewall is a system which prevents an unauthorized access from an external network user to protect an inhouse network against attack or intrusion.

Firewall enables your network to be protected against an unauthorized access by restricting a communication from the specific external IP address which seems to have a risk.

A home use Wi-Fi router has a similar function. Be careful when you change the settings.

Specify a Password for the Printer

Even if a malicious third party accesses to your printer by any chance, you can reduce a risk of information leakage drastically by specifying a password to protect various information on your printer.

In addition, though the printer can be protected by specifying a password, it is important to manage the specified password for security. Manage your password referring to the four points below. For details, refer to your printer's manual.

- Be sure to change the default password.
- Change the password periodically.
- Do not use a password easy to guess for a third party.
- Do not tell a third party about the specified password casually.

Note

- A password is not specified for some printers at the time of purchase. In this case, specify the password for the printer.
- A password cannot be specified for some printers.

Password management using Remote UI (User Interface)

Remote UI is a software to access to the printer via a network by using a web browser. You can check the printer status or settings on Remote UI, which allows you to perform operations almost the same as those you can on the operation panel of the printer.

Entering the printer's IP address or host name on the web browser displays the portal page of Remote UI.

For the procedure to start up or operations of Remote UI, refer to your printer's manual.

Important

- Do not access to a website while you are using Remote UI on the web browser.

  In addition, be sure to close the web browser when you leave your seat before you finish performing settings, or when you have finished performing settings.

Apply higher security level for Wi-Fi connection

When you use the printer via Wi-Fi, we recommend you apply a security method with higher security level (e.g. WPA/WPA2).

For more on operations, refer to your printer's manual.

Downloading logs recorded on the printer

Note

- This function may not be available depending on your region or printer model.

For some printers, logs are recorded on the printer when the following operations are performed. The content of the logs varies depending on the printer being used.

- When authentication is performed using an administrator password
- When an administrator password is registered, changed, or deleted
- When time-related settings are changed
- When printer settings are imported/exported
- When all settings are reset (initialized)

You can download the logs in text file format by following the procedure below.

1. Open Remote UI.
2. Select **Printer settings**.
3. Select **Admin. Auth. Log Download**.
4. Select **Yes**.

Note

- To delete the logs, reset (initialize) all printer settings.

Note

- This web page contains information about several models. Depending on the specifications of the printer you are using, some of the features described (device functions, connection method, operating procedure and etc.) may not apply.

Network Status and Troubleshooting

Check the network status referring to LAN setting information on the LCD.

Printing Network Settings

Network Status	What to Do
Connected normally. If you are unable to print, see 1 on What to Do.	1. If you are unable to print, check the items below: • whether the computer is connected to Wi-Fi • whether the firewall of your security software is enabled • whether a privacy separator, SSID separator, or Network separation function is enabled on your wireless router If one of the above is enabled, disable it before setup. • whether the network name (SSID) of the printer matches that of the router to connect 2. To change the network connection method (wired/wireless), change it on the printer's network setting screen. **Note** • Turning off the band steering feature (determines the appropriate frequency band to connect to when the number of devices connected increases and the 2.4 GHz and 5 GHz frequency bands are congested) in your wireless router's settings may help. • If the same SSID is set for both 2.4 GHz and 5 GHz, changing them to different SSIDs may enable you to connect. • If you can't connect to the network, use a USB connection.
Wi-Fi is disabled on the printer.	Perform printer setup following the instructions of the manual.
Wired LAN connection is disabled.	• Make sure the printer is connected to the router with the LAN cable. If the LAN cable is loose, connect the cable properly. If the LAN cable is connected to the WAN side of the router, connect the cable to the LAN side of the router. • Make sure the network devices (e.g. hub or router) are turned on.
IP address is not assigned.	• If you specify the printer's IP address automatically, enable DHCP on the router. • If you specify the printer's IP address manually, the address is disabled because it is out of the valid range. You specified (0.0.0.0) as the IP address, for example. Specify the valid IP address.
The default gateway is not specified.	Check the items below to communicate by hopping routers (e.g. using a cloud application). • Make sure the device specified as the default gateway is turned on. • Specify the default gateway address correctly.
Cannot connect to the specified network.	Check the status of the printer, network devices (e.g. wireless router), or smartphone/tablet. • If they are turned off, turn them on. • Make sure wireless signal is strong. Monitor signal status and move the printer and wireless router as necessary.

	• The security key specified for the wireless router may not match that you entered. The security key is case-sensitive. Enter the correct security key.
Make sure wireless signal is strong.	• Make sure the printer is not placed too far away from the wireless router. • Monitor signal status and move the printer and wireless router as necessary.
The number of connected clients reaches the upper limit.	• Wireless Direct does not allow more than 5 devices to be connected. If you add a device to connect, disconnect a device you do not use before adding the device.
The signal to noise ratio (S/N ratio) is low.	• There is a lot of noise from other devices. Move the printer apart from other devices.
A link local address is assigned.	• Perform printer setup again. • The security key specified for the wireless router may not match that you entered. The security key is case-sensitive. Enter the correct security key.
The specified network name (SSID) is left default value.	The network name (SSID) is not specified. Enter the network name (SSID) specified for the destination.

Sharing the Printer on a Network (Windows)

When computers are used in a network environment, documents can be printed from multiple computers that share a single printer.

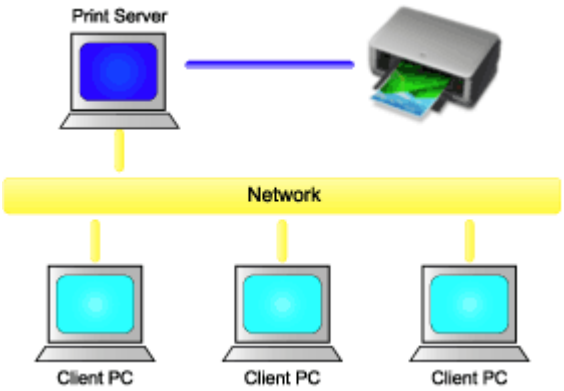

- Setting Up a Shared Printer

  This section describes how to set up the print server and the client.

Note

- The Windows versions of the computers connected to the network do not necessarily have to be the same.

Related Topic

➡ Restrictions on Printer Sharing

Setting Up a Shared Printer

On the print server, set up sharing of the printer driver. Then from the client, set up the connection to the print server.

1. Install the printer driver on the print server system

2. Display the **Devices and Printers** window

   Select the **Control Panel** -> **Hardware and Sound** (**Hardware**) -> **Devices and Printers**.
   The **Devices and Printers** window is displayed.

3. Click the icon for the model name of printer to be shared

   Press the Alt key, and from the displayed **File** menu, select **Printer properties** -> **Sharing** tab.

   Important

   - When starting up the software and performing install or uninstall, a confirmation or warning dialog box may appear.
     This dialog box appears when administrative rights are required to perform a task.
     When you are logged on to an administrator account, click **Yes** (or **Continue**, **Allow**) to continue.
     Some applications require an administrator account to continue. In such cases, switch to an administrator account, and restart the operation from the beginning.

4. Set sharing

   On the **Sharing** tab, check (or select) **Share this printer**, set the shared name as necessary, and then click **OK**.

5. If the print server and the client have different architectures (32 bit or 64 bit), install an additional driver

   1. Display the **Devices and Printers**, **Printers**, or **Printers and Faxes** window.
   2. Select the printer icon, click **Print server properties**, and select the **Drivers** tab.
   3. Click **Add...**.
   4. When the **Add Printer Driver Wizard** window is displayed, click **Next**.
   5. If the print server has a 32-bit architecture, select **x64**. If the print server has a 64-bit architecture, select **x86**. Then click **Next**.
   6. Click **Have Disk...**.
   7. In the **Install From Disk** window, open the "Driver" folder of the downloaded printer driver, specify the "inf" file, and click **OK**.

Note

- If the printer server is 32-bit, specify it as "xxxxxxx3.INF". If it is 64-bit, specify it as "xxxxxxx6.INF".

8. Select the printer to be used, and click **Next**.

Note

- If an error message is displayed, select the other printer.

9. Click **Finish**

The setup on the print server system is complete. Next, set up the client systems.

6. On the client, open Explorer, and double-click the icon of the printer to be shared

7. Follow the window instructions, and install the printer driver

The setup on the client system is complete.
Even when you perform the setup on a different client, follow the same steps 6 and 7.

Restrictions on Printer Sharing

These are restrictions that apply when you are using a printer in a network environment. Check the restrictions for the environment you are using.

Restriction on setting up printer sharing

- If "ntprint.inf" is requested when you install the driver from **Add Printer**, specify the file as follows:
  1. Start Explorer on the print server and on the client with the different architecture, paste the following path in the address bar, and press Enter on the keyboard:
     %windir%\system32\driverstore\
  2. Right-click the **FileRepository** folder, and click **Properties**.
  3. On the **Sharing** tab, click **Share**.
  4. In the message window displayed on the print server, specify "ntprint.inf_xxxxxxxx" in the folder that was shared in step 3, and click **OK**.
     If there are multiples copies, select the file with the latest update date and time.

Restrictions on sharing and using a printer

- A print completion message may be displayed. To disable the message display, follow the procedure below.
  1. In the **Control Panel** -> **Hardware and Sound** (**Hardware**) -> **Devices and Printers** window of the client system, select the printer, and click **Print server properties** on the command bar.
  2. Uncheck **Show informational notifications for network printers** on the **Advanced** tab, and then restart the computer.
- The bi-directional communication function is disabled and the correct printer status may not be recognized.
  If a client user opens the printer driver properties and then clicks **OK** with the **Enable bidirectional support** check box cleared on the **Ports** tab, the bidirectional communication function of the print server may also be disabled.
  In this case, check **Enable bidirectional support** check box on both the print server system and the client system.
- When you print from a client system, you cannot use Canon IJ Preview.
- When the functions on the **Maintenance** tab cannot be set properly from a client system, they may be grayed out. In this case, change the settings from the print server.
  When you change the settings of the print server, you should delete the icon of the shared printer from the client system, and then specify the shared settings again in the client system.
- If the same driver installed on the print server is also installed on the client, the network printer icon may be created automatically.
- If an error occurs when you print a document on a shared printer from a client, the error message of the Canon IJ status monitor is displayed on both the client and the print server. If a document is printed out normally, the Canon IJ status monitor is displayed only on the client.

Maintenance

- **Adjustments for Better Print Quality**
  - Maintenance Procedure
  - Checking for Nozzle Clogging
  - Cleaning the Print Head
  - Deep Print Head Cleaning
  - Adjustment to Straighten Lines and Align Colors
- **Replacing Consumables**
  - Replacing Ink Tanks
  - Checking Ink Level
- **Cleaning the Printer**
  - Cleaning the Printer Exterior
  - Cleaning Paper Feed Rollers
  - Performing Bottom Plate Cleaning
- **Performing Maintenance Functions from Your Computer (Windows)**
  - Maintenance Tab Description
  - Cleaning the Print Heads
  - Printing a Nozzle Check Pattern
- **Performing Maintenance Functions from Your Computer (macOS)**
  - Opening Remote UI for Maintenance
  - Cleaning the Print Heads
  - Checking Ink Status from Your Computer
  - Printing a Nozzle Check Pattern
- **Other Maintenance**
  - Transporting Your Printer
  - Firmware update

Adjustments for Better Print Quality

- **Maintenance Procedure**
- **Checking for Nozzle Clogging**
- **Cleaning the Print Head**
- **Deep Print Head Cleaning**
- **Adjustment to Straighten Lines and Align Colors**
  - Automatic Adjustment to Straighten Lines and Align Colors
  - Manual Adjustment to Straighten Lines and Align Colors

Maintenance Procedure

If print results are blurred, colors are not printed correctly, or print results are unsatisfactory (e.g. misaligned printed ruled lines), perform the maintenance procedure below.

Important

- Do not rinse or wipe the print head and ink tank. This can cause trouble with the print head and ink tank.

Note

- Check the ink status on the HOME screen or other screens.

  If the ink is running low, take appropriate action.

  ➡ Checking Ink Level

- Increasing the print quality in the printer driver settings may improve the print result.

  ➡ Set Media Type, Quality, etc. (Media/Quality Tab) (Windows)
  ➡ Changing the Print Quality and Correcting Image Data (macOS)

When the Print Results Are Blurred or Uneven:

Step1 Print the nozzle check pattern.

From the printer

➡ Checking for Nozzle Clogging

From the computer

➡ Printing a Nozzle Check Pattern (Windows)
➡ Printing a Nozzle Check Pattern (macOS)

Step2 Examine the nozzle check pattern.

If there are missing lines or horizontal white streaks in the pattern:

Step3 Clean the print head.

From the printer

➡ Cleaning the Print Head

From the computer

➡ Cleaning the Print Heads (Windows)
➡ Cleaning the Print Heads (macOS)

After cleaning the print head, print and examine the nozzle check pattern: ➡ Step1

If the problem is not resolved after performing from step 1 to step 3 twice:



Step4 Clean the print head deeply.

From the printer

- Deep Print Head Cleaning

From the computer

- Cleaning the Print Heads (Windows)
- Cleaning the Print Heads (macOS)

Note

- When you have performed the procedure until step 4 and the problem has not been resolved, turn off the power and clean the print head deeply again after 24 hours.

  If the problem is still not resolved, the print head may be damaged. Contact your nearest Canon service center to request a repair.

When the Print Results Are Not Even such as the Ruled Lines Are Misaligned:

Step Align the print head.

- Automatic Adjustment to Straighten Lines and Align Colors

Checking for Nozzle Clogging

If the print is blurred or has different color threading, print a nozzle check pattern to see if each nozzle of the print head is not clogged.

Note

- You can also check for nozzle clogging from your computer.
  - Printing a Nozzle Check Pattern (Windows)
  - Printing a Nozzle Check Pattern (macOS)
- By default, nozzles are checked at fixed intervals.
  - Auto maintenance settings

Items to Prepare

A sheet of A4 or Letter-sized plain paper

1. Load a single sheet of A4 or Letter size plain paper in the top feed.

   Loading Paper in the Top Feed

   After loading paper, the paper information registration screen for the top feed is displayed.

   Select **A4** or **Letter** for **Page size** and **Plain paper** for **Type**, select **Register**.

   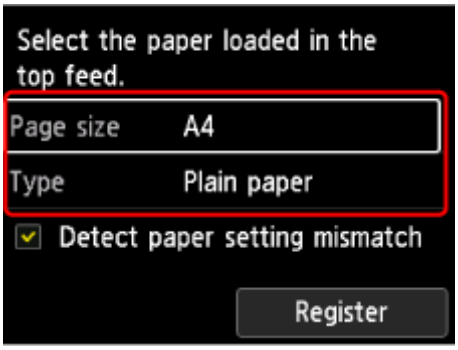

   If a message is displayed on the screen, follow the directions in the message to complete registration.

   ### Important

   - The manual feed tray is not available for the nozzle check pattern print procedure. Be sure to load paper in the top feed.

2. Open the paper output tray gently.

   Open the output tray extension gently, then pull out the paper output support.

3. Select  **Maintenance** on the HOME screen.

4. Select **Nozzle Check**.

   The confirmation screen will appear.

5. Select **Yes**.

   The nozzle check pattern will be printed and two pattern confirmation screens will appear on the LCD.

6. Check the print result.

   Check if there are missing lines in the pattern C or horizontal streaks in the pattern D.

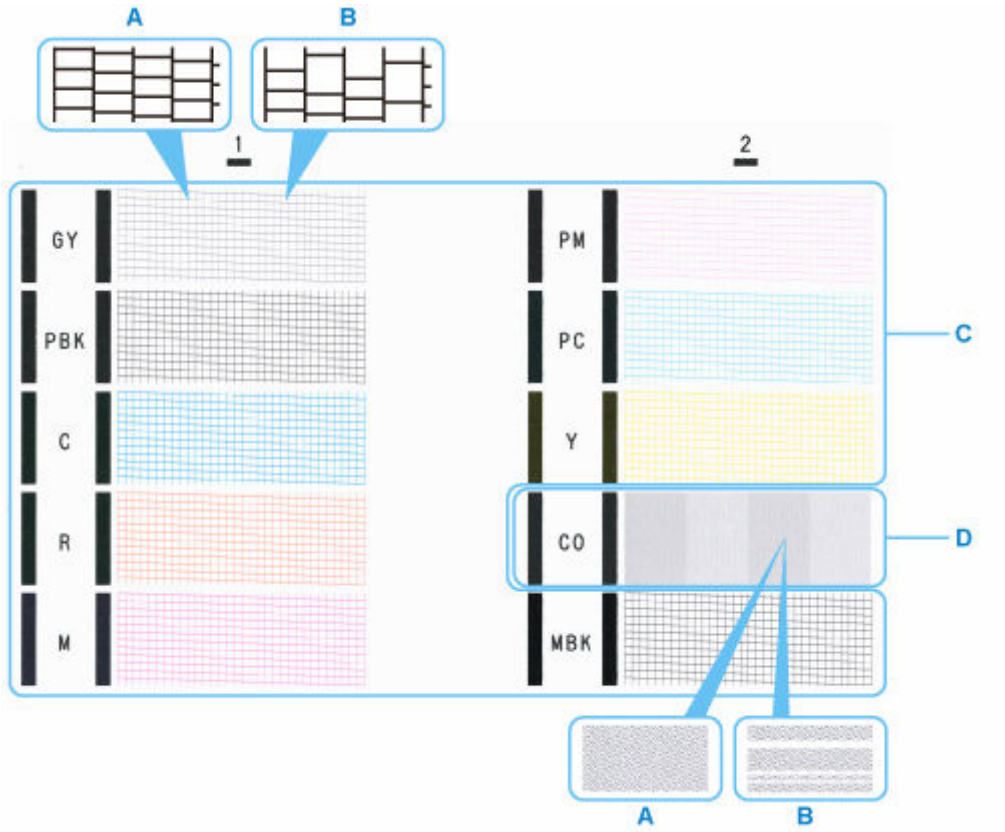

   A: No missing lines/No horizontal streaks
   B: Lines are missing/Horizontal streaks are present

Note

- Because CO ink is colorless, its pattern is printed over the black pattern. Check for horizontal streaks (E) in the dark gray bands of the pattern.

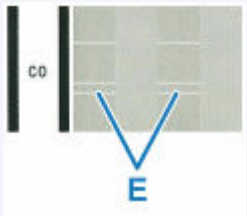

7. Select the pattern that is closer to the printed nozzle check pattern on the confirmation screen.

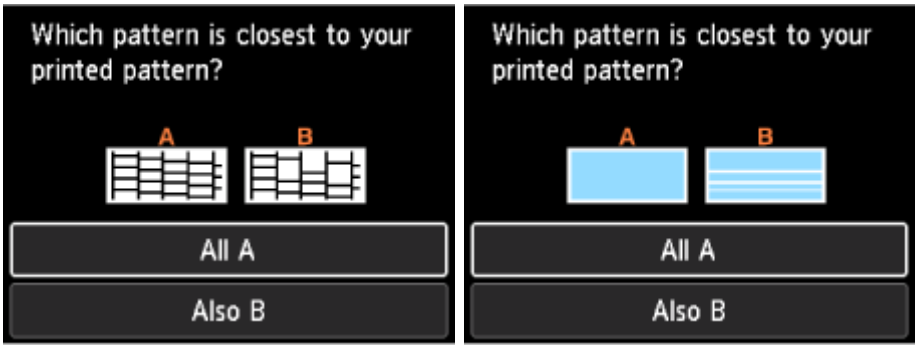

For A (no missing lines or no horizontal streaks) in both the pattern C and pattern D:

Cleaning is not required. Select **All A**, then press the **OK** button.

Confirm the message, then press the **OK** button.

The screen will return to the **Maintenance** screen.

For B (lines are missing or horizontal streaks are present) in the pattern C or pattern D, or in both patterns:

The cleaning is required. Select **Also B**, then go to next step.

If the pattern D or any color in the pattern C is not printed:



(Example: Magenta pattern is not printed)

The cleaning is required. Select **Also B**, then go to next step.

8. Select **Yes** on the cleaning confirmation screen.

9. Select ink group to be cleaned.

   - **All colors**
   - **Pattern 1**: GY / PBK / C / R / M
   - **Pattern 2**: PM / PC / Y / CO / MBK

   The printer starts cleaning the print head.

   Important

   - Do not perform any other operations until the printer completes the cleaning of the print head.

10. Check message and select **Yes**.

    A nozzle check pattern is printed and two pattern confirmation screens appear on the LCD.

11. Repeat steps 6 through 10.

Important

- If there is no improvement after repeating the cleaning process twice, perform **Deep Cleaning**.

➡ Deep Print Head Cleaning

Cleaning the Print Head

Clean the print head if lines are missing or if horizontal streaks are present in the printed nozzle check pattern. Cleaning unclogs the nozzles and restores the print head condition. Cleaning the print head consumes ink, so clean the print head only when necessary.

Note

- You can also clean the print head using the computer.
  - Cleaning the Print Heads (Windows)
  - Cleaning the Print Heads (macOS)

Items to Prepare

A sheet of A4 or Letter-sized plain paper

1. Load a single sheet of A4 or Letter size plain paper in the top feed.

   Loading Paper in the Top Feed

   After loading the paper, the paper information registration screen for the top feed is displayed.

   Select **A4** or **Letter** for **Page size** and **Plain paper** for **Type**, select **Register**, then press the **OK** button.

   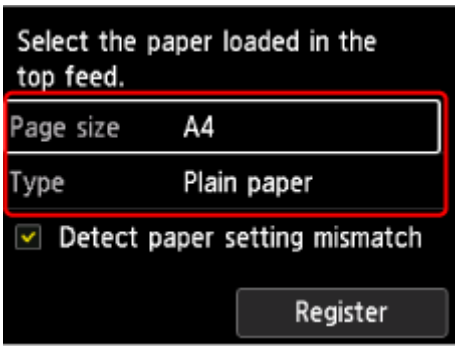

   If a message is displayed on the screen, follow the directions in the message to complete registration.

   ### Important

   - The manual feed tray is not available for the nozzle check pattern print procedure. Be sure to load paper in the top feed.

2. Open the paper output tray gently.

   Open the output tray extension gently, then pull out the paper output support.

3. Select  **Maintenance** on the HOME screen.

4. Select **Cleaning**.

   The confirmation screen will appear.

5. Select **Yes** on the cleaning confirmation screen.

6. Select ink group to be cleaned.

   - **All colors**
   - **Pattern 1**: GY / PBK / C / R / M
   - **Pattern 2**: PM / PC / Y / CO / MBK

   The printer starts cleaning the print head.

Important

- Do not perform any other operations until the printer completes the cleaning of the print head.

7. Check message and select **Yes**.

   The nozzle check pattern will be printed.

8. Check the print result.

   Check if there are missing lines in the pattern C or horizontal streaks in the pattern D.

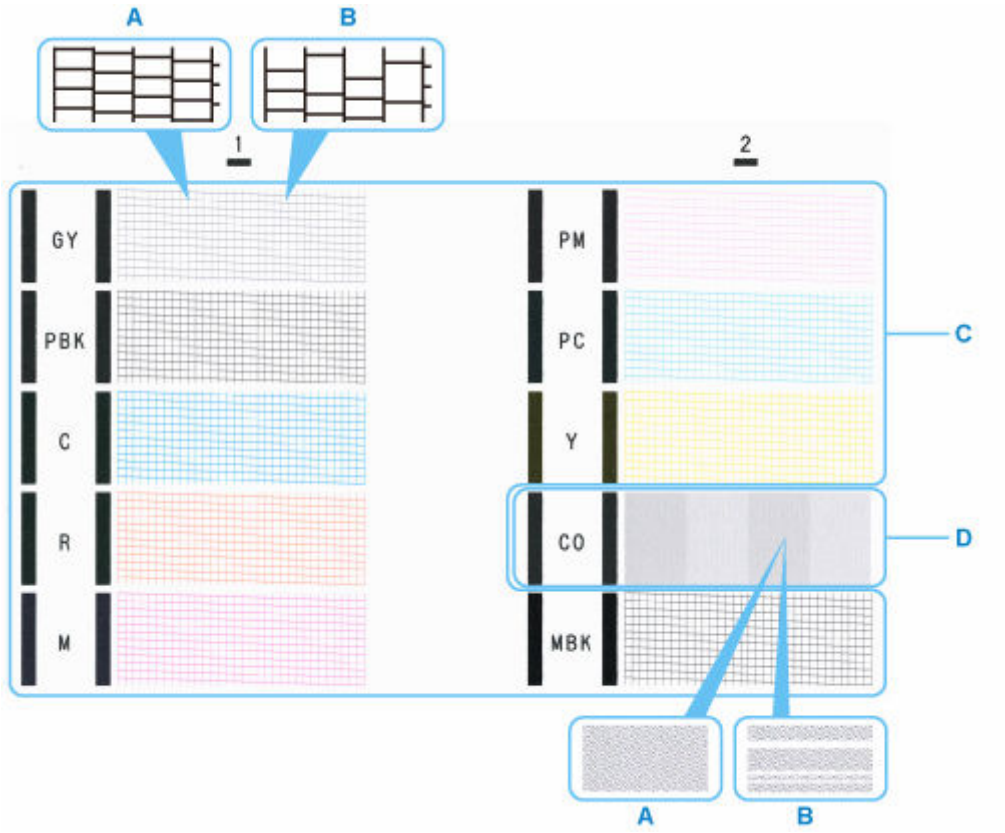

A: No missing lines/No horizontal streaks
B: Lines are missing/Horizontal streaks are present

Note

- Because CO ink is colorless, its pattern is printed over the black pattern. Check for horizontal streaks (E) in the dark gray bands of the pattern.

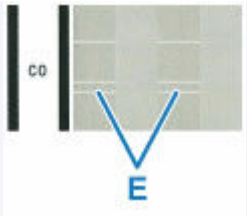

9. Select the pattern that is closer to the printed nozzle check pattern on the confirmation screen.

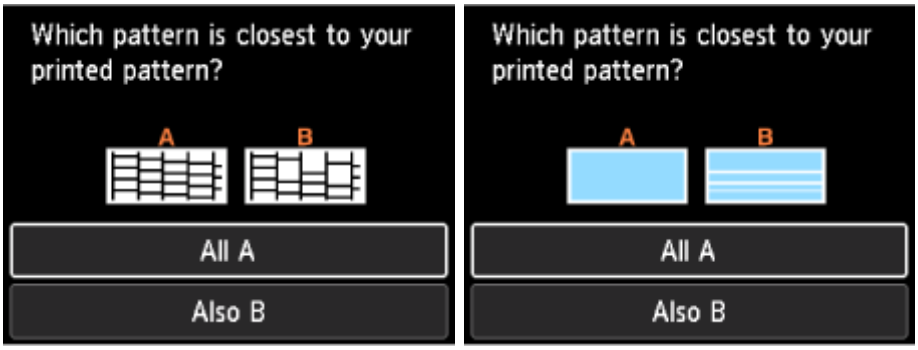

For A (no missing lines or no horizontal streaks) in both the pattern C and pattern D:

Cleaning is not required. Select **All A**, then press the **OK** button.

Confirm the message, then press the **OK** button.

The screen will return to the **Maintenance** screen.

For B (lines are missing or horizontal streaks are present) in the pattern C or pattern D, or in both patterns:

The cleaning is required. Select **Also B**, then go to next step.

If the pattern D or any color in the pattern C is not printed:



(Example: Magenta pattern is not printed)

The cleaning is required. Select **Also B**, then go to next step.

10. Select **Yes** on the cleaning confirmation screen.

11. Select ink group to be cleaned.

The printer starts cleaning the print head.

Important

- Do not perform any other operations until the printer completes the cleaning of the print head.

12. Check message and select **Yes**.

A nozzle check pattern is printed and two pattern confirmation screens appear on the LCD.

Important

- If there is no improvement after repeating the cleaning process twice, perform **Deep Cleaning**.

  ➡ Deep Print Head Cleaning

Deep Print Head Cleaning

If print quality does not improve by the standard cleaning of the print head, clean the print head deeply. Cleaning the print head deeply consumes more ink than the standard cleaning of the print head, so clean the print head deeply only when necessary.

Note

- You can also clean the print head deeply using the computer.
  - Cleaning the Print Heads (Windows)
  - Cleaning the Print Heads (macOS)

Items to Prepare

A sheet of A4 or Letter-sized plain paper

1. Load a single sheet of A4 or Letter size plain paper in the top feed.

   Loading Paper in the Top Feed

   After loading the paper, the paper information registration screen for the top feed is displayed.

   Select **A4** or **Letter** for **Page size** and **Plain paper** for **Type**, select **Register**, then press the **OK** button.

   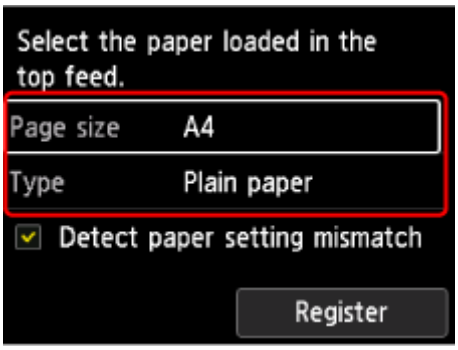

   If a message is displayed on the screen, follow the directions in the message to complete registration.

   ### Important

   - The manual feed tray is not available for the nozzle check pattern print procedure. Be sure to load paper in the top feed.

2. Open the paper output tray gently.

   Open the output tray extension gently, then pull out the paper output support.

3. Select  **Maintenance** on the HOME screen.

4. Select **Deep Cleaning**.

   The confirmation screen will appear.

5. Select **Yes** on the cleaning confirmation screen.

6. Select ink group to be cleaned.

   - **All colors**
   - **Pattern 1**: GY / PBK / C / R / M
   - **Pattern 2**: PM / PC / Y / CO / MBK

   The printer starts cleaning the print head.

   Important

   - Do not perform any other operations until the printer completes the cleaning of the print head.

7. Check message and select **Yes**.

   The nozzle check pattern will be printed.

8. When the completion message appears, select **OK**.

9. Check the print result.

   Check if there are missing lines in the pattern C or horizontal streaks in the pattern D.

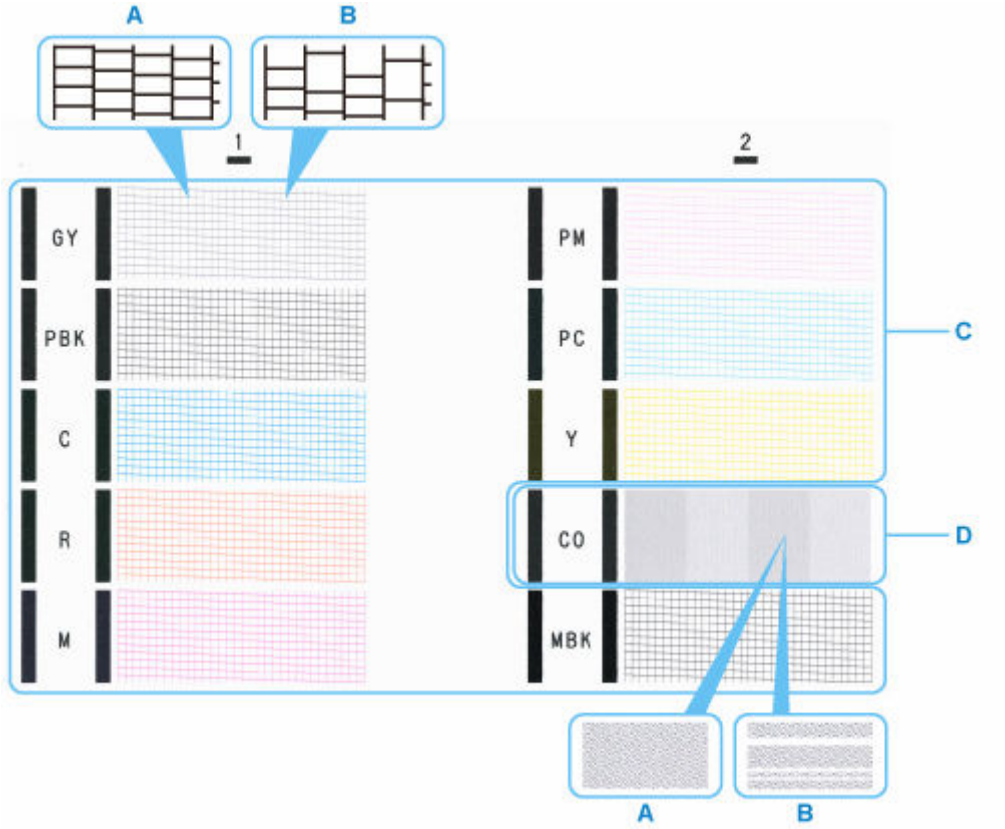

   A: No missing lines/No horizontal streaks
   B: Lines are missing/Horizontal streaks are present

   Note

   - Because CO ink is colorless, its pattern is printed over the black pattern. Check for horizontal streaks (E) in the dark gray bands of the pattern.

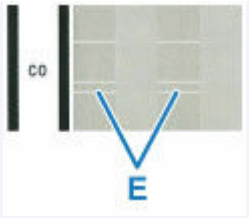

Important

- If a particular color is not printed properly, replace the ink tank of that color.

  ➡ Replacing Ink Tanks

- If the problem is not resolved, turn off the power and clean the print head deeply again after 24 hours. Do not unplug the power cord when turning off the power.
- If the problem is still not resolved, the print head may be damaged. Contact your nearest Canon service center to request a repair.

Adjustment to Straighten Lines and Align Colors

- Automatic Adjustment to Straighten Lines and Align Colors
- Manual Adjustment to Straighten Lines and Align Colors

Automatic Adjustment to Straighten Lines and Align Colors

If printed vertical lines are warped or colors are out of alignment, execute **Print Head Alignment** and adjust the print head position.

Choose from **Auto** or **Manual** for adjusting the print head.

Minor warping and misaligned colors can usually be improved by executing **Auto**. If there is no improvement, perform **Manual**.

➡ Manual Adjustment to Straighten Lines and Align Colors

When you execute **Auto**, the adjustment pattern is printed, and the print head position is adjusted based on the printing result automatically.



Important

- Because the results of adjustment vary depending on the type of paper used for adjustment, use the same type of paper as you will use for printing.
- This function is not available for paper with high transparency.

Items to Prepare

For A4 or Letter size paper: 2 sheets

1. Select  **Maintenance** on the HOME screen.
2. Select **Print Head Alignment**.
3. Select **Auto**.

   The confirmation screen will appear.
4. Select **Yes**.

   The paper settings screen will appear.
5. Sets the paper to use.
6. Load the prepared paper in the paper source specified in the message.

   ➡ Loading Paper in the Top Feed
   ➡ Loading Paper in the Manual Feed Tray

   If the paper source is the manual feed tray, load one sheet of paper at a time.
7. Open the paper output tray gently.

Open the output tray extension, then pull out the paper output support.

8. Press the **OK** button.

   The print head alignment sheet will be printed and the print head position will be adjusted automatically.

9. When the completion message appears, press the **OK** button.

Note

- If the print results are still not satisfactory after adjusting the print head position as described above, align the print head manually.

  ➡ Manual Adjustment to Straighten Lines and Align Colors

Manual Adjustment to Straighten Lines and Align Colors

If printed vertical lines are warped or colors are out of alignment, execute **Print Head Alignment** and adjust the print head position.

Normally, execute **Auto**.

➡ Automatic Adjustment to Straighten Lines and Align Colors

However, when printing on special paper or if printing is not improved after **Auto**, try **Manual**.

Manual adjustment requires you to examine the printed test pattern and enter an adjustment value.



Important

- Because the results of adjustment vary depending on the type of paper used for adjustment, use the same type of paper as you will use for printing.

Items to Prepare

For A4 or Letter size paper: 1 sheet

1. Select  **Maintenance** on the HOME screen.
2. Select **Print Head Alignment**.
3. Select **Manual**.

   The confirmation screen will appear.
4. Select **Yes**.

   The paper settings screen will appear.
5. Sets the paper to use.
6. Load the prepared paper in the paper source specified in the message.

   ➡ Loading Paper in the Top Feed
   ➡ Loading Paper in the Manual Feed Tray

   If the paper source is the manual feed tray, load one sheet of paper at a time.
7. Open the paper output tray gently.

   Open the output tray extension, then pull out the paper output support.
8. Press the **OK** button.

The print head alignment pattern is printed.

9. When the message "**Did the patterns print correctly?**" appears, confirm that the pattern is printed correctly, select **Yes**.

10. Confirm the message, then press the **OK** button.

    The input screen for the head position adjustment values will appear.

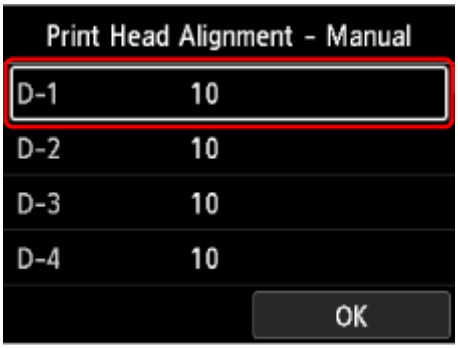

11. Look at the pattern and select the number of the pattern in each column that has straight lines.

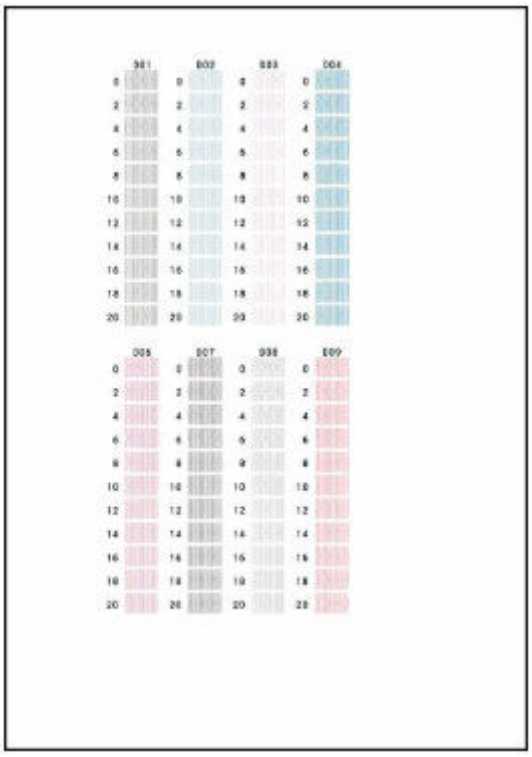

Note

- Look at the pattern and pick the setting that produces the least warped vertical straight lines.

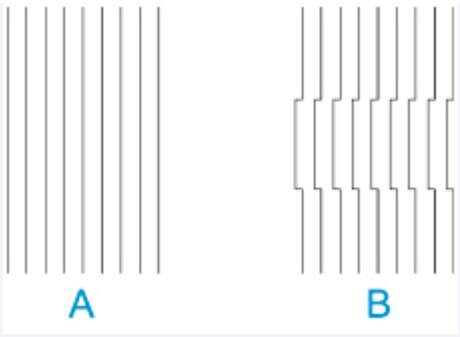

A: Vertical straight lines

B: Warped vertical straight lines

12. Repeat this procedure until you finish inputting a pattern number in all columns, select **OK**.

If a message is displayed on the screen, follow the directions in the message.

13. When the completion message appears, press the **OK** button.

Replacing Consumables

- Replacing Ink Tanks
- Checking Ink Level

Replacing Ink Tanks

When remaining ink cautions or errors occur, the message will appear on the LCD to inform you of the error. In this state, the printer cannot print. Take appropriate action according to the message.

Important

- Prepare a new ink tank before you start replacing one.
- Replace the ink tank quickly so as not to leave the printer without an ink tank. The printer may be damaged if it is left without an ink tank, causing a problem such as clogging due to dried ink.

Note

- If print results become faint or white streaks appear despite sufficient ink levels, see Maintenance Procedure.
- For precautionary notes on handling ink tanks, see Notes on ink tanks.

Replacing Procedure

When you need to replace an ink tank, follow the procedure below.

1. Open the top cover (A).

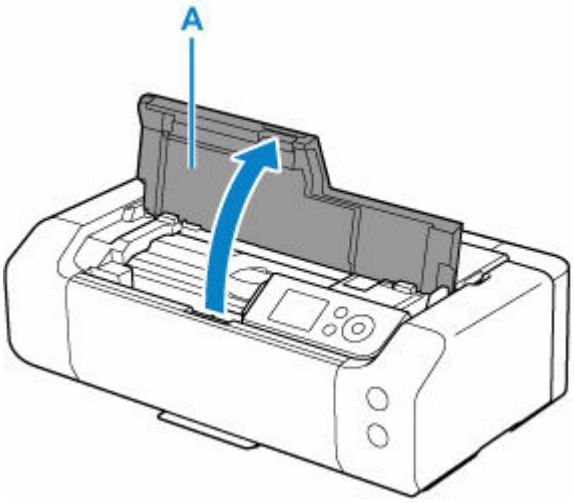

2. When message appears on LCD, press **Stop** button.

3. Select **OK**.

   The print head holder moves to the replacement position.

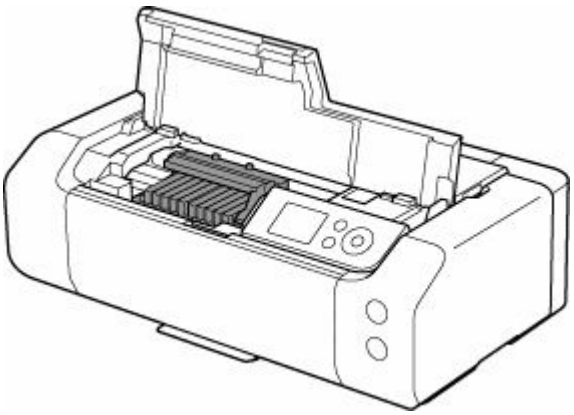

⚠ Caution

- Do not hold the print head holder to stop or move it forcibly. Do not touch the print head holder until it stops completely.

Important

- Do not touch the metallic parts or other parts inside the printer.
- If the top cover is left open for more than 10 minutes, the print head holder moves to the right. In this case, close and reopen the top cover.

4. Take a new ink tank out of its package.

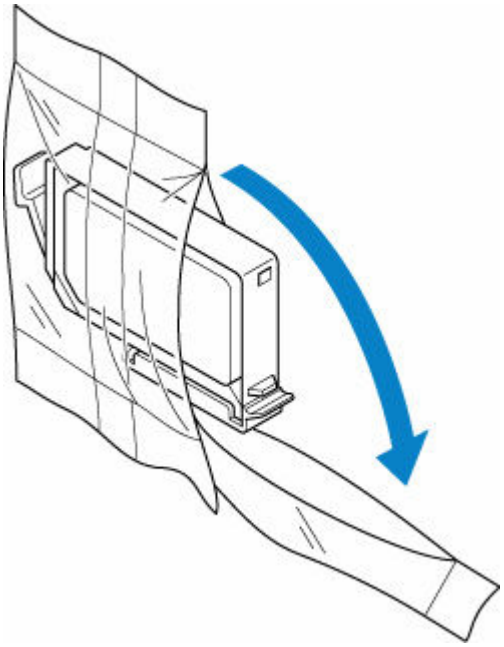

Important

- Handle an ink tank carefully. Do not drop or apply excessive pressure to it.

5. Remove the orange protective cap (B) from the bottom of the ink tank.

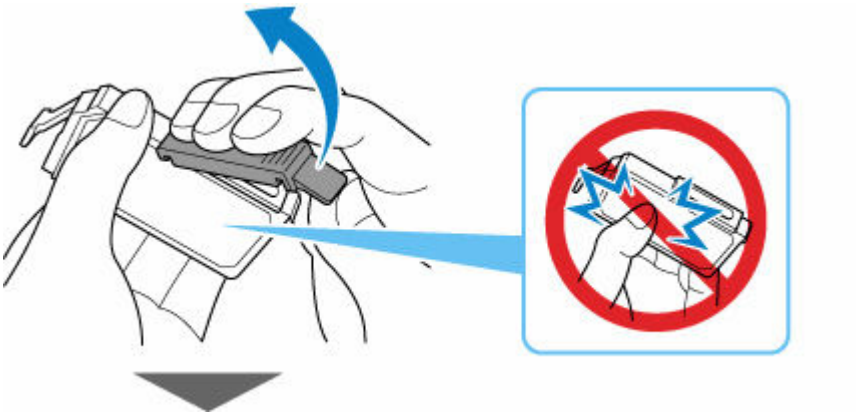

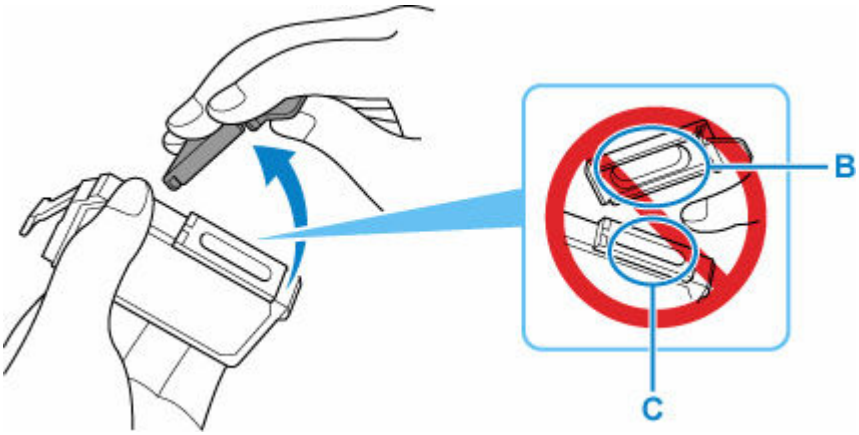

Important

- Do not push the sides of the ink tank. If you push the sides of the ink tank, ink may splash.
- Do not touch the inside of the protective cap (B) or the open ink port (C). The ink may stain your hands if you touch them.
- Do not reattach the protective cap (B) once you have removed it. Discard it according to the local laws and regulations regarding disposal of consumables.

6. Remove the ink tank where the ink runs out.

Push the tab (D) and lift the ink tank to remove.

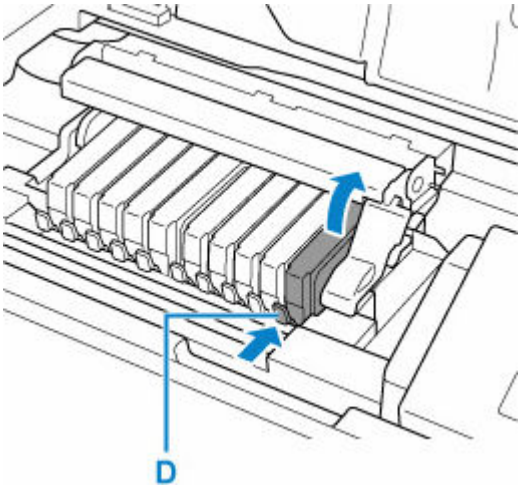

Important

- Do not touch other parts besides the ink tanks.
- Handle the ink tank carefully to avoid staining of clothing or the surrounding area.
- Discard the empty ink tank according to the local laws and regulations regarding disposal of consumables.

Note

- Do not remove two or more ink tanks at the same time. Be sure to replace ink tanks one by one when replacing two or more ink tanks.

7. Insert the front end of the ink tank into the print head at a slant.

Make sure that the position of the ink tank matches the label.

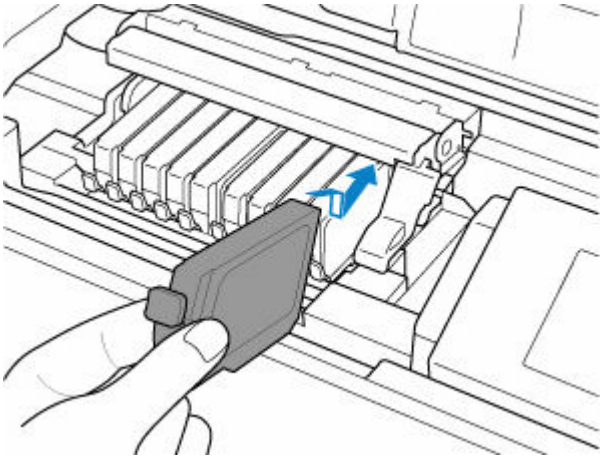

8. Press on the top of the ink tank until the ink tank snaps firmly into place.

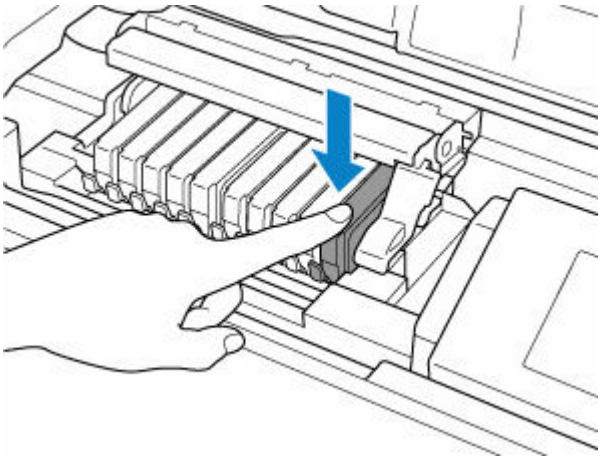

Important

- You cannot print if the ink tank is installed in the wrong position. Be sure to install the ink tank in the correct position according to the label on the print head holder.
- You cannot print unless all the ink tanks are installed. Be sure to install all the ink tanks.

9. Close the top cover.

The printer will automatically start mixing the ink. Wait until the printer stops making operating noise (it takes up to about 2 minutes or less).

Note

- If the error message appears on the LCD after the top cover is closed, take appropriate action.
- When you start printing after replacing the ink tank, the printer starts cleaning the print head automatically. Do not perform any other operations until the printer completes the cleaning of the print head.
- If the print head is out of alignment, as indicated by misaligned printed ruled lines or similar symptoms, align the print head.

  ➡ Automatic Adjustment to Straighten Lines and Align Colors

Notes on ink tanks

Important

- There may be ink around the ink holes of an ink tank you removed. Handle the ink tanks carefully during replacement. The ink may stain clothing.
- If you remove an ink tank, replace it immediately. Do not leave the printer with the ink tank removed.
- Use a new ink tank for replacement. Installing a used ink tank may cause the nozzles to clog. Furthermore, with such an ink tank, the printer will not be able to inform you when to replace the ink tank properly.
- Once an ink tank has been installed, do not remove it from the printer and leave it out in the open. This will cause the ink tank to dry out, and the printer may not operate properly when it is reinstalled. To maintain optimal printing quality, use an ink tank within six months of first use.

Note

- Color ink may be consumed even when printing a black-and-white document or when black-and-white printing is specified. Every ink is also consumed in the standard cleaning and deep cleaning of the print head, which may be necessary to maintain the performance of the printer.

  When an ink tank is out of ink, replace it immediately with a new one.

  ➡ Ink Tips

Checking Ink Level

You can check the remaining amount of ink on the LCD.

1. Select the ink status display area on the HOME screen.

   ➡ LCD and Operation Panel

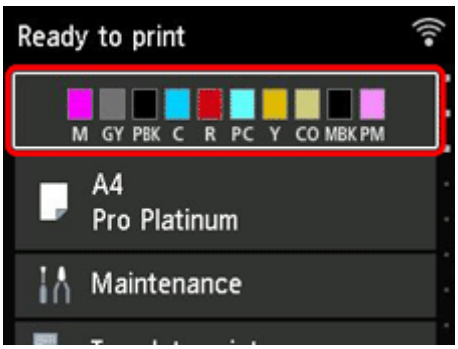

2. Check the ink status.

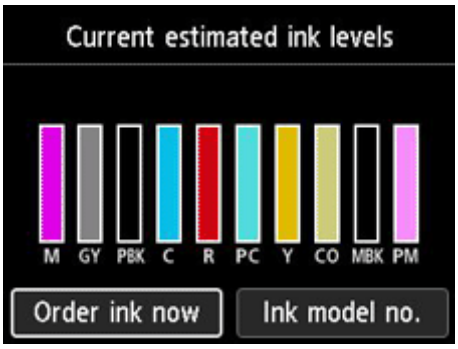

When the ink level is low, ⚠ is displayed above the ink level on the LCD, and ⛔ is displayed when ink runs out.

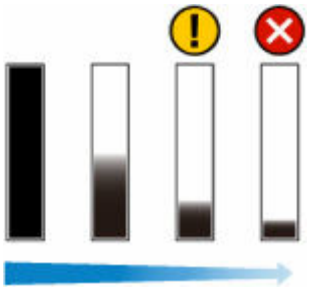

Note

- If a message is displayed indicating to check the remaining ink levels, or after tasks that consume a lot of ink such as large-format printing or head cleaning, check the remaining levels and replace ink tank as needed.

  ➡ Replacing Ink Tanks

- Select **Ink model no.** > **Order ink now** for information on where to purchase ink.

Cleaning the Printer

- Cleaning the Printer Exterior
- Cleaning Paper Feed Rollers
- Performing Bottom Plate Cleaning

Cleaning the Printer Exterior

Be sure to use a soft and dry cloth such as eyeglasses cleaning cloth and wipe off dirt on the surface gently. Smooth out wrinkles on the cloth if necessary before cleaning.

Important

- Be sure to turn off the power and unplug the power cord before cleaning the printer.

  ➡ Turning the Printer On and Off

- Do not use tissue paper, paper towels, rough-textured cloth, or similar materials for cleaning so as not to scratch the surface. Paper tissue powder or fine threads may remain inside the printer and cause problems such as print head blockage and poor printing results.
- Never use volatile liquids such as thinners, benzine, acetone, or any other chemical cleaner to clean the printer, as this may cause a malfunction or damage the surface of the printer.

Cleaning Paper Feed Rollers

If the paper feed roller is dirty or paper powder is attached to it, paper may not be fed properly. In this case, clean the paper feed roller. Cleaning will wear out the paper feed roller, so perform this only when necessary.

You need to prepare:

For the top feed: three sheets of A4 or Letter size plain paper

For the manual feed tray: a single sheet of A4 or Letter size plain paper

1. Select  **Maintenance** on the HOME screen.
2. Select **Roller Cleaning**.
3. Select **Yes**.
4. Select paper source (**Top feed** or **Manual tray**) for paper feed roller cleaning.
5. If **Top feed** is selected, select **No wiping**.

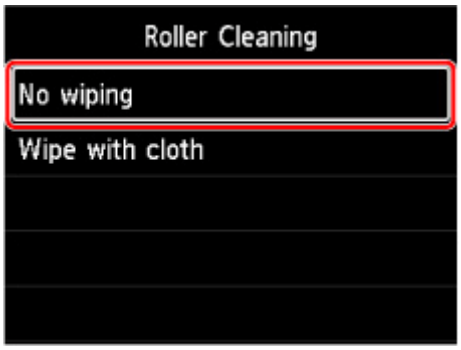

6. If **Top feed** is selected, remove any paper in top feed and press **OK** button.

   The paper feed roller will rotate as it is cleaned without paper.

   When the paper feed roller stops rotating, the cleaning is complete.

7. Follow the message to load A4 or Letter size plain paper in the paper source you selected.

   Load three sheets of paper in the top feed or a single sheet of paper in the manual feed tray.

   - Loading Paper in the Top Feed
   - Loading Paper in the Manual Feed Tray

8. Select **OK**.

   The printer starts cleaning. The cleaning will be complete when the paper is ejected.

9. When the completion message appears, select **OK**.

Note

- If the problem is not resolved after performing the paper feed roller cleaning with **No wiping**, wipe the paper feed roller with a damp cloth.

  Wiping Paper Feed Rollers with Damp Cloth

Wiping Paper Feed Rollers with Damp Cloth

1. Select **Wipe with cloth** on **Roller Cleaning** screen.

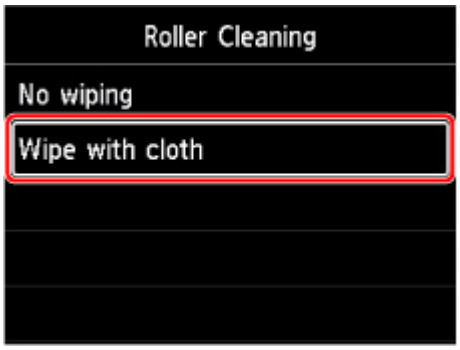

2. Check message and select **OK**.

3. Remove any paper in top feed and press **OK** button.

4. Turn the printer off.

   Turning the Printer On and Off

5. Make sure **ON** lamp is turned off and wipe paper feed roller with damp cloth.

   Wipe the paper feed roller (A) in the top feed with a moistened cloth or other materials. Do not touch the paper feed roller with your fingers, wipe it as rotating the shaft (B) with your fingers.

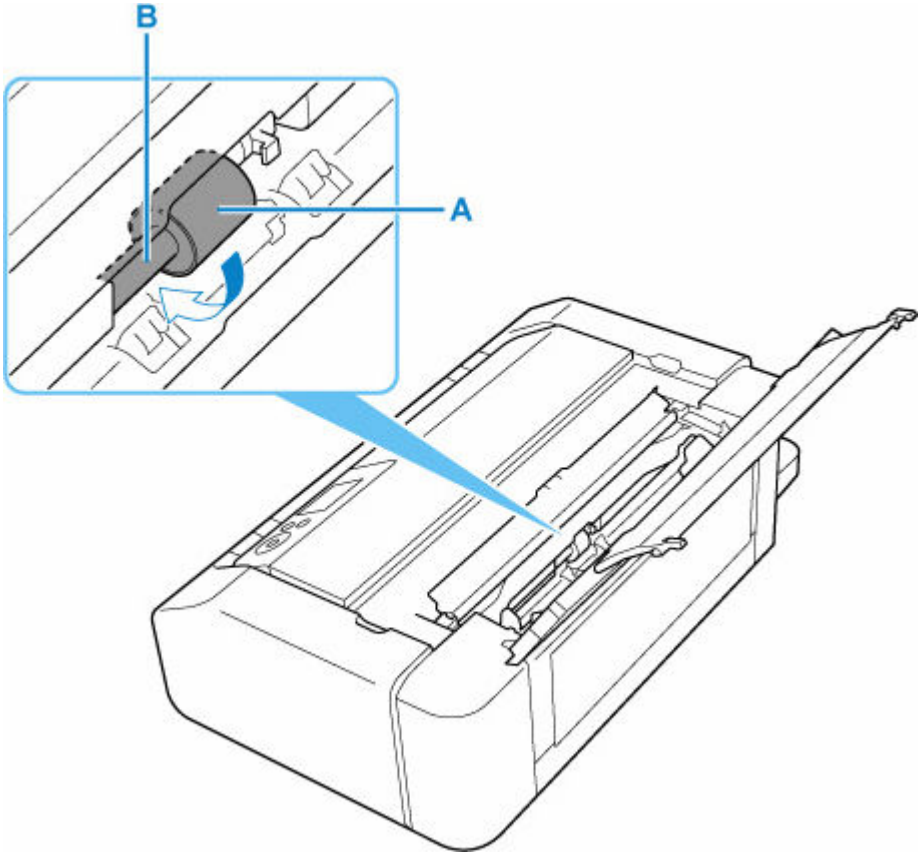

Note

- If the shaft is not rotated, turn off the printer and turn it on again.

6. After wiping with damp cloth, turn the printer on.

7. Perform paper feed roller cleaning (**No wiping**) again.

Note

- If printing data is sent to the printer when performing the paper feed roller cleaning with **Wipe with cloth**, the auto power on setting is disabled even if it is set to be automatically turned on.

  In this case, set the printer to be automatically turned on again.

  ➡ Power control

If the problem is not resolved after cleaning the paper feed roller, contact your nearest Canon service center to request a repair.

Performing Bottom Plate Cleaning

Remove stains from the inside of the printer. If the inside of the printer becomes dirty, printed paper may get dirty, so we recommend performing cleaning regularly.

You need to prepare: a sheet of A4 or Letter-sized plain paper*

* Be sure to use a new piece of paper.

1. Select  **Maintenance** on the HOME screen.
2. Select **Bottom Plate Cleaning**.
3. Select **Yes**.
4. Follow the message to remove any paper from the top feed, then press the **OK** button.
5. Fold A4 or Letter-sized plain paper so that short side is in thirds, unfold paper, then press the **OK** button.

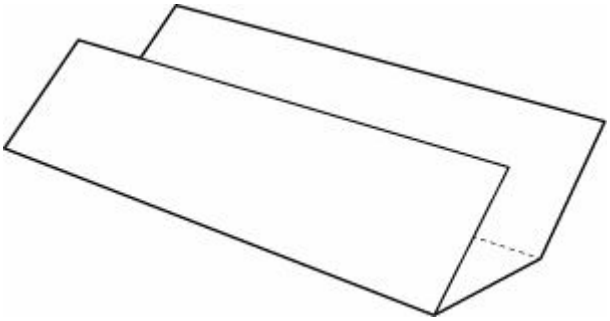

6. Load this sheet of paper sideways in the top feed with the open side facing you.

   ➡ Loading Paper in the Top Feed

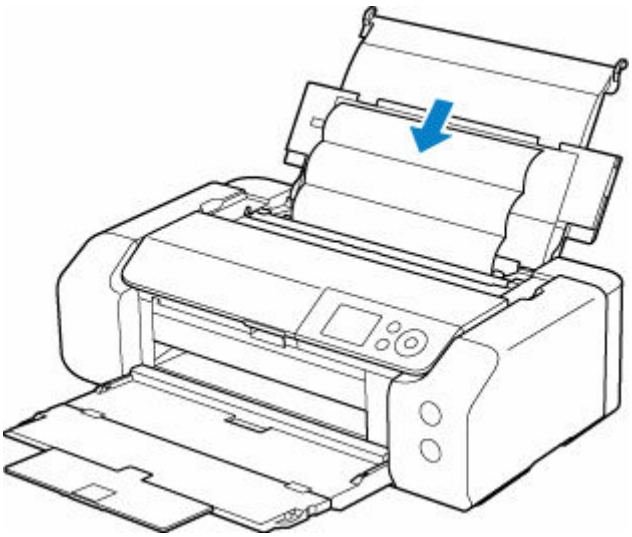

7. Press the **OK** button.

   The paper cleans the inside of the printer as it feeds through the printer.

   Check the folded parts of the ejected paper. If they are smudged with ink, perform Bottom Plate Cleaning again.

8. When the completion message appears, press the **OK** button.

Note

- When performing Bottom Plate Cleaning again, be sure to use a new piece of paper.

If the problem is not resolved after performing cleaning again, the protrusions inside the printer may be stained. Wipe off any ink from the protrusions using a cotton swab or the like.

Important

- Be sure to turn off the power and unplug the power cord before cleaning the printer.

  Turning the Printer On and Off

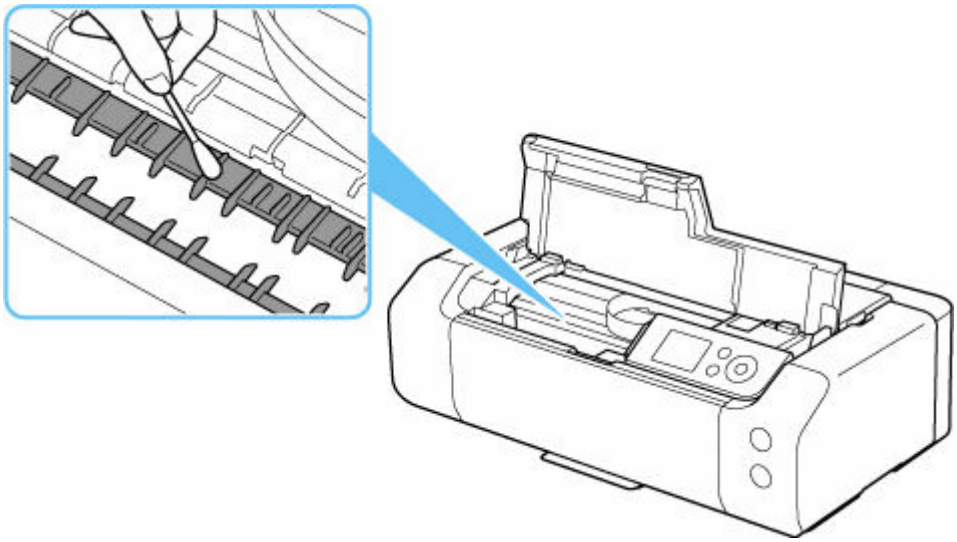

Performing Maintenance Functions from Your Computer (Windows)

- Maintenance Tab Description
- Cleaning the Print Heads
- Printing a Nozzle Check Pattern

Other Maintenance

- Transporting Your Printer
- Firmware update

Transporting Your Printer

When relocating the printer for changing your living place or repairing it, make sure of the following.

Important

- Pack the printer in a sturdy box so that it is placed with its bottom facing down, using sufficient protective material to ensure safe transport.
- With the print head and ink tank left installed in the printer, press the **ON** button to turn off the power. This allows the printer to automatically cap the print head, thus preventing it from drying.
- After packing, do not tilt the box containing the printer or turn it on its side or upside down. Doing so may cause the ink to leak during transport and cause damage to the printer.
- When a shipping agent is handling transport of the printer, have its box marked "THIS SIDE UP" to keep the printer with its bottom facing down. Mark also with "FRAGILE" or "HANDLE WITH CARE".

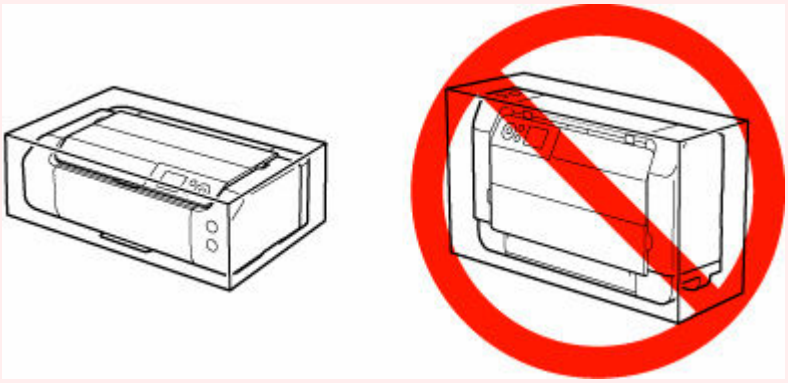

1. Turn the printer off.

   ➡ Turning the Printer On and Off

2. Check that **ON** lamp is off and unplug power cord.

   ## Important

   - Do not unplug the printer while the **ON** lamp is lit or flashing, as it may cause malfunction or damage to the printer, making the printer unable to print.

3. Retract trays.

4. Unplug the printer cable from the computer and from the printer, then unplug the power cord from the printer.

5. Use adhesive tape to secure all the covers on the printer to keep them from opening during transportation. Then pack the printer in the plastic bag.

6. Attach the protective material to the printer when packing the printer in the box.

Firmware update

Important

- When you use this function, make sure the printer is connected to the Internet.
- The administrator password is required to change settings if it is enabled for changing settings using the operation panel.

Using Operation Panel

1. Select  **Various settings** on the HOME screen.
2. Select **Printer settings**.
3. Select **Firmware update**.

   If an administrator password is set, enter the password.
4. Select **Install update**.
5. Select **Yes**.
6. Check message and select **Start update**.

Using Remote UI

1. Start up Remote UI.

   ➡ Start up Remote UI
2. Select **Firmware update**.
3. Select **Install update**.
4. Check message and select **Update**.

Note

- If the firmware update is not complete, check the following and take an appropriate action.
  - Check the network settings such as a wireless router.
  - If **Cannot connect to the server.** is displayed on the LCD, select **OK** and try again after a while.

Frequently Asked Questions

Problems with the Printing Quality



Unevenness, Banding, Faint

- Printing is faint/Streaks
- Banding in different colors occurs/Colors in printed images are uneven

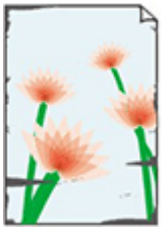

dirt

- Paper Is Smudged/Printed Surface Is Scratched/Ink Blots/Paper Curl
- Back of Paper Is Smudged



colors are inaccurate

- Printed colors are inaccurate
- Documents are printed in monochrome



Line

- Lines Are Misaligned/Distorted

Others

- Lines Incomplete or Missing (Windows)
- Images Incomplete/Cannot Complete Printing
- Vertical Line Next to Image

General FAQ

- Software does not work on macOS 15 or later
- When Error Occurred
- Printer Connection Methods
- Solve Network Troubles with The Printer's Diagnostic Functions
- Cannot Proceed Beyond Printer Connection Screen (Cannot Find Printer Connected via USB)
- Printer Does Not Print
- Failed to Printer Driver Installation (Windows)

Search by Category

Cannot Configure Network Settings

- Message Appears on Computer During Setup
- Cannot Proceed Beyond Printer Connection Screen (Cannot Find Printer Connected via USB)
- "Failed to connect to the wireless router." Appears
- Printer Cannot Be Used After Replacing Wireless Router or Changed Router Settings
- Privacy Separator/SSID Separator/Network Separation Function
- Setting Up Using Smartphone/Tablet

Cannot Find Printer on Network

- Cannot Find Printer on Network
- Searching Printer by IP Address or Host Name During Setup

Cannot Print over Network

- Cannot Print from Smartphone/Tablet
- Cannot Print Using AirPrint

Network Connection Problems

- Network Settings and Common Problems
- Solve Network Troubles with The Printer's Diagnostic Functions
- Network Key (Password) Unknown
- Checking Wireless Router SSID/Key
- Cannot Remember Printer's Password
- Checking Network Information

- Restoring Printer's LAN Settings to Defaults
- Cannot Connect Smartphone/Tablet to Wireless Router
- Checking Wireless Router Network Name (SSID) for Smartphone/Tablet

Printer Problems

- When Error Occurred
- Printer Does Not Turn On
- Printer Turns Off Unexpectedly or Repeatedly
- USB Connection Problems
- Switching Printer's Connection to Network or Devices
- LCD Is Off
- Print Head Holder Does Not Move to Replacement Position
- Printer Status Monitor Not Displayed (Windows)
- Updating Printer Firmware

Installation and Download Problems

- Failed to Printer Driver Installation (Windows)
- Updating Printer Drivers in Network Environment (Windows)
- Disable Function to Send Usage Information of Printer
- Setup Application Asks for the Administrator's Username and Password (Windows)
- Enable Printing from PC/Smartphone/Tablet
- Installing Printer Drivers on PC without Network Connection (Windows)

Printing Problems

- Printer Does Not Print
- Printing Stops
- Cannot Print on the Disc Label
- Default Printer Keeps Changing (Windows)
- Change to Offline (Windows)/Cannot Communicate (Windows)
- No Ink Level Appears in Canon IJ Status Monitor (Windows)

Paper is not Fed or Ejected Properly

- What to Do When Paper Is Jammed
- Printer Does Not Pick up or Feed the Paper/"No Paper" Error
- Paper Does Not Feed from Paper Source Specified in Printer Driver (Windows)
- What to Do If Paper Is Not Fed/Output Normally

Paper Setting Problems

- I want to know the paper types that can be used in this printer

Ink-related Problems

- Ink Does Not Come Out
- Printer consumes a lot of ink

Problems with the Printing Quality

- Printing is faint/Streaks
- Banding in different colors occurs/Colors in printed images are uneven
- Paper Is Smudged/Printed Surface Is Scratched/Ink Blots/Paper Curl
- Back of Paper Is Smudged
- Printed colors are inaccurate
- Documents are printed in monochrome
- Lines Are Misaligned/Distorted
- Lines Incomplete or Missing (Windows)
- Images Incomplete/Cannot Complete Printing
- Vertical Line Next to Image

Printing is faint/Streaks

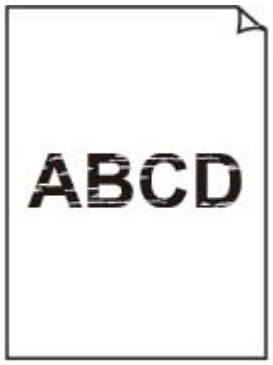

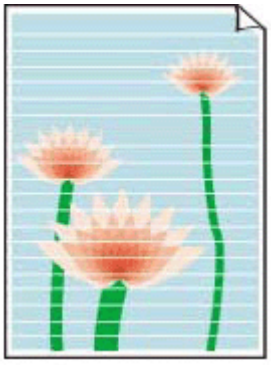

Check 1 Do page size and media type settings match size and type of loaded paper?

If these settings do not match, it is not possible to obtain the proper result.

If you are printing a photograph or an illustration, an incorrect paper type setting may reduce the quality of the printout color.

Also, if you print with an incorrect paper type setting, the printed surface may be scratched.

- **Printing from your computer**

  Check the settings using the Printer Driver.

  ➡ Basic Printing Setup (Windows)
  ➡ Basic Printing Setup (macOS)

- **Printing from your smartphone/tablet using**

  Check the settings on the App.

  ➡ Print Photos from Your Smartphone

Check 2 Make sure appropriate print quality is selected (see list above).

Select a print quality suited to the paper and to what you are printing. If you notice blurs or uneven colors, increase the print quality setting and retry the printing.

Check 3 Is the reverse side of the paper being used for printing?

Print on the printing surface.

Check 4 Is the Print head nozzle blocked?

Print a test pattern to check the nozzles and see if they are clogged.

- Checking for Nozzle Clogging
- Maintenance Procedure

Note

- To automatically check for nozzle blockages after printing, set **Auto nozzle check** in the LCD menu to a setting other than **Disable**.
  - Auto maintenance settings

Check 5 Are paper scraps stuck in the printer?

Remove paper scraps left inside the printer.

- If the paper is jammed inside the printer

Banding in different colors occurs/Colors in printed images are uneven





Check 1 Do page size and media type settings match size and type of loaded paper?

If these settings do not match, it is not possible to obtain the proper result.

If you are printing a photograph or an illustration, an incorrect paper type setting may reduce the quality of the printout color.

Also, if you print with an incorrect paper type setting, the printed surface may be scratched.

- **Printing from your computer**

  Check the settings using the Printer Driver.

  ➡ Basic Printing Setup (Windows)
  ➡ Basic Printing Setup (macOS)

- **Printing from your smartphone/tablet using**

  Check the settings on the App.

  ➡ Print Photos from Your Smartphone

Check 2 Make sure appropriate print quality is selected (see list above).

Select a print quality suited to the paper and to what you are printing. If you notice blurs or uneven colors, increase the print quality setting and retry the printing.

Check 3 Is the Print head nozzle blocked?

Print a test pattern to check the nozzles and see if they are clogged.

➡ Checking for Nozzle Clogging

Note

- To automatically check for nozzle blockages after printing, set **Auto nozzle check** in the LCD menu to a setting other than **Disable**.
  - ➡ Auto maintenance settings
  - ➡ Maintenance Procedure

Check 4 Perform print head alignment.

➡ Automatic Adjustment to Straighten Lines and Align Colors

Note

- If the problem is not resolved after performing the print head alignment, perform print head alignment manually.
  - ➡ Manual Adjustment to Straighten Lines and Align Colors

Check 5 Make sure clear coating area setting.

- For Windows:

  On **Media/Quality** sheet, select **Manual** for **Color/Intensity**, and then click **Set...**.

  If **Clear Coating Area** in **Clear Coating** sheet of the printer driver is set to **Auto**, Clear Coating may have an unexpected effect on the printing result depending on the image.

  In this case, set **Clear Coating Area** to **Overall**.

  ➡ Changing the Clear Coating Settings

- For macOS:

  If **Clear Coating Area** in **Advanced Paper Settings** in the Print dialog is set to **Auto**, Clear Coating may have an unexpected effect on the printing result depending on the image.

  In this case, set **Clear Coating Area** to **Overall**.

  ➡ Changing the Clear Coating Settings

Check 6 Enable unidirectional printing function.

On the paper selection screen, select **Advanced**, and set **Unidirectional printing** to **ON**.

Note that the printing speed will be slower when the unidirectional printing function is enabled.

Check 7 Color may be uneven if printing materials were stacked while drying.

To avoid uneven colors, we recommend drying each sheet separately.

Check 8 If you print on photo paper and notice some streaks or uneven colors, select **Lightweight Photo Paper A** from a list of paper types in your printer driver and printer's print settings.

If you select **Lightweight Photo Paper A** and notice some smudges or blurs on the printed area, change the paper type to **Lightweight Photo Paper B** in the print settings.Print quality or ink usage results may differ from those obtained when using the print settings for Canon genuine papers.

How to configure the paper type in the printer driver's print settings

- Basic Printing Setup (Windows)
- Basic Printing Setup (macOS)

How to configure the paper type in the printer's printer settings

- Paper-related settings

Note

- If you cannot find the paper types above in the list of print papers in your printer or printer driver, use the Media Configuration Tool to update the print media information.
  - Managing Paper Information on Printer Using Media Configuration Tool

Paper Is Smudged/Printed Surface Is Scratched/Ink Blots/Paper Curl



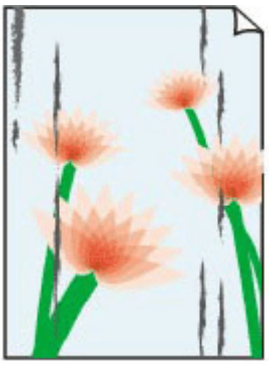



Check 1 Do page size and media type settings match size and type of loaded paper?

If these settings do not match, it is not possible to obtain the proper result.

If you are printing a photograph or an illustration, an incorrect paper type setting may reduce the quality of the printout color.

Also, if you print with an incorrect paper type setting, the printed surface may be scratched.

- **Printing from your computer**

  Check the settings using the Printer Driver.

  ➡ Basic Printing Setup (Windows)
  ➡ Basic Printing Setup (macOS)

- **Printing from your smartphone/tablet using** 

  Check the settings on the App.

  ➡ Print Photos from Your Smartphone

Check 2 Make sure appropriate print quality is selected (see list above).

Select a print quality suited to the paper and to what you are printing. If you notice blurs or uneven colors, increase the print quality setting and retry the printing.

Check 3 Check paper type.

Make sure you are using the right paper for what you are printing.

➡ Media Types You Can Use

Check 4 Correct curl before loading paper.

When using **Photo Paper Plus Semi-gloss**, even if the sheet is curled, load one sheet at a time as it is. Rolling this paper in the opposite direction to flatten it may crack the paper surface and reduce the print quality.

We recommend putting unused paper back into the package and storing it flat.

- **Plain Paper:**

  Turn the paper over and reload it to print on the other side.

- **Other Paper such as postcards:**

  If the paper corners curl more than 0.1 in. / 3 mm (A) in height, the paper may smudge or may not feed properly. Follow the instructions below to correct the paper curl.



1. Roll up paper in opposite direction to paper curl as shown below.



2. Check that paper is now flat.

We recommend printing curl-corrected paper one sheet at a time.

Note

- Depending on paper type, the paper may smudge or may not feed properly even if it is not curled inward. Follow the instructions below to curl the paper outward up to 0.1 in. / 3 mm (C) in height before printing. This may improve the print result.

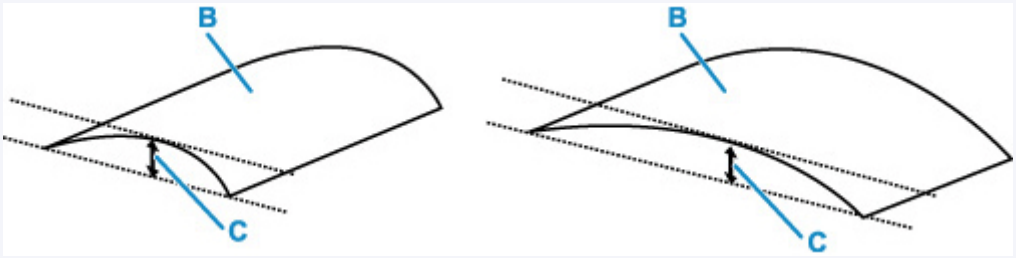

(B) Print side

We recommend feeding paper that has been curled outward one sheet at a time.

Check 5 Set printer to prevent paper abrasion.

Adjusting the setting to prevent paper abrasion will widen the clearance between the print head and the paper. If you notice abrasion even with the media type set correctly to match the paper, set the printer to prevent paper abrasion using the operation panel or the computer.

This may reduce the print speed.

* Once you have finished printing, undo this setting. Otherwise, it will apply to subsequent print jobs.

Select  on HOME screen, select **Various settings** > **Printer settings** > **Print settings** in this order, and then set **Prevent paper abrasion** to **ON**.

➡ Print settings

Check 6 If brightness is set low, increase brightness setting and try printing again.

If you are printing with a low brightness setting on plain paper, the paper may absorb too much ink and become wavy, causing paper abrasion.

- Printing from your computer

  Check the brightness setting in the Printer Driver.

  ➡ Adjusting Brightness (Windows)
  ➡ Adjusting Brightness (macOS)

Check 7 Specify a paper size that has 25 mm margins.

If the top or bottom edge of the printing surface has been scratched or smudged, print with a paper size that has wide margins (25 mm margins).

When you print on **Photo Paper Pro Premium Matte** or **Matte Photo Paper**, we recommend that you print with a 25 mm margins paper size or 4" x 6" (10 x 15 cm) size.

➡ Sizes for 0.98 inch (25 mm) Margin Paper

Check 8 Do not print outside recommended printing area.

If you print outside the recommended printing area of your paper, ink may stain the lower edge of the paper.

Resize the document using application software.

➡ Print Area

Check 9 Is paper feed roller dirty?

Clean paper feed roller.

➡ Cleaning Paper Feed Rollers

Note

- Cleaning the paper feed roller abrades it, so do this only when necessary.

Check 10 Is inside of printer dirty?

During 2-sided printing, ink may stain the inside of the printer, smudging the printout.

Perform bottom plate cleaning to clean inside of printer.

➡ Performing Bottom Plate Cleaning

Note

- To prevent staining inside the printer, be sure to set the correct paper size.

Check 11 Increase the print interval.

Increasing the print interval allows the printed surface to dry, preventing smudges and scratches.

Press the **HOME** button, select **Various settings** > **Printer settings** > **Paper-related settings** > **Advanced paper settings**. Select a media type, select **Pause between pages**, and then select a interval setting.

Note

- Alternatively, press the **HOME** button, select  (Paper settings display area), and select **Advanced** on **Top feed paper information** screen to display **Pause between pages** screen.

Check 12 Use Photo Paper to print photos.

To print data with high color saturation such as photographs or images with dark colors, we recommend that you use **Photo Paper Plus Glossy II** or other Canon specialty paper.

➡ Media Types You Can Use

Back of Paper Is Smudged

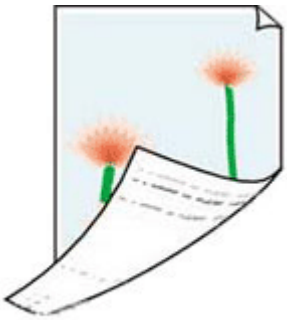

Check 1 Do page size and media type settings match size and type of loaded paper?

If these settings do not match, it is not possible to obtain the proper result.

If you are printing a photograph or an illustration, an incorrect paper type setting may reduce the quality of the printout color.

Also, if you print with an incorrect paper type setting, the printed surface may be scratched.

- **Printing from your computer**

  Check the settings using the Printer Driver.

  ➡ Basic Printing Setup (Windows)
  ➡ Basic Printing Setup (macOS)

- **Printing from your smartphone/tablet using** 

  Check the settings on the App.

  ➡ Print Photos from Your Smartphone

Check 2 Make sure appropriate print quality is selected (see list above).

Select a print quality suited to the paper and to what you are printing. If you notice blurs or uneven colors, increase the print quality setting and retry the printing.

Check 3 Perform bottom plate cleaning to clean inside of printer.

➡ Performing Bottom Plate Cleaning

Note

- During too much printing, ink may stain the inside of the printer.

Printed colors are inaccurate



Check 1 Do page size and media type settings match size and type of loaded paper?

If these settings do not match, it is not possible to obtain the proper result.

If you are printing a photograph or an illustration, an incorrect paper type setting may reduce the quality of the printout color.

Also, if you print with an incorrect paper type setting, the printed surface may be scratched.

- **Printing from your computer**

  Check the settings using the Printer Driver.

  ➡ Basic Printing Setup (Windows)
  ➡ Basic Printing Setup (macOS)

- **Printing from your smartphone/tablet using**

  Check the settings on the App.

  ➡ Print Photos from Your Smartphone

Check 2 Make sure appropriate print quality is selected (see list above).

Select a print quality suited to the paper and to what you are printing. If you notice blurs or uneven colors, increase the print quality setting and retry the printing.

Check 3 Is the Print head nozzle blocked?

Print a test pattern to check the nozzles and see if they are clogged.

- Checking for Nozzle Clogging
- Maintenance Procedure

Note

- To automatically check for nozzle blockages after printing, set **Auto nozzle check** in the LCD menu to a setting other than **Disable**.
  - Auto maintenance settings

Check 4 Has color been adjusted in the printer driver?

Follow the steps below to adjust color settings.

- Windows

  On **Media/Quality** sheet of the printer driver, select **Manual** for **Color/Intensity** and click **Set...**. On **Color Adjustment** sheet, adjust the color.

  - Media/Quality Tab Description (Windows)

- macOS

  Adjust the color settings in the printer driver **Color Options**.

  - Color Options (macOS)

Check 5 Has the computer or monitor color been adjusted?

Take the actions below.

- Refer to the computer and monitor documentation to adjust the colors.
- Adjust the settings of the color management software, referring to the software documentation as needed.

Documents are printed in monochrome



Check 1 Is the **Black and White Photo Print** check box set on in the printer driver?

- Windows

  Clear the **Black and White Photo Print** check box in the **Basic Settings** sheet of the printer driver, and then redo the printing.

  ➡ Basic Settings Tab Description (Windows)

- macOS

  Clear the **Black and White Photo Print** check box in **Quality & Media** of the printer driver, and then redo the printing.

  ➡ Quality & Media (macOS)

Note

- If the paper for the monochrome print is selected in **Media Type** of the printer driver, the **Black and White Photo Print** check box cannot be cleared. In that case, select the paper other than that for the monochrome print in **Media Type**.

Check 2 The print head nozzle may be blocked

Print a test pattern to check the color ink nozzles and see if they are clogged.

➡ Checking for Nozzle Clogging

Note

- To automatically check for nozzle blockages after printing, set **Auto nozzle check** in the LCD menu to a setting other than **Disable**.

  ➡ Auto maintenance settings
  ➡ Maintenance Procedure

Lines Are Misaligned/Distorted



Check 1 Do page size and media type settings match size and type of loaded paper?

If these settings do not match, it is not possible to obtain the proper result.

If you are printing a photograph or an illustration, an incorrect paper type setting may reduce the quality of the printout color.

Also, if you print with an incorrect paper type setting, the printed surface may be scratched.

- **Printing from your computer**

  Check the settings using the Printer Driver.

  ➡ Basic Printing Setup (Windows)
  ➡ Basic Printing Setup (macOS)

- **Printing from your smartphone/tablet using** 

  Check the settings on the App.

  ➡ Print Photos from Your Smartphone

Check 2 Make sure appropriate print quality is selected (see list above).

Select a print quality suited to the paper and to what you are printing. If you notice blurs or uneven colors, increase the print quality setting and retry the printing.

Check 3 Perform print head alignment.

If printed lines are misaligned/distorted or print results are otherwise unsatisfactory, adjust the print head position.

➡ Automatic Adjustment to Straighten Lines and Align Colors

Note

- If the problem is not resolved after performing the print head alignment, perform print head alignment manually.

  Manual Adjustment to Straighten Lines and Align Colors

Check 4 Increase print quality and try printing again.

Increasing the print quality using the printer driver may improve the print result.

Lines Incomplete or Missing (Windows)

	Tokyo	London
Jan.	12,000	10,500
Feb.	11,500	10,800
Mar.	13,800	12,800
Apr.	12,000	10,500
May.	11,500	10,800
June	13,800	12,800

Check 1 Are you using Page Layout Printing or Binding Margin function?

When the Page Layout Printing or Binding margin function is in use, thin lines may not be printed. Try thickening the lines in the document.

Check 2 Are you trying to print a large data file? (Windows)

If you are trying to print a large data file, printing may not be performed properly due to missing print data.

Click **Print Options** on **Page Setup** sheet of the printer driver. Then make sure **Prevention of Print Data Loss** is set to **On (Weak)** in the dialog that appears.

If printing does not start even though **Prevention of Print Data Loss** is set to **On (Weak)**, set it to **On (Strong)** and start printing again.

For details, refer to Page Setup Tab Description.

Important

- Selecting **On (Strong)** for **Prevention of Print Data Loss** may reduce print quality.
- After printing is completed, select **Off** for **Prevention of Print Data Loss**.

Images Incomplete/Cannot Complete Printing



If the printing of photos, images, stops in the middle of printing and cannot be printed to the end, check the following items.

Check 1 Select setting not to compress printing data (Windows).

If you select the setting not to compress the printing data with an application software you are using, the printing result may be improved.

Click **Print Options** on **Page Setup** sheet of the Printer Driver. Select the **Do not allow application software to compress print data** check box and click **OK**.

Important

- Clear the check box once printing is complete.

Check 2 Are you trying to print a large data file? (Windows)

If you are trying to print a large data file, printing may not be performed properly due to missing print data.

Click **Print Options** on **Page Setup** sheet of the printer driver. Then make sure **Prevention of Print Data Loss** is set to **On (Weak)** in the dialog that appears.

If printing does not start even though **Prevention of Print Data Loss** is set to **On (Weak)**, set it to **On (Strong)** and start printing again.

For details, refer to Page Setup Tab Description.

Important

- Selecting **On (Strong)** for **Prevention of Print Data Loss** may reduce print quality.
- After printing is completed, select **Off** for **Prevention of Print Data Loss**.

Vertical Line Next to Image

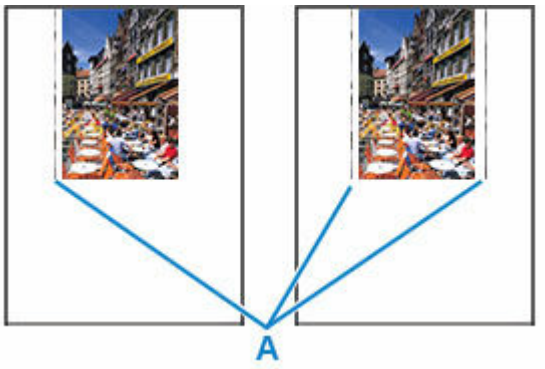

Check Do page size and media type settings match size and type of loaded paper?

If these settings do not match, it is not possible to obtain the proper result.

If you are printing a photograph or an illustration, an incorrect paper type setting may reduce the quality of the printout color.

Also, if you print with an incorrect paper type setting, the printed surface may be scratched.

- **Printing from your computer**

  Check the settings using the Printer Driver.

  - Basic Printing Setup (Windows)
  - Basic Printing Setup (macOS)

- **Printing from your smartphone/tablet using** Canon

  Check the settings on the App.

  - Print Photos from Your Smartphone

Note

- The direction or pattern of the vertical lines (A) may vary depending on the image data or the print setting.
- This printer performs automatic cleaning when necessary to keep printouts clean. A small amount of ink is ejected for cleaning.

  Although the ink is normally ejected onto the ink absorber at the outer edge of the paper, it may get onto the paper if the loaded paper is larger than the set size.

Cannot Configure Network Settings

- Message Appears on Computer During Setup
- Cannot Proceed Beyond Printer Connection Screen (Cannot Find Printer Connected via USB)
- "Failed to connect to the wireless router." Appears
- Printer Cannot Be Used After Replacing Wireless Router or Changed Router Settings
- Privacy Separator/SSID Separator/Network Separation Function
- Setting Up Using Smartphone/Tablet

Message Appears on Computer During Setup

- Screen to Enter Password Appears During Setup (Windows)
- Encryption Settings Screen Appears When Wireless Router Selected (Windows)
- "You have connected the printer to the non encrypted wireless network" Appears

Q Screen to Enter Password Appears During Setup (Windows)

A

If the printer is set up for use with a network and an administrator password has been set, a screen asking you to enter the password appears.

Enter the same password as that specified for the printer.

Note

- An administrator password is already set for the printer at the start of use.

  For details:

  - Default Administrator Password

  For improved security, we recommend that you change the administrator password.

  - Setting Administrator Password on Operation Panel

Q Encryption Settings Screen Appears When Wireless Router Selected (Windows)

A

This screen appears automatically if the selected wireless router is encrypted. Set the same encryption settings as those set for the wireless router.

For more on encryption settings, see Performing/Changing Wi-Fi Settings.

Q "You have connected the printer to the non encrypted wireless network" Appears

A

Security is not configured on the wireless router. The printer can still be used, so continue the setup procedure and complete it.

Important

- If you connect to a network that is not protected with security measures, there is a risk of disclosing data such as your personal information to a third party.

Cannot Proceed Beyond Printer Connection Screen (Cannot Find Printer Connected via USB)

If you cannot proceed beyond the **Printer Connection** screen, check the following.

Check 1 Make sure USB cable is securely plugged in to printer and computer.

Connect the printer and the computer using a USB cable as the illustration below. The USB port is located at the back of the printer.

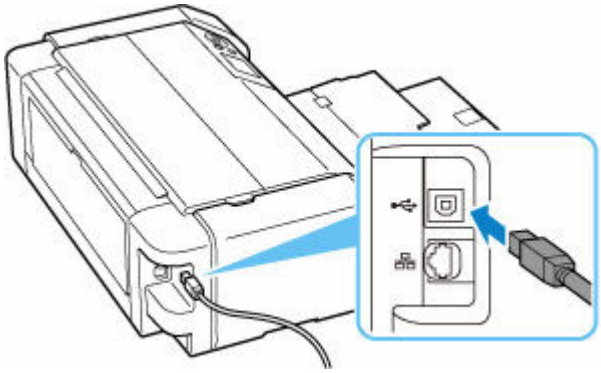

Important

- Check the orientation of the "Type-B" connector and connect to the printer. For details, refer to the instruction manual supplied with the USB cable.

Check 2 Follow procedure below to connect printer and computer again.

1. Unplug USB cable from printer and computer and connect it again.
2. Make sure no printer operation is in progress and turn off.
3. Turn on printer.

Check 3 Follow the steps below to install printer driver again.

1. Download the latest printer driver.
2. Turn off printer.
3. Restart computer.

   After restarting, install the latest printer driver downloaded in step 1.

Important

- When installing the printer driver, make sure you select the correct printer name.
- For Windows:

  To restart your computer, choose **Restart** instead of **Shut down**.

"Failed to connect to the wireless router." Appears

Each time you perform each check, select **OK** on the error screen to clear the error and set up the printer again.



- When Security Type is WPA/WPA2/WPA3
- When Security Type is set to Disable

When Security Type is WPA/WPA2/WPA3

Check 1 Check the password entered for the wireless router is correct.

If the password you entered is incorrect, enter the correct password.

Check 2 Check the wireless router's settings.

If the wireless router's DHCP function is off, turn it on and redo the wireless connection settings.

Check 3 Check the MAC address filtering's settings.

If MAC address filtering is enabled on the wireless router, change the settings to accept the printer's MAC address.

The MAC address of the printer can be viewed from **Printer information** > **System information**.

- Printer information

Check 4 Check the wireless router's security protocol (encryption method) settings.

For details on changing the wireless router settings, see the wireless router manual or contact its manufacturer.

When Security Type is set to Disable

Check Is the wireless router turned on?

If it is already turned on, turn it off, and then turn it back on.

Do not proceed to the next screen of this guide until the power is turned on. The connection to the wireless router will be temporarily disabled.

Printer Cannot Be Used After Replacing Wireless Router or Changed Router Settings

When wireless router is replaced or router settings are changed, the network settings of your computer, smartphone/tablet or printer must be reconfigured according to the new wireless router.



Check 1 Check if your computer or smartphone/tablet can be connected to Internet through the new wireless router.

If your computer or smartphone/tablet cannot be connected to Internet, check if the wireless router setup is completed and configure the settings on the computer or smartphone/tablet to connect to the wireless router.

Check 2 Resetup printer network.

Refer to Setup Guide to setup.

Note

- Wi-Fi Connection Assistant allows you to diagnose and repair the network status.

  Select the link below to download Wi-Fi Connection Assistant and install it.

  ➡ Checking Printer Connection Status Using Wi-Fi Connection Assistant

  Refer to below in regard to starting up Wi-Fi Connection Assistant.

  – For Windows:

  ➡ Starting Up Wi-Fi Connection Assistant

  – For macOS:

  ➡ Starting Up Wi-Fi Connection Assistant

If this does not solve the problem, see below.

- ➡ Cannot Communicate with Printer After Enabling MAC/IP Address Filtering or Encryption Key on Wireless Router
- ➡ With Encryption On, Cannot Communicate with Printer After Changing Encryption Type at Wireless Router
- ➡ Privacy Separator/SSID Separator/Network Separation Function

Q Cannot Communicate with Printer After Enabling MAC/IP Address Filtering or Encryption Key on Wireless Router

A

Check 1 Check wireless router setting.

For more on setting up a wireless router, see the instruction manual provided with the wireless router or contact its manufacturer. Make sure the computer and the wireless router can communicate with each other under this setting.

Check 2 If filtering MAC addresses or IP addresses at wireless router, check that MAC addresses or IP addresses for computer, network device, and printer are registered.

Check 3 If using WPA/WPA2/WPA3 key or a password, make sure encryption key for computer, network device, and printer matches key set for wireless router.

The length or format of the Wi-Fi password and authentication method must be identical among the wireless router, the printer, and your computer.

For details, see Setting an Encryption Key.

Note

- To configure IEEE802.1X/EAP (WPA/WPA2/WPA3 Enterprise), you also need to configure the authentication (Radius) server.

  Contact the network administrator for more information.

With Encryption On, Cannot Communicate with Printer After Changing Encryption Type at Wireless Router

If the printer cannot communicate with the computer after you change the encryption type for the wireless router, make sure the encryption type and passkey or password for the computer matches that of the wireless router.

➡ Cannot Communicate with Printer After Enabling MAC/IP Address Filtering or Encryption Key on Wireless Router

Privacy Separator/SSID Separator/Network Separation Function

If a privacy separator, SSID separator, or Network separation function is enabled on the wireless (mobile) router, you cannot perform setup. Before performing setup, disable these functions. For the procedure, refer to your wireless (mobile) router's instruction manual or visit the manufacturer's website.

Setting Up Using Smartphone/Tablet

Refer to Set Up and set up.

➡ Set Up

Note

- If you have a computer, you can set up the printer on the computer more easily.

Cannot Find Printer on Network

Note

- If you are using macOS 15 or later, you must configure each application to allow device discovery on the local network. Failing to enable device discovery may restrict software functionality or prevent it from starting properly.
  For detailed instructions, refer to "Setting Up Local Network Device Discovery."

- **Cannot Find Printer on Network**
- **Searching Printer by IP Address or Host Name During Setup**

Cannot Find Printer on Network

In the following cases, set up the printer again.

- When you buy a new computer or wireless router
- When you change the settings on your wireless router
- When the connection method (Wi-Fi / USB) of the printer is changed

For more on the setup procedure:

➡ Set Up

In Other Cases Than Above:

If the printer suddenly stops working, even though you have not changed the settings of the device or network to which it is connected, or if you cannot find the printer during the setup process, check and solve the problem, using Wi-Fi Connection Assistant. After the condition improves, redo the setup of the printer.

Wi-Fi Connection Assistant is a powerful solution tool for network problems.

Step 1 Check Basic Items for Network.

Step 2 Solve Problems, Using Wi-Fi Connection Assistant.

Step 3 If the Solution Tool Does Not Solve the Problem.

Step 1 : Check Basic Items for Network.

Check 1 Check power status.

Check your printer and the network device (wireless router, etc.) are turned on.

If you are in the process of setting up, interrupt it and check if the wireless router (modem) is turned on and then check if the printer is turned on.

1. Check if network device such as router is turned on.

   If network devices are not turned on, turn on the power. If the network devices are on, turn them off and on again.

   It may take a while for the network device to become ready for use once they are turned on.

   Proceed once the network device such as router is ready for use.

2. Check if printer is turned on.

If printer is not turned on, turn on the power. If the printer is on, turn it off and on again.

Proceed once you complete checking the power status above.

Check 2 Check PC network connection.

If your computer and network devices (wireless router, etc.) are fully configured, your computer is ready to connect to the network.

1. Check the settings of the network device (wireless router, etc.).

   Connect to the Internet and see if you can browse any web page. If you cannot view web pages on your computer, check wireless router network connection settings, such as IP address filtering, MAC address filtering, and DHCP function.

   To check the network name (SSID) of the wireless router the printer is connected to, print the network settings.

   ➡ Printing Network Settings

   Note

   - Depending on the wireless router, note that different network name (SSID) is assigned for a bandwidth (2.4 GHz or 5 GHz) or its usage (for PC or game machine), using alphanumeric characters at the end of network name (SSID).
   - For more on checking the settings of the wireless router, refer to the instruction manual supplied with the wireless router or contact the manufacturer.

   If you use an encryption key, specify it for the network name (SSID) you are using. For details, see Setting an Encryption Key.

2. Check PC network connection.

   For the procedures, refer to the instruction manual supplied with the computer, or contact the manufacturer.

Once you complete setting up the wireless router and your computer, configure the settings on your computer in order to view web pages, using the information of the wireless router.

Proceed once you complete checking the network connection above.

Check 3 Check printer's network settings.

➡ For Wi-Fi

➡ For Wired LAN

For Wi-Fi

Make sure the  is displayed on the LCD.

If  or  is displayed.

 or  indicates that the wireless router and the printer are not connected. Check the setting of printer. Reconsider the location of the wireless router and the printer in the next check.

If ,  or  only is displayed

The printer is not set to use Wi-Fi.

Select  on **HOME** screen > **LAN settings** > **Wi-Fi** in this order, and select **Enable** for **Enable/disable Wi-Fi**.

For Wired LAN

1. Check the power and LAN cable.

   When the printer cannot be found on the setup screen, using LAN connection setup, make sure that all the network devices are connected to the router and the hub via LAN cables and that all the devices are turned on.

   - **If LAN cable is not connected:**

     Connect the router, hub, computer and printer via LAN cables.

     Make sure the printer is turned on.

     ➡ Turning the Printer On and Off

     Make sure the printer, the router and the hub are turned on.

   - **If LAN cable is connected, and printer and network device are off:**

     Turn on printer and network device.

   - **If LAN cable is connected, and printer and network device are on:**

     Turn them off and on again.

     Note

     - Some devices require a couple of minutes after being turned on to become ready for use. Wait until all devices are ready before proceeding.

2. Check printer's Wired LAN settings.

   Make sure that the  is displayed on the printer's LCD.

   - **If icon is not displayed:**

     The printer is not set to use wired communication. Enable Wired LAN from the printer settings.

Select  **LAN settings** > **Wired LAN** on **HOME** screen, and sets **Enable/disable Wired LAN** to **Enable**.

Check 4 Check location of wireless router.

Make sure the printer is not placed too far away from the wireless router.

The printer can be up 50 m (164 ft.) from the wireless router indoors if unobstructed. Make sure the printer is close enough to the wireless router to be used.

Place the printer and wireless router where there are no obstacles between them. Wireless communication between different rooms or floors is generally poor. Wireless communication can be impeded by building materials containing metal or concrete. If the printer cannot communicate with the computer over a Wi-Fi due to a wall, place the printer and the computer in the same room.

In addition, if a device like a microwave oven that emits radio waves of the same frequency bandwidth as a wireless router is nearby, it may cause interference. Place the wireless router as far away from interference sources as possible.

Step 2 : Solve Problems, Using Wi-Fi Connection Assistant.

Diagnose and repair the network connections using Wi-Fi Connection Assistant.

Download Wi-Fi Connection Assistant from the below page, and install it on your computer.

➡ Checking Printer Connection Status Using Wi-Fi Connection Assistant

Refer to below in regard to starting up Wi-Fi Connection Assistant.

- **For Windows:**

  ➡ Starting Up Wi-Fi Connection Assistant

- **For macOS:**

  ➡ Starting Up Wi-Fi Connection Assistant

Step 3 : If the Solution Tool Does Not Solve the Problem.

Check 1 Make sure security software's firewall is off.

If your security software's firewall is on, a message may appear warning you that Canon software is attempting to access the network. If this warning message appears, set security software to always allow access.

If you are using any programs that switch between network environments, check their settings.

Check 2 If printer is connected to AirPort Base Station via Wi-Fi, make sure you use alphanumeric characters for network name (SSID). (macOS)

If your network name (SSID) contains characters other than single-byte alphanumeric characters, the connection is not established properly. Change the network (SSID) to use only single-byte alphanumeric characters.

Check 3 Solve network troubles with the printer's diagnostic functions.

See below.

➡ Solve Network Troubles with The Printer's Diagnostic Functions

Searching Printer by IP Address or Host Name During Setup

Note

- If you are using macOS 15 or later, you must configure each application to allow device discovery on the local network. Failing to enable device discovery may restrict software functionality or prevent it from starting properly.
  For detailed instructions, refer to "Setting Up Local Network Device Discovery."

If the printer cannot be found on the **Detect Printer** screen, the **Start Printer Connection** screen appears.

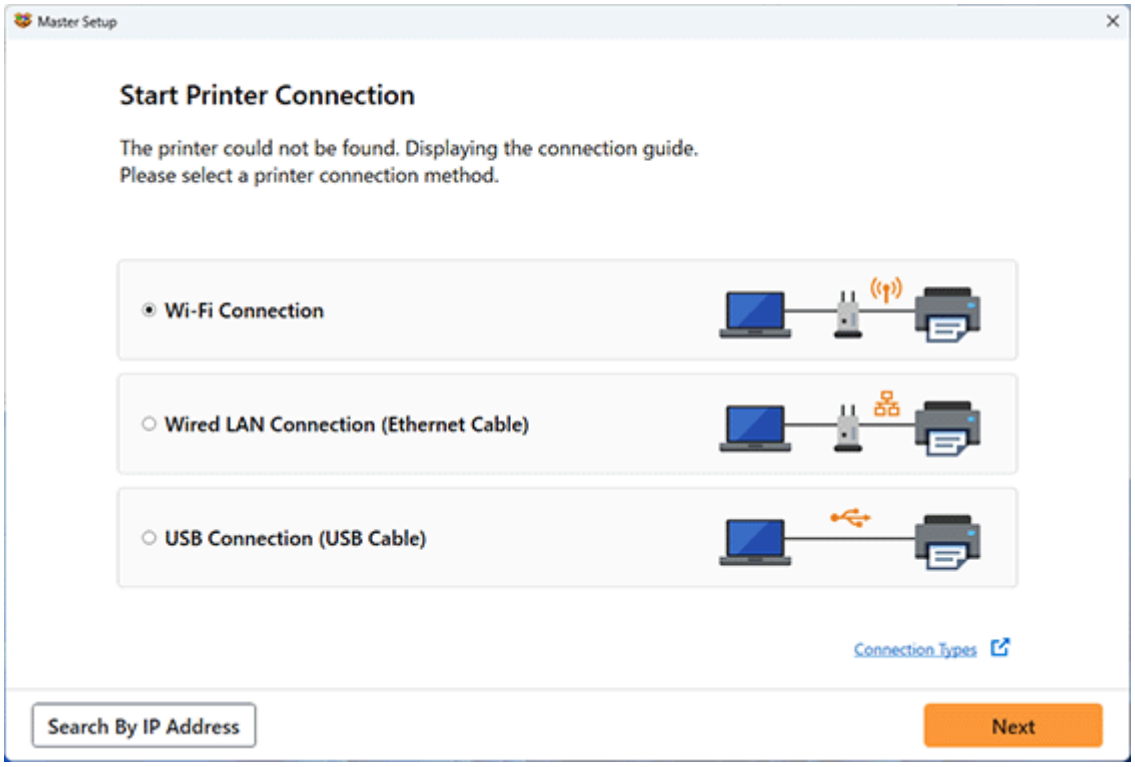

The Windows screen is used as an example above.

Clicking **Search By IP Address** allows you to search for a printer by specifying the IP address or host name of the printer.

1. Check printer's IP address or host name.

   To check the printer's IP Address or host name, print out the network settings information or use the operation panel to display it.

   - Display on the operation panel.

     ➡ LAN settings

   - Print the network settings.

➡ Printing Network Settings

Note

- If you use the printer in an office, ask the network administrator.

2. Specify searching method.

Select one of the methods below.

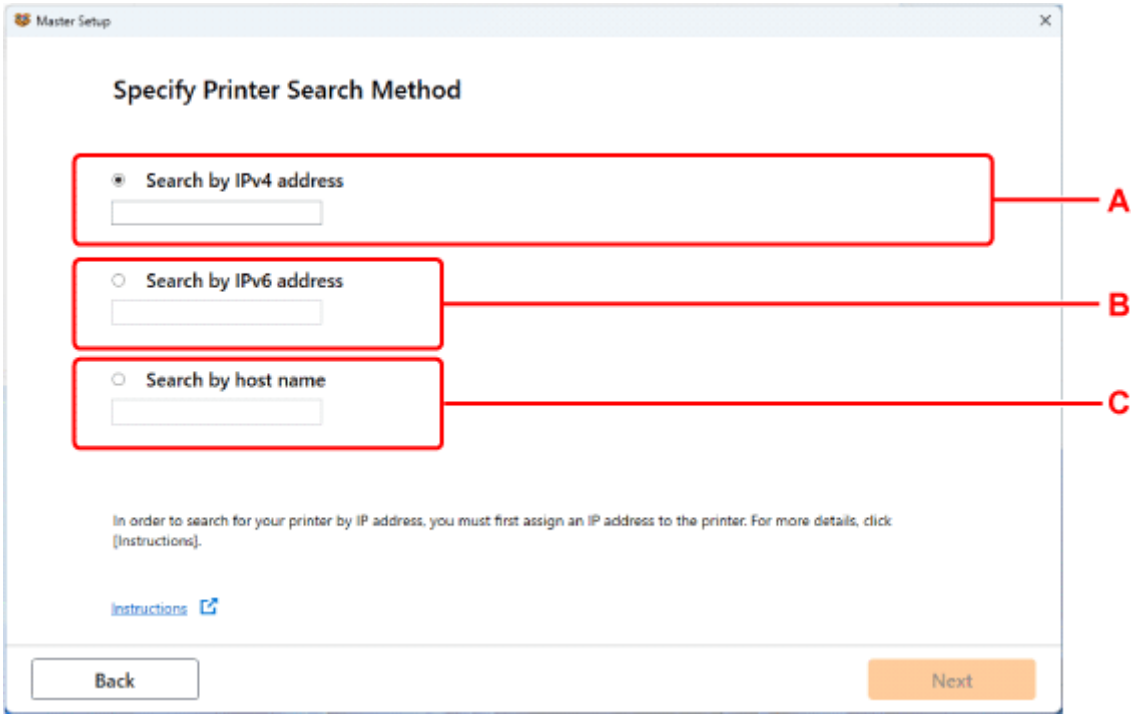

The Windows screen is used as an example above.

A: Search by IPv4 address

Select to search for printers by IPv4 address.

B: Search by IPv6 address

Select to search for printers by IPv6 address.

C: Search by host name

Select to search for printers by host name. A host name is referred to as LLMNR host name or Bonjour service name.

3. Enter IP address or host name and click **Next**.

Printer search starts.

If an error screen appears:

Resolve the error according to the instruction on the screen.

If the IP address you entered is already used for another device, follow the procedure below to specify printer's IP address.

1. Select  **LAN settings** on the HOME screen.

   ➡ LCD and Operation Panel

2. Select **Advanced**.

3. Select **Yes**.

4. Select **TCP/IP settings**.

   - **If you specify IPv4 address:**

     1. Select **IPv4**.

     2. Select **IP address**.

     3. Select **Manual setup**.

        Selecting **Auto setup** specifies the IP address automatically.

     4. Select **Yes** on the displayed screen.

     5. Enter IP address.

     6. Select **OK**.

     7. Enter subnet mask.

     8. Select **OK**.

     9. Enter default gateway.

     10. Select **OK**.

         The IPv4 address has been specified.

   - **If you specify IPv6 address:**

     1. Select **IPv6**.

     2. Select **Enable/disable IPv6**.

     3. Select **Enable**.

        The IPv6 address has been specified.

Important

- If firewall is enabled on the computer, printers on a different subnet may not be detected. Disable firewall.

If firewall interferes with printer search:

The operating system installed on your computer and the firewall function of the security software may unintentionally prevent communication for setup. Check if a firewall message appears.

- **If a firewall message appears:**

  If a firewall message appears warning that Canon software is attempting to access the network, set the security software to allow access.

  After allowing the software to access, return to setup and follow the instructions on the screen.

- **If no firewall message appears:**

  Temporarily disable the firewall and return to setup and follow the instructions on the screen.

  After the setup is complete, re-enable the firewall.

Note

- For more on firewall settings of your operating system or security software, see instruction manual or contact its manufacturer.

Cannot Print over Network

- Cannot Print from Smartphone/Tablet
- Cannot Print Using AirPrint

Cannot Print Using AirPrint

Check 1 Make sure printer is turned on.

➡ Turning the Printer On and Off

If the printer is turned on, cycle the power switch, and then check whether the issue is resolved.

Check 2 Make sure printer is registered to your computer.

Check 3 Make sure printer is connected by LAN to same group of networks (same subnet) as AirPrint compliant device when printing over LAN.

Check 4 Make sure printer has enough paper and ink.

Check 5 Make sure no error message is displayed on printer's LCD.

Cannot Print from Smartphone/Tablet

If you cannot Print from your smartphone/tablet, it is possible that your smartphone/tablet cannot communicate with the printer.

Check the cause of your problem according to the connection method.

- Cannot Communicate with Printer via Wi-Fi
- Cannot Connect to Printer through Wireless Direct

Note

- For problems on printing with other connection methods or more on performing settings of each connection method:
  - Using Cloud Service
  - Printing from iOS Device (AirPrint)

Q Cannot Communicate with Printer via Wi-Fi

A

If your smartphone/tablet cannot communicate with the printer, check the following.

Check 1 Check power status of printer, network devices (e.g. wireless router), and your smartphone/tablet.

- Turn on the printer or devices.
- If the power is already turned on, cycle the power switch.
- It may be necessary to resolve wireless router problems (e.g. update interval of a key, problems of DHCP update interval, energy saving mode) or to update the wireless router firmware.

For details, contact the manufacturer of your wireless router.

Check 2 Check settings of your smartphone/tablet.

Make sure Wi-Fi is enabled on your device.

For details, refer to your device's instruction manual.

Check 3 Is printer connected to wireless router?

- Use the icon on the LCD to check the connection status between the printer and wireless router.

  If the  is not displayed, Wi-Fi is disabled. Turn on wireless communication on the printer.
- Make sure the network settings of the printer (e.g. network name (SSID) or network key (password), etc.) are identical with those of the wireless router.

  To check the settings of the wireless router, refer to the instruction manual provided with it or contact its manufacturer.

To check the current network settings of the printer, print out the network settings information or use the operation panel to display it.

- Display on the operation panel of the printer.

  ➡ LAN settings

- Print the network settings.

  ➡ Printing Network Settings

Note

- If you have a computer, Wi-Fi Connection Assistant allows you to diagnose and repair the network status.

  Select the link below to download Wi-Fi Connection Assistant and install it.

  ➡ Checking Printer Connection Status Using Wi-Fi Connection Assistant

  Refer to below in regard to starting up Wi-Fi Connection Assistant.

  — For Windows:

  ➡ Starting Up Wi-Fi Connection Assistant

  — For macOS:

  ➡ Starting Up Wi-Fi Connection Assistant

Check 4 Are network settings of your smartphone/tablet identical with those of wireless router?

Make sure the network settings of the printer (e.g. network name (SSID) or network key (password), etc.) are identical with those of the wireless router.

To check the settings of your smartphone/tablet, refer to the instruction manual provided with it.

If the network settings of your smartphone/tablet are not identical with those of the wireless router, change the network settings of it to match with those of the wireless router.

Check 5 Make sure the printer is not placed too far away from the wireless router.

If the distance between the printer and wireless router is too far, wireless communication becomes poor. Place the printer and wireless router close to each other.

Check 6 There may be a problem with the signal. Monitor signal status and move printer and wireless router as necessary.

Place the printer and wireless router where there are no obstacles between them. Wireless communication between different rooms or floors is generally poor. Wireless communication can be impeded by building materials containing metal or concrete. If the printer cannot communicate with the computer over a Wi-Fi due to a wall, place the printer and the computer in the same room.

In addition, if a device like a microwave oven that emits radio waves of the same frequency bandwidth as a wireless router is nearby, it may cause interference. Place the wireless router as far away from interference sources as possible.

Check the signal strength on the LCD.

➡ LCD and Operation Panel

Note

- If the web page cannot be printed using an Android device, it may be possible to print it by changing Wireless Direct connection.

  ➡ Wireless Direct Connection

Cannot Connect to Printer through Wireless Direct

If your smartphone/tablet cannot communicate with the printer in the Wireless Direct, check the following.

Check 1 Check power status of printer and device (e.g. smartphone/tablet).

Turn on the printer or devices.

If the power is already turned on, cycle the power switch.

Check 2 Check if the  is displayed on the LCD of the printer.

If it is not displayed, Wireless Direct is disabled. Please turn on the Wireless Direct.

Check 3 Check settings of your smartphone/tablet.

Make sure Wi-Fi is enabled on your device.

For details, refer to your device's instruction manual.

Check 4 Check that printer is selected as connection for devices (e.g. smartphone/tablet).

Select the network name (SSID) for Wireless Direct specified for the printer as the connection destination for devices.

Check the destination on your device.

For details, refer to your device's instruction manual or visit the manufacturer's website.

To check the network name (SSID) for Wireless Direct specified for the printer, print out the network settings information or use the operation panel to display it.

- Display on the operation panel of the printer.

  ➡ LAN settings

- Print the network settings.

  ➡ Printing Network Settings

Check 5 Check that Wireless Direct password set for printer is entered correctly.

To check the password specified for the printer, print out the network settings information or use the operation panel to display it.

- Display on the operation panel of the printer.

➡ LAN settings

- Print the network settings.

  ➡ Printing Network Settings

Check 6 Check that printer is not placed too far away from device.

If the distance between the printer and the device is too far, wireless communication becomes poor. Place the printer and the device close to each other.

Check 7 Check that 5 devices are already connected.

Wireless Direct does not allow more than 5 devices to be connected.

Network Connection Problems

- Network Settings and Common Problems
- Solve Network Troubles with The Printer's Diagnostic Functions
- Switching Printer's Connection to Network or Devices
- Network Key (Password) Unknown
- Checking Wireless Router SSID/Key
- Cannot Remember Printer's Password
- Checking Network Information
- Restoring Printer's LAN Settings to Defaults
- Cannot Connect Smartphone/Tablet to Wireless Router
- Checking Wireless Router Network Name (SSID) for Smartphone/Tablet

Network Settings and Common Problems

Here are frequently asked questions on network.

Cannot Find Printer

- Cannot Find Printer on Network
- Cannot Proceed Beyond Printer Connection Screen (Cannot Find Printer Connected via USB)
- Searching Printer by IP Address or Host Name During Setup

Cannot Print or Connect

- Cannot Print from Smartphone/Tablet
- Cannot Print Using AirPrint
- Solve Network Troubles with The Printer's Diagnostic Functions

LAN Setting Tips/Changing LAN Settings

- Printer Connection Methods
- LAN settings
- Another Printer Found with Same Name
- Printing Network Settings
- Network Status and Troubleshooting

Solve Network Troubles with The Printer's Diagnostic Functions

- If the printer and wireless router are connected or the printer and computer are connected by USB cable but you cannot print:

  ➡ Change to Offline (Windows)/Cannot Communicate (Windows)

- In other cases than above:

  ➡ Cannot Find Printer on Network/Cannot Print

  ➡ Cannot Connect to Printer through Wireless Direct

Q Cannot Find Printer on Network/Cannot Print

A

Printing Out Network Settings Information:

Follow the procedure below to print out the network settings information.

Step 1 Check that printer and wireless router are turned on.

Turn the wireless router back on.

Wait about five minutes and then turn the printer back on.

Step 2 Check your devices (e.g. computer/smartphone/tablet) are connected to Internet.

Make sure that devices and the wireless router are connected to via Wi-Fi, and that the Internet can be used without problems.

Step 3 Make sure the printer's Wi-Fi setting is enabled and the  is displayed.

Step 4 Move the printer and device (computer/smartphone/tablet) closer to the wireless router.

Wireless communication quality deteriorates if the printer or devices are too far from the wireless router. Move the printer and device closer to the wireless router.

Step 5 Print the network settings

Print out the network settings information on your printer.

➡ Printing Network Settings

Checking Printed Network Settings Information:

From the printed network settings information, check the entries in item "2-2"

C-0

It is connected correctly. If, nevertheless, the printer is not found on the network or printing is not possible, check the following items.

Note

- If codes other than "C-0" are displayed at the same time in the item "2-2" see also the correspondence of the other codes.

Check 1 Check that security software's firewall is off.

A message may appear warning you that Canon software is attempting to access the network. If this warning message appears, set the security software to always allow access.

Quit the security software and make sure that the printer is recognized and ready to use. If so, the cause is the firewall setting. Change the firewall settings so that the printer is recognized and ready to use. For details, contact the manufacturer of the security software.

If you are using any programs that switch between network environments, check their settings.

Check 2 Does network name (SSID) of printer match network name (SSID) setting of wireless router that communicates?

Check the "3-2-6" item in the printed network settings information and the network name (SSID) of the wireless router you want to connect to. If they are not matched, check the SSID and password of the wireless router you want to connect to, and then setup manually.

Check 3 Is privacy separator, SSID separator, or Network separation function enabled on wireless router?

If it is enabled, disable these functions before performing the setup. To check the settings of the wireless router, refer to the instruction manual provided with it or contact its manufacturer.

Check 4 Are printer driver installed? (Windows)

If you are using Windows and printer driver are not installed, install it.

➡ Set Up

C-1

The printer's Wi-Fi setting is disabled. (You can also check if the Wi-Fi  does not appear on the printer's screen.)

Enable the Wi-Fi setting in the printer's settings screen.

C-3

No IP address is assigned. (You can also check that the item "3-2-12" in the printed network settings information is blank.)

Check the following items.

Check 1 Is printer set to obtain an IP address automatically, or is wireless router requesting manual addressing?

Refer to the wireless router's manual to enable DHCP (auto-acquisition) settings on the wireless router or to set a valid IP address on the printer.

Check 2 When you set printer's IP address manually, correct IP address may not be set.

Check the network name (SSID) and the password of the wireless router you want to connect to, the IP address applicable range, and then enter the appropriate IP address on the printer side. If you are unsure, set the printer's IP address to automatic (DHCP).

C-5

Unable to connect to the specified network. Check the following items.

Check 1 Check status of printer and network device (e.g. wireless router), and your computer/smartphone/tablet.

Communication with a wireless router must be tuned to either the 2.4 GHz or 5 GHz frequency band. The network name (SSID) of the 2.4 GHz frequency band and the network name (SSID) of the 5 GHz frequency band cannot be used in combination. Depending on the wireless router, note that different network name (SSID) is assigned for a bandwidth (2.4 GHz or 5 GHz) or its usage (for PC or game machine), using alphanumeric characters at the end of network name (SSID).

Check the network name (SSID) set for the printer, and match it with the network name (SSID) of the correct frequency band of the wireless router.

Check 2 Password on your wireless router may not match password you entered.

Passwords are case sensitive.

Enter the password correctly.

Check 3 Monitor signal status and move printer and wireless router as necessary.

- Place the printer and wireless router where there are no obstacles between them. Wireless communication between different rooms or floors is generally poor.
- Wireless communication can be impeded by building materials containing metal or concrete. If the printer cannot communicate with the computer over a Wi-Fi due to a wall, place the printer and the computer in the same room.
- After changing the installation location, print out the network settings information again and check the status of the signal. Compare with the value in section "3-2-1" in the printed network settings information to determine the installation location.

Check 4 Check wireless channel number of Wi-Fi you are using on computer.

Make sure that the wireless channel number on the wireless router is included in the wireless channel number you checked. If the wireless channel number set for the wireless router is not included, change the wireless channel number of the wireless router.

Check 5 In case of Wi-Fi connection, check if computer that can be accessed by wireless router is restricted.

The wireless router settings may be limiting the number of devices that can be connected at the same time. Remove or relax the restrictions.

To check the settings of the wireless router, refer to the instruction manual provided with it or contact its manufacturer.

Note

- To check the MAC address or IP address of your computer, see Checking Computer IP Address or MAC Address.

Check 6 If problem occurs only when wireless router is in energy-saving mode, turn off energy-saving mode of wireless router.

If the problem seems to occur suddenly, it may be resolved by updating the wireless router firmware (e.g. update interval of a key, problems of DHCP update interval, etc.). For details, refer to the wireless router's instruction manual.

Check 7 If printer is connected to AirPort Base Station via LAN, make sure you use alphanumeric characters for network name (SSID). (macOS)

If your network name (SSID) contains characters other than single-byte alphanumeric characters, the connection is not established properly. Change the network (SSID) of the printer to use only single-byte alphanumeric characters.

C-4

No default gateway is set.

When you set the IP address of the printer manually, enter a valid default gateway IP address. If you don't know the default gateway, set the IP address to automatic.

C-7

There may be a problem with the signal.

Check the following items.

Check Monitor signal status and move printer and wireless router as necessary.

- Place the printer and wireless router where there are no obstacles between them. Wireless communication between different rooms or floors is generally poor.
- Wireless communication can be impeded by building materials containing metal or concrete. If the printer cannot communicate with the computer over a Wi-Fi due to a wall, place the printer and the computer in the same room.
- After changing the installation location, print out the network settings information again and check the status of the signal. Compare with the value in section "3-2-1" in the printed network settings information and place the printer in the location with a higher value.

Note

- In some cases, "C-7" and "C-9" are displayed at the same time. In that case, refer to both items.

C-8

Too many clients are connected.

Wireless Direct does not allow more than 5 devices to be connected.

If you want to connect additional devices to the printer, unplug any devices that are not in use before adding them.

C-9

The noise level is high and does not differ from the signal level due to various devices other than the printer.

- If devices (microwave oven, external hard disk drive, and other USB 3.0 devices) that emit radio waves of the same frequency bandwidth as a wireless router is nearby, it may cause interference. Place the printer and the wireless router as far away from interference sources as possible.
- After you change the location of the printer, check the signal quality. Compare the value of "3-2-2" in the network settings information and place the printer in the location with a higher value.

Note

- In some cases, "C-7" and "C-9" are displayed at the same time. In that case, refer to both items.

C-10

No IP address is assigned by the wireless router.

Check the following items.

Check 1 Password on your wireless router may not match password you entered.

Passwords are case sensitive.

Enter the password correctly.

Check 2 Set up printer again and reconnect to Wi-Fi.

Check 3 Check DHCP on wireless router. If DHCP is off, set it on.

For details, refer to the wireless router's instruction manual.

C-11

The network name (SSID) remains the default value (The network name (SSID) has not been set). Check the network name (SSID) of the wireless router.

Verify the network name (SSID) and password of the wireless router you want to connect to, and then set it up manually.

Note

- Wi-Fi Connection Assistant allows you to diagnose and repair the network status.

  Select the link below to download Wi-Fi Connection Assistant and install it.

➡ Checking Printer Connection Status Using Wi-Fi Connection Assistant

Refer to below in regard to starting up Wi-Fi Connection Assistant.

- **For Windows:**
  - ➡ Starting Up Wi-Fi Connection Assistant
- **For macOS:**
  - ➡ Starting Up Wi-Fi Connection Assistant

Q Cannot Connect to Printer through Wireless Direct

A

Check the following items

Check 1 Check power status of printer and other devices (e.g. computer/smartphone/tablet).

Turn on the printer or devices.

If the power is already turned on, cycle the power switch.

Check 2 Check settings of your device (e.g. computer/smartphone/tablet).

Make sure Wi-Fi is enabled on your device.

For details, refer to the device's instruction manual.

Check 3 Print out network settings information.

See "Step 1" to "Step 5" in Cannot Find Printer on Network/Cannot Print.

In the printed network settings information, check if the item "2-2" is not "C-8". If this is the case, the number of connected printers is too many.

Wireless Direct does not allow more than 5 devices to be connected.

When you want to connect additional devices, disconnect any devices that are not in use before adding them.

Check 4 Check that printer is selected as connection for various devices (e.g. computer/smartphone/tablet).

Select the network name (SSID) for Wireless Direct specified for the printer as the connection destination for devices.

Check the destination on your device.

For details, refer to your device's instruction manual or visit the manufacturer's website.

To check the network name (SSID) for Wireless Direct specified for the printer, display it using the operation panel of the printer or print out the network settings information of the printer.

- Display on the operation panel of the printer.

➡ LAN settings

- Print the network settings.

  ➡ Printing Network Settings

Check 5 Check that Wireless Direct password set for printer is entered correctly.

To check the password specified for the printer, display it using the operation panel of the printer or print out the network settings information of the printer.

- Display on the operation panel of the printer.

  ➡ LAN settings

- Print the network settings.

  ➡ Printing Network Settings

Check 6 Check that printer is not placed too far away from device.

If the distance between the printer and the device is too far, wireless communication becomes poor. Place the printer and the device close to each other.

Switching Printer's Connection to Network or Devices

Check the following items when connecting a newly added computer to the LAN environment to the printer, changing the connection method from USB to LAN, or changing the wireless LAN (Wi-Fi) connection method.

- 1. Connects to Another Computer via LAN/Changes from USB to LAN Connection
- 2. Switching LAN Connection Method
- 3. Reconfiguration Method of Wi-Fi Connection

1. Connects to Another Computer via LAN/Changes from USB to LAN Connection



To connect an additional computer to the printer via LAN, or to change from USB to LAN connection, refer to Setup Guide to setup.

2. Switching LAN Connection Method



If you want to switch to USB connection when the printer is used with a LAN connection, refer to Setup Guide to setup.

3. Reconfiguration Method of Wi-Fi Connection



- **If you want to switch to Wireless Direct when using the printer with Wi-Fi connection:**

  Wireless Direct connection is available. Wireless Direct and Wi-Fi connection can be used together. But if you use IEEE802.1X/EAP (WPA/WPA2/WPA3 Enterprise), they can be not used together.

  ➡ Wireless Direct Connection

- **Switching to a Wi-Fi connection when using the printer Wireless Direct:**

  If you connect the printer to your computer or smartphone via a wireless router for the first time to print, or if you want to change the connection frequency between the printer and the wireless router, perform the setup.

  - **For Windows:**

    Refer to Changing the Connection Mode.

- **For macOS:**

  Refer to Setup Guide and redo setup.

Network Key (Password) Unknown

Diagnose and repair the network connections using Wi-Fi Connection Assistant.

Download Wi-Fi Connection Assistant from the below page, and install it on your computer.

➡ Checking Printer Connection Status Using Wi-Fi Connection Assistant

Refer to below in regard to starting up Wi-Fi Connection Assistant.

- **For Windows:**
  - ➡ Starting Up Wi-Fi Connection Assistant
- **For macOS:**
  - ➡ Starting Up Wi-Fi Connection Assistant

If the problem persists after diagnosis and repair with Wi-Fi Connection Assistant, check the following items.

➡ WPA/WPA2/WPA3 Key Set for Wireless Router Unknown, Cannot Connect
➡ Setting an Encryption Key

Q WPA/WPA2/WPA3 Key Set for wireless router Unknown, Cannot Connect

A

Check the wireless router settings. For more on setting up a wireless router, see the instruction manual provided with the wireless router or contact its manufacturer. Make sure your computer can communicate with the wireless router.

Q Setting an Encryption Key

A

Select the encryption containing WPA2.

Note

- The factory default of wireless router supporting WPA3 may be set to WPA3.

Make sure your computer can communicate with the wireless router using the settings you have selected. For more on setting up a wireless router, see the instruction manual provided with the wireless router or contact its manufacturer.

- **Using WPA2/WPA3 (Windows)**

  The authentication method, Wi-Fi password, and dynamic encryption type must be identical among the wireless router, the printer, and your computer.

Enter the Wi-Fi password configured on the wireless router.

AES (secure encryption) is selected automatically as the dynamic encryption method.

For details, see If WPA/WPA2/WPA3 Details Screen Appears.

Note

- For the secure encryption supported by this printer, see "Network Specifications".

  Network Specifications

- To configure IEEE802.1X/EAP (WPA/WPA2/WPA3 Enterprise), you also need to configure the authentication (Radius) server.

  Contact the network administrator for more information.

Checking Wireless Router SSID/Key

The position where the SSID/Key of a wireless router is written differs depending on the manufacturer. For details, refer to your wireless router's instruction manual or visit the manufacturer's website.

Note

- Some wireless routers distinguish network names (SSIDs) by the last alphanumeric character according to their bandwidth (2.4 GHz or 5 GHz), purpose (for computer or game machine) or encryption type.
- To configure IEEE802.1X/EAP (WPA/WPA2/WPA3 Enterprise), you also need to configure the authentication (Radius) server.

  Contact the network administrator for more information.

Cannot Remember Printer's Password

- **If you forgot the administrator password:**

  Select  **Various settings** > **Printer settings** > **Reset settings** > **Reset all**, in order to restore administrator password to default.

  ➡ Reset settings

  After initializing the printer settings, redo setup.

  Refer to Setup Guide and redo setup.

- **If you forgot the security administrator password:**

  It is not possible to change or unset the security policy settings/the security administrator password.

  Contact your nearest Canon service center.

Checking Network Information

- Checking Printer IP Address or MAC Address
- Checking Computer IP Address or MAC Address
- Checking Communication Between the Computer, the Printer, and the Wireless Router
- Checking Network Setting Information

Checking Printer IP Address or MAC Address

To check the printer's IP Address or MAC Address, print out the network settings information or use the operation panel to display it.

- Display on the operation panel.
  - LAN settings
- Print the network settings.
  - Printing Network Settings

For Windows, you can check the network setting information on the computer screen.

- Canon Wi-Fi Connection Assistant Screen

Checking Computer IP Address or MAC Address

To check the IP Address or MAC Address of your computer, follow the instructions below.

- **For Windows:**

  1. Select **Command Prompt** from **Start**.
  2. Enter "ipconfig/all" and press **Enter**.

     The IP Address and MAC Address of your computer appear. If your computer is not connected to a network, the IP Address does not appear.

- **For macOS:**

  1. Select **System Settings** from Apple menu, and then click **Network**.
  2. Make sure network interface used by computer is selected.

     Make sure **Wi-Fi** is **Connected** when connecting via Wi-Fi or **Ethernet** is **Connected** for Wired LAN connection and click.

3. Click **Details** to check the IP Address.

   The IP Address of your computer appears. To check the MAC Address, click **Hardware**.

Checking Communication Between the Computer, the Printer, and the Wireless Router

Perform a ping test to check if communication is taking place.

- **For Windows:**

  1. Select **Command Prompt** from **Start**.

  2. Type "ping XXX.XXX.XXX.XXX" and press **Enter**.

     "XXX.XXX.XXX.XXX" is the IP Address of the target device.

     If communication is taking place, a message like the one shown below appears.

     Reply from XXX.XXX.XXX.XXX: bytes=32 time=10ms TTL=255

     If **Request timed out** appears, communication is not taking place.

- **For macOS:**

  1. Start **Terminal** as shown below.

     Select **Computer** from **Go** menu of Finder, double-click **Macintosh HD** > **Applications** > **Utilities** > **Terminal**.

  2. Type "ping -c3 XXX.XXX.XXX.XXX" and press **Enter**.

     "XXX.XXX.XXX.XXX" is the IP Address of the target device.

     If communication is taking place, a message like the one shown below appears.

     64 bytes from XXX.XXX.XXX.XXX: icmp_seq=0 ttl=64 time=3.394 ms

     64 bytes from XXX.XXX.XXX.XXX: icmp_seq=1 ttl=64 time=1.786 ms

     64 bytes from XXX.XXX.XXX.XXX: icmp_seq=2 ttl=64 time=1.739 ms

     --- XXX.XXX.XXX.XXX ping statistics ---

     3 packets transmitted, 3 packets received, 0% packet loss

     If the following message is displayed, communication is not working properly.

     PING XXX.XXX.XXX.XXX (XXX.XXX.XXX.XXX) : 56 data bytes

     ---XXX.XXX.XXX.XXX ping statistics ---

     3 packets transmitted, 0 packets received, 100% packet loss

Checking Network Setting Information

To check the printer's network settings information, display it using the operation panel of the printer or print it out.

- Display on the operation panel.
  - ➡ LAN settings
- Print the network settings.
  - ➡ Printing Network Settings

Restoring Printer's LAN Settings to Defaults

Important

- Initialization erases all network settings on the printer, making printing/scanning operation from a computer over a network impossible. To use the printer over a network again after restoring it to the factory defaults, refer to "Setup Guide" and redo setup.

Initialize the network setting using the printer's operation panel.

➡ Reset settings

Cannot Connect Smartphone/Tablet to Wireless Router

Check Is the Wi-Fi antenna displayed on your smartphone/tablet?

- **Example (iOS device):**

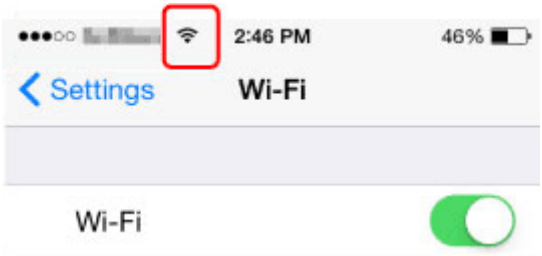

- **Example (Android device):**

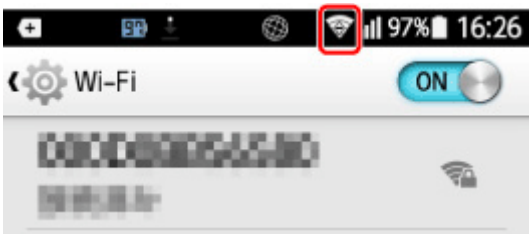

If the antenna is not displayed, your device's wireless function is disabled. Enable Wi-Fi on your device and connect it to a wireless router. For more on the procedure, refer to your device's instruction manual or visit the manufacturer's website.

Note

- The setup on your smartphone/tablet will be easier when you complete setting up a wireless printer connection on your computer in advance.

Checking Wireless Router Network Name (SSID) for Smartphone/ Tablet

Check it from the setting screen of your smartphone/tablet.

- **Example (iOS device):**

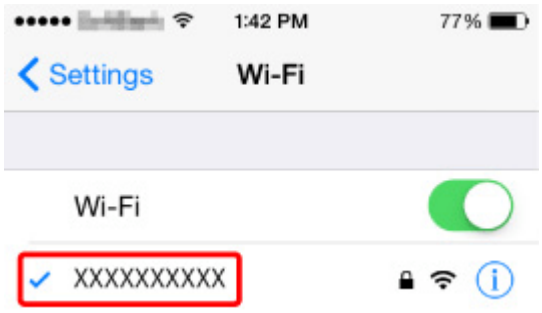

- **Example (Android device):**

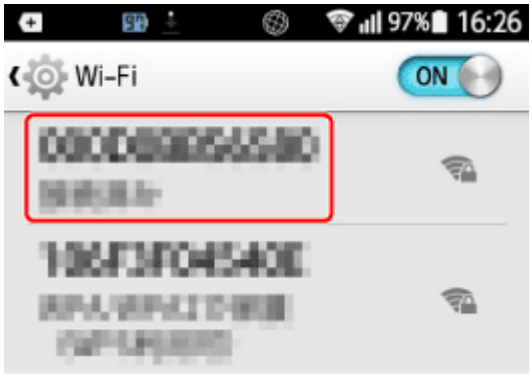

For details on how to display the setting screen, refer to your device's instruction manual or visit the manufacturer's website.

Important

- Perform setup for your printer and smartphone/tablet so that they can connect to the same wireless router.

Printer Problems

- Printer Does Not Turn On
- Printer Turns Off Unexpectedly or Repeatedly
- USB Connection Problems
- LCD Is Off
- Print Head Holder Does Not Move to Replacement Position
- Printer Status Monitor Not Displayed (Windows)
- Updating Printer Firmware

Printer Does Not Turn On

Check 1 Press **ON** button.

➡ Turning the Printer On and Off

Check 2 Make sure power cord is securely connected to printer, and then turn on again.

Check 3 Unplug printer, leave it for at least 5 minutes, and then plug it back in and turn on again.

If this does not solve the problem, contact your nearest Canon service center to request a repair.

Printer Turns Off Unexpectedly or Repeatedly

Check If printer is set to turn off automatically after a certain time, disable this setting.

If you have set the printer to turn off automatically after a specified time, the power will shut off by itself once that time has elapsed.

1. Select  **Various settings** on the HOME screen.
2. Select **Printer settings**.
3. Select **Power control**.
4. Select **Use auto power control**.
5. Select **Auto power off**.
6. Select **Never**

   The setting to shut off the power automatically is disabled.

Note

- If this setting is changed, power consumption may increase.

USB Connection Problems

If the printer connected to the computer via USB is not recognized, check the following items.

➡ USB Connection Not Recognized

The following problems may occur even though the USB connection is recognized.

- Printing is slow.
- Hi-Speed USB connection does not work.
- A message such as "**This device can perform faster**" appears (Windows).

If the above is the case, check the following.

➡ USB Connection Does Not Work Properly

Note

- If your system environment does not support Hi-Speed USB, the printer operates at the slower speed of Full-Speed or Low-Speed. In this case, the printer works properly but printing speed may slow down due to the communication speed.

USB Connection Not Recognized

Check 1 Make sure printer is turned on.

Check 2 Unplug the USB cable from the printer and the computer, and then connect it again.

As the illustration below, the USB port is at the left side of the printer.

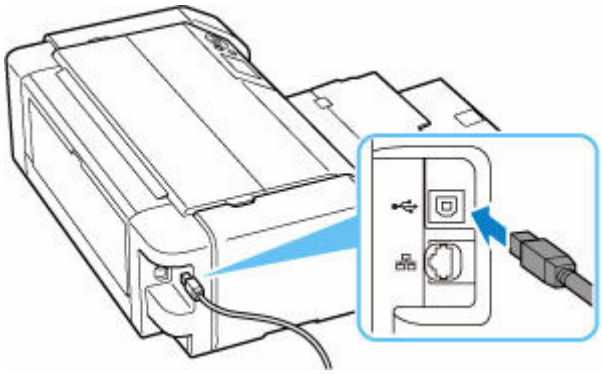

Important

- Check the orientation of the "Type-B" connector and connect to the printer. For details, refer to the instruction manual supplied with the USB cable.

Check 3 Check that **Enable bidirectional support** is selected in **Ports** sheet of **Printer properties** dialog box (Windows).

If not, select it to enable bidirectional support.

➡ Opening Printer Driver's Setup Screen

Check 4 Initialize the printer settings.

Select  on HOME screen > **Various settings** > **Printer settings** > **Reset settings** > **Reset all**.

➡ Reset settings

After initializing the printer settings, redo setup.

Refer to Setup Guide and redo setup.

USB Connection Does Not Work Properly

Check Check following to make sure your system environment supports Hi-Speed USB connection.

- The types of USB cables that can be used differ depending on your printer. Check the shape of the USB cable connection of the printer.

  ➡ What Is USB cable?

- Does the USB port on your computer support Hi-Speed USB connection?
- Does the USB cable or the USB hub support Hi-Speed USB connection?

  Be sure to use a certified Hi-Speed USB cable. We recommend that the USB cable be no longer than 10 feet / 3 meters or so.

- Is the Hi-Speed USB driver working properly on your computer?

  Make sure the latest Hi-Speed USB driver is working properly and install the latest version of the Hi-Speed USB driver for your computer, if necessary.

Important

- For more information, contact the manufacturer of your computer, USB cable, or USB hub.

LCD Is Off

- If **ON** lamp is off:

  The printer is not powered on. Check that the power cord is connected and press the **ON** button.

  ➡ Turning the Printer On and Off

- If **ON** lamp is lit:

  The LCD may be in screen-saver mode. Press any button on the operation panel.

Print Head Holder Does Not Move to Replacement Position

Check1 Is **ON** lamp off?

Check if the **ON** lamp is lit.

The print head holder will not move unless the power is on. If the **ON** lamp is off, close the top cover and turn the printer on.

The **ON** lamp flashes while the printer is initializing. Wait until the **ON** lamp stops flashing and remains lit, open the top cover again, then press the **Stop** button.

Check2 Is an error message displayed on LCD?

Close the top cover, follow the support code (error number) displayed in the error message to resolve the error, and then reopen it. For details on resolving the error, see List of Support Code for Error.

Check3 Has top cover been left open for 10 minutes or longer?

If the top cover is left open for more than 10 minutes, the print head holder moves to the position to protect it to prevent the print head from drying out. Close and reopen the top cover, then press the **Stop** button to return the print head holder to the position for replacing.

Check4 Has printer been printing continuously for a long period?

Close the top cover, reopen it after a while, then press the **Stop** button.

If the printer has been printing continuously for a long time, the print head holder may not move to the position for replacing since the print head may overheat.

Printer Status Monitor Not Displayed (Windows)

Check 1 Is printer status monitor enabled?

Make sure that **Enable Status Monitor** is selected on the **Option** menu of the printer status monitor.

1. Open the Printer Driver **Printing Preferences** window.

   ➡ Opening Printer Driver's Setup Screen

2. On **Maintenance** sheet, click **View Printer Status**.

3. Select **Enable Status Monitor** on **Option** menu if it is not selected.

Check 2 Make sure that all **Windows Updates** have been applied.

If all **Windows Update** have not been applied, the printer status monitor screen will not be displayed. Apply all **Windows Update**.

Updating Printer Firmware

Refer to below on how to update the firmware.

➡ Firmware update

Installation and Download Problems

- Failed to Printer Driver Installation (Windows)
- Updating Printer Drivers in Network Environment (Windows)
- Disable Function to Send Usage Information of Printer
- Setup Application Asks for the Administrator's Username and Password (Windows)
- Enable Printing from PC/Smartphone/Tablet
- Installing Printer Drivers on PC without Network Connection (Windows)

Failed to Printer Driver Installation (Windows)

If the printer driver were not installed correctly, make sure that all **Windows Update** have been applied. If all **Windows Update** have not been applied, apply all **Windows Update**.

After confirming **Windows Update**, perform the following operations to install the printer driver.

1. Open screen to uninstall printer Driver.

   For Windows 11:

   Select **Settings** > **Apps**.

   Select **Apps & features**.

   For Windows 10:

   Select **Settings** > **Apps**.

2. Check if there is "**Canon XXX series Driver**" or "**Canon XXX series Printer Driver**" you want to install in list.

   "XXX" is the model name.

3. If you find printer driver for printer you want to install, uninstall it.

   If not found, proceed to the next step.

4. Restart computer.

   After restarting, install the latest printer driver.

   Important

   - For Windows:

     To restart your computer, choose **Restart** instead of **Shut down**.

Updating Printer Drivers in Network Environment (Windows)

Download the latest printer driver in advance.

Download the latest printer driver for your model on the download page of the Canon website.

After the download is completed, overwrite and install the new version of the printer driver according to the specified installation procedure.

Note

- The network settings on the printer are not affected, so the printer can be used on the network without redoing settings.

Disable Function to Send Usage Information of Printer

The function to send usage information of the printer is configured or controlled by the printer, computer, and smartphone/tablet separately. Disable the function from each device as well as the printer.

Important

- Make sure each device is connected to Internet before disabling the function to send usage information.
- In some case, it may take time for your choice to be reflected in your printer.

- For Windows:
- For macOS:
- For Smartphone/Tablet App :

For Windows:

Perform setup procedure to change the setting for sending information of the printer.

1. Make sure computer to change setting is connected to Internet.
2. Start setup procedure.
   - Set Up
3. Click **Setting Up Your New Printer** on **Start Setup** screen.

   Proceed the setup procedure according to the instructions on the screen until the **For using services related to Canon product** license agreement screen appears.
4. Click **Do not agree** on **For using services related to Canon product** license agreement screen.

   The warning screen appears.
5. Click **OK** on displayed screen.
6. Proceed setup procedure to the end according to instructions on screen.
7. If **For using services related to Canon product** license agreement screen appears again after a certain period of time, click **Do not agree**.

Note

- Depending on your operating environment, it may take time for the license agreement screen to appear.
- Do not turn off the printer until the license agreement screen appears again.

For macOS:

Perform setup procedure to change the setting for sending information of the printer and macOS.

1. Start setup procedure.

   ➡ Set Up

2. Click **Setting Up Your New Printer** on **Start Setup** screen.

   Proceed the setup procedure according to the instructions on the screen until the **For using services related to Canon product** license agreement screen appears.

3. Click **Do not agree** on **For using services related to Canon product** license agreement screen.

   The warning screen appears.

4. Click **OK** on displayed screen.

5. Proceed setup procedure to the end according to instructions on screen.

6. If **For using services related to Canon product** license agreement screen appears again after a certain period of time, click **Do not agree**.

Note

- Depending on your operating environment, it may take time for the license agreement screen to appear.
- Do not turn off the printer until the license agreement screen appears again.

For Smartphone/Tablet App :

Use the App to change the setting for sending information of the printer and smartphone/tablet.

1. Check that printer is turned on.

2. Start up the App.

3. Tap Menu on lower right.

4. Tap **About**.

5. Tap **Settings for Data Sending**.

   The **Settings for Data Sending** screen appears.

6. Check displayed message, unselect **Agree** of the items you want to stop sending and tap **OK**.

   If you have not selected the first item from the top, warning screen appears and tap **OK**.

   The function to send usage information from the App is disabled.

   Select **Agree** to enable the function to send usage information of each item and tap **OK**.

   Next, disable the function to send usage information from the printer.

7. Tap Home on lower left.

   Make sure the printer to change the setting is selected.

8. Tap printer icon.

9. Tap **Settings for Data Sending**.

   The **Settings for Data Sending** screen appears.

10. Check displayed message, unselect **Agree** of the items you want to stop sending and tap **OK**.

    If you have not selected the first item from the top, warning screen appears and tap **OK**.

    The function to send usage information from the printer is disabled

    Select **Agree** to enable the function to send usage information of each item and tap **OK**.

Note

- Do not turn off the printer until you finish changing the setting on your smartphone/tablet.
- If multiple devices are connected to the printer, you need to disable the function to send usage information on all devices. If the function is enabled on one of the devices, sending usage information will continue.

Setup Application Asks for the Administrator's Username and Password (Windows)

Check Enter the username and password of the local administrator account.

When you install or launch the printer setup application on your PC, you may be asked to enter the administrator's username and password. In such cases, enter the username and password of the local administrator account, and not your current username and password.

If you do not have this information, contact the administrator of your PC.

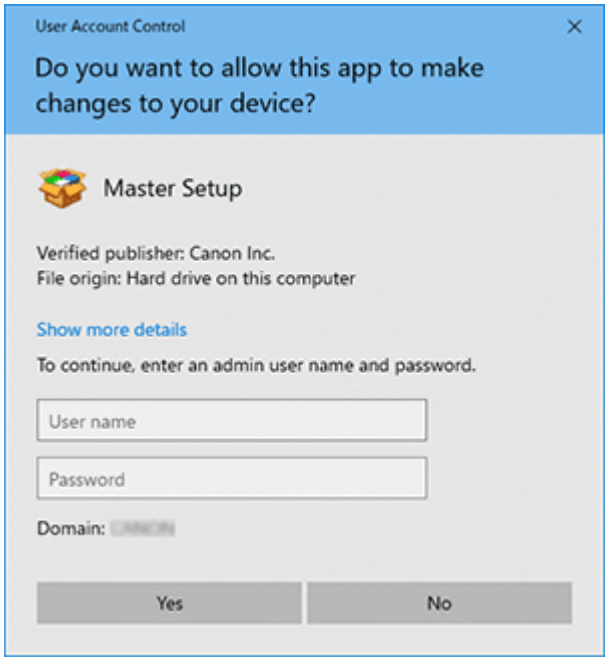

Enable Printing from PC/Smartphone/Tablet

Check Run the setup software on the device on which you want to enable printing.

If the printer and the router are already connected and you need to connect new PC/smartphone/tablet to the printer, run the setup software on the device on which you want to enable printing.



Access the following link on the device on which you want to enable printing.

- **For Windows:**

  ➡ Connecting to a Computer

- **For macOS:**

  ➡ Connecting to a Computer

- **For smartphone/tablet:**

  ➡ Connecting to a Smartphone

Installing Printer Drivers on PC without Network Connection (Windows)

Check Install printer driver with a USB flash drive or SD card (removable media).

Using another PC with a network connection, download printer driver for your model to a USB flash drive, SD card, or other removable media.

After downloading it, move the data to the PC without a network connection and install it following the instructions.

Printing Problems

- Printer Does Not Print
- Printing Stops
- Cannot Print on the Disc Label
- Default Printer Keeps Changing (Windows)
- Change to Offline (Windows)/Cannot Communicate (Windows)
- No Ink Level Appears in Canon IJ Status Monitor (Windows)

Printer Does Not Print

Check 1 Make sure printer is turned on.

If not, make sure the printer is securely plugged in and press **ON** button to turn on.

Check 2 Make sure printer is properly connected to computer.

If you are using a USB cable, make sure it is securely connected to both the printer and the computer. When the USB cable is securely plugged in, check the following:

- If you are using a relay device such as a USB hub, disconnect it, connect the printer directly to the computer, and retry the printing. If printing starts normally, there is a problem with the relay device. Contact the vendor of the relay device.
- There could also be a problem with the USB cable. Replace the USB cable and retry the printing.

If you use the printer with a network connection, make sure the printer is correctly set up for network use.

➡ Cannot Find Printer on Network (Windows/macOS)

Note

- Wi-Fi Connection Assistant allows you to diagnose and repair the network status.

  Select the link below to download Wi-Fi Connection Assistant and install it.

  ➡ Checking Printer Connection Status Using Wi-Fi Connection Assistant

  Refer to below in regard to starting up Wi-Fi Connection Assistant.

  - **For Windows:**

    ➡ Starting Up Wi-Fi Connection Assistant

  - **For macOS:**

    ➡ Starting Up Wi-Fi Connection Assistant

Check 3 Make sure paper settings match information set for top feed or manual feed tray.

If the paper settings do not match the information set for the top feed or manual feed tray, an error message appears on the operation panel. Follow the instructions on the operation panel to solve the problem.

Note

- You can select whether the message which prevents misprinting is displayed.
  - To change the message view setting when printing using the printer's operation panel:

    ➡ Paper-related settings

  - To change the message view setting when printing using the Printer Driver:

➡ Changing the Printer Operation Mode (Windows)
➡ Changing the Printer Operation Mode (macOS)

Check 4 If printing from a computer, delete unnecessary print jobs.

- **For Windows:**

  ➡ Deleting the Undesired Print Job

- **For macOS:**

  ➡ Deleting the Undesired Print Job

Check 5 Make sure that the multi-purpose tray guide is closed.

If the multi-purpose tray guide is opened, close it.

Check 6 Is manual feed tray in paper feed position?

If the manual feed tray is in the paper jam clearing position, return the tray to the paper feed position and press the **OK** button on the printer.

Check 7 Are media type and paper size specified properly in the printer driver?

When the media type is specified to **Photo Paper Pro Premium Matte**, **Premium Fine Art Smooth**, **Premium Fine Art Rough**, or **Matte Photo Paper** in the printer driver, specify a paper size from the following size that has wide margins.

- **A4 (Margin 25)**
- **Letter (Margin 25)/US Letter (Margin 25)**
- **A3 (Margin 25)**
- **A3+ (Margin 25)**
- **210x594mm (Margin 25)**
- **11"x17" (Margin 25)/Tabloid Margin 25**

Important

- By canceling the safety margin regulation with the following method, you can print with normal paper size.
  - For Windows:

    Click **Print Options** on **Page Setup** sheet of the printer driver. Then select **Cancel the safety margin regulation for paper size** check box in the dialog that appears.
  - For macOS:

    Select **Cancel Margin Regulation** check box in **Advanced Paper Settings** in the Print dialog.

  If you print with normal paper size, conditions such as paper abrasion may cause paper stains or deterioration of print quality depending on the environment. We recommend that you print with a paper size that has wide margins.

Check 8 Are your printer's Printer Driver selected when printing?

The printer will not print properly if you are using a printer driver for a different printer.

- **For Windows:**

  Make sure "Canon XXX series" (where "XXX" is your printer's name) is selected in the Print dialog box.

  Note

  - If multiple printers are registered to your computer, set your printer as **Let Windows manage my default printer** so that it is selected by default.

    Default Printer Keeps Changing (Windows)

- **For macOS:**

  Make sure your printer's name is selected in **Printer** in the Print dialog.

  Note

  - If multiple printers are registered to your computer, select **Set as Default Printer** from **System Settings** > **Printers & Scanners** for a printer to make the one selected by default.

Check 9 Are you trying to print a large data file? (Windows)

If you are trying to print a large data file, it takes a long time to start printing.

If the printer does not start printing after a certain period of time, select **On** for **Prevention of Print Data Loss** on the **Print Options** dialog box.

For details, refer to Page Setup Tab Description.

Important

- Selecting **On** for **Prevention of Print Data Loss** may reduce print quality.
- After printing is completed, select **Off** for **Prevention of Print Data Loss**.

Check 10 If printing from your computer, restart the computer.

Restart the computer and try printing again.

Important

- For Windows:

  To restart your computer, choose **Restart** instead of **Shut down**.

Printing Stops

Check 1 Is paper loaded?

Make sure paper is loaded.

If necessary, load paper.

Check 2 Do documents to be printed have many photographs or illustrations?

It takes time for the printer and the computer to process large data such as photos or other graphics, so it may seem that the printer is not working.

Also, if you are printing data that requires a lot of ink on successive sheets of plain paper, the printer may pause temporarily. In either case, wait until the process is complete.

Note

- If you are printing a document with a large printing area or printing several copies, printing may pause to allow the ink to dry.

Check 3 Has printer been printing continuously for a long period?

If the printer has been printing continuously for a long time, the print head or other parts around it may overheat. The printer may stop printing at a line break for a period of time and then resume printing.

In this case, wait a while without doing anything. If the printing does not resume, turn the printer off. After waiting for a while, turn on the printer, and check whether printing is possible.

Caution

- Print head and surrounding area in the printer can become extremely hot. Never touch print head or nearby components.

Cannot Print on the Disc Label

➡Disc Label Printing Does Not Start

➡Multi-Purpose Tray Does Not Feed Properly

➡Multi-Purpose Tray Jammed

Q Disc Label Printing Does Not Start

A

Check1 Is multi-purpose tray placed properly?

Place the multi-purpose tray properly again and select **OK** on the LCD.

Use the multi-purpose tray (marked A) supplied with this printer.

For more on placing the multi-purpose tray, see Placing/Removing a Printable Disc.

Check2 Is printable disc placed on multi-purpose tray?

Place the printable disc on the multi-purpose tray properly and select **OK** on the LCD.

Use the multi-purpose tray (marked A) supplied with this printer.

For more on placing the multi-purpose tray, see Placing/Removing a Printable Disc.

Check3 Has time elapsed since you placed the multi-purpose tray?

If a certain period of time has elapsed since you placed the multi-purpose tray, it may be ejected.

Follow the instructions on the LCD and try the operation again.

Q Multi-Purpose Tray Does Not Feed Properly

A

Check1 Is multi-purpose tray placed properly?

Place the multi-purpose tray properly again and select **OK** on the LCD.

Use the multi-purpose tray (marked A) supplied with this printer.

For more on placing the multi-purpose tray, see Placing/Removing a Printable Disc.

Check2 Unrecognizable printable disc may be placed.

Canon recommends that you use printable discs specially processed to be printed on by an inkjet printer.

Multi-Purpose Tray Jammed

Pull out the multi-purpose tray gently.

If the multi-purpose tray cannot be pulled out, cycle the power switch. The multi-purpose tray will automatically be ejected.

When the multi-purpose tray is pulled out, place the multi-purpose tray (marked A) again and retry printing. For more on placing the multi-purpose tray, see Placing/Removing a Printable Disc.

If the multi-purpose tray is still jammed, check if there is a problem with the printable disc.

➡Multi-Purpose Tray Does Not Feed Properly

Default Printer Keeps Changing (Windows)

From Windows 10, the management method of the printer that is normally used has changed. Check the following items for your Windows.

- For Windows 11:
- For Windows 10:

For Windows 11:

From **Settings** in the **Start** menu, change the setting of the printer you normally use.

1. Open Set Printers & scanners.
2. Turn off **Let Windows manage my default printer**.
3. Click the name of printer you normally want to use.
4. Click **Set as default** displayed at top of window.

   When the printer is set as default, the **Default** is appeared.

For Windows 10:

From **Settings** in the **Start** menu, change the setting of the printer you normally use.

1. Open Set Printers & scanners.
2. Remove the check mark from **Let Windows manage my default printer**.
3. Click the name of printer you normally want to use.
4. Click **Manage**.
5. Select **Set as default**.

   When the printer is set as default, the **Default** is appeared.

Change to Offline (Windows)/Cannot Communicate (Windows)

If the printer cannot communicate with the computer, an error message "Offline" may be displayed when printing. To bring the printer back online, try the following.

1. Check the connection (USB/Wi-Fi).

   For USB connection:

   Make sure that the USB-connected printer is recognized by the computer.

   For Wi-Fi connections:

   Make sure that  appears on the printer's LCD.

2. Turn off printer and then turn it on again.

   Confirm that the offline mode has been disabled. If the printer is still offline, proceed to the next step.

3. Check the name of the printer driver.

   Check the names of the printer and printer driver match. Set the using printer as default.

   ➡ Default Printer Keeps Changing (Windows)

   Confirm that the offline mode has been disabled. If the printer is still offline, proceed to the next step.

4. Make sure that printer is not set to **Use Printer Offline** mode.

   For Windows 11:

   1. Open Set Printers & scanners.
   2. Click the name of printer you want to configure.
   3. Click **Printing preferences**.

      Printing preferences window opens.
   4. Click **Maintenance** sheet.
   5. Click **View Printer Status**.

      The Canon IJ Status Monitor window is displayed.
   6. Click **Display Print Queue** of the Canon IJ Status Monitor window.

The Print Queue window is displayed.

7. Click **Printer** menu in the window displayed.

   Make sure **Use Printer Offline** is not selected.

   If it is selected, click **Use Printer Offline** to deselect it.

Confirm that the offline mode has been disabled. If the printer is still offline, proceed to the next step.

For Windows 10:

1. Open Set Printers & scanners.

2. Click the name of printer you want to configure, and select **Open queue**.

   The Print Queue window is displayed.

3. Click **Printer** menu in the window displayed.

   Make sure **Use Printer Offline** is not selected.

   If it is selected, click **Use Printer Offline** to deselect it.

Confirm that the offline mode has been disabled. If the printer is still offline, proceed to the next step.

5. For Wi-Fi connections, use Wi-Fi Connection Assistant to change settings.

Diagnose and repair the network connections using Wi-Fi Connection Assistant.

Download Wi-Fi Connection Assistant from the below page, and install it on your computer.

➡ Checking Printer Connection Status Using Wi-Fi Connection Assistant

Refer to below in regard to starting up Wi-Fi Connection Assistant.

➡ Starting Up Wi-Fi Connection Assistant

Confirm that the offline mode has been disabled. If the printer is still offline, proceed to the next step.

6. Uninstall printer driver and reinstall printer driver.

If your printer driver version is old or not installed correctly, you may not be able to print.

Confirm that the offline mode has been disabled. If the printer is still offline, proceed to the next step.

7. Restart computer.

The computer may be unstable for some reason. Restart the computer and try to print.

Important

- To restart your computer, choose **Restart** instead of **Shut down**.

No Ink Level Appears in Canon IJ Status Monitor (Windows)

Use the Printer Driver with bidirectional communication.

Select **Enable bidirectional support** in the **Ports** sheet of the properties dialog box of the printer driver.

➡ Opening Printer Driver's Setup Screen

Paper is not Fed or Ejected Properly

- What to Do When Paper Is Jammed
- Printer Does Not Pick up or Feed the Paper/"No Paper" Error
- Paper Does Not Feed from Paper Source Specified in Printer Driver (Windows)
- What to Do If Paper Is Not Fed/Output Normally

What to Do When Paper Is Jammed

If paper jams, remove it following the appropriate procedure as shown below.

Note

- If the paper is not jammed (no support code displayed) but the paper is not fed or output normally, see What to Do If Paper Is Not Fed/Output Normally.

- If the paper loaded in the top feed is jammed:
- If the paper loaded in the manual feed tray is jammed:
- If the paper is jammed inside the printer:
- If the small size paper is jammed inside the printer:

If the paper loaded in the top feed is jammed:

1. Slowly pull out paper, either from paper output slot or from top feed, whichever is easier.

   Hold the paper with your hands and pull the paper out slowly not to tear it.

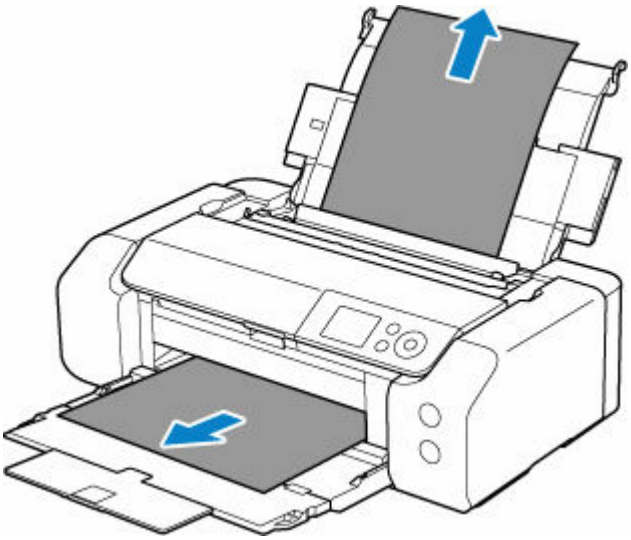

Note

- If you cannot pull out the paper, turn the printer back on. The paper may be ejected automatically.
- If paper becomes jammed during printing and you need to turn off the printer to remove it, press the **Stop** button to stop the printing before you turn off the printer.
- If the paper tears and you cannot remove the jammed paper from the paper output slot or the top feed, remove the paper from inside the printer.

  If the paper is jammed inside the printer

2. Reload paper and press printer's **OK** button.

   The printer resumes printing. Reprint the page you were printing if it was not printed properly due to the paper jam.

If you turned off the printer in step 1, the print data that was sent to the printer is erased. Redo the printing.

Note

- When reloading the paper, make sure you are using suitable paper and loading it correctly.
- We recommend using paper sizes other than A5 to print documents with photos or graphics. A5 paper may curl and jam as it leaves the printer.

If the measures above do not solve the problem, contact your Canon dealer for assistance.

If the paper loaded in the manual feed tray is jammed:

1. Press **Paper Jam Clearing** button and set manual feed tray to paper jam clearing position.

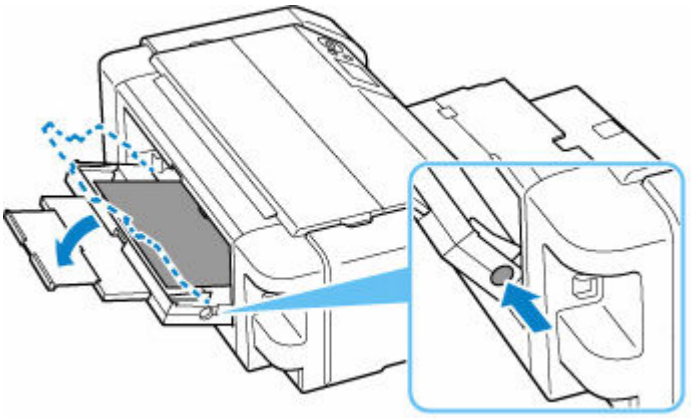

2. Slowly pull out paper, either from paper output slot or from manual feed tray, whichever is easier.

   Hold the paper with your hands and pull the paper out slowly not to tear it.

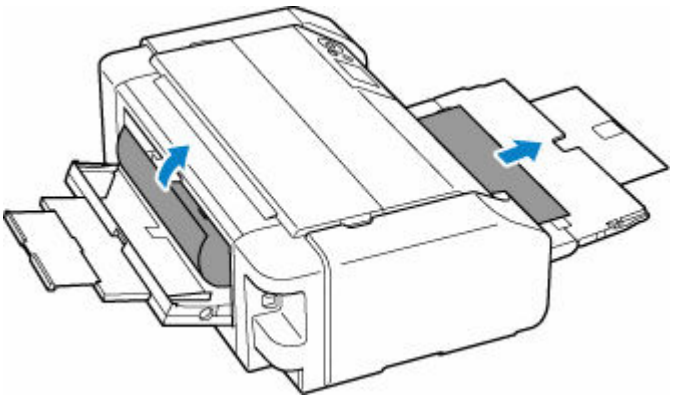

Note

- If you cannot pull out the paper, turn the printer back on. The paper may be ejected automatically.
- If paper becomes jammed during printing and you need to turn off the printer to remove it, press the **Stop** button to stop the printing before you turn off the printer.

- If the paper tears and you cannot remove the jammed paper from the paper output slot or the manual feed tray, remove the paper from inside the printer.

  ➡ If the paper is jammed inside the printer

3. Return manual feed tray to original position.

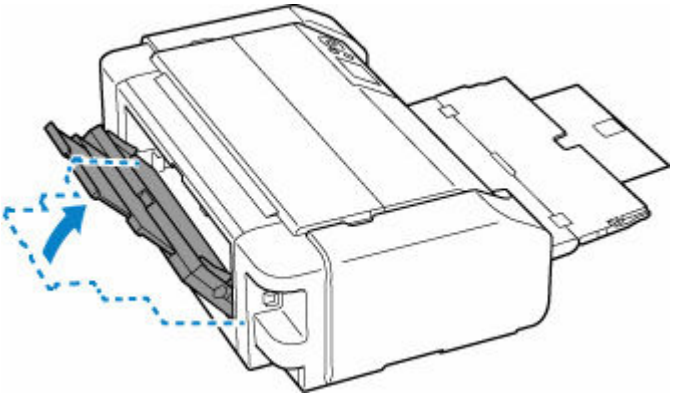

4. Reload paper and press printer's **OK** button.

   The printer resumes printing. Reprint the page you were printing if it was not printed properly due to the paper jam.

   If you turned off the printer in step 2, the print data that was sent to the printer is erased. Redo the printing.

Note

- When reloading the paper, make sure you are using suitable paper and loading it correctly.

If the measures above do not solve the problem, contact your Canon dealer for assistance.

If the paper is jammed inside the printer:

If the jammed paper tears and you cannot remove the paper either from the paper output slot, from the top feed, or from the manual feed tray, or if the jammed paper remains inside the printer, remove the paper following the instructions below.

Note

- If paper becomes jammed during printing and you need to turn off the printer to remove it, press the **Stop** button to stop the printing before you turn off the printer.

1. Turn off printer and unplug it.

2. Open top cover and multi-purpose tray guide.

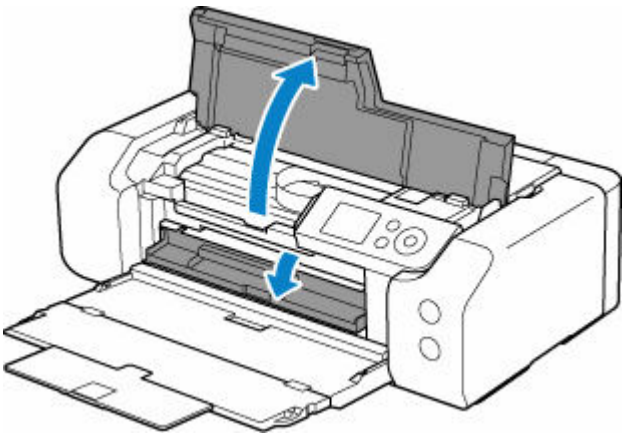

Important

- Do not touch clear film (A) or white belt (B).

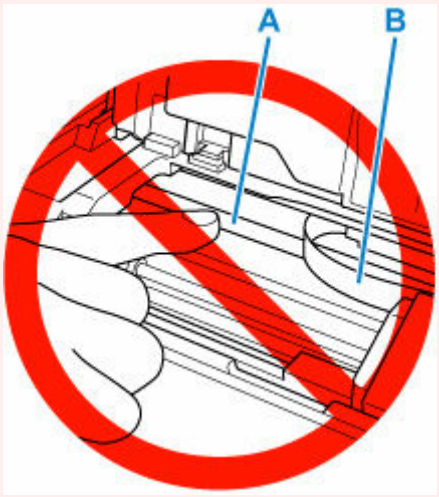

If you soil or scratch these parts by touching them with paper or your hand, it could damage the printer.

3. Check if jammed paper is under print head holder.

If the jammed paper is under the print head holder, move the print head holder to the far right or left, whichever makes it easier to remove the paper.

When moving the print head holder, hold the top of the print head holder and slide it slowly to the far right or left.

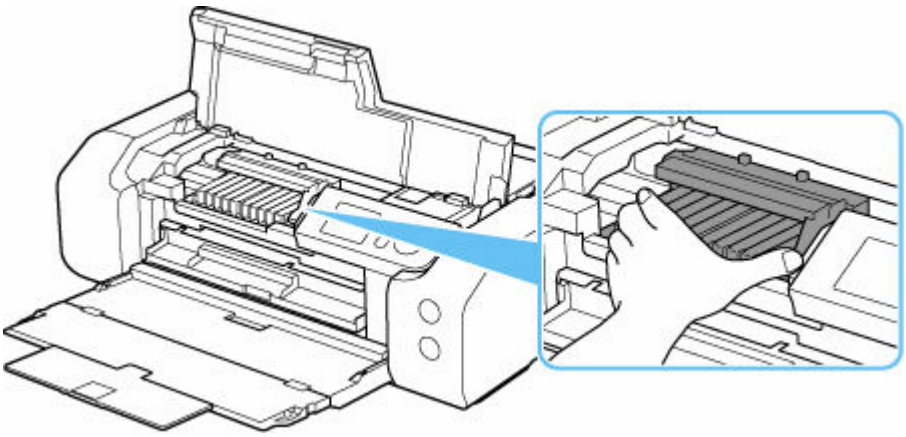

4. Hold jammed paper firmly in both hands.

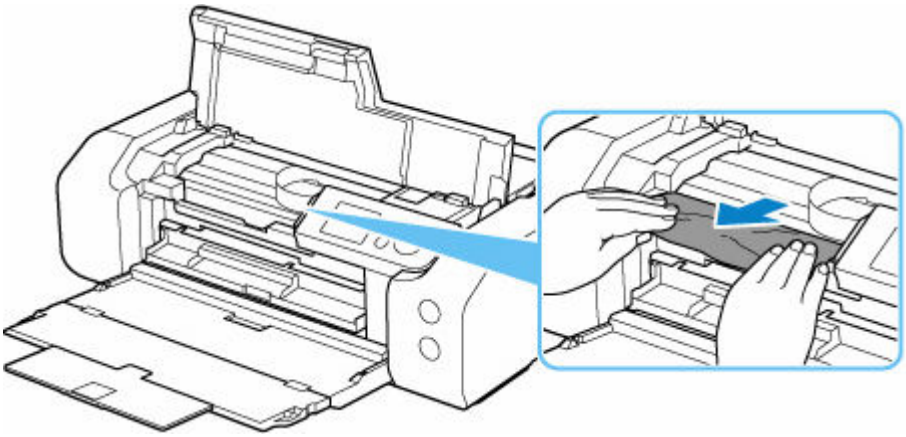

If the paper is rolled up, pull out it.

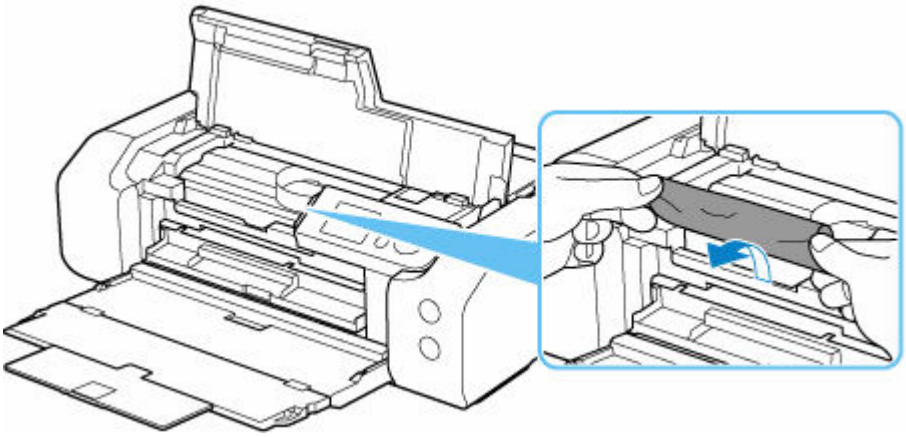

5. Slowly pull out paper, so as not to tear it.

Pull out the paper at an angle of about 45 degrees.

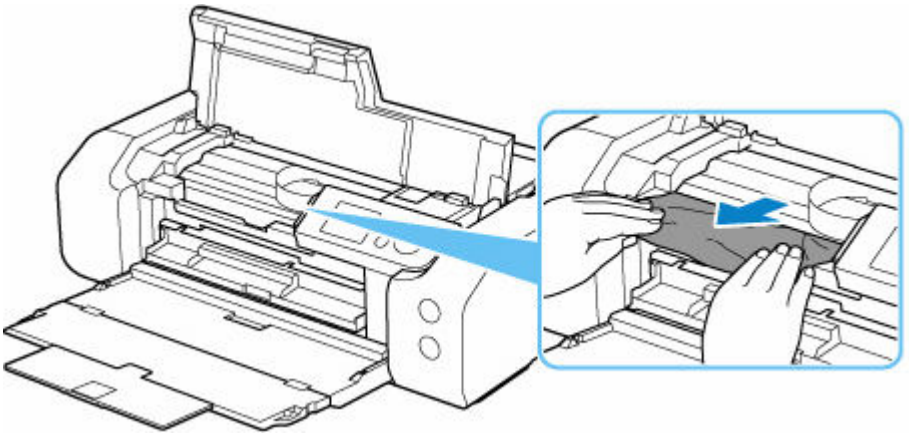

6. Make sure all jammed paper is removed.

   If the paper tears when you pull out it, a bit of paper may remain in the printer. Check the following and remove any remaining paper.

   - Any paper left under the print head holder?
   - Any small bits of paper left in the printer?
   - Any paper left in the left and right empty spaces (C) in the printer?

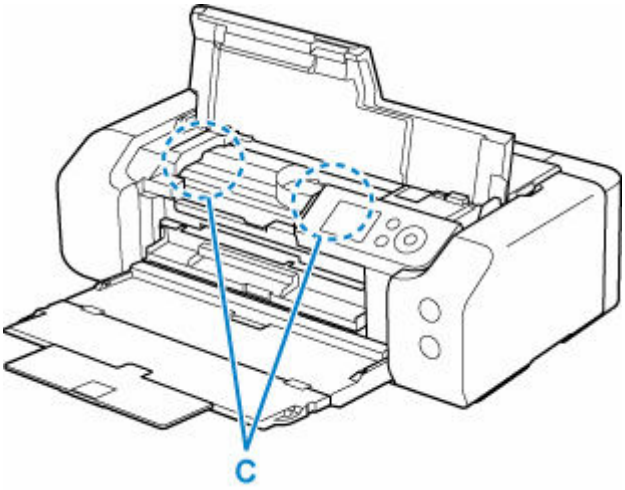

7. Close top cover and multi-purpose tray guide.

   All jobs in the print queue are canceled. Redo the printing.

   Note

   - When reloading the paper, make sure you are using suitable paper and loading it correctly. If a paper jam message appears on the LCD or on your computer screen when you resume printing after removing all the jammed paper, there may be some paper still inside the printer. Check the printer again for any remaining bits of paper.

If the measures above do not solve the problem, contact your Canon dealer for assistance.

If the small size paper is jammed inside the printer:

Important

- Do not load the small size paper such as **4"x6" 10x15cm** size paper in the landscape orientation. It may cause a paper jam.

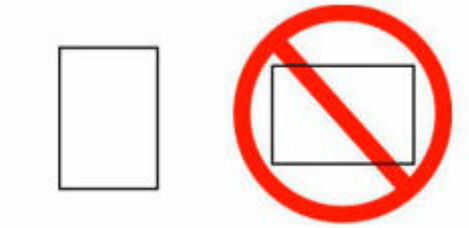

- You cannot print on paper smaller than the minimum size.

➡ Media Types You Can Use

If the small size paper is jammed inside the printer, remove the paper following the instructions below.

1. Load one sheet of paper larger than **4"x6" 10x15cm** in top feed in portrait orientation.

   Align the paper guides of the top feed with both edges of the paper.

   Do not load the small size paper in the landscape orientation.

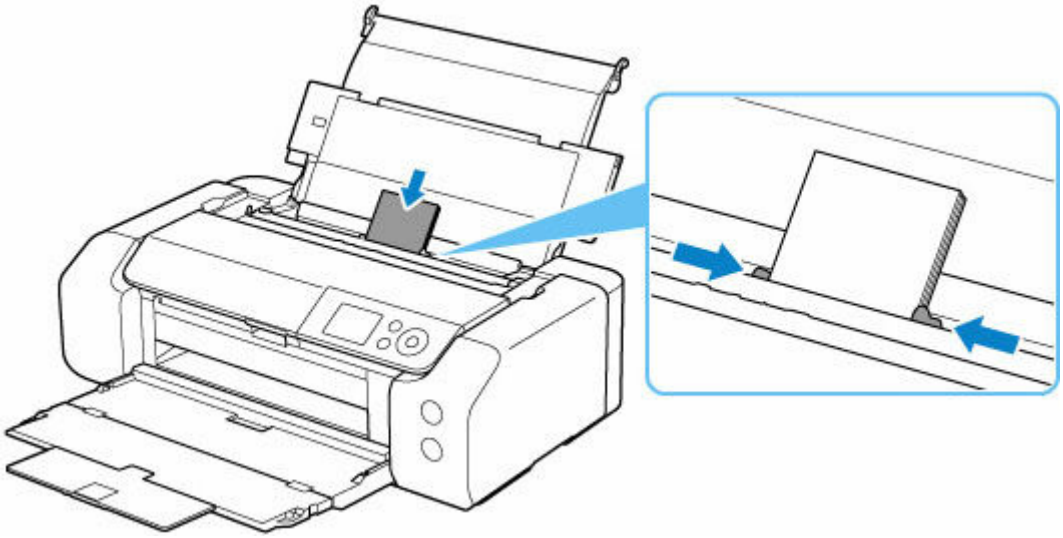

   Close the feed slot cover.

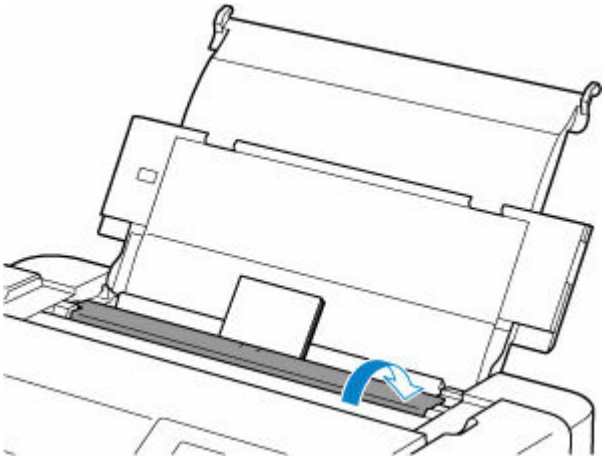

2. Turn off the printer.

3. Turn on the printer.

   The loaded paper is fed and ejected while pushing out the jammed paper.

If the jammed paper is not ejected even after taking the above measures, try the following procedure.

4. Perform paper feed roller cleaning of the manual feed tray.

   ➡ Cleaning Paper Feed Rollers

   The jammed paper is ejected together with the paper used for paper feed roller cleaning.

   All jobs in the print queue are canceled. Redo the printing.

Note

- When reloading the paper, make sure you are using suitable paper and loading it correctly.

  If a paper jam message appears on the printer's LCD or on your computer screen when you resume printing after removing all the jammed paper, there may be some paper still inside the printer. Check the printer again for any remaining bits of paper.

If the problem persists even after repeating the above measures, contact your Canon dealer for assistance.

Q Printer Does Not Pick up or Feed the Paper/"No Paper" Error

A

Check 1 Make sure paper is loaded.

- Loading Paper in the Top Feed
- Loading Paper in the Manual Feed Tray

Check 2 When loading paper, consider the following.

- When loading two or more sheets of paper, flip through the paper before loading.



- When loading two or more sheets of paper, align the edges of the sheets before loading the paper.
- When loading two or more sheets of paper, make sure the paper stack does not exceed the paper load limit.

  However, paper may not feed correctly at the maximum capacity, depending on the type of paper or environmental conditions (very high or low temperature and humidity). In such cases, reduce the amount of paper you load at a time to less than half of the paper load limit.
- Always load the paper in portrait orientation, regardless of the printing orientation.

In the manual feed tray:

When you load the paper, load one sheet at a time. When you print continuously, set the next paper after the last one is finished printing.

Check 3 Is paper too thick or curled?

- Media Types You Can Use

Check 4 When loading postcards, consider the following:

- If a postcard is curled, it may not feed properly even though the paper stack does not exceed the paper load limit.

  Load Japanese postcards with their postcode column downward.

Check 5 Check paper source setting.

- Switching the Paper Source to Match the Purpose (Windows)
- Switching the Paper Source to Match the Purpose (macOS)

Check 6 Make sure paper weight is suitable for use with printer.

➡ Media Types You Can Use

Check 7 Make sure there are not any foreign objects in top feed or manual feed tray.

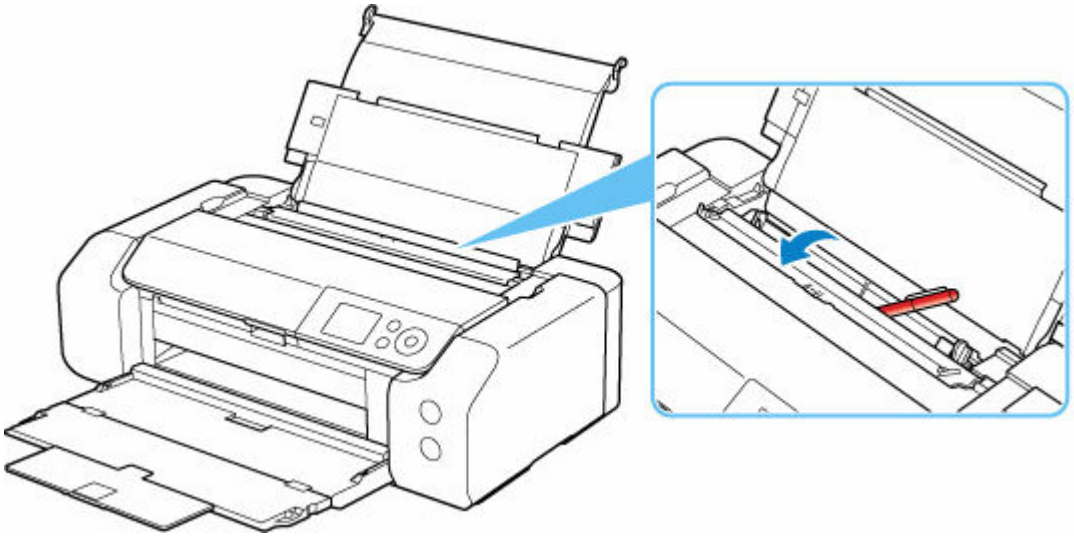

If the paper tears in the top feed or the manual feed tray, see What to Do When Paper Is Jammed to remove it.

If there are any foreign objects in the top feed or manual feed tray, be sure to turn off the printer, unplug it and remove the foreign object.

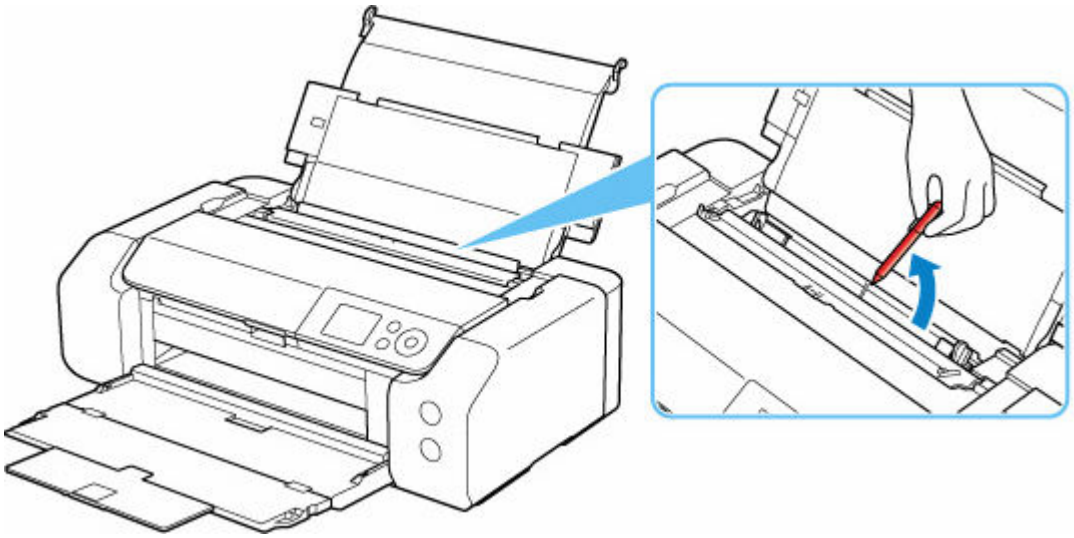

Note

- If the feed slot cover is opened, close it slowly.

Check 8 Clean paper feed roller.

➡ Cleaning Paper Feed Rollers

Note

- Cleaning the paper feed roller abrades it, so do this only when necessary.

If the measures above do not solve the problem, contact your Canon dealer for assistance.

Paper Does Not Feed from Paper Source Specified in Printer Driver (Windows)

Check Is paper source setting inconsistent between application program and Printer Driver?

Change the application software setting corresponding to the Printer Driver setting, or click **Print Options** on **Page Setup** sheet of the Printer Driver and select **Disable the paper source setting of the application software** on **Print Options** screen.

When the paper source setting is inconsistent between an application program and the Printer Driver, the application software setting takes precedence.

For details, refer to Page Setup Tab Description.

What to Do If Paper Is Not Fed/Output Normally

If the paper is not jammed and the paper is not fed normally, follow the procedure below.

Check 1 Is anything blocking paper output slot?

Check 2 Are there any foreign objects in top feed or manual feed tray?

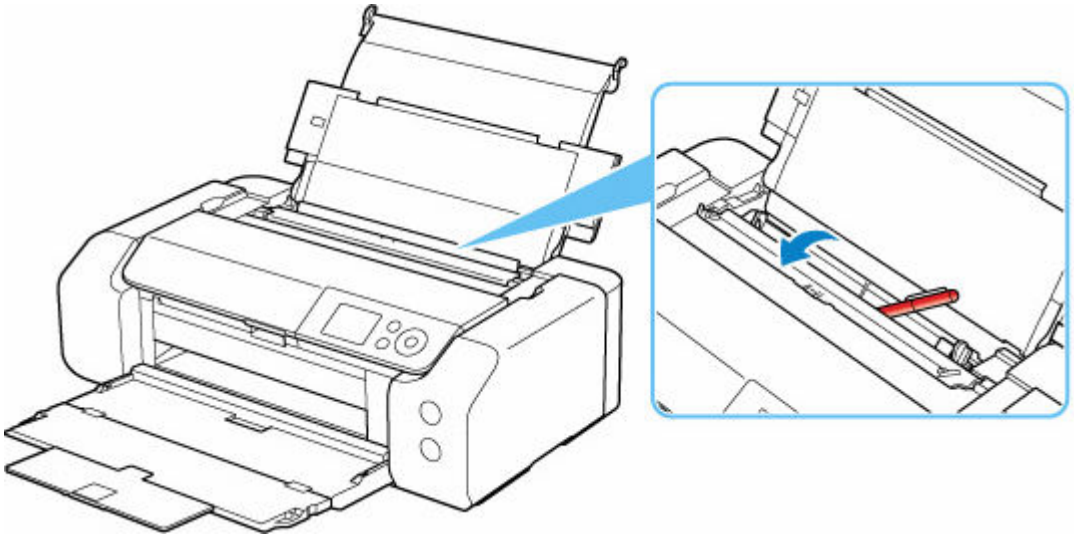

If there are any foreign objects in the top feed or the manual feed tray, be sure to turn off the printer, unplug it, and then remove the foreign object.

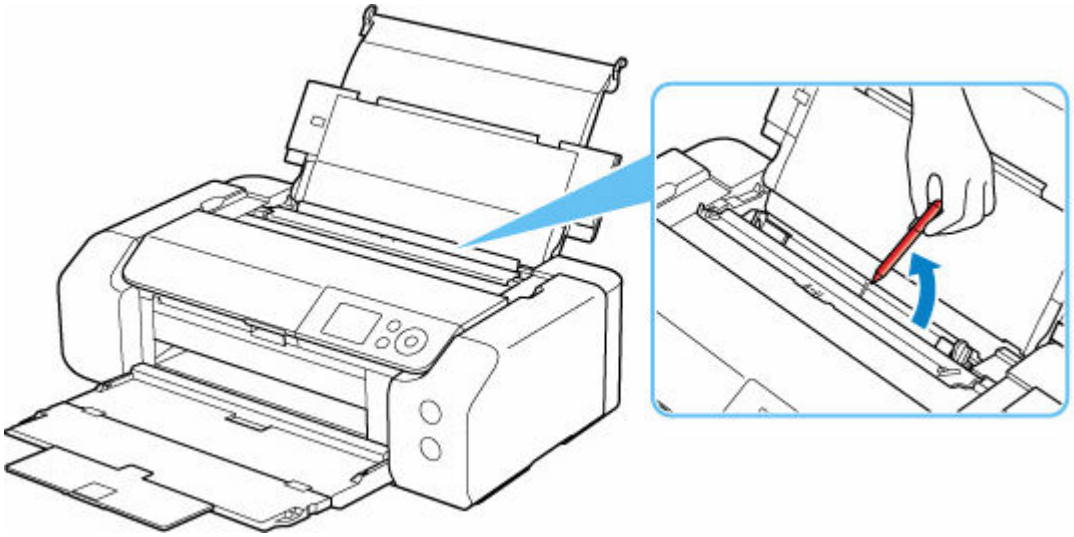

Note

- If the feed slot cover is opened, close it slowly.

Check 3 Is paper curled?

Correct curl before loading paper.

Check 4 Is paper loaded properly?

Always load paper in portrait orientation (A). If you load paper in landscape orientation (B), paper may not be fed or a paper jam may occur.

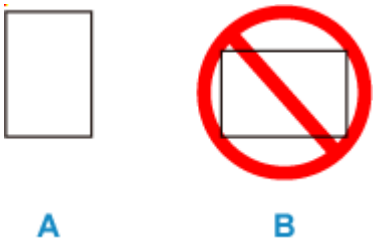

- Loading Paper in the Top Feed
- Loading Paper in the Manual Feed Tray

Paper Setting Problems

- I want to know the paper types that can be used in this printer

I want to know the paper types that can be used in this printer

For information about paper that can be used with this printer, refer to "Media Types You Can Use".

➡ Media Types You Can Use

Ink-related Problems

- Ink Does Not Come Out
- Printer consumes a lot of ink

Ink Does Not Come Out

Check 1 Check the remaining ink level.

- Checking Ink Level

Check 2 Are the print head nozzles clogged?

Print the nozzle check pattern and make sure that the ink is coming out normally.

- Checking for Nozzle Clogging
- Maintenance Procedure

Check 3 Is the correct printer driver selected?

Print again using the correct printer driver for your printer.

If none of the above apply, there may be a printer malfunction.

Contact your Canon dealer for assistance.

Printer consumes a lot of ink

Check 1 Are lots of full-color materials being printed?

In print jobs such as photos, images are filled with color. This consumes a lot of ink. This does not indicate a problem with the printer.

Check 2 You have just finished initial installation, when more ink is consumed to fill the system.

If using the printer for the first time, or using it after transport, the ink tank will supply an initial fill of ink to the Print head.

Although the amount of remaining ink may drop as a result, it does not indicate a problem.

Check 3 Is the Print head nozzle blocked?

Check for nozzle clogging.

- Checking for Nozzle Clogging
- Maintenance Procedure

List of Support Code for Error

Support code appears on the printer's LCD and your computer screen when errors occur.

A "support code" is an error number, and appears along with an error message.

When an error occurs, check the support code and take the appropriate action in response.

Support Code Appears on Printer's LCD and Computer Screen

- **1000 to 1ZZZ**

  1000 1001 1002 1006 1013 1062 1200 1250 1261 1300 1308 1351

  1401 1403 1405 1408 1409 140A 140C 1410 1411 1412 1413 1414

  1415 1416 1417 1418 1419 1500 1551 1552 1570 15A1 15A2 15A3

  1600 1660 1684 168C 1698 1699 1700 1701 1716 1730 1750 1830

  1850 1851 1855 1856 1857

- **2000 to 2ZZZ**

  2103 2114 2115 2500 2503

- **3000 to 3ZZZ**

  3000 3306 3310 3311 3312 3313 3314 3315 3316 3317 3318 3319

  3413 3440 3441 3442 3443 3444 3445 3446 3447 3454 3455

- **4000 to 4ZZZ**

  4103 4104 4109 410E 4111 495A

- **5000 to 5ZZZ**

  5100 5200 520C 520E 5250 5400 5700 5B00 5B01 5B16 5B22 5C02

  5C13 5C14

- **6000 to 6ZZZ**

  6000 6001 6004 6500 6502 6503 6700 6701 6800 6801 6830 6831

  6832 6833 6900 6901 6902 6910 6920 6921 6930 6931 6932 6933

  6940 6941 6942 6943 6944 6945 6946 6A80 6A81 6D01

- **7000 to 7ZZZ**

  7600 7700 7800 7802

- **8000 to 8ZZZ**

  8200 8300

- **A000 to ZZZZ**

  B400 C000 C100 C101

When Error Occurred

If an error occurs in printing, for example, if the paper runs out or jams, a troubleshooting message appears automatically. Take the appropriate action described in the message.

When an error occurs, a message is displayed on the computer or on the printer. For some errors, a support code (error number) is also displayed.

When a Support Code and a Message are displayed on the Computer Screen (Windows):

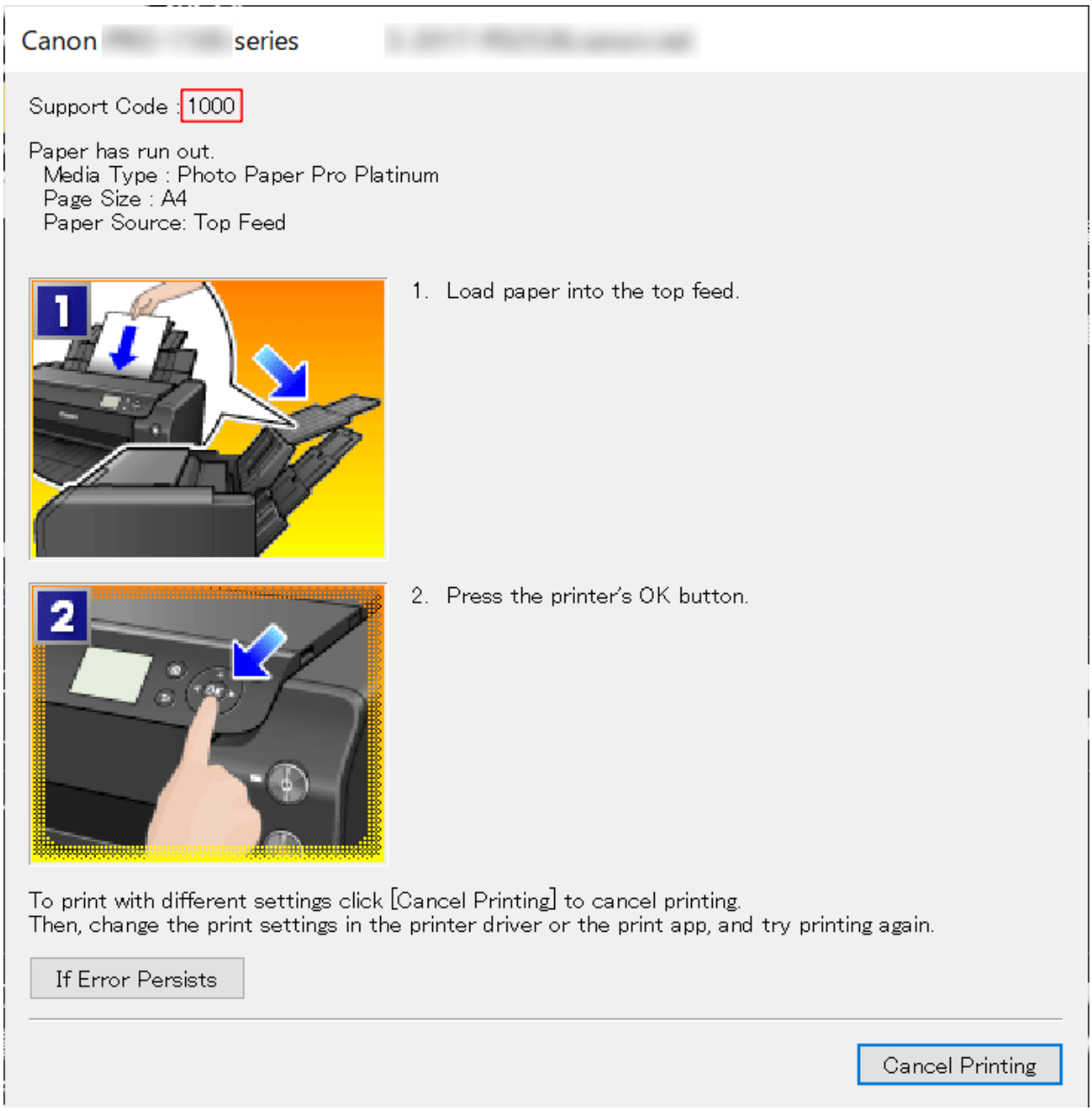

When a Support Code and a Message are displayed on the Printer's LCD:

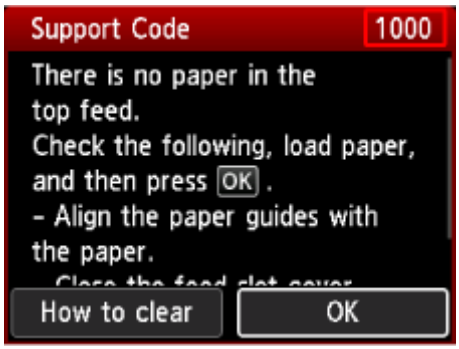

For details on how to resolve errors with Support Codes, see List of Support Code for Error.

1000

Cause

Possible causes include the following.

- There is no paper in the top feed.
- Paper is not loaded in the top feed properly.

What to Do

Take the corresponding actions below.

- Load paper in the top feed.

  ➡ Loading Paper in the Top Feed

  Note

  - The loadable paper differs depending on the paper source. For details on the paper that can be loaded in the top feed, refer to Paper Sources to Load Paper.
  - Load one sheet of A4 / Letter size plain paper in the top feed before aligning the print head during the first printer setup.

- Align the paper guides of the top feed with both edges of the paper.

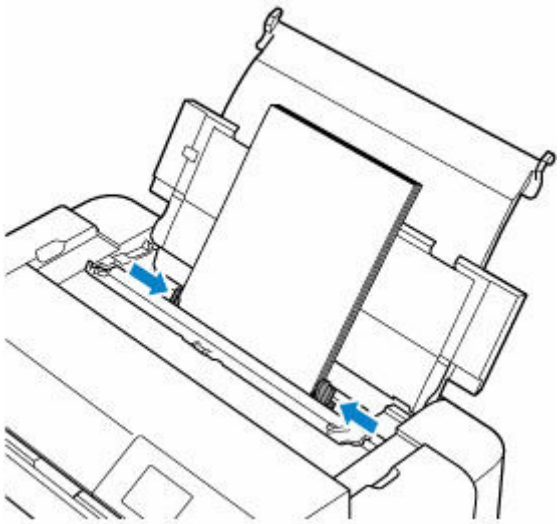

- Close the feed slot cover.

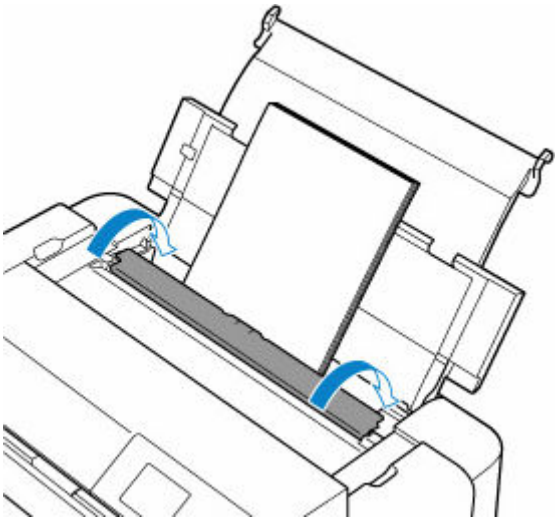

After carrying out the above measures, press the printer's **OK** button.

Note

- To cancel printing, press the printer's **Stop** button.

1001

Cause

There is no multi-purpose tray.

What to Do

Place a multi-purpose tray compatible media on the multi-purpose tray, and then attach the multi-purpose tray to the printer.

Placing Multi-purpose Tray

Then press the printer's **OK** button to cancel the error.

Important

- When you print on multi-purpose tray compatible media, use the supplied multi-purpose tray (the one with the "A" mark).

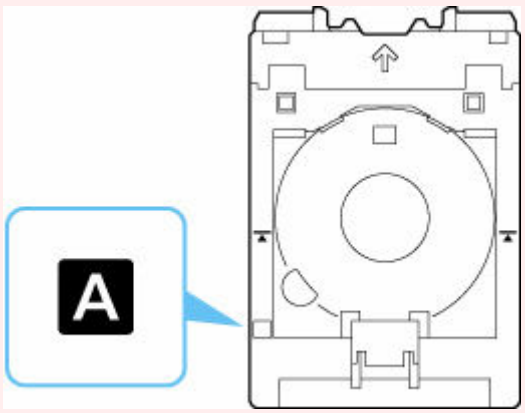

Note

- To cancel printing, press the printer's **Stop** button.

1002

Cause

Printable disc (CD/DVD/BD, etc.) is not set, or the disc position is misaligned.

What to Do

Remove the multi-purpose tray, place the printable disc properly, and then attach the multi-purpose tray to the printer.

➡ Placing/Removing a Printable Disc

Then press the printer's **OK** button to cancel the error.

Important

- When you print on multi-purpose tray compatible media, use the supplied multi-purpose tray (the one with the "A" mark).

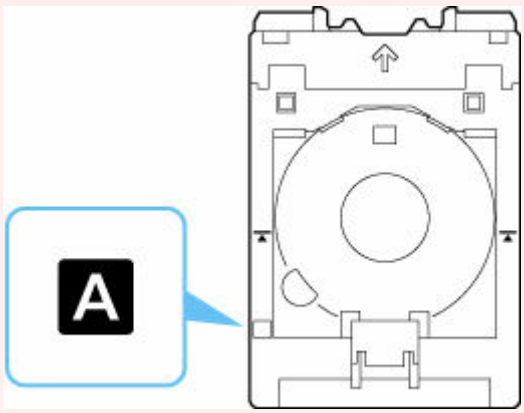

Note

- To cancel printing, press the printer's **Stop** button.

1006

Cause

Possible causes include the following.

- There is no paper in the manual feed tray.
- Paper is not loaded in the manual feed tray properly.

What to Do

Take the corresponding actions below.

- Load one sheet of paper in the manual feed tray.

  ➡ Loading Paper in the Manual Feed Tray

  Note

  - The loadable paper differs depending on the paper source. For details on the paper that can be loaded in the manual feed tray, refer to Paper Sources to Load Paper.

- Align the paper guides of the manual feed tray with the edges of the paper.

After carrying out the above measures, press the printer's **OK** button.

Note

- To cancel printing, press the printer's **Stop** button.
- To continue printing from the manual feed tray, wait until printing is completed, and then load the next sheet.

1013

Cause

Multi-purpose tray compatible media is not set on multi-purpose tray, or the media position is misaligned.

What to Do

Remove the multi-purpose tray, place the multi-purpose tray compatible media properly, and then attach the multi-purpose tray to the printer.

Placing Multi-purpose Tray

Then press the printer's **OK** button to cancel the error.

Important

- When you print on multi-purpose tray compatible media, use the supplied multi-purpose tray (the one with the "A" mark).

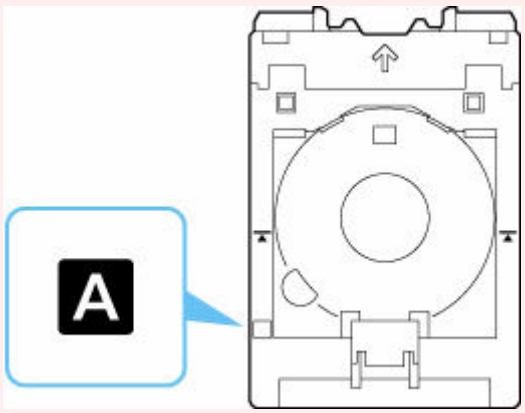

Note

- To cancel printing, press the printer's **Stop** button.

1062

Cause

Paper size setting does not match size of loaded paper.

What to Do

Press the printer's **Stop** button to cancel the error and take the corresponding actions below.

When printing from Windows using a printer driver:

Load paper of the size specified in **Paper Size** on the **Page Setup** sheet of the printer driver, and retry printing.

If this error occurs even you load paper of the size specified in the printer driver, set the printer not to detect the paper width.

To set the printer not to detect the width of the paper, open **Custom Settings** on the **Maintenance** sheet of the printer driver, and set **Disables paper width detection when printing from computer** to **ON**.

➡ Changing the Printer Operation Mode

Note

- Set **Disables paper width detection when printing from computer** to **OFF** once printing is complete.

When printing from macOS using a printer driver:

Load paper of the size specified in **Paper Size** on the Page Setup dialog, and retry printing.

If this error occurs even you load paper of the size specified in the Page Setup dialog, set the printer not to detect the paper width.

To set the printer not to detect the width of the paper, open Canon IJ Printer Utility2, select **Custom Settings** in the pop-up menu, select the **Disable paper width detection when printing from computer** check box.

➡ Opening the Canon IJ Printer Utility2

Note

- Clear the **Disable paper width detection when printing from computer** check box again once printing is complete.

When printing by other methods:

Register the paper size and paper type of the paper loaded in the printer correctly in the printer, and retry printing.

➡ Register Paper Information

If this error occurs even after registering the paper information correctly, set the printer not to detect the paper width.

To set the printer not to detect the width of the paper, select **Various settings** on the printer's HOME screen, select **Printer settings**, **Paper-related settings**, **Advanced paper settings** in this order, select the paper type, and then set **Detect paper width** to **OFF**.

Note

- If you change the setting so that the paper width is not detected, return the setting after printing.

1200

Cause

Top cover is open.

What to Do

Close the top cover and wait for a while.

Do not forget to close it, such as after replacing ink tanks.

1250

Cause

Paper output tray is closed.

What to Do

Open the paper output tray.

1261

Cause

Manual feed tray is in the paper jam clearing position.

What to Do

Return the manual feed tray to the paper feed position and press the printer's **OK** button to cancel the error.

1300

Cause

Paper jammed inside the printer while printing.

What to Do

Follow these steps below to remove jammed paper.

1. Remove the jammed paper depending on the paper source.

   What to Do When Paper Is Jammed

2. Reload paper and press printer's **OK** button.

   The printer resumes printing. Reprint the page you were printing if it was not printed properly due to the paper jam.

   If you turned off the printer in step 1, all jobs in the print queue are canceled. Redo the printing.

If the error appears again, the printer may be damaged. Contact a Canon customer service center.

1308

Cause

Paper is loaded in the manual feed tray when you start printing on a multi-purpose tray compatible media.

What to Do

Remove the paper from the manual feed tray, then press the printer's **OK** button to cancel the error.

1351

Cause

Top cover is open.

What to Do

When replacing the ink tank, follow the instructions on the printer's LCD.

Replacing Ink Tanks

When not replacing the ink tank, close the top cover.

Important

- Prepare a new ink tank before you start replacing one.
- Replace the ink tank quickly so as not to leave the printer without an ink tank.

  The printer may be damaged if it is left without an ink tank, causing a problem such as clogging due to dried ink.

1401

Cause

Print head may not be installed properly or may be damaged.

What to Do

Take the corresponding actions below.

- Install the print head.

  If the print head is already installed, remove and reinstall it.Then close the top cover.

  Turn off the printer and turn it back on.

- Turn off the printer and turn it back on.

If this does not solve the problem, contact your nearest Canon service center to request a repair.

1403

Cause

Print head may be damaged.

What to Do

Turn off the printer and turn it back on.

If this does not solve the problem, contact your nearest Canon service center to request a repair.

1405

Cause

Print head may be damaged.

What to Do

Turn off the printer and turn it back on.

If this does not solve the problem, contact your nearest Canon service center to request a repair.

1408

Cause

Print head may be damaged.

What to Do

Remove the print head and reinstall it.

If this does not solve the problem, contact your nearest Canon service center to request a repair.

1409

Cause

Print head may be damaged.

What to Do

Remove the print head and reinstall it.

If this does not solve the problem, contact your nearest Canon service center to request a repair.

140A

Cause

There is a problem with the print head.

What to Do

Open the top cover and reinstall the print head.

If this does not solve the problem, contact your nearest Canon service center to request a repair.

140C

Cause

There is a problem with the print head.

What to Do

Turn off the power, wait a moment, and then turn it back on.

If this does not solve the problem, contact your nearest Canon service center to request a repair.

1410

Cause

Ink tank may not be installed properly.

What to Do

Remove the ink tank whose color is shown on the printer's LCD and reinstall it.

Press the ink tank until it clicks into place.

If this does not solve the problem, replace the ink tank.

1411

Cause

Ink tank may not be installed properly.

What to Do

Remove the ink tank whose color is shown on the printer's LCD and reinstall it.

Press the ink tank until it clicks into place.

If this does not solve the problem, replace the ink tank.

1412

Cause

Ink tank may not be installed properly.

What to Do

Remove the ink tank whose color is shown on the printer's LCD and reinstall it.

Press the ink tank until it clicks into place.

If this does not solve the problem, replace the ink tank.

1413

Cause

Ink tank may not be installed properly.

What to Do

Remove the ink tank whose color is shown on the printer's LCD and reinstall it.

Press the ink tank until it clicks into place.

If this does not solve the problem, replace the ink tank.

1414

Cause

Ink tank may not be installed properly.

What to Do

Remove the ink tank whose color is shown on the printer's LCD and reinstall it.

Press the ink tank until it clicks into place.

If this does not solve the problem, replace the ink tank.

1415

Cause

Ink tank may not be installed properly.

What to Do

Remove the ink tank whose color is shown on the printer's LCD and reinstall it.

Press the ink tank until it clicks into place.

If this does not solve the problem, replace the ink tank.

1416

Cause

Ink tank may not be installed properly.

What to Do

Remove the ink tank whose color is shown on the printer's LCD and reinstall it.

Press the ink tank until it clicks into place.

If this does not solve the problem, replace the ink tank.

1417

Cause

Ink tank may not be installed properly.

What to Do

Remove the ink tank whose color is shown on the printer's LCD and reinstall it.

Press the ink tank until it clicks into place.

If this does not solve the problem, replace the ink tank.

1418

Cause

Ink tank may not be installed properly.

What to Do

Remove the ink tank whose color is shown on the printer's LCD and reinstall it.

Press the ink tank until it clicks into place.

If this does not solve the problem, replace the ink tank.

1419

Cause

Ink tank may not be installed properly.

What to Do

Remove the ink tank whose color is shown on the printer's LCD and reinstall it.

Press the ink tank until it clicks into place.

If this does not solve the problem, replace the ink tank.

1500

Cause

The ink is running low.

What to Do

Prepare a new ink tank.

The resulting print quality may not be satisfactory, if printing is continued under this condition.

1551

Cause

A genuine Canon ink tank with a history of past use has been detected.

What to Do

To dismiss the message, press the printer's **OK** button.

1552

Cause

A genuine Canon ink tank has been inserted.

What to Do

To dismiss the message, press the printer's **OK** button.

1570

Cause

The ink in the ink tank has run out.

What to Do

Replace the ink tank.

Replacing Ink Tanks

Important

- Prepare a new ink tank before you start replacing one.
- Replace the ink tank quickly so as not to leave the printer without an ink tank.

  The printer may be damaged if it is left without an ink tank, causing a problem such as clogging due to dried ink.

15A1

Cause

Printer setup is not completed.

What to Do

Proceed with printer setup according to the message displayed on the printer's LCD.

If this error occurs while operating the printer from a smartphone / tablet, complete the printer setup and then operate again.

15A2

Cause

Ink tank not inserted.

What to Do

Insert the ink tank correctly, and proceed with printer setup.

15A3

Cause

Protective material or tape may still be attached to print head holder.

What to Do

Open the top cover and make sure the protective material and tape have been removed from the print head holder.

If the protective material or tape is still there, remove it and close the top cover.

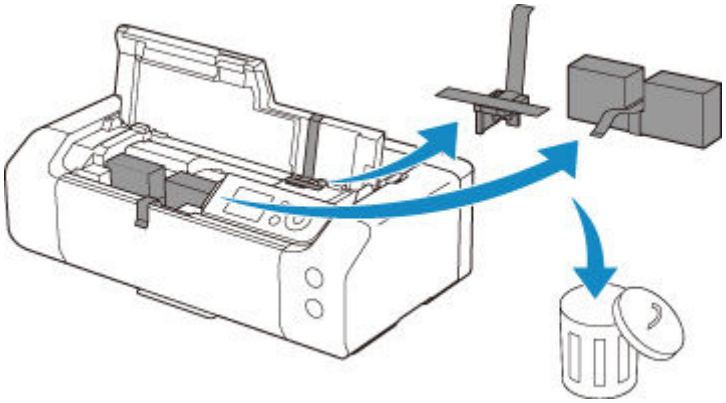

In the case of the first printer setup, select your printer name on the below page, and follow the instructions.

➡ Set Up

1600

Cause

Ink may have run out

What to Do

If printing is in progress, you are recommended to stop printing, replace the ink tank, and then print again.

If printing is in progress and you want to continue printing, press the printer's **OK** button with the ink tank installed. Then printing can continue under the ink out condition. Replace the empty ink tank immediately after the printing. The printer may be damaged if printing is continued under the ink out condition.

1660

Cause

The ink tank cannot be recognized.

What to Do

Printing cannot be performed because the ink tank is not installed or is not compatible with this printer.

Check the ink tank.

If you want to cancel printing, press the printer's **Stop** button.

1684

Cause

The ink tank cannot be recognized.

What to Do

Printing cannot be executed because the ink tank may not be installed properly or may not be compatible with this printer.

Install the appropriate ink tank.

If you want to cancel printing, press the printer's **Stop** button.

168C

Cause

Ink tank is not installed in proper position.

What to Do

Check the ink tank displayed on the printer's LCD and install the ink tank in proper position.

1698

Cause

Printer detected ink out condition.

What to Do

If printing is in progress, stop printing, replace the ink tank, and then print again.

To avoid printing troubles such as the mixing of inks, this printer is designed to stop printing when the remaining ink level in an ink tank goes under the amount of ink required to maintain both printer and print quality.

1699

Cause

Printer detected ink out condition.

What to Do

Stop printing, replace the ink tank, and then print again. Be sure to replace the empty ink tank before resuming printing.

An ink tank that was once empty is installed.

Printing under the ink out condition may cause the printing trouble such as the mixing of inks, or a printer malfunction.

If you want to continue printing, you need to disable the function for detecting the remaining ink level. To disable this function, press and hold the printer's **Stop** button for at least 5 seconds, and then release it.

With this operation, disabling the function for detecting the remaining ink level is memorized. Please be advised that Canon shall not be liable for any malfunction or trouble which may be caused by continuation of printing or refilling of ink.

1700

Cause

Ink absorber is almost full.

What to Do

Press the printer's **OK** button to continue printing. Contact your nearest Canon service center to request a repair.

Note

- In the case of warnings or errors caused by remaining ink levels, the printer cannot print.

1701

Cause

Ink absorber is almost full.

What to Do

Press the printer's **OK** button to continue printing. Contact your nearest Canon service center to request a repair.

Note

- In the case of warnings or errors caused by remaining ink levels, the printer cannot print.

1716

Cause

Ink absorber is almost full.

What to Do

Press the printer's **OK** button to continue printing. Contact your nearest Canon service center to request a repair.

Note

- In the case of warnings or errors caused by remaining ink levels, the printer cannot print.

1730

Cause

The ink tank may be an ink tank that ran out of genuine Canon ink or a counterfeit Canon ink tank.

What to Do

To print, you must replace the ink tank or disable the function for detecting the remaining ink level.

➡ Replacing Ink Tanks

To disable the function for detecting the remaining ink level, press and hold the printer's **Stop** button for at least 5 seconds, and then release it.

By this operation, the fact that you have disabled the function for detecting the remaining ink level will be memorized. Please be advised that Canon shall not be liable for any malfunction or trouble caused by using a non-genuine Canon ink tank or by using non-genuine Canon ink.

Note

- If the function for detecting the remaining ink level is disabled, the ink tank is displayed in white on the Estimated ink levels screen on the LCD.

To report the counterfeit ink tank, access Canon website from the following link.

➡ Report Counterfeit

1750

Cause

The ink tank cannot be recognized.

What to Do

The ink tank cannot be recognized.

Printing cannot be performed because the ink tank is not compatible with this printer.

Check the ink tank.

If you want to cancel printing, press the printer's **Stop** button.

1830

Cause

A certain period of time has elapsed while multi-purpose tray compatible media printing is in progress.

What to Do

If a certain period of time has elapsed while multi-purpose tray compatible media printing is in progress, the printer stops initializing.

To resume initializing, press the printer's **OK** button.

Try the operation again following the instructions on the printer's LCD.

Note

- To cancel printing, press the printer's **Stop** button.

1850

Cause

Multi-purpose tray guide is closed.

What to Do

Open the multi-purpose tray guide and set the multi-purpose tray in proper position.

Placing Multi-purpose Tray

Then press the printer's **OK** button to cancel the error.

Note

- To cancel printing, press the printer's **Stop** button.

1851

Cause

Multi-purpose tray guide is open.

What to Do

Close the multi-purpose tray guide except when printing on multi-purpose tray compatible media.

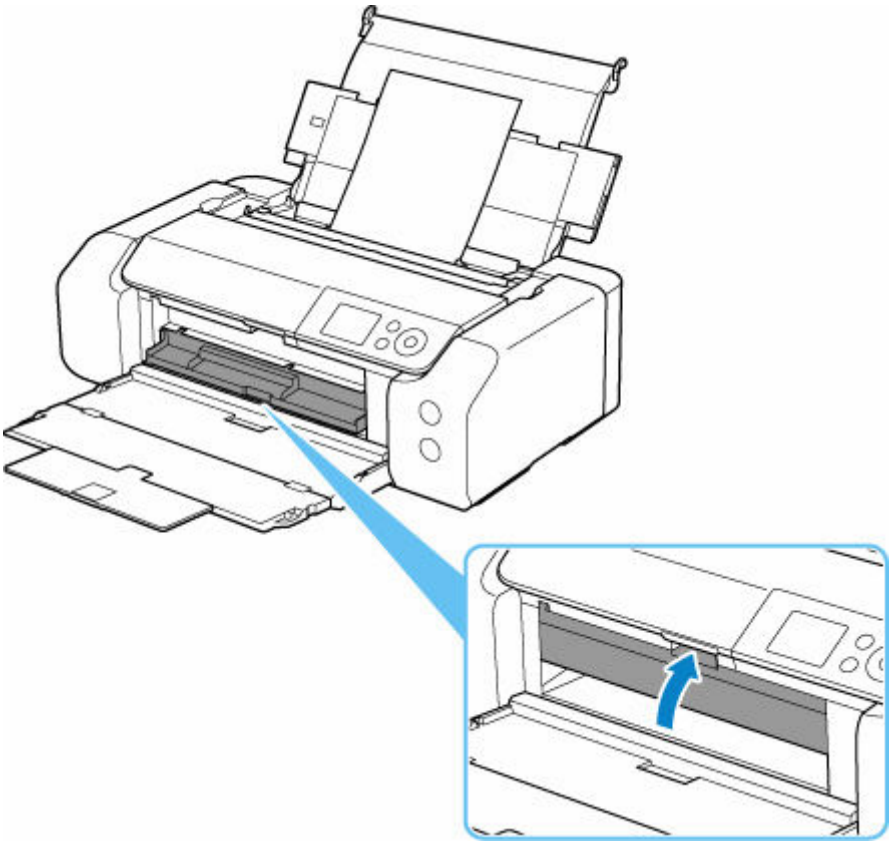

Then press the printer's **OK** button to cancel the error.

Note

- To cancel printing, press the printer's **Stop** button.

1855

Cause

Multi-purpose tray guide has been closed.

What to Do

Open the multi-purpose tray guide and set the multi-purpose tray in proper position.

Then press the printer's **OK** button to cancel the error.

Important

- Do not open or close the multi-purpose tray guide while printing is in progress. Doing so may damage the printer.

Note

- To cancel printing, press the printer's **Stop** button.

1856

Cause

Multi-purpose tray guide has been opened.

What to Do

Close the multi-purpose tray guide and press the printer's **OK** button to cancel the error.

Important

- Do not open or close the multi-purpose tray guide while printing is in progress. Doing so may damage the printer.

Note

- To cancel printing, press the printer's **Stop** button.

1857

Cause

Multi-purpose tray guide is open, so the printer is not ready to print on multi-purpose tray compatible media.

What to Do

Close the multi-purpose tray guide and press the printer's **OK** button to cancel the error.

Note

- Close the multi-purpose tray guide once before starting to print on multi-purpose tray compatible media.
- To cancel printing, press the printer's **Stop** button.

2103

Cause

Printer cannot detect paper size.

What to Do

Press the printer's **Stop** button and retry printing.

If this error still occurs even after printing again, set the printer not to detect the paper width using the operation panel, the printer driver, or Remote UI.

Note

- For more on setting printer not to detect the paper width using the operation panel, see below.

  Paper-related settings

- Depending on the type of paper, the printer may not detect the paper width.

  If the top cover is opened while printing is in progress, the printer may not detect the paper width.

2114

Cause

Paper settings specified when printing do not match the paper information for the top feed registered on the printer.

Note

- For the appropriate combination of the paper settings specified on the printer driver and the paper information registered on the printer, refer to the following.
  - Paper Settings on the Printer Driver and the Printer (Media Type)（Windows）
  - Paper Settings on the Printer Driver and the Printer (Media Type)（macOS）
  - Paper Settings on the Printer Driver and the Printer (Paper Size)（Windows）
  - Paper Settings on the Printer Driver and the Printer (Paper Size)（macOS）
- For how to register paper information on the printer, refer to the following.
  - Register Paper Information

If the paper settings specified when printing differ from the paper information for the top feed registered on the printer, the following message appears on the printer's LCD.

- Paper settings specified on the printer driver when printing:

  Paper size: **A4**

  Media type: **Plain paper**

- Paper information for the top feed registered on the printer:

  Paper size: **A3**

  Media type: **Plain paper**

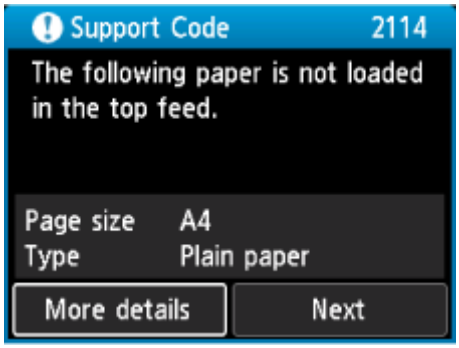

What to Do

Select **Next** on the printer's LCD to display the screen below.

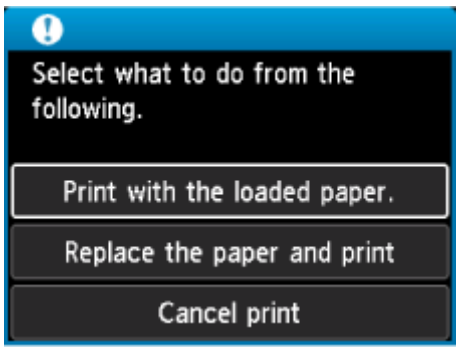

Select the appropriate action.

Note

- Depending on the settings, some of the options below may not be displayed.

Print with the loaded paper.

Select this option to print on the loaded paper with the paper settings specified when printing.

For example, when the paper size specified when printing is A4 and the paper information for the top feed is registered as A3, select this option to print on an A3 paper loaded in the top feed with the A4 setting.

Replace the paper and print

Select this option to print after changing the paper in the top feed.

For example, when the paper size specified when printing is A4 and the paper information for the top feed is registered as A3, select this option to print after changing the paper in the top feed with an A4 paper.

After changing the paper, the paper information registration screen for the top feed appears. Register the paper information on the printer according to the loaded paper.

Note

- If you do not know the paper size and media type to be loaded in the top feed, press the printer's **Back** button. The paper size and media type are displayed.
- For the appropriate combination of the paper settings specified on the printer driver and the paper information registered on the printer, refer to the following.
  - Paper Settings on the Printer Driver and the Printer (Media Type)（Windows）
  - Paper Settings on the Printer Driver and the Printer (Media Type)（macOS）
  - Paper Settings on the Printer Driver and the Printer (Paper Size)（Windows）
  - Paper Settings on the Printer Driver and the Printer (Paper Size)（macOS）

Cancel print

Cancels printing.

Select this option when you want to change the paper settings specified when printing. Change the paper settings and try printing again.

2115

Cause

Paper settings specified when printing do not match the paper information for the manual feed tray registered on the printer.

Note

- For the appropriate combination of the paper settings specified on the printer driver and the paper information registered on the printer, refer to the following.
  - Paper Settings on the Printer Driver and the Printer (Media Type)（Windows）
  - Paper Settings on the Printer Driver and the Printer (Media Type)（macOS）
  - Paper Settings on the Printer Driver and the Printer (Paper Size)（Windows）
  - Paper Settings on the Printer Driver and the Printer (Paper Size)（macOS）
- For how to register paper information on the printer, refer to the following.
  - Register Paper Information

If the paper settings specified when printing differ from the paper information for the manual feed tray registered on the printer, the following message appears on the printer's LCD.

- Paper settings specified on the printer driver when printing:

  Paper size: **A4**

  Media type: **Plain paper**
- Paper information for the manual feed tray registered on the printer:

  Paper size: **A3**

  Media type: **Plain paper**

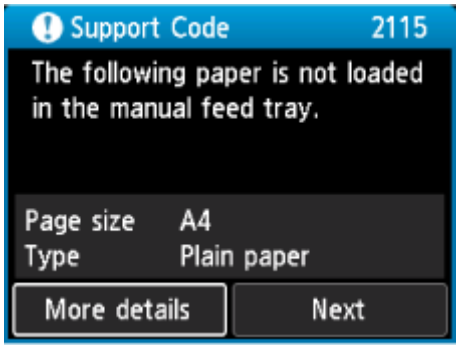

What to Do

Select **Next** on the printer's LCD to display the screen below.

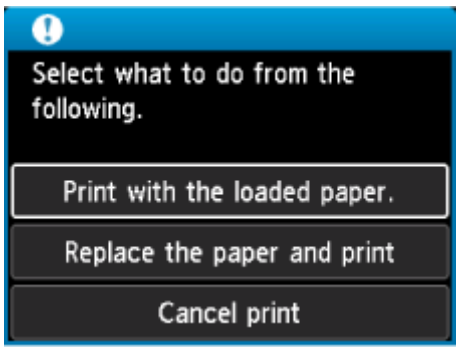

Select the appropriate action.

Note

- Depending on the settings, some of the options below may not be displayed.

Print with the loaded paper.

Select this option to print on the loaded paper with the paper settings specified when printing.

For example, when the paper size specified when printing is A4 and the paper information for the manual feed tray is registered as A3, select this option to print on an A3 paper loaded in the manual feed tray with the A4 setting.

Replace the paper and print

Select this option to print after changing the paper in the manual feed tray.

For example, when the paper size specified when printing is A4 and the paper information for the manual feed tray is registered as A3, select this option to print after changing the paper in the manual feed tray with an A4 paper.

After changing the paper, the paper information registration screen for the manual feed tray appears. Register the paper information on the printer according to the loaded paper.

Note

- If you do not know the paper size and media type to be loaded in the manual feed tray, press the printer's **Back** button. The paper size and media type are displayed.
- For the appropriate combination of the paper settings specified on the printer driver and the paper information registered on the printer, refer to the following.

  - Paper Settings on the Printer Driver and the Printer (Media Type)（Windows）
  - Paper Settings on the Printer Driver and the Printer (Media Type)（macOS）
  - Paper Settings on the Printer Driver and the Printer (Paper Size)（Windows）
  - Paper Settings on the Printer Driver and the Printer (Paper Size)（macOS）

Cancel print

Cancels printing.

Select this option when you want to change the paper settings specified when printing. Change the paper settings and try printing again.

2500

Cause

Cause of following may have occurred failure of automatic adjustment to straighten lines and colors.

- Print head nozzles are clogged.
- Size of paper loaded is incorrect.
- Paper output slot is exposed to strong light.

What to Do

Press the printer's **OK** button to cancel the error and take the corresponding actions below.

- Check the print head condition by printing the nozzle check pattern.
- Load the correct size paper and perform automatic print head alignment again.
- Adjust your operating environment and/or the position of the printer so that the paper output slot is not exposed directly to strong light.

After carrying out the above actions, perform automatic adjustment to straighten lines and colors again.

If the error is still not resolved, press the printer's **OK** button to cancel the error and perform manual adjustment to straighten lines and colors.

➡ Manual Adjustment to Straighten Lines and Align Colors

2503

Cause

Printing does not start correctly.

What to Do

Press the printer's **OK** button, and then restart printing.

3000

Cause

The print head has not been calibrated.

What to Do

Print Head Alignment - Auto is recommended.

Automatic Adjustment to Straighten Lines and Align Colors

Note

- This message will appear until **Print Head Alignment - Auto** is carried out.

3306

Cause

Media information cannot be recognized because the printer media information is corrupt.

What to Do

Start the Media Configuration Tool, and then recover the media information.

➡ Media Configuration Tool Guide

To set the Media Configuration Tool to recovery mode, open the Media Configuration Tool, select this device and then click **OK**.

Select and load the media information backup file.

If you do not have a media information backup file, contact your nearest Canon service center to request a repair.

3310

Cause

Incorrect print data.

Illegal number of parameters.

What to Do

Defective print data, please check the print results.

If using printing software such as RIP (Raster Image Processor), contact the software manufacturer.

3311

Cause

Incorrect print data.

Illegal number of parameters.

What to Do

Defective print data, please check the print results.

If using printing software such as RIP (Raster Image Processor), contact the software manufacturer.

3312

Cause

Incorrect print data.

Required items have been omitted.

What to Do

Defective print data, please check the print results.

If using printing software such as RIP (Raster Image Processor), contact the software manufacturer.

3313

Cause

Incorrect print data.

Data out of range.

What to Do

Defective print data, please check the print results.

If using printing software such as RIP (Raster Image Processor), contact the software manufacturer.

3314

Cause

Incorrect print data.

Resolution value out of range.

What to Do

Defective print data, please check the print results.

If using printing software such as RIP (Raster Image Processor), contact the software manufacturer.

3315

Cause

Incorrect print data.

Compression method value out of range.

What to Do

Defective print data, please check the print results.

If using printing software such as RIP (Raster Image Processor), contact the software manufacturer.

3316

Cause

Incorrect print data.

Incorrect data formatting (color sequence, bit count).

What to Do

Defective print data, please check the print results.

If using printing software such as RIP (Raster Image Processor), contact the software manufacturer.

3317

Cause

Incorrect print data.

Illegal combination of resolution and image data format.

What to Do

Defective print data, please check the print results.

If using printing software such as RIP (Raster Image Processor), contact the software manufacturer.

3318

Cause

Incorrect print data.

Illegal number of parameters.

What to Do

Defective print data, please check the print results.

If using printing software such as RIP (Raster Image Processor), contact the software manufacturer.

3319

Cause

Incorrect print data.

Illegal number of parameters.

What to Do

Defective print data, please check the print results.

If using printing software such as RIP (Raster Image Processor), contact the software manufacturer.

3413

Cause

Prevent paper abrasion has been set.

What to Do

Prevent paper abrasion may reduce print speed.

If you continue printing in the current setting, select **Yes** using the ◄ ► buttons and press the printer's **OK** button.

If you disable this setting, select **No** and press the printer's **OK** button. Select **Various settings** on the HOME screen, select **Printer settings**, **Print settings**, and then set **Prevent paper abrasion** to **OFF**.

3440

Cause

Easy wireless connect has failed.

What to Do

Press the printer's **OK** button to cancel the error and retry Easy wireless connect.

If the error is not resolved, use another method to set up Wi-Fi.

3441

Cause

Easy wireless connect has failed.

What to Do

Press the printer's **OK** button to cancel the error and retry Easy wireless connect.

If the error is not resolved, use another method to set up Wi-Fi.

3442

Cause

Printing of the first side is complete when doing manual duplex printing.

What to Do

Prepare to print the other side.

Load the paper with the printed side facing down in the top feed without changing its orientation.

To check how to load paper on the printer's LCD, select **How to set** using the ◄ ► buttons and press the printer's **OK** button.

When you are ready to print the other side, select **Start print** and press the printer's **OK** button.

Note

- To cancel printing, press the printer's **Stop** button.

3443

Cause

Printing of the first side is complete when doing manual duplex printing.

What to Do

Prepare to print the other side.

Rotate the printed paper 180 degrees and load it with the printed side facing down in the top feed.

To check how to load paper on the printer's LCD, select **How to set** using the ◄ ► buttons and press the printer's **OK** button.

When you are ready to print the other side, select **Start print** and press the printer's **OK** button.

Note

- To cancel printing, press the printer's **Stop** button.

3444

Cause

Printing of the first side is complete when doing manual duplex printing.

What to Do

Prepare to print the other side.

Rotate the printed paper 180 degrees and load it with the printed side facing down in the top feed.

To check how to load paper on the printer's LCD, select **How to set** using the ◄ ► buttons and press the printer's **OK** button.

When you are ready to print the other side, select **Start print** and press the printer's **OK** button.

Note

- To cancel printing, press the printer's **Stop** button.

3445

Cause

Printing of the first side is complete when doing manual duplex printing.

What to Do

Prepare to print the other side.

Load the paper with the printed side facing down in the top feed without changing its orientation.

To check how to load paper on the printer's LCD, select **How to set** using the ◄ ► buttons and press the printer's **OK** button.

When you are ready to print the other side, select **Start print** and press the printer's **OK** button.

Note

- To cancel printing, press the printer's **Stop** button.

3446

Cause

IP address and subnet mask are conflicting.

What to Do

Press the printer's **OK** button to cancel the error.

Disable the wireless direct or change the Wi-Fi network configuration. When changing the network configuration, specify a unique subnet range for each of the wireless direct and the Wi-Fi to prevent a conflict.

For details on changing the network configuration, refer to the documentation for your wireless router.

3447

Cause

An error occurred while communicating via wireless direct or while in standby.

What to Do

Press the printer's **OK** button to cancel the error.

Turn off the printer and turn it back on.

3454

Cause

Printer error has occurred.

What to Do

Printer needs repair. Please contact customer support.

3455

Cause

Printer error has occurred.

What to Do

A matter has been identified that requires immediate attention. Please contact customer support.

4103

Cause

Cannot perform printing with current print settings.

What to Do

Press the printer's **Stop** button to cancel printing.

Change the print settings specified when printing and retry printing.

4104

Cause

The paper settings (paper size / paper type) specified when printing are incorrect, or paper source specified when printing is incorrect.

What to Do

Press the printer's **Stop** button to cancel printing. Check the paper that can be loaded in the top feed / manual feed tray.

- Loading Paper in the Top Feed
- Loading Paper in the Manual Feed Tray

Take one of the actions below and retry printing.

- Change the paper settings (paper size / paper type) specified when printing.
- Change the paper source setting.

4109

Cause

Paper size that cannot be printed from the manual feed tray is specified.

What to Do

Press the printer's **Stop** button to cancel printing. Check the paper that can be loaded in the manual feed tray.

➡ Loading Paper in the Manual Feed Tray

Change the paper size specified when printing and retry printing.

Note

- To print on paper that can be printed only from the top feed, reload the paper in the top feed, and then register the paper information in the printer.

410E

Cause

Printing cannot be performed with the current combination of paper size and paper type.

What to Do

Press the printer's **Stop** button to stop printing.

Change to the paper type for long-format, and perform printing again.

- Perform Long-form Printing (Windows)
- Perform Long-form Printing (macOS)

4111

Cause

The media type specified is incompatible with this device.

What to Do

Press the printer's **Stop** button to stop printing.

Check the media type settings, and then try again.

Note

Use the Media Configuration Tool to update the print media information in your printer.

➡ Managing Paper Information on Printer Using Media Configuration Tool

495A

Cause

An error occurred while communicating via Wi-Fi or while in standby.

What to Do

Turn off the printer and turn it back on.

5100

Cause

Printer error has occurred.

What to Do

If you are printing, press the printer's **Stop** button to cancel printing, then turn off the printer.

Check the following:

- Make sure print head holder motion is not impeded by protective materials for securing the print head holder, jammed paper, etc.

  Remove any impediment.

  Important

  - When clearing an impediment to print head holder motion, be careful not to touch clear film (A) or white belt (B).

    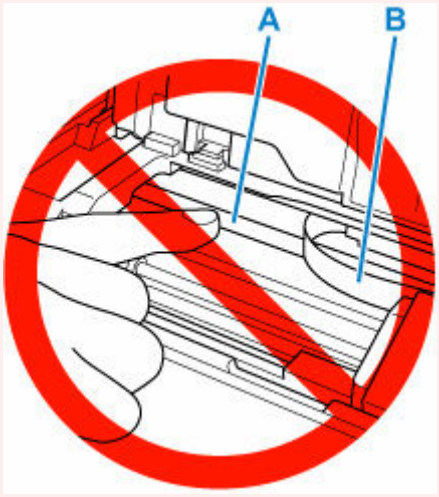

    If you soil or scratch this part by touching it with paper or your hand, it could damage the printer.

- Make sure the ink tanks are properly installed.

  Press ink tanks until they click into place.

Turn the printer back on.

If the error appears again, the printer may be damaged. Contact a Canon customer service center.

5200

Cause

Printer error has occurred.

What to Do

Turn off the printer and unplug it.

Plug in the printer again and turn it back on.

If this does not solve the problem, contact your nearest Canon service center to request a repair.

520C

Cause

Printer error has occurred.

What to Do

Turn off the printer and unplug it.

Plug in the printer again and turn it back on.

If this does not solve the problem, contact your nearest Canon service center to request a repair.

520E

Cause

Printer error has occurred.

What to Do

Turn off the printer and unplug it.

Plug in the printer again and turn it back on.

If this does not solve the problem, contact your nearest Canon service center to request a repair.

5250

Cause

Printer error has occurred.

What to Do

Turn off the printer and unplug it.

Plug in the printer again and turn it back on.

If this does not solve the problem, contact your nearest Canon service center to request a repair.

5400

Cause

Printer error has occurred.

What to Do

Turn off the printer and unplug it.

Plug in the printer again and turn it back on.

If this does not solve the problem, contact your nearest Canon service center to request a repair.

5700

Cause

Printer error has occurred.

What to Do

Turn off the printer and unplug it.

Plug in the printer again and turn it back on.

If this does not solve the problem, contact your nearest Canon service center to request a repair.

5B00

Cause

Printer error has occurred.

What to Do

Contact your nearest Canon service center to request a repair.

Note

- In the case of warnings or errors caused by remaining ink levels, the printer cannot print.

5B01

Cause

Printer error has occurred.

What to Do

Contact your nearest Canon service center to request a repair.

Note

- In the case of warnings or errors caused by remaining ink levels, the printer cannot print.

5B16

Cause

Printer error has occurred.

What to Do

Turn off the printer and unplug it.

Plug in the printer again and turn it back on.

If this does not solve the problem, contact your nearest Canon service center to request a repair.

5B22

Cause

Printer error has occurred.

What to Do

Turn off the printer and unplug it.

Plug in the printer again and turn it back on.

If this does not solve the problem, contact your nearest Canon service center to request a repair.

5C02

Cause

Printer error has occurred.

What to Do

Turn off the printer and unplug it.

Plug in the printer again and turn it back on.

If this does not solve the problem, contact your nearest Canon service center to request a repair.

5C13

Cause

Printer error has occurred.

What to Do

Turn off the printer and unplug it.

Plug in the printer again and turn it back on.

If this does not solve the problem, contact your nearest Canon service center to request a repair.

5C14

Cause

Printer error has occurred.

What to Do

Turn off the printer and unplug it.

Plug in the printer again and turn it back on.

If this does not solve the problem, contact your nearest Canon service center to request a repair.

6000

Cause

Printer error has occurred.

What to Do

Turn off the printer and unplug it.

Plug in the printer again and turn it back on.

If this does not solve the problem, contact your nearest Canon service center to request a repair.

6001

Cause

Printer error has occurred.

What to Do

Turn off the printer and unplug it.

Plug in the printer again and turn it back on.

If this does not solve the problem, contact your nearest Canon service center to request a repair.

6004

Cause

Printer error has occurred.

What to Do

Turn off the printer and unplug it.

Plug in the printer again and turn it back on.

If this does not solve the problem, contact your nearest Canon service center to request a repair.

6500

Cause

Printer error has occurred.

What to Do

Turn off the printer and unplug it.

Plug in the printer again and turn it back on.

If this does not solve the problem, contact your nearest Canon service center to request a repair.

6502

Cause

Printer error has occurred.

What to Do

Turn off the printer and unplug it.

Plug in the printer again and turn it back on.

If this does not solve the problem, contact your nearest Canon service center to request a repair.

6503

Cause

Printer error has occurred.

What to Do

Turn off the printer and unplug it.

Plug in the printer again and turn it back on.

If this does not solve the problem, contact your nearest Canon service center to request a repair.

6700

Cause

Printer error has occurred.

What to Do

Turn off the printer and unplug it.

Plug in the printer again and turn it back on.

If this does not solve the problem, contact your nearest Canon service center to request a repair.

6701

Cause

Printer error has occurred.

What to Do

Turn off the printer and unplug it.

Plug in the printer again and turn it back on.

If this does not solve the problem, contact your nearest Canon service center to request a repair.

6800

Cause

Printer error has occurred.

What to Do

Turn off the printer and unplug it.

Plug in the printer again and turn it back on.

If this does not solve the problem, contact your nearest Canon service center to request a repair.

6801

Cause

Printer error has occurred.

What to Do

Turn off the printer and unplug it.

Plug in the printer again and turn it back on.

If this does not solve the problem, contact your nearest Canon service center to request a repair.

6830

Cause

Printer error has occurred.

What to Do

Turn off the printer and unplug it.

Plug in the printer again and turn it back on.

If this does not solve the problem, contact your nearest Canon service center to request a repair.

6831

Cause

Printer error has occurred.

What to Do

Turn off the printer and unplug it.

Plug in the printer again and turn it back on.

If this does not solve the problem, contact your nearest Canon service center to request a repair.

6832

Cause

Printer error has occurred.

What to Do

Turn off the printer and unplug it.

Plug in the printer again and turn it back on.

If this does not solve the problem, contact your nearest Canon service center to request a repair.

6833

Cause

Printer error has occurred.

What to Do

Turn off the printer and unplug it.

Plug in the printer again and turn it back on.

If this does not solve the problem, contact your nearest Canon service center to request a repair.

6900

Cause

Printer error has occurred.

What to Do

Turn off the printer and unplug it.

Plug in the printer again and turn it back on.

If this does not solve the problem, contact your nearest Canon service center to request a repair.

6901

Cause

Printer error has occurred.

What to Do

Turn off the printer and unplug it.

Plug in the printer again and turn it back on.

If this does not solve the problem, contact your nearest Canon service center to request a repair.

6902

Cause

Printer error has occurred.

What to Do

Turn off the printer and unplug it.

Plug in the printer again and turn it back on.

If this does not solve the problem, contact your nearest Canon service center to request a repair.

6910

Cause

Printer error has occurred.

What to Do

Turn off the printer and unplug it.

Plug in the printer again and turn it back on.

If this does not solve the problem, contact your nearest Canon service center to request a repair.

6920

Cause

Printer error has occurred.

What to Do

Turn off the printer and unplug it.

Plug in the printer again and turn it back on.

If this does not solve the problem, contact your nearest Canon service center to request a repair.

6921

Cause

Printer error has occurred.

What to Do

Turn off the printer and unplug it.

Plug in the printer again and turn it back on.

If this does not solve the problem, contact your nearest Canon service center to request a repair.

6930

Cause

Printer error has occurred.

What to Do

Turn off the printer and unplug it.

Plug in the printer again and turn it back on.

If this does not solve the problem, contact your nearest Canon service center to request a repair.

6931

Cause

Printer error has occurred.

What to Do

Turn off the printer and unplug it.

Plug in the printer again and turn it back on.

If this does not solve the problem, contact your nearest Canon service center to request a repair.

6932

Cause

Printer error has occurred.

What to Do

Turn off the printer and unplug it.

Plug in the printer again and turn it back on.

If this does not solve the problem, contact your nearest Canon service center to request a repair.

6933

Cause

Printer error has occurred.

What to Do

Turn off the printer and unplug it.

Plug in the printer again and turn it back on.

If this does not solve the problem, contact your nearest Canon service center to request a repair.

6940

Cause

Printer error has occurred.

What to Do

Turn off the printer and unplug it.

Plug in the printer again and turn it back on.

If this does not solve the problem, contact your nearest Canon service center to request a repair.

6941

Cause

Printer error has occurred.

What to Do

Turn off the printer and unplug it.

Plug in the printer again and turn it back on.

If this does not solve the problem, contact your nearest Canon service center to request a repair.

6942

Cause

Printer error has occurred.

What to Do

Turn off the printer and unplug it.

Plug in the printer again and turn it back on.

If this does not solve the problem, contact your nearest Canon service center to request a repair.

6943

Cause

Printer error has occurred.

What to Do

Turn off the printer and unplug it.

Plug in the printer again and turn it back on.

If this does not solve the problem, contact your nearest Canon service center to request a repair.

6944

Cause

Printer error has occurred.

What to Do

Turn off the printer and unplug it.

Plug in the printer again and turn it back on.

If this does not solve the problem, contact your nearest Canon service center to request a repair.

6945

Cause

Printer error has occurred.

What to Do

Turn off the printer and unplug it.

Plug in the printer again and turn it back on.

If this does not solve the problem, contact your nearest Canon service center to request a repair.

6946

Cause

Printer error has occurred.

What to Do

Turn off the printer and unplug it.

Plug in the printer again and turn it back on.

If this does not solve the problem, contact your nearest Canon service center to request a repair.

6A80

Cause

Printer error has occurred.

What to Do

Turn off the printer and unplug it.

Plug in the printer again and turn it back on.

If this does not solve the problem, contact your nearest Canon service center to request a repair.

6A81

Cause

Printer error has occurred.

What to Do

Turn off the printer and unplug it.

Plug in the printer again and turn it back on.

If this does not solve the problem, contact your nearest Canon service center to request a repair.

6D01

Cause

Printer error has occurred.

What to Do

Turn off the printer and unplug it.

Plug in the printer again and turn it back on.

If this does not solve the problem, contact your nearest Canon service center to request a repair.

7600

Cause

An error requiring a repair has occurred.

What to Do

Turn off the printer and unplug it.

Plug in the printer again and turn it back on.

If this does not solve the problem, contact your nearest Canon service center to request a repair.

7700

Cause

An error requiring a repair has occurred.

What to Do

Turn off the printer and unplug it.

Plug in the printer again and turn it back on.

If this does not solve the problem, contact your nearest Canon service center to request a repair.

7800

Cause

An error requiring a repair has occurred.

What to Do

Turn off the printer and unplug it.

Plug in the printer again and turn it back on.

If this does not solve the problem, contact your nearest Canon service center to request a repair.

7802

Cause

Printer error has occurred.

What to Do

Turn off the printer and unplug it.

Plug in the printer again and turn it back on.

If this does not solve the problem, contact your nearest Canon service center to request a repair.

8200

Cause

Printer error has occurred.

What to Do

Turn off the printer and unplug it.

Plug in the printer again and turn it back on.

If this does not solve the problem, contact your nearest Canon service center to request a repair.

8300

Cause

Printer error has occurred.

What to Do

Turn off the printer and unplug it.

Plug in the printer again and turn it back on.

If this does not solve the problem, contact your nearest Canon service center to request a repair.

B400

Cause

Printer error has occurred.

What to Do

Turn off the printer and unplug it.

Plug in the printer again and turn it back on.

If this does not solve the problem, contact your nearest Canon service center to request a repair.

C000

Cause

Printer error has occurred.

What to Do

Turn off the printer and unplug it.

Plug in the printer again and turn it back on.

If this does not solve the problem, contact your nearest Canon service center to request a repair.

C100

Cause

Printer error has occurred.

What to Do

Please stop using this printer immediately, then contact customer support.

C101

Cause

Printer error has occurred.

What to Do

Please stop using this printer and unplug power cord immediately, then contact customer support.

Printer Information

- Safety
- Handling Precautions
- Specifications

Safety

- Safety Precautions
- Regulatory Information
- WEEE

Safety Precautions

Follow the items below to use the printer safely. Furthermore, do not perform any actions that are not described in the instruction manual of the product. This may cause unexpected accidents such as fire or electrical shock. Safety standard marks and declarations are only valid for the supported voltages and frequencies in the applicable countries or regions.

⚠ Warning

- **For people who are using a cardiac pacemaker**

  This product generates a low-level magnetic field. If you experience discomfort while working around this product, leave the area and consult a doctor.

- **Turn off the power immediately in the following circumstances.**

  If you continue to use the printer in the following cases, it may cause fires or electrical shock. Immediately press the power button to turn off the printer, disconnect the power plug from the outlet, and make a request for repairs.

  - If any foreign matter (metal fragments, liquids, etc.) gets inside the printer
  - If the printer emits smoke, abnormal odors, or abnormal noises
  - If the power plug or power cord becomes hot, corroded, bent, frayed, or damaged

- **Follow the items below (risk of fire, electrical shock, or injury).**

  - Do not set up the product in any location exposed to alcohol, thinner, or other flammable liquids.
  - Do not disassemble or modify the product.
  - Use the cables that are included with the printer. Do not use the cables included with the printer with other devices.
  - Do not use outside of the designated power supply voltage and frequency.
  - Insert the power plug securely and completely into the power outlet.
  - Never handle the power plug with wet hands.
  - Do not damage the power cord or other cables by twisting, bundling, tying, pulling or excessively bending them.
  - Never place a heavy object on the power cord.
  - Do not insert multiple power plugs into the same outlet. Do not connect multiple extension cords.
  - If there is lightning nearby, disconnect the power plug from the outlet and do not use the product.
  - When cleaning, always disconnect the cables and power plug, and do not use highly flammable sprays or liquids such as alcohol or thinner.
  - Once per month, disconnect the power plug and power cord from the outlet, and check that dust has not accumulated, and that there are no abnormalities such as heat generation, rust, bending, chafing, or cracking.

⚠ Caution

- Be careful not to let anything get inside the printer. This would cause malfunction.
- Do not put your hands inside the printer while printing.
- Do not touch the print head or other metal parts immediately after printing.

- **About the ink**
  - Always store ink tanks out of the reach of infants and toddlers.
  - In case ink is accidentally licked or swallowed, rinse out mouth or give one or two glasses of water to drink. If irritation or discomfort occurs, obtain medical advice immediately.
  - In case ink gets in contact with eyes, rinse with water immediately. In case ink gets in contact with skin, wash with soap and water immediately. If irritation to eyes or skin persists, obtain medical advice immediately.

Choosing a location

- Never install the printer on an unstable or vibrating surface.
- Do not install the printer in locations that are very humid or dusty, in direct sunlight, outdoors, or close to a heating source.
  To avoid the risk of fire or electric shocks, use the printer under the operating environment specified in the Specifications.
- Do not place the printer on a thick rug or carpet.
  Foreign objects such as hair and dust may get inside the product.
- Do not place the printer with its back attached to the wall.

Power Supply

- Ensure that the area around the power outlet is kept clear at all times so you can easily unplug the power cord if necessary.
- Never remove the plug by pulling on the cord.
  Pulling the cord may damage the power cord, leading to possible fire or electrical shock.

Working Around the Printer

- Never put your hands or fingers in the printer while it is printing.
- When using and transferring the printer, do not tilt it, stand it on its side, or turn it upside down. There is a risk of the ink spilling.
- Do not place anything on top of the printer. Be especially careful to avoid metal objects such as paper clips and staples, and containers holding flammable liquids such as alcohol or thinner.
- Do not attempt to open, disassemble or modify the ink tanks. Ink may leak and damage your printer.
- Do not throw print heads or ink tanks in the fire.

Regulatory Information

Users in the U.S.A.

FCC Notice (U.S.A. Only)
For 120V, 60Hz model
Model Number: K10624 (Contains FCC Approved WLAN Module K30387)

This device complies with Part 15 of the FCC Rules. Operation is subject to the following two conditions: (1) This device may not cause harmful interference, and (2) this device must accept any interference received, including interference that may cause undesired operation.

Note: This equipment has been tested and found to comply with the limits for a Class B digital device, pursuant to Part 15 of the FCC Rules. These limits are designed to provide reasonable protection against harmful interference in a residential installation. This equipment generates, uses and can radiate radio frequency energy and, if not installed and used in accordance with the instructions, may cause harmful interference to radio communications.
However, there is no guarantee that interference will not occur in a particular installation. If this equipment does cause harmful interference to radio or television reception, which can be determined by turning the equipment off and on, the user is encouraged to try to correct the interference by one or more of the following measures:

- Reorient or relocate the receiving antenna.
- Increase the separation between the equipment and receiver.
- Connect the equipment into an outlet on a circuit different from that to which the receiver is connected.
- Consult the dealer or an experienced radio/TV technician for help.

Use of a shielded cable is required to comply with Class B limits in Subpart B of Part 15 of the FCC Rules.

Do not make any changes or modifications to the equipment unless otherwise specified in the manual. If such changes or modifications should be made, you could be required to stop operation of the equipment.

Changes or modifications not expressly approved by the party responsible for compliance could void the user's authority to operate equipment.

This transmitter must not be co-located or operating in conjunction with any other antenna or transmitter.

This equipment complies with FCC radiation exposure limits set forth for an uncontrolled environment and meets the FCC radio frequency (RF) Exposure Guidelines as this equipment has very low levels of RF energy.

But it is desirable that it should be installed and operated keeping the radiator at least 20cm or more away from person's body.

Canon U.S.A., Inc.
One Canon Park
Melville, New York 11747
1-800-652-2666

Users in Europe

Product Information for the requirement of COMMISSION REGULATION (EU)

The power consumption in Off Mode or network standby and the transition time to Off or network standby are as follows:
https://www.canon-europe.com/consumer/lot26/

Interference

Do not use the printer around medical equipment or other electronic devices. Signals from the printer may interfere with the correct operation of these devices.

WEEE

Only for the United Kingdom



These symbols indicate that this product is not to be disposed of with your household waste, according to the UK Waste Electrical and Electronic Equipment Regulations and the UK Batteries and Accumulators Regulations. If a chemical symbol is printed beneath the symbol shown above, in accordance with the UK Batteries and Accumulators Regulations, this indicates that a heavy metal (Hg = Mercury, Cd = Cadmium, Pb = Lead) is present in this battery or accumulator at a concentration above an applicable threshold specified in the UK Batteries and Accumulators Regulations. This product should be handed over to a designated collection point, e.g., on an authorized one-for-one basis when you buy a new similar product or to an authorized collection site for recycling waste electrical and electronic equipment (EEE) and batteries and accumulators. Improper handling of this type of waste could have a possible impact on the environment and human health due to potentially hazardous substances that are generally associated with EEE. Your cooperation in the correct disposal of this product will contribute to the effective usage of natural resources. For more information about the recycling of this product, please contact your local city office, waste authority, approved scheme or your household waste disposal service or visit www.canon-europe.com/sustainability/approach/.

Only for European Union and EEA (Norway, Iceland and Liechtenstein)



These symbols indicate that this product is not to be disposed of with your household waste, according to the WEEE Directive (2012/19/EU), the Battery Regulation ((EU) 2023/1542) and/or national legislations implementing those Directive and Regulation.
If a chemical symbol is printed beneath the symbol shown above, in accordance with the Battery Regulation, this indicates that a heavy metal (Pb = Lead) is present in this battery at a concentration above an applicable threshold specified in the Battery Regulation.
This product should be handed over to a designated collection point, e.g., on an authorized one-for-one basis when you buy a new similar product or to an authorized collection site for recycling waste electrical and electronic equipment (EEE) and batteries. Improper handling of this type of waste could have a possible impact on the environment and human health due to potentially hazardous substances that are generally associated with EEE. Your cooperation in the correct disposal of this product will contribute to the effective usage of natural resources.
For more information about the recycling of this product, please contact your local city office, waste authority, approved scheme or your household waste disposal service or visit www.canon-europe.com/sustainability/approach/.

Nur für die Europäische Union und EWR (Norwegen, Island und Liechtenstein)



Diese Symbole weisen darauf hin, dass dieses Produkt gemäß WEEE-Richtlinie (2012/19/EU) (Richtlinie über Elektro- und Elektronik-Altgeräte), Batterienverordnung (EU) 2023/1542 und nationalen Gesetzen zur Umsetzung dieser Richtlinie und Verordnung nicht über den Hausmüll entsorgt werden darf.
Falls sich unter dem oben abgebildeten Symbol ein chemisches Symbol befindet, bedeutet dies gemäß der Batterieverordnung, dass in dieser Batterie ein Schwermetall (Pb = Blei) in einer Konzentration vorhanden ist, die über einem in der Verordnung angegebenen Grenzwert liegt.
Dieses Produkt muss bei einer dafür vorgesehenen Sammelstelle abgegeben werden. Dies kann z. B. durch Rückgabe beim Kauf eines neuen ähnlichen Produkts oder durch Abgabe bei einer autorisierten Sammelstelle für die Wiederaufbereitung von Elektro- und Elektronik-Altgeräten sowie Batterien geschehen. Der unsachgemäße Umgang mit Altgeräten kann aufgrund potenziell gefährlicher Stoffe, die generell mit Elektro- und Elektronik-Altgeräten in Verbindung stehen, negative Auswirkungen auf die Umwelt und die menschliche Gesundheit haben.
Durch Ihre Mitarbeit bei der umweltgerechten Entsorgung dieses Produkts tragen Sie zu einer effektiven Nutzung natürlicher Ressourcen bei.
Um weitere Informationen über die Wiederverwertung dieses Produkts zu erhalten, wenden Sie sich an Ihre Stadtverwaltung, den öffentlich-rechtlichen Entsorgungsträger, eine autorisierte Stelle für die Entsorgung von Elektro- und Elektronik-Altgeräten oder Ihr örtliches Entsorgungsunternehmen oder besuchen Sie
www.canon-europe.com/sustainability/approach/.

Zusatzinformationen für Deutschland:

Dieses Produkt kann durch Rückgabe an den Händler, unter den in der Verordnung des Elektro- und Elektronikgerätegesetzes beschriebenen Bedingungen abgegeben werden.
Als Endbenutzer und Besitzer von Elektro- oder Elektronikgeräten sind Sie verpflichtet:

- diese einer vom unsortierten Siedlungsabfall getrennten Erfassung zuzuführen,
- Altbatterien und Altakkumulatoren, die nicht von Altgerät umschlossen sind, sowie Lampen, die zerstörungsfrei aus dem Altgerät entnommen werden können, vor der Abgabe an einer Erfassungsstelle vom Altgerät zerstörungsfrei zu trennen,
- personenbezogene Daten auf den Altgeräten vor der Entsorgung zu löschen.

Die Bedeutung des Symbols der durchgestrichenen Abfalltonne auf Rädern finden Sie oben in dieser Beschreibung.
Die Vertreiber von Elektro- oder Elektronikgeräten haben die Pflicht zur unentgeltlichen Rücknahme von Altgeräten. Die Vertreiber haben die Endnutzer über die von ihnen geschaffenen Möglichkeiten der Rückgabe von Altgeräten zu informieren.

Union Européenne, Norvège, Islande et Liechtenstein uniquement.



Ces symboles indiquent que ce produit ne doit pas être mis au rebut avec les ordures ménagères, comme le spécifient la Directive européenne DEEE (2012/19/UE), la législation européenne relative à l'élimination des piles usagés ((EU) 2023/1542) et les lois en vigueur dans votre pays appliquant ces directives et législations.
Si un symbole de toxicité chimique est imprimé sous le symbole illustré ci-dessus conformément à la législation relative aux piles, il indique la présence d'un métal lourd (Pb = plomb) dans la pile à une concentration supérieure au seuil applicable spécifié par la législation.
Ce produit doit être confié au distributeur à chaque fois que vous achetez un produit neuf similaire, ou à un point de collecte mis en place par les collectivités locales pour le recyclage des Déchets des Équipements Électriques et Électroniques (DEEE) et piles. Le traitement inapproprié de ce type de déchet risque d'avoir des répercussions sur l'environnement et la santé humaine, du fait de la présence de substances potentiellement dangereuses généralement associées aux équipements électriques et électroniques.
Votre entière coopération dans le cadre de la mise au rebut correcte de ce produit favorisera une meilleure utilisation des ressources naturelles.
Pour plus d'informations sur le recyclage de ce produit, contactez vos services municipaux, votre éco-organisme ou les autorités locales compétentes, ou consultez le site www.canon-europe.com/sustainability/approach/.

Uitsluitend bestemd voor de Europese Unie en EER (Noorwegen, IJsland en Liechtenstein)



Met deze symbolen wordt aangegeven dat dit product in overeenstemming met de AEEA-richtlijn (2012/19/EU), de wetgeving ((EU) 2023/1542) betreffende batterijen en/of de plaatselijk geldende wetgevingen waarin deze richtlijnen en wetgevingen zijn geïmplementeerd, niet bij het normale huisvuil mag worden weggegooid.
Indien onder het hierboven getoonde symbool een chemisch symbool gedrukt staat, geeft dit in overeenstemming met de wetgeving betreffende batterijen aan dat deze batterij een zwaar metaal bevat (Pb = lood) waarvan de concentratie de toepasselijke drempelwaarde in overeenstemming met de genoemde richtlijn overschrijdt.
Dit product dient te worden ingeleverd bij een hiervoor aangewezen inzamelpunt, bijv. door dit in te leveren bij een hiertoe erkend verkooppunt bij aankoop van een gelijksoortig product, of bij een officiële inzameldienst voor de recycling van elektrische en elektronische apparatuur (EEA) en batterijen. Door de potentieel gevaarlijke stoffen die gewoonlijk gepaard gaan met EEA, kan onjuiste verwerking van dit type afval mogelijk nadelige gevolgen hebben voor het milieu en de menselijke gezondheid. Uw medewerking bij het op juiste wijze weggooien van dit product draagt bij tot effectief gebruik van natuurlijke hulpbronnen.
Voor verdere informatie over recycling van dit product kunt u contact opnemen met uw plaatselijke

gemeente, afvaldienst, officiële dienst voor klein chemisch afval of afvalstortplaats, of kunt u terecht op www.canon-europe.com/sustainability/approach/

Sólo para la Unión Europea y el Área Económica Europea (Noruega, Islandia y Liechtenstein)



Estos iconos indican que este producto no debe desecharse con los residuos domésticos de acuerdo con la Directiva sobre RAEE (2012/19/UE) y el Reglamento (UE) 2023/1542 relativo a las pilas y baterías y sus residuos y/o la legislación nacional que transponen e implementan dicha.
Si aparece un símbolo químico bajo este icono, de acuerdo con el Reglamento sobre Pilas y baterías, significa que la pila contiene metales pesados (Pb = Plomo) en una concentración superior al límite especificado en dicho Reglamento.
Este producto deberá entregarse en un punto de recogida designado, por ejemplo, entregándolo en el lugar de venta al adquirir un producto nuevo similar o en un centro autorizado para la recogida de residuos de aparatos eléctricos y electrónicos (RAEE) y baterías. La gestión incorrecta de este tipo de residuos puede afectar al medio ambiente y a la salud humana debido a las sustancias potencialmente nocivas que suelen contener estos aparatos.
Su cooperación en la correcta eliminación de este producto contribuirá al correcto aprovechamiento de los recursos naturales.
Los usuarios tienen derecho a devolver pilas o baterías usadas sin coste alguno. El precio de venta de pilas y baterías incluye el coste de la gestión medioambiental de su desecho, no reflejándose la cuantía de dicho coste en la factura suministradas a los usuarios finales.
Si desea más información sobre el reciclado de este producto, póngase en contacto con su municipio, el servicio o el organismo encargado de la gestión de residuos domésticos o visite www.canon-europe.com/sustainability/approach/.

Solo per Unione Europea e SEE (Norvegia, Islanda e Liechtenstein)



Questi simboli indicano che il prodotto non può essere smaltito con i rifiuti domestici, ai sensi della Direttiva RAEE (2012/19/UE), del Regolamentola sulle Batterie ((UE) 2023/1542) e/o delle leggi nazionali che attuano tale Direttiva e Regolamento.
Se sotto il simbolo indicato sopra è riportato un simbolo chimico, in osservanza del Regolamento sulle Batterie, tale simbolo indica la presenza di un metallo pesante (Pb = Piombo) nella batteria con un livello di concentrazione superiore a una soglia applicabile specificata nel Regolamento sulle Batterie.
Il prodotto deve essere conferito a un punto di raccolta designato, ad esempio il rivenditore in caso di acquisto di un nuovo prodotto simile oppure un centro di raccolta autorizzato per il riciclaggio di rifiuti di apparecchiature elettriche ed elettroniche (RAEE) nonché di batterie. Un trattamento improprio di questo tipo di rifiuti può avere conseguenze negative sull'ambiente e sulla salute umana a causa delle sostanze potenzialmente nocive solitamente contenute in tali rifiuti.
La collaborazione dell'utente per il corretto smaltimento di questo prodotto contribuirà a un utilizzo efficace

delle risorse naturali.
Per ulteriori informazioni sul riciclaggio di questo prodotto, vogliate contattare il vostro ufficio comunale, le autorità competenti, un sistema di raccolta rifiuti autorizzato, o il vostro servizio di raccolta dei rifiuti domestici, oppure visitare il sito
www.canon-europe.com/sustainability/approach/.

Apenas para a União Europeia e Espaço Económico Europeu (Noruega, Islândia e Liechtenstein)



Estes símbolos indicam que este produto não deve ser descartado juntamente com os resíduos urbanos, segundo a Diretiva REEE - Diretiva 2012/19/UE, segundo o Regulamento Baterias - Regulamento (UE) 2023/1542 e/ou a legislação nacional que transpõe esta Diretiva e Regulamento.
Caso esteja marcado um símbolo químico abaixo do símbolo mostrado acima, de acordo com o Regulamento Baterias, isso significa que está presente nesta bateria um metal pesado (Pb = Chumbo) numa concentração acima do respetivo limite especificado no Regulamento.
Este produto deve ser entregue num ponto de recolha designado, por exemplo num local de receção autorizado quando compra um equipamento novo idêntico, ou num local de recolha autorizado para reciclar residuos de equipamento elétrico e eletrónico (EEE) e de baterias. O tratamento inadequado deste tipo de resíduos pode ter um impacto negativo no ambiente e na saúde humana, devido a substâncias potencialmente perigosas que estão geralmente associadas aos EEE.
A sua cooperação no descarte adequado deste produto irá contribuir para a utilização mais eficaz dos recursos naturais.
Para saber mais sobre como reciclar este produto, por favor contacte a divisão de resíduos dos serviços municipais ou entidades gestoras autorizadas para a gestão destes fluxos de resíduos ou visite www.canon-europe.com/sustainability/approach/.

Gælder kun i Europæiske Union og EØS (Norge, Island og Liechtenstein)



Disse symboler betyder, at produktet ikke må bortskaffes sammen med dagrenovation i henhold til WEEE-direktivet (2012/19/EU), batteriforordningen ((EU) 2023/1542) og/eller de lokale lovgivninger, som disse direktiver og forordninger er gennemført i.
Hvis der i overensstemmelse med batteriforordningen er trykt et kemisk symbol under det symbol, der er vist ovenfor, betyder det, at batteriet indeholder tungmetal (Pb = bly) i en koncentration, som ligger over de grænseværdier, der er beskrevet i batteriforordningen.
Produktet skal afleveres på et godkendt indsamlingssted, f.eks. i overensstemmelse med en godkendt én-til-én-procedure, når du indkøber et nyt tilsvarende produkt, eller på et godkendt indsamlingssted for elektronikaffald og batterier. Forkert håndtering af denne type affald kan medføre negative konsekvenser for miljøet og menneskers helbred på grund af de potentielt sundhedsskadelige stoffer, der generelt kan forefindes i elektrisk og elektronisk udstyr.

Når du foretager korrekt bortskaffelse af produktet, bidrager du til effektiv brug af naturressourcerne. Kontakt din kommune, den lokale affaldsmyndighed, det lokale affaldsanlæg, eller besøg www.canon-europe.com/sustainability/approach/ for at få flere oplysninger om genbrug af dette produkt.

Μόνο για την Ευρωπαϊκή Ένωση και τον ΕΟΧ (Νορβηγία, Ισλανδία και Λιχτενστάιν)



Αυτά τα σύμβολα υποδεικνύουν ότι αυτό το προϊόν δεν πρέπει να απορρίπτεται μαζί με τα οικιακά απορρίμματα, σύμφωνα με την Οδηγία για τα Απόβλητα Ηλεκτρικού και Ηλεκτρονικού Εξοπλισμού (ΑΗΗΕ) (2012/19/ΕΕ), την τον Κανονισμό για τις Μπαταρίες ((ΕΕ) 2023/1542) ή/και τις εθνικές νομοθεσίες που εφαρμόζει τις εν λόγω Οδηγίες και Κανονισμούς.
Εάν κάποιο χημικό σύμβολο είναι τυπωμένο κάτω από το σύμβολο που φαίνεται παραπάνω, σύμφωνα με τον Κανονισμό για τις Μπαταρίες, υποδηλώνει ότι κάποιο βαρύ μέταλλο (Pb = Μόλυβδος) υπάρχει στην μπαταρία σε συγκέντρωση μεγαλύτερη από το ισχύον επίπεδο που καθορίζεται στον Κανονισμό για τις Μπαταρίες.
Αυτό το προϊόν πρέπει να παραδίδεται σε καθορισμένο σημείο συλλογής, π.χ. σε μια εξουσιοδοτημένη βάση ανταλλαγής όταν αγοράζετε ένα νέο παρόμοιο προϊόν ή σε μια εξουσιοδοτημένη θέση συλλογής για την ανακύκλωση των αποβλήτων ηλεκτρικού και ηλεκτρονικού εξοπλισμού (ΗΗΕ) και των μπαταριών. Ο ακατάλληλος χειρισμός αυτού του τύπου αποβλήτων μπορεί να έχει αρνητικό αντίκτυπο στο περιβάλλον και την υγεία του ανθρώπου, λόγω δυνητικά επικίνδυνων ουσιών που γενικά συνδέονται με τον ΗΗΕ.
Η συνεργασία σας για τη σωστή απόρριψη αυτού του προϊόντος θα συμβάλει στην αποτελεσματική χρήση των φυσικών πόρων. Για περισσότερες πληροφορίες σχετικά με ανακύκλωση αυτού του προϊόντος, επικοινωνήστε με το τοπικό γραφείο της πόλης σας, την υπηρεσία απορριμμάτων, το εγκεκριμένο σχήμα ή την υπηρεσία απόρριψης οικιακών αποβλήτων ή επισκεφθείτε τη διεύθυνση https://www.canon-europe.com/sustainability/approach/ .

Gjelder kun den europeiske union og EØS (Norge, Island og Liechtenstein)



Disse symbolene indikerer at dette produktet ikke skal kastes sammen med husholdningsavfall, i henhold til WEEE-direktivet (2012/19/EU), batteri-forordning EU 2023/1542 og/eller nasjonal lov som har implementert disse direktivene og forordninger.
Hvis et kjemisk symbol vises under symbolet vist ovenfor, i samsvar med batteri-forordning EU 2023/1542, indikerer dette at et tungmetall (Pb = bly) finnes i batteriet i en konsentrasjon over en gjeldende øvre grense som er spesifisert i batteri-forordning EU 2023/1542.
Produktet må leveres til et dertil egnet innsamlingspunkt, det vil si på en autorisert en-til-en-basis når en kjøper et nytt lignende produkt, eller til et autorisert innsamlingssted for resirkulering av avfall fra elektrisk og elektronisk utstyr (EE-utstyr) og batterier. Feil håndtering av denne typen avfall kan være miljø- og helseskadelig på grunn av potensielt skadelige stoffer som ofte brukes i EE-utstyr.
Din innsats for korrekt avhending av produktet vil bidra til effektiv bruk av naturressurser.

Du kan få mer informasjon om resirkulering av dette produktet ved å kontakte lokale myndigheter, avfallsadministrasjonen, et godkjent program eller husholdningens renovasjonsselskap, eller gå til www.canon-europe.com/sustainability/approach/ .

Vain Euroopan unionin sekä ETA:n (Norja, Islanti ja Liechtenstein) alueelle.



Nämä tunnukset osoittavat, että sähkö- ja elektroniikkalaiteromua koskeva direktiivi (SER-direktiivi, 2012/19/EU), paristoasetus ((EU) 2023/1542) sekä kansallinen lainsäädäntö kieltävät tuotteen hävittämisen talousjätteen mukana. Jos yllä olevan symbolin alapuolelle on paristoasetuksen mukaisesti painettu kemiallisen aineen tunnus, kyseinen paristo sisältää raskasmetalleja (Pb = lyijy) enemmän kuin paristoasetuksen salliman määrän.
Tuote on vietävä asianmukaiseen keräyspisteeseen, esimerkiksi kodinkoneliikkeeseen uutta vastaavaa tuotetta ostettaessa tai viralliseen sähkö- ja elektroniikkalaiteromun tai paristojen keräyspisteeseen. Sähkö- ja elektroniikkalaiteromun virheellinen käsittely voi vahingoittaa ympäristöä ja ihmisten terveyttä, koska laitteet saattavat sisältää ympäristölle ja terveydelle haitallisia aineita. Tuotteen asianmukainen hävittäminen säästää myös luonnonvaroja.
Jos haluat lisätietoja tämän tuotteen kierrätyksestä, ota yhteys kunnan jätehuoltoviranomaisiin tai käyttämääsi jätehuoltoyhtiöön tai käy osoitteessa www.canon-europe.com/sustainability/approach/.

Endast för Europeiska unionen och EES (Norge, Island och Liechtenstein)



De här symbolerna visar att produkten inte får sorteras och slängas som hushållsavfall enligt WEEE-direktivet (2012/19/EU), batteriförordningen ((EU) 2023/1542) och/eller nationell lagstiftning som implementerar dessa direktiv och förordningar.
Om en kemisk symbol förekommer under ovanstående symbol innebär detta enligt batteriförordningen att en tungmetall (Pb = Bly) förekommer i batteriet med en koncentration som överstiger tillämplig gräns som anges i batteriförordningen.
Produkten ska lämnas in på en avsedd insamlingsplats, t.ex. på en återvinningsstation auktoriserad att hantera elektrisk och elektronisk utrustning (EE-utrustning) samt batterier eller hos handlare som är auktoriserade att byta in varor då nya, motsvarande köps (en mot en). Olämplig hantering av avfall av den här typen kan ha negativ inverkan på miljön och människors hälsa på grund av de potentiellt farliga ämnen som kan återfinnas i elektrisk och elektronisk utrustning.
Din medverkan till en korrekt avfallshantering av produkten bidrar till effektiv användning av naturresurserna.
Om du vill ha mer information om var du kan lämna in den här produkten, kontakta ditt lokala kommunkontor, berörd myndighet eller företag för avfallshantering eller se www.canon-europe.com/sustainability/approach/.

Pouze Evropská unie a EHP (Norsko, Island a Lichtenštejnsko)



Tento symbol znamená, že podle směrnice OEEZ (2012/19/EU), nařízení o bateriích (2023/1542) a/nebo podle vnitrostátních právních prováděcích předpisů k této směrnici a nařízení nemá být tento výrobek likvidován s odpadem z domácností.
Je li v souladu s požadavky nařízení o bateriích vytištěna pod výše uvedeným symbolem chemická značka, udává, že tato baterie obsahuje těžké kovy (Pb = olovo) v koncentraci vyšší, než je příslušná hodnota předepsaná nařízením.
Tento výrobek má být vrácen do určeného sběrného místa, např. v rámci autorizovaného systému odběru jednoho výrobku za jeden nově prodaný podobný výrobek, nebo do autorizovaného sběrného místa pro recyklaci odpadních elektrických a elektronických zařízení (OEEZ), baterií. Nevhodné nakládání s tímto druhem odpadu by mohlo mít negativní dopad na životní prostředí a lidské zdraví, protože elektrická a elektronická zařízení zpravidla obsahují potenciálně nebezpečné látky. Vaše spolupráce na správné likvidaci tohoto výrobku napomůže efektivnímu využívání přírodních zdrojů.
Chcete li získat podrobné informace týkající se recyklace tohoto výrobku, obraťte se prosím na místní úřad, orgán pro nakládání s odpady, schválený systém nakládání s odpady či společnost zajišťující likvidaci domovního odpadu, nebo navštivte webové stránky www.canon-europe.com/sustainability/approach/

Csak az Európai Unió és az EGT (Norvégia, Izland és Liechtenstein) országaiban



Ezek a szimbólumok azt jelzik, hogy a termék hulladékkezelése a háztartási hulladéktól különválasztva, az elektromos és elektronikus berendezések hulladékairól (WEEE) szóló (2012/19/EU) irányelvnek és az elemekről,valamint a hulladék elemekről szóló ((EU) 2023/1542) rendeletnek megfelelően és/vagy ezen irányelveknek megfelelő helyi előírások szerint történik.
Amennyiben a fent feltüntetett szimbólum alatt egy vegyjel is szerepel, az elemekről szóló rendeletben foglaltak értelmében ez azt jelzi, hogy az elem a rendeletben meghatározott határértéknél nagyobb mennyiségben tartalmaz nehézfémet (Pb = ólom).
E terméket az arra kijelölt gyűjtőhelyre kell juttatni – pl. hasonló termék vásárlásakor a régi becserélésére vonatkozó hivatalos program keretében, vagy az elektromos és elektronikus berendezések (EEE) hulladékainak gyűjtésére, valamint a hulladék elemek gyűjtésére kijelölt hivatalos gyűjtőhelyre. Az ilyen jellegű hulladékok nem előírásszerű kezelése az elektromos és elektronikus berendezésekhez (EEE) általánosan kapcsolható potenciálisan veszélyes anyagok révén hatással lehet a környezetre és az egészségre.
E termék megfelelő leselejtezésével Ön is hozzájárul a természeti források hatékony használatához.
A termék újrahasznosítását illetően informálódjon a helyi polgármesteri hivatalnál, a helyi közterület-fenntartó vállalatnál, a hivatalos hulladéklerakó telephelyen vagy a háztartási hulladék begyűjtését végző szolgáltatónál, illetve látogasson el a www.canon-europe.com/sustainability/approach/ internetes oldalra.

Tylko dla krajów Unii Europejskiej oraz EOG (Norwegia, Islandia i Liechtenstein)



Te symbole oznaczają, że produktu nie należy wyrzucać razem z odpadami gospodarstwa domowego, zgodnie z Dyrektywą WEEE w sprawie zużytego sprzętu elektrycznego i elektronicznego (2012/19/UE), Rozporządzeniem Parlamentu Europejskiego i Rady 2023/1542 w sprawie baterii i/lub przepisami krajowymi wdrażającymi tę dyrektywę i rozporządzenie.
Jeśli pod powyższym symbolem znajduje się symbol chemiczny, zgodnie z Rozporzadzeniem w sprawie baterii oznacza to, że bateria zawiera metal ciężki (Pb = ołów) w stężeniu przekraczającym odpowiedni poziom określony w Rozporzadzeniu.
Użytkownicy baterii mają obowiązek korzystać z dostępnego programu zwrotu, recyklingu, odzysku i bezpiecznego unieszkodliwienia baterii, np. na zasadzie oddania „jeden za jeden” przy zakupie nowego, podobnego produktu.
Niewłaściwe postępowanie z tego typu odpadami może mieć wpływ na środowisko i zdrowie ludzi ze względu na substancje potencjalnie niebezpieczne, które są zazwyczaj związane ze zużytym sprzętem elektrycznym i elektronicznym.
Państwa współpraca w zakresie właściwego zagospodarowania tego produktu przyczyni się do efektywnego wykorzystania zasobów naturalnych.
W celu uzyskania informacji o sposobie recyklingu tego produktu prosimy o kontakt z właściwym urzędem miejskim lub zakładem gospodarki komunalnej bądź zapraszamy na stronę www.canon-europe.com/sustainability/approach/ .

Platí len pre štáty Európskej únie a EHP (Nórsko, Island a Lichtenštajnsko)



Tieto symboly označujú, že podľa Smernice o odpade z elektrických a elektronických zariadení (OEEZ) 2012/19/EÚ, Nariadenia Európskeho parlamentu a Rady (EU) 2023/1542 o batériách a odpadových batériách, a podľa platnej legislatívy Slovenskej republiky implementujúcej túto smernicu a nariadenie sa tento výrobok nesmie likvidovať spolu s komunálnym odpadom.
Ak je v súlade s požiadavkami nariadenia chemická značka vytlačená pod vyššie uvedeným symbolom, znamená to, že táto batéria obsahuje ťažké kovy (Pb = olovo) v koncentrácii vyššej, ako je príslušná povolená hodnota stanovená v nariadení.
Výrobok je potrebné odovzdať do určeného zberného miesta, napr. prostredníctvom výmeny za kúpu nového podobného výrobku, alebo na autorizované zberné miesto, ktoré recykluje odpad z elektrických a elektronických zariadení (EEZ) a batérií. Nesprávna manipulácia s takýmto typom odpadu môže mať negatívny vplyv na životné prostredie a ľudské zdravie, pretože elektrické a elektronické zariadenia obsahujú potenciálne nebezpečné látky.
Spoluprácou na správnej likvidácii tohto výrobku prispejete k účinnému využívaniu prírodných zdrojov. Ďalšie informácie o recyklácii tohto výrobku získate od miestneho/obecného úradu, okresného úradu odboru životného prostredia, zo schváleného systému nakladania s odpadmi alebo od spoločnosti, ktorá

zabezpečuje zber a likvidáciu komunálneho odpadu. Viac informácií nájdete aj na webovej stránke: www.canon-europe.com/sustainability/approach/ .

Ainult Euroopa Liidu ja EMP (Norra, Island ja Liechtenstein) puhul.



Need sümbolid näitavad, et vastavalt elektroonikaromude direktiivile (2012/19/EL), patareide määrusele ((EL) 2023/1542) ja/või siseriiklikele õigusaktidele, millega neid direktiive ja määrusi rakendatakse, ei tohi seda toodet kõrvaldada koos olmejäätmetega.
Kui ülaltoodud sümboli alla on trükitud see keemiline sümbol, tähendab see vastavalt patareieeskirjale, et selles patareis ületab raskemetalli (Pb = plii) kontsentratsioon patareieeskirjas sätestatud kohaldatavat piirmäära.
See toode tuleb anda selleks ettenähtud kogumispunkti, nt üks ühele põhimõttel uue sarnase toote ostmisel või elektri- ja elektroonikaseadmete ning patareide ringlussevõtuks volitatud kogumispunkti.
Seda tüüpi jäätmete ebaõige käitlemine võib potentsiaalselt ohtlike ainete tõttu, mis on üldiselt seotud elektri- ja elektroonikaseadmetega,mõjutada keskkonda ja inimeste tervist . Teie koostöö selle toote õigel kõrvaldamisel aitab kaasa loodusvarade tõhusale kasutamisele.
Lisateavet selle toote ringlussevõtu kohta saate oma kohalikult omavalitsuselt, jäätmekäitlusasutuselt, heakskiidetud süsteemilt või oma kodumajapidamisele jäätmekäitlusteenuse osutajalt või külastades veebilehte
www.canon-europe.com/sustainability/approach/.

Attiecas tikai uz Eiropas Savienību un EEZ (Norvēģija, Islande un Lihtenšteina)



Šie simboli norāda, ka saskaņā ar EEIA direktīvu (2012/19/ES), Bateriju regulu ((ES) 2023/1542) un/vai valsts tiesību aktiem, ar kuriem īsteno šo direktīvu un regulu, šo izstrādājumu nedrīkst izmest kopā ar sadzīves atkritumiem.
Ja zem iepriekš norādītā simbola ir uzdrukāts ķīmiskais simbols saskaņā ar Bateriju regulu, tas norāda, ka šajā baterijā ir smags metāls (Pb = svins), kura koncentrācija pārsniedz piemērojamo robežvērtību, kas noteikta Bateriju regulā.
Šis izstrādājums ir jānodod noteiktā savākšanas vietā, piemēram, saskaņā ar apstiprinātu principu "viens par vienu", kad iegādājaties jaunu līdzīgu izstrādājumu, vai autorizētā elektrisko un elektronisko iekārtu (EEI) un bateriju atkritumu savākšanas vietā. Nepareiza rīcība ar šāda veida atkritumiem var ietekmēt vidi un cilvēku veselību, jo EEI parasti ir saistītas ar potenciāli bīstamām vielām. Jūsu sadarbība, pareizi utilizējot šo produktu, veicinās efektīvu dabas resursu izmantošanu.
Lai iegūtu vairāk informācijas par šī izstrādājuma pārstrādi, sazinieties ar vietējo pilsētas pārvaldi, atkritumu apsaimniekošanas iestādi, apstiprinātu shēmu vai sadzīves atkritumu apglabāšanas dienestu, vai apmeklējiet tīmekļa vietni:
www.canon-europe.com/sustainability/approach/.

Tik Europos Sąjungoje ir EEE (Norvegijoje, Islandijoje ir Lichtenšteine)



Šie simboliai rodo, kad šio gaminio negalima išmesti kartu su buitinėmis atliekomis pagal EEĮ atliekų direktyvą (2012/19/ES), baterijų reglamentą ((ES) 2023/1542) ir (arba) nacionalinius teisės aktus, kuriais įgyvendinama ši direktyva ir reglamentas.
Jei po pirmiau nurodytu simboliu išspausdintas cheminis simbolis pagal baterijų reglamentą, tai reiškia, kad šioje baterijoje yra sunkiųjų metalų (Pb = švino), kurių koncentracija viršija taikomą ribinę vertę, nurodytą baterijų reglamente.
Šį gaminį reikia atiduoti į paskirtą surinkimo punktą, pvz., vadovaujantis principu „vienas už vieną“, kai perkate naują panašų gaminį, arba į įgaliotą elektros ir elektroninės įrangos (EEĮ) ir baterijų atliekų surinkimo vietą. Netinkamas šios rūšies atliekų tvarkymas gali turėti įtakos aplinkai ir žmonių sveikatai dėl potencialiai pavojingų medžiagų, kurios paprastai būna susijusios su EEĮ. Bendradarbiaudami ir teisingai utilizuodami šį gaminį prisidėsite prie efektyvaus gamtos išteklių naudojimo.
Norėdami gauti daugiau informacijos apie šio gaminio perdirbimą, kreipkitės į vietinę miesto įstaigą, atliekų tvarkymo instituciją, patvirtintą programą ar buitinių atliekų šalinimo tarnybą arba apsilankykite adresu
www.canon-europe.com/sustainability/approach/.

Samo za Evropsko unijo in EGP (Norveška, Islandija in Lihtenštajn)



Ti simboli pomenijo, da tega izdelka skladno z Direktivo OEEO (2012/19/EU), uredbo (EU) 2023/1542 in/ali nacionalno zakonodajo, ki uvaja Direktivo in Uredbo, ne smete odlagati z nesortiranimi gospodinjskimi odpadki.
Če je pod zgoraj prikazanim simbolom natisnjen kemijski simbol, to v skladu z Uredbo pomeni, da je v tej bateriji prisotna težka kovina (Pb = svinec), in sicer v koncentraciji, ki je nad relevantno mejno vrednostjo, določeno v Uredbi.
Ta izdelek je potrebno odnesti na izbrano zbirno mesto, t. j. pooblaščeno trgovino, kjer ob nakupu novega (podobnega) izdelka vrnete starega, ali na pooblaščeno zbirno mesto za ponovno uporabo odpadne električne in elektronske opreme (EEO) ter baterij. Neustrezno ravnanje s to vrsto odpadkov lahko negativno vpliva na okolje in človeško zdravje zaradi potencialno nevarnih snovi, ki so pogosto povezane z EEO.
Vaše sodelovanje pri pravilnem odlaganju tega izdelka predstavlja pomemben prispevek k smotrni izrabi naravnih virov.
Za več informacij o ponovni uporabi tega izdelka se obrnite na lokalen mestni urad, pristojno službo za odpadke, predstavnika pooblaščenega programa za obdelavo odpadkov ali na lokalno komunalo. Lahko pa tudi obiščete našo spletno stran
www.canon-europe.com/sustainability/approach/ .

Само за Европейския съюз и ЕИП (Норвегия, Исландия и Лихтенщайн)



Тези символи показват, че този продукт не трябва да се изхвърля заедно с битовите отпадъци съгласно Директивата за ИУЕЕО (2012/19/ЕС), Регламент за батериите ((ЕС) 2023/1542) и/или Вашето национално законодателство, прилагащо тези Директиви.
Ако под показания горе символ е отпечатан символ за химически елемент, съгласно разпоредбите на Регламент за батерии, този втори символ означава наличието на тежък метал (Pb = олово) в батерията в концентрация над указаната граница за съответния елемент в Регламент.
Този продукт трябва да бъде предаден в предназначен за целта пункт за събиране, например на база размяна, когато купувате нов подобен продукт, или в одобрен събирателен пункт за рециклиране на излязло от употреба електрическо и електронно оборудване (ИУЕЕО), батерии.
Неправилното третиране на този тип отпадъци може да доведе до евентуални отрицателни последствия за околната среда и човешкото здраве поради потенциално опасните вещества, които обикновено са свързани с ЕЕО.
В същото време Вашето съдействие за правилното изхвърляне на този продукт ще допринесе за ефективното използване на природните ресурси.
За повече информация относно това къде можете да предадете за рециклиране този продукт, моля свържете се с местните власти, с органа, отговорен за отпадъците, с одобрената система за ИУЕЕО, с Вашата местна служба за битови отпадъци или посетете.
www.canon-europe.com/sustainability/approach/

Doar pentru Uniunea Europeană şi EEA (Norvegia, Islanda şi Liechtenstein)



Aceste simboluri indică faptul că acest produs nu trebuie aruncat împreună cu deşeurile menajere, în conformitate cu Directiva DEEE (2012/19/UE), Regulamentul ((UE) 2023/1542) şi/sau legile dvs. naţionale ce implementează această Directivă şi Regulament.
Dacă un simbol chimic este imprimat sub simbolul de mai sus, în conformitate cu Regulamentul referitor la baterii, acest simbol indică prezenţa în baterie a unui metal greu (Pb = Plumb) într-o concentraţie mai mare decât pragul admis specificat în Regulamentul referitor la baterii.
Acest produs trebuie înmânat punctului de colectare adecvat, ex: printr-un schimb autorizat unu la unu atunci când cumpăraţi un produs nou similar sau la un loc de colectare autorizat pentru reciclarea reziduurilor de echipament electric şi electronic (EEE) şi baterii. Administrarea neadecvată a acestui tip de deşeuri, ar putea avea un impact asupra mediului şi asupra sănătăţii umane datorită substanţelor cu potenţial de risc care sunt în general asociate cu EEE.
Cooperarea dvs. în direcţia reciclării corecte a acestui produs va contribui la o utilizare eficientă a resurselor naturale.
Pentru mai multe informaţii despre reciclarea acestui produs, vă rugăm să contactaţi biroul dvs. local, autorităţile responsabile cu deşeurile, schema aprobată sau serviciul dvs. responsabil cu deşeurile

menajere sau vizitaţi-ne la.
www.canon-europe.com/sustainability/approach/.

Samo za Europsku uniju i EEA (Norveška, Island i Lihtenštajn)



Oznaka pokazuje da se ovaj proizvod ne smije odlagati s komunalnim i ostalim vrstama otpada, u skladu s direktivom WEEE (2012/19/EC), Uredbom o baterijama ((EU) 2023/1542) i/ili nacionalnim zakonodavstvom koje provodi te Direktive i Uredbe.
Ako je ispod prethodno prikazane oznake otisnut kemijski simbol, u skladu s Uredbom o baterijama, to znači da se u ovoj bateriji nalazi teški metal (Pb = olovo) i da je njegova koncentracija iznad razine propisane u Uredbi o baterijama.
Ovaj bi proizvod trebalo predati ovlaštenom skupljaču EE otpada ili prodavatelju koji je dužan preuzeti otpadni proizvod po sistemu jedan za jedan, ako isti odgovara vrsti te je obavljao primarne funkcije kao i isporučena EE oprema. Otpadne baterije predaju se ovlaštenom skupljaču otpadnih baterija ili prodavatelju bez naknade i obveze kupnje za krajnjeg korisnika. Neodgovarajuće rukovanje ovom vrstom otpada može utjecati na okoliš i ljudsko zdravlje zbog potencijalno opasnih supstanci koje se najčešće nalaze na takvim mjestima.
Vaša suradnja u pravilnom zbrinjavanju ovog proizvoda pridonijet će djelotvornom iskorištavanju prirodnih resursa. Dodatne informacije o recikliranju ovog proizvoda zatražite od svog lokalnog gradskog ureda, službe za zbrinjavanje otpada, odobrenog programa ili komunalne službe za uklanjanje otpada ili pak na stranicama
www.canon-europe.com/sustainability/approach/

Handling Precautions

- When Repairing, Lending, or Disposing of the Printer
- Legal Restrictions on Printing
- Ink Tips

When Repairing, Lending, or Disposing of the Printer

If you have entered personal data, passwords and/or other security settings on the printer, such information may be stored in the printer.

To keep your personal information safe, please be sure to reset all printer settings when sending the printer for repair, lending or transferring the printer to another person, or disposing of the printer.

➡ Reset settings

Legal Restrictions on Printing

Printing or modifying printed copies of the following may be punishable under law.

This list is non-exhaustive. When in doubt, check with a local legal representative.

- Paper money
- Money orders
- Certificates of deposit
- Postage stamps (canceled or uncanceled)
- Identification badges or insignia
- Selective service or draft papers
- Checks or drafts issued by governmental agencies
- Motor vehicle licenses and certificates of title
- Traveler's checks
- Food stamps
- Passports
- Immigration papers
- Internal revenue stamps (canceled or uncanceled)
- Bonds or other certificates of indebtedness
- Stock certificates
- Copyrighted works or works of art, without the owner's consent

Ink Tips

Ink is used for various purposes other than printing.

Ink may be used for purposes other than printing.

When you use the Canon printer for the first time after you install the bundled ink tanks, the printer consumes a small amount of ink in the amount to enable printing by filling the nozzles of the Print Head with ink. For this reason, the number of sheets that can be printed with the first ink tanks is fewer than the succeeding ink tanks.

The printing costs described in the brochures or websites are based on the consumption data from not the first ink tank /ink cartridge but the succeeding ink tank /ink cartridge.

Ink is sometimes used to maintain the optimal printing quality.

To keep printer's performance, Canon printer performs cleaning automatically according to its condition. When the printer performs cleaning, a small amount of ink is consumed. In this case, all colors of ink may be consumed.

[Cleaning function]

The cleaning function helps the printer to suck air bubbles or ink itself from the nozzle and thus prevents print quality degradation or nozzle clogging.

Note

- Ink is consumed for print preparation operation that is periodically and automatically performed to keep printer's performance and for print head cleaning. Therefore, unused ink for printing may also be consumed.

Black-and-white printing uses color ink.

Black-and-white printing may use ink other than black ink depending on the type of printing paper or the settings of the printer driver. So, color ink is consumed even when printing in black-and-white.

Note

- The printer uses pigment ink. Due to the nature of the pigment ink, the ink on the printed surface may be removed when being rubbed or scratched.

Specifications

- **Specifications**
- **Print Area**
  - Printing Area
  - Standard Sizes
  - Sizes for 0.98 inch (25 mm) Margin Paper
  - Printable Discs

Specifications

Important

- The following values may vary depending on the operating environment.

General Specifications

Power supply	100-240 V AC (50/60 Hz) (The supplied power cord is only for the country or region you purchased.)
Power consumption	**When printing (USB connection):** Approx. 16 W **Standby (USB connection):** Approx. 1.0 W *1 **Standby (all ports connected):** Approx. 2.3 W *1 **When power is off:** Approx. 0.05 W *2 *1 The wait time for standby cannot be changed. *2 The printer uses a trace amount of power even when turned off. To stop all power consumption, turn off the printer and unplug the power cord.
Operating environment	**Temperature:** 41 to 95 °F (5 to 35 °C) **Humidity:** 10 to 90 % RH (no condensation) * The performance of the printer may be reduced under certain temperature and humidity conditions. Recommended conditions: **Temperature:** 59 to 86 °F (15 to 30 °C) **Humidity:** 10 to 80 % RH (no condensation) * For the temperature and humidity conditions of papers such as photo paper, refer to the paper's packaging or the supplied instructions.
Storage environment	**Temperature:** 32 to 104 °F (0 to 40 °C) **Humidity:** 5 to 95 % RH (no condensation)
Dimensions (W x D x H)	Approx. 25.2 x 15 x 7.9 in. (Approx. 639 x 379 x 200 mm) * With the trays retracted.
Weight	Approx. 31.7 lb (Approx. 14.4 kg) * With the Print Head and ink tanks installed.

Interface

USB and the network can be used at the same time.

You cannot use Wi-Fi and wired LAN at the same time.

USB	Hi-Speed USB *

	* To use Hi-Speed USB, your computer must support Hi-Speed USB. Additionally, the Hi-Speed USB interface is completely backward compatible with USB 1.1, so the printer can be connected even if the computer interface is USB 1.1.
LAN	**Wired LAN:** IEEE802.3u (100BASE-TX) / IEEE802.3 (10BASE-T) **Wi-Fi:** IEEE802.11n / IEEE802.11g / IEEE802.11b / IEEE802.11a / IEEE802.11ac

Network Specifications

Communication protocol	SNMP, HTTP, TCP/IP (IPv4/IPv6)
Wired LAN specifications	**Supported Standards:** IEEE802.3u (100BASE-TX) / IEEE802.3 (10BASE-T) **Transmission speed:** 10 Mbps / 100 Mbps (automatically selected) **Security:** IEEE802.1X (EAP-TLS/EAP-TTLS/PEAP)
Wi-Fi specifications	**Supported Standards:** IEEE802.11n / IEEE802.11g / IEEE802.11b / IEEE802.11a / IEEE802.11ac **Frequency bandwidth:** 2.4 GHz / 5 GHz *1 **Channels:** 2.4 GHz: 1-11 or 1-13 *1 5 GHz: W52, W53, W56, W58 *1 *1 Frequency bandwidth and available channels differ depending on country or region. **Effective range:** Indoors 164 feet/50 m *2 *2 Varies according to environmental conditions. **Security:** WPA-PSK (AES) WPA2-PSK (AES) WPA3-SAE (AES) WPA-EAP (AES) *3 WPA2-EAP (AES) *3 WPA3-EAP (AES) *3 *3 Supports IEEE802.1X (EAP-TLS / EAP-TTLS / PEAP) **Setup:** WPS (push button method/PIN code method) Easy wireless connect

Paper

For the paper types, size, and weight/thickness that are supported by the printer, see Media Types You Can Use.

For the area that can be printed, see Print Area.

Operating Conditions

If operating conditions of the operating system are high, follow those.

Windows

Compatible Operating System	Windows 11, Windows 10, Windows 8.1, Windows 7 SP1 Note: Operation can only be guaranteed on a PC with pre-installed operating system. .NET Framework is required. Printer driver and IJ Printer Assistant Tool support the following OS: Windows Server 2008 R2 SP1, Windows Server 2012 R2, Windows Server 2016, Windows Server 2019 and Windows Server 2022
Amount of hard disk space required for installing the driver	1.5 GB or more The necessary amount of hard disk space may be changed without notice.

macOS

Compatible Operating System	macOS Big Sur 11.7.10 - macOS Sonoma 14
Amount of hard disk space required for installing the driver	1.5 GB or more The necessary amount of hard disk space may be changed without notice.

Other Supported OS

iOS, iPadOS, Android, Chrome OS Some functions may not be available with the supported OS.

- An Internet connection is required to use the Online Manual.
- To install the software while using Windows, you must have a CD-ROM drive or a network connection.
- To install the software while using macOS, you must have a network connection.

Print Area

- Printing Area
- Standard Sizes
- Sizes for 0.98 inch (25 mm) Margin Paper
- Printable Discs

Printing Area

To maintain print quality, the printer leaves a margin around the edges of paper. The printable area is inside this margin.

Recommended printing area : Canon recommends that you print within this area.

Printable area : The area where it is possible to print.

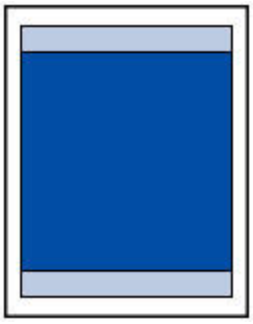

Note

- By selecting Borderless Printing option, you can make prints with no margins.
- When performing Borderless Printing, slight cropping may occur at the edges since the printed image is enlarged to fill the whole page.
- To specify the amount of image that extends off the paper, select **Extension for borderless printing** in **Advanced paper settings**.

  ➡ Paper-related settings
- For Borderless Printing, use the following paper:
  - **Photo Paper Pro Platinum** <PT-101>
  - **Photo Paper Plus Glossy II** <PP-201/PP-208/PP-301>
  - **Photo Paper Pro Luster** <LU-101>
  - **Photo Paper Plus Semi-gloss** <SG-201>
  - **Matte Photo Paper** <MP-101>*1
  - **Photo Paper Pro Premium Matte** <PM-101>*1
  - **Premium Fine Art Smooth** <FA-SM1>*1
  - **Premium Fine Art Rough** <FA-RG1>*1
  - Greeting Card
  - Card Stock

  *1 Borderless Printing is disabled depending on print settings. To enable Borderless Printing, remove margin restrictions.

  ➡ Print Options dialog box (Windows)

  ➡ Advanced Paper Settings (macOS)

  Performing Borderless Printing on any other type of paper may substantially reduce printing quality and/or result in printouts with altered color hues.

- Borderless Printing is not available for 9"x13"(23x33cm) size paper or plain paper.
- Depending on the type of paper, Borderless Printing may reduce the print quality at the top and bottom edges of the paper or cause these parts to become smudged.

Standard Sizes

Size	Printable Area (width x height)
Letter	8.00 x 10.69 in. (203.2 x 271.4 mm)
Legal	8.00 x 13.69 in. (203.2 x 347.6 mm)
11" x 17" (28 x 43 cm)	10.73 x 16.69 in. (272.6 x 423.8 mm)
A5	5.56 x 7.95 in. (141.2 x 202.0 mm)
A4	8.00 x 11.38 in. (203.2 x 289.0 mm)
A3	11.43 x 16.22 in. (290.2 x 412.0 mm)
A3+	12.69 x 18.70 in. (322.2 x 475.0 mm)
B5	6.90 x 9.80 in. (175.2 x 249.0 mm)
B4	9.85 x 14.02 in. (250.2 x 356.0 mm)
KG/4"x6"(10x15)	3.73 x 5.69 in. (94.8 x 144.4 mm)
5" x 7" (13 x 18 cm)	4.73 x 6.69 in. (120.2 x 169.8 mm)
7" x 10" (18 x 25 cm)	6.73 x 9.69 in. (171.0 x 246.0 mm)
9"x13"(23x33cm)	8.73 x 12.69 in. (221.8 x 322.2 mm)
11"x14"	10.73 x 13.69 in. (272.6 x 347.6 mm)
13"x19" (Super B)	12.73 x 18.69 in. (323.4 x 474.6 mm)
8" x 10" (20 x 25 cm)	7.73 x 9.69 in. (196.4 x 246.0 mm)
10" x 12" (25 x 30 cm)	9.73 x 11.69 in. (247.2 x 296.8 mm)
8.27 x 23.39 in. (210 x 594 mm)	8.00 x 23.07 in. (203.2 x 586.0 mm)
Square 5" x 5" 13 x 13 cm	4.53 x 4.53 in. (115.0 x 115.0 mm)
12" x 12" (30 x 30 cm)	11.73 x 11.68 in. (298.0 x 296.8 mm)
Hagaki	3.67 x 5.51 in. (93.2 x 140.0 mm)
Hagaki 2	7.61 x 5.51 in. (193.2 x 140.0 mm)

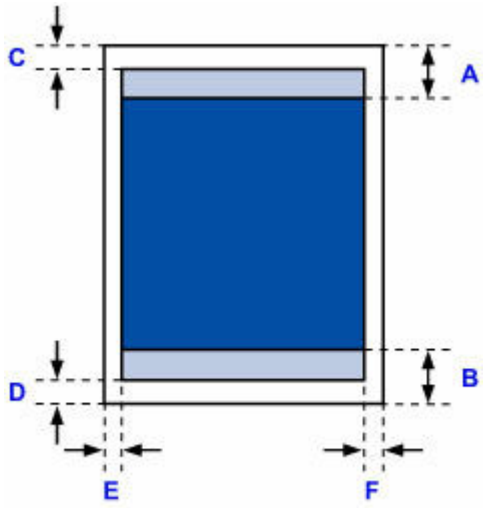

Recommended printing area

A: 1.34 in. (34.0 mm)
B: 1.46 in. (37.0 mm)

Printable area

Letter, Legal

C: 0.12 in. (3.0 mm)
D: 0.20 in. (5.0 mm)
E: 0.25 in. (6.4 mm)
F: 0.25 in. (6.3 mm)

Square 5" x 5" 13 x 13 cm

C: 0.24 in. (6.0 mm)
D: 0.24 in. (6.0 mm)
E: 0.24 in. (6.0 mm)
F: 0.24 in. (6.0 mm)

Other than Letter, Legal or Square 5" x 5" 13 x 13 cm

C: 0.12 in. (3.0 mm)
D: 0.20 in. (5.0 mm)
E: 0.13 in. (3.4 mm)
F: 0.13 in. (3.4 mm)

Sizes for 0.98 inch (25 mm) Margin Paper

When art paper with 0.98 in. (25 mm) margins is selected, the printer is restricted from printing in the top and bottom 0.98 in. (25 mm) of the paper. We therefore recommend checking the printing area in the preview screen before printing.

If the print head is rubbing against the top and bottom edges of the paper, causing smudging, you can avoid this by using 0.98 in. (25 mm) margin paper.

When you are using the following paper, the printer prints to paper sizes with 0.98 in. (25 mm) margins depending on print settings. To print to other page sizes, remove restrictions on margins.

- **Matte Photo Paper** <MP-101>
- **Photo Paper Pro Premium Matte** <PM-101>
- **Premium Fine Art Smooth** <FA-SM1>
- **Premium Fine Art Rough** <FA-RG1>

➡ Print Options dialog box (Windows)
➡ Advanced Paper Settings (macOS)

Size	Printable Area (width x height)
Letter (0.98 in. (25 mm) margin)	8.00 x 9.03 in. (203.2 x 229.4 mm)
11" x 17" (28 x 43 cm) (0.98 in. (25 mm) margin)	10.73 x 15.03 in. (272.6 x 381.8 mm)
A4 (0.98 in. (25 mm) margin)	8.00 x 9.72 in. (203.2 x 247.0 mm)
A3 (0.98 in. (25 mm) margin)	11.43 x 14.57 in. (290.2 x 370.0 mm)
A3+ (0.98 in. (25 mm) margin)	12.69 x 17.05 in. (322.2 x 433.0 mm)
8.27 x 23.39 in. (210 x 594 mm) (0.98 in. (25 mm) margin)	8.00 x 21.42 in. (203.2 x 544.0 mm)

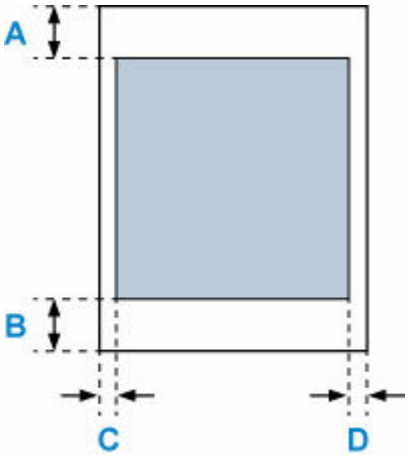

Printable area

Letter

A: 0.98 in. (25.0 mm)
B: 0.98 in. (25.0 mm)
C: 0.25 in. (6.4 mm)
D: 0.25 in. (6.3 mm)

Other than Letter

A: 0.98 in. (25.0 mm)
B: 0.98 in. (25.0 mm)
C: 0.13 in. (3.4 mm)
D: 0.13 in. (3.4 mm)

Printable Discs

The printing area of the printable disc is from 0.67 in. (17 mm) of the internal diameter to 0.04 in. (1 mm) from the external diameter of the printing surface.

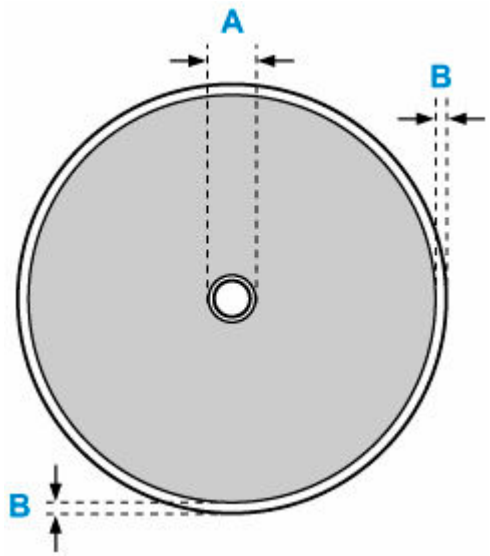

Printable area

A: 0.67 in. (17.0 mm)

B: 0.04 in. (1.0 mm)

Appendix

- Online Manual
- Symbols Used in This Document
- Trademarks
- Licenses

Online Manual

Models used in illustrations and videos in this manual, may differ from your model.

Screenshots in This Manual

For Windows:

The screenshots used in this manual are taken with Windows 10.

For macOS:

The screenshots used in this manual are taken with macOS Ventura 13.